Technical Disclosure Commons

Defensive Publications Series

November 2020

EMC COMPONENT OPTIMIZATION

HP INC

EMC component optimization

Abstract

This disclosure is to design a decoupling capacitor topology of IC's in PCB layout to effectively resolve EMI problem with minimum number of capacitors. The proposed decoupling capacitor topology is to simulate the twisted wire principle which the common mode ground noise is cancelled at ground when 2 current loops are in opposite direction.
Determine the location of decoupling cap, we can control the current direction of the IC's since the decoupling cap would be the power source to the IC's. By controlling the current direction of 2 IC's with opposite direction the common mode ground noise would be cancelled at ground.
The proposed topology is to let decoupling capacitor located between the 2 IC's. The current flow for the 2 IC's would start from the decoupling cap and end at the ground of IC then back to the ground pin of cap. Current flow direction to first IC would start from the right and the current flow direction to the other IC would start from the left. With the opposite current direction, the magnetic flux of both of IC's would have been cancelled each other at ground.

Problems Solved

- The highspeed IC's usually generate strong EMI when logic gates switching inside the IC's.
- The old practice with multiple different value of capacitors would exist anti-peaks drawback from the impedance point of view which EMI problem is hardly to be handled.
- The proposed capacitor topology would effectively resolve EMI problem by having opposite current direction between 2 IC's which the common mode noise would have been cancelled each other at ground.

Prior Art

There is no finding from prior art.

Product Drawing 1: Twisted wire is EMI effective due to opposite current direction between nodes

PCB layout placement of decoupling capacitor of IC's follows the twisted wire principle. The decoupling capacitor location would determine the current direction of the IC since the current flow would start from the decoupling capacitor.

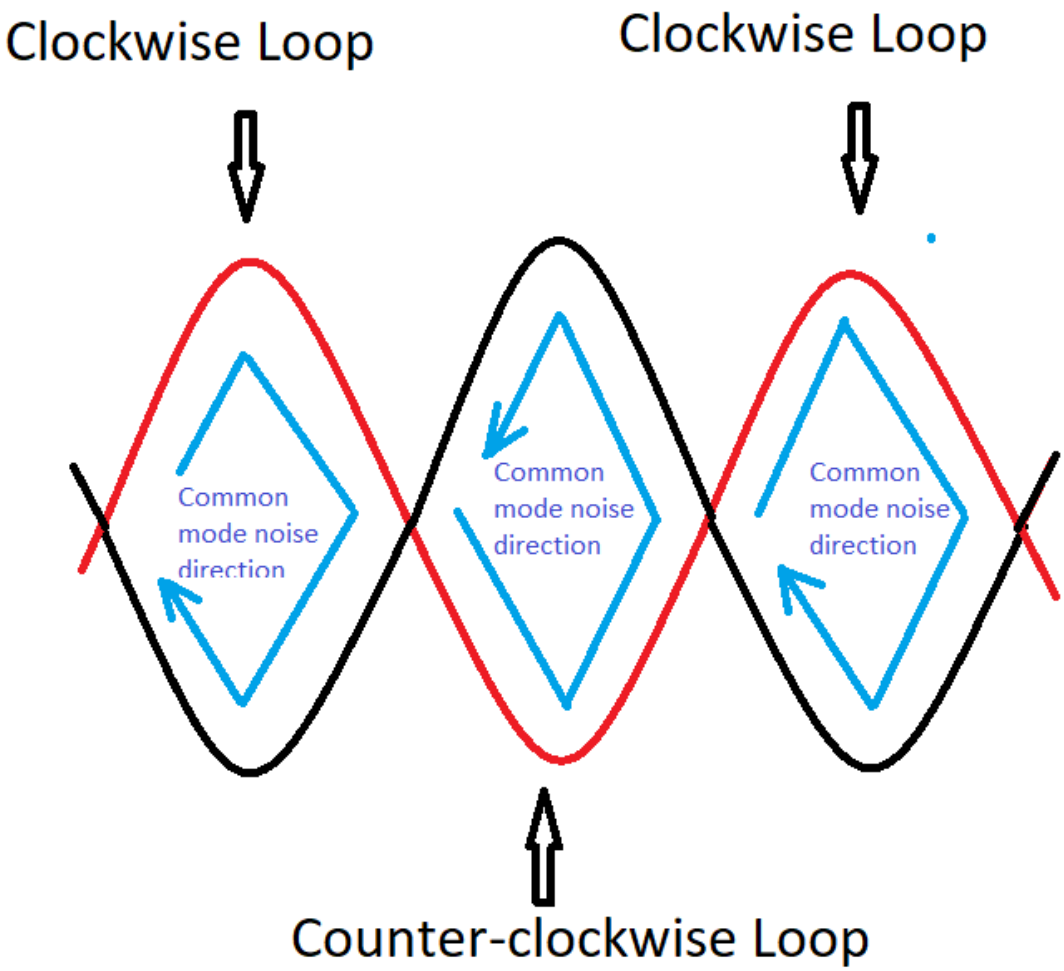

Product Drawing 2: Proposed decoupling capacitor topology #1

The proposed topology #1 is to have the decoupling capacitor located between 2 IC's so that the current direction is opposite between 2 IC's. The common mode ground noise is cancelled.

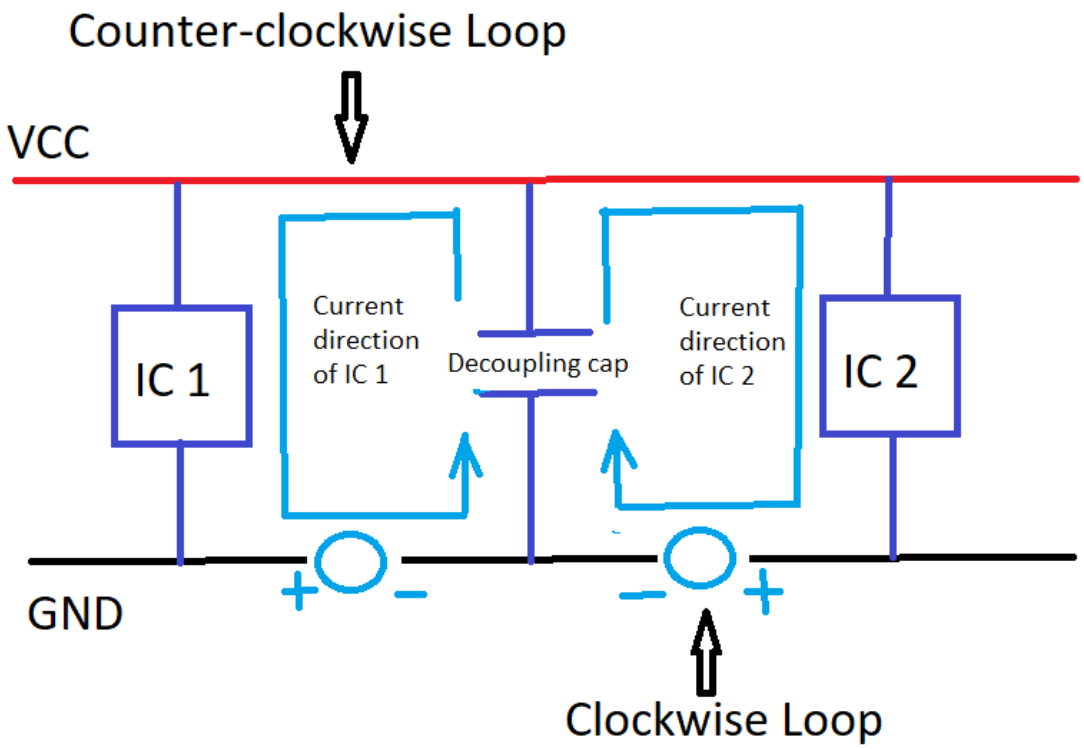

Product Drawing 3: Proposed decoupling capacitor topology #2

Proposed topology #2 is an extension from topology #1. The common mode ground noise is cancelled at ground.

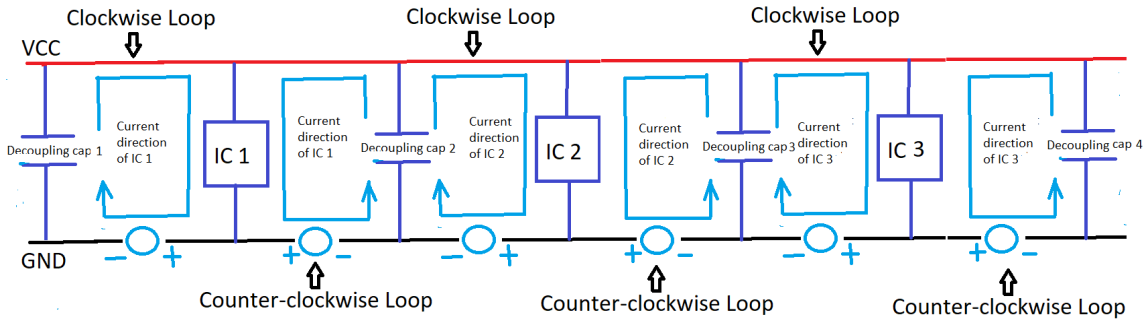

Advantages

- Solving EMI problem with twisted wire principle the magnetic flux cancelled each other with opposite current direction.
- Reduce the number of decoupling capacitors since the common mode noise is cancelled at ground.
- Layout placement effectively resolve EMI with proposed topology.
- Determine decoupling capacitor location would control the current flow direction for an IC. Let the current flow opposite for 2 current loops of 2 IC's to cancel magnetic flux each other.

Disclosed by Fei-Ming Chang, Jerry Lin, Jim Wang and Ting-Yang Tsai, HP Inc.