MARCS Institute for Brain, Behaviour & Development

Towards Electrodeless EMG linear envelope signal recording for myo-activated prostheses control

Nawadita Parajuli

A THESIS SUBMITTED IN FULFILMENT FOR THE DEGREE OF MASTER OF PHILOSOPHY

Supervisors:

Dr Gaetano D. Gargiulo

Dr Upul Gunawardana

Dr Ganesh Naik

External supervisor:

Dr Tara Hamilton

May 2020

Acknowledgement

Foremost, I would like to express my sincere gratitude to my supervisors' **Dr Gaetano D. Gargiulo,** Associate professor, SCEM, Western Sydney University, **Dr Upul Gunawardana,** Senior Lecturer, SCEM, Western Sydney University**, Dr Ganesh Naik** Researcher, MARCS, Western Sydney University and **Dr Tara J. Hamilton,** Associate Professor, University of Technology Sydney for the continuous supportive guidance for my MPhil study and research, and also for their patience, motivation, enthusiasm, and immense knowledge.

I would also like to extend my profound gratitude to **Mr. Diego Felipe Ulloa Gutierrez and Mrs Neethu Sreenivasan** for their timely help and support.

Last but not the least I would like to thank my family and friends for their constant support. Especially, this thesis would not be possible without my husband who supported me financially and emotionally, encouraged me during my tough times in the completion of this thesis process.

[redacted]

Table of Contents

List of Figures

List of Tables

Abbreviations

ALFN	Abe lan fuzzy network
ANFIS	Adaptive neuro-fuzzy interface system
ANN	Artificial neural network
AR	Auto regressive
CER	Classification error rate
CSF	Common spatial pattern
CUSUM	Cummulative sum
CWT	Continuous wavelet transform
DFT	Discrete fourier transform
DOF	Degree of freedom
DSP	Digital signal processing
DR	Dimensionality reduction
EASRC	Extreme learning machine with adaptive sparse representation classification
ECog	Electrocorticogram
EEG	Electroencephalogram
EHW	Evolvable hardware
EMG	Electromyogram
EMG-LE	EMG linear envelope
ERB	Electro resistive band
FCM	Fuzzy C means
FCNN	Fuzzy clustering neural network
FD	Frequency domain
FDF	Frequency domain feature
FP	Feature projection
FSR	Force sensitive resistor
HD	High density
HMM	Hidden Markov model
IAV	Integral absolute value
ICA	Independent component analysis
IM	Inertial measurement
IMES	Implantable myoelectric sensor
IMU	Inertial measurement unit
KFD	Kernel fisher discriminant
KNN	K-nearest neighbor
LDA	Linear discriminate analysis
LTFR	Linear time frequency representations
MA	Moving average
MAV	Mean absolute value
MDA	Multiple discriminant analysis
MIDI	Musical instrument digital interface
MLP	Multi-layer perceptron
MMG	Mechanomyogram
MMLD	Maximum likelihood distance
MRV	Mean relative value
MV	Majority Voting
NBC	Naive Bayes classifier
NN	Neural network
OFNDA	Orthogonal fuzzy neighborhood discriminative approach
PCA	Principal component analysis
PNS	Peripheral nervous system
PR	Pattern recognition

PSD	Power spectral density
QTFR	Quadratic time frequency representations
RBF	Radial Basis function
RF	Random forest
RMS	Root mean square
SD	Standard deviation
sEMG	Surface EMG
SF	Sample frequency
SOM	Self organizing maps
SPSE	Steady posture and steady EMG
SRC	Sparse representation classification
SSC	Slope sign change
STFT	Short time Fourier transform
SVDD	Support vector data description
SVM	Support vector machine
TAC	Target achievement control
TD	Time domain
TDF	Time domain features
TD-PSD	TD-Power spectral descriptors
TFDF	Time frequency domain features
TKE	Teager-Kaiser energy operator
TMR	Targeted muscle re-innervation
TSD	Temporal- spatial descriptor
TSVM	Twin SVM
ULAs	Upper limb amputees
ULP	Upper limb prosthesis
VD-MOM	Vuskovic and Du-MOM
WAMP	Willison amplitude
WL	Waveform length
WPT	Wavelet packet transforms
WT	Wavelet transform
ZC	Zero crossing
ZMP	Zero moment point

Abstract

After amputation, the residual muscles of the limb may function in a normal way, enabling the electromyogram (EMG) signals recorded from them to be used to drive a replacement limb. These replacement limbs are called myoelectric prosthesis. The prostheses that use EMG have always been the first choice for both clinicians and engineers. Unfortunately, due to the many drawbacks of EMG (e.g. skin preparation, electromagnetic interferences, high sample rate, etc.); researchers have aspired to find suitable alternatives. One proposes the dry-contact, low-cost sensor based on a force-sensitive resistor (FSR) as a valid alternative which instead of detecting electrical events, detects mechanical events of muscle. FSR sensor is placed on the skin through a hard, circular base to sense the muscle contraction and to acquire the signal. Similarly, to reduce the output drift (resistance) caused by FSR edges (creep) and to maintain the FSR sensitivity over a wide input force range, signal conditioning (Voltage output proportional to force) is implemented. This FSR signal acquired using FSR sensor can be used directly to replace the EMG linear envelope (an important control signal in prosthetics applications). To find the best FSR position(s) to replace a single EMG lead, the simultaneous recording of EMG and FSR output is performed. Three FSRs are placed directly over the EMG electrodes, in the middle of the targeted muscle and then the individual (FSR1, FSR2 and FSR3) and combination of FSR (e.g. FSR1+FSR2, FSR2-FSR3) is evaluated. The experiment is performed on a small sample of five volunteer subjects. The result shows a high correlation (up to 0.94) between FSR output and EMG linear envelope. Consequently, the usage of the best FSR sensor position shows the ability of electrode less FSR-LE to proportionally control the prosthesis (3-D claw). Furthermore, FSR can be used to develop a universal programmable muscle signal sensor that can be suitable to control the myo-activated prosthesis

Keywords: Force sensitive resistor (FSR), Surface Electromyography (sEMG), EMG linear envelope (EMG-LE)

1. Introduction

Upper limb amputation is a condition that significantly confines the amputees from performing their day to day activities. A myoelectric (EMG) prosthesis, using signals from residual stump muscles is aimed at restoring the function of such lost limbs seamlessly. Electromyography (EMG) is still the first choice for the measurement of muscular contraction in myo-activated prosthesis control, medical applications and engineering fields [1]. Unfortunately, the acquisition and use of such myosignals are cumbersome and complicated. There are two different methods of obtaining information about muscle activity. They are intramuscular EMG (invasive electrode) and surface EMG (non-invasive electrodes) [2] . Surface electromyography (sEMG) is one of the most widely used techniques. Obtaining the sEMG signal requires skin preparation and proper placement of electrodes. sEMG is very sensitive to electromagnetic interferences. In order to acquire information on muscle contraction level, the raw EMG signal requires to be processed. The EMG linear envelope (EMG-LE) and RMS value provide a good estimation of muscle employed force [3]. EMG RMS requires more computational power and is hardware expensive than EMG-LE. EMG RMS is commonly used in medical diagnosis while EMG-LE provides a minimal control signal for the prosthesis. EMG-LE is usually computed by rectifying (full wave) and low-pass filtering the raw EMG signal. This processing can be performed either in hardware or in software. Once EMG signal is acquired, it usually requires heavy computational power to turn it into a user control signal. Its conversion to a practical prosthesis solution is still being challenged by various factors particularly those related to the fact that each amputee has different mobility, muscle contraction forces, limb positional variations, and electrode placements. Thus, a solution that can adapt or otherwise tailor itself to each individual is required for maximum utility across amputees. Therefore, modified machine learning schemes for pattern recognition have the potential to significantly reduce the factors (movement of users and contraction of the muscle) affecting the traditional electromyography (EMG)-pattern recognition methods. Although recent developments of intelligent pattern recognition techniques could discriminate multiple degrees of freedom with high-level accuracy, their efficiency level was less accessible and revealed in real-world (amputee) applications.

On another side, since EMG quality is linked to the effectiveness of the electrodes and due to the necessary additional process required to extract the control signal from it, researchers are looking for alternative sensors to monitor muscle contractions [4]. Recently, an FSR-based sensor was proposed for muscle contraction measurement [5]. This sensor measures the mechanical force elicited by the muscle during contraction. It does not require any electrical contact with the skin (enhancing patients' electrical safety) and it is much less sensitive to electromagnetic interferences. The signal provided by the FSR sensor does not require any further processing to extract information about muscle contraction level and, therefore, it requires a considerably lower sampling frequency [5]. This makes it suitable for implementations on systems with less computational power.

This thesis paper mainly presents the challenges for the real-time EMG based pattern recognition control for hand prostheses, FSR based sensors to monitor muscle contraction and comparison with standard surface electromyography and future research plan for FSR sensor-based pattern recognition control together for the real-time usability of prosthesis. Moreover, the paper is organised as follows: Chapter I of this paper explains the mechanism of muscle contraction, mechanism of human upper limb and the sensor used on myoelectric prosthesis control. This Chapter also explains the main objectives of this research and the research hypothesis. In Chapter II background on Real-time EMG based pattern recognition control for hand prostheses, the background of FSR in prosthesis and research gap and future implementation are presented. Chapter III describes the methodology (FSR sensor design, sensor conditioning, and signal acquisition and data processing) carried out and components used in research. Chapter IV discusses the result. Chapter V concludes the paper with future directions.

1.1 General Background

The upper limb is a significant part of the human body and partial or complete loss of which can have a significant effect on a person's performing activity of daily living (ADL). The human upper limb is mainly divided into three sections the hand, forearm, and arm. For the movement of each section, coordinate the relation of the nervous system, musculoskeletal systems, and its surroundings are mandatory. To perform different activities (daily), coordination of different joints (shoulder, elbow, wrist, and finger joint) is essential, including a broad range of motions with several degrees of freedom. These coordinated movements are always redundant and can be beneficial to perform complex tasks. When it comes to an artificial hand, all such control features of the normal hand should extensively match so that the user can perform their daily needs in a modified and effective way. The coordinated control of the biological hand is quite complex, making it highly difficult to replicate exactly in any prosthetic hand. A typical prosthetic hand involves three main connected parts: an input signal acquisition unit, processing, and control unit, and an end effector. Almost all high performing artificial hands (or prosthesis) are using surface electromyography signals (sEMG or myosignals), nowadays, for controlling their end effectors. Surface electromyography records the muscle movements electrically from the surface of muscle cells when they are electrically or neurologically activated [6]. The amplitude of sEMG signals ranges from 0 to 10mV (peak to peak) / 0 to 1.5 mV (RMS) with dominant energy in the 20Hz-450Hz band [7]. Moreover, the acquisition of the sEMG signal requires proper skin preparation, and EMG electrodes should be placed after confirming the target muscles (from which the EMG signal comparable to predefined limb movement can be produced). Therefore, with the technological and miniaturization of sensors, dry electrodes that work as transducers for muscular inputs have replaced traditional gel EMG electrodes and have improved performance [8]. On a usability level, sometimes, muscle fatigue can happen due to the positioning of these dry electrodes on a single target muscle [9]. Recently, a modular scheme was

developed as a solution which uses the combination of several electrodes and channels for accurate quantification [10], [11]. An extension to this is that these electrodes are replaced with transducers, like force and resistive sensors, which use only a single channel acquisition method with fewer disturbances [12], [13].

In general, myoelectric hands have evolved a lot to overcome the traditional disadvantages of acquiring myosignals to satisfy the needs of all levels of amputees. However, the basic control of the majority of those myo-activated limbs has followed the same operating principles (muscle contractions) for more than half of a century [14], [15]. These devices use two types of technical control: pattern recognition (PR) based control and non-pattern recognition-based control [16]. The conventional non-pattern recognition method is commonly used and limited to the proportional control (on/off control). EMG-PR techniques have been developed to increase the dexterity of myoelectric prosthetic devices, and to overcome the limitations of conventional proportional control. EMG-PR operates by extracting multiple features from EMG signals rather than entirely relying on EMG amplitude [17] (as EMG amplitude is slow, cumbersome, and difficult for users to control their residual muscles movement). A well-developed artificial upper limb design comprises of trajectories of a limb and their associated movement patterns. To delineate this, a control algorithm requires parameters such as kinematics and models of joints [18], motion, and activities range [16]. EMG-based pattern recognition is working on the hypothesis that EMG patterns contain much information on intended movements. Once the EMG patterns are identified for intended movements using pattern classification, the prosthesis controller will receive the command to implement the movement. Thus, EMG-PR approach may allow users to control their myoelectric prosthesis more effortlessly with a broad range of control.

The use of artificial hands instead of biological hands with the same degree of dexterity [19] and complexity is a challenging task. However, pattern recognition (PR) technology has played an important role in controlling myoelectric prosthetic devices for over 20 years [20], [21], [22]. Pattern recognition technology provides more natural control, which is easier to learn by user and machine. It also provides independent control of multiple DOFs using simultaneous, sequential, or semi-sequential control, as well as bringing the prosthesis closer to natural arm functions [23]. By applying proper PR based methods and signal processing techniques in combination with machine learning algorithms, an amputee's limb movement can be accurately decoded and used to control a prosthetic device [24], [16]. EMG based PR methods involve various approaches, such as pre-processing, segmentation of data, feature extraction, feature classification, and post-processing[25].

All these approaches related to myoelectric pattern recognition in one way or another can be helpful, but these methods still need further real-time evaluations for their validity [11]. Much research has been done on the myoelectric prosthesis; nevertheless, some of the areas in the field need to be improved: i) control of multiple degrees of freedoms (DOFs) naturally and intuitively, ii) two-way communication with the brain (peripheral nervous system (PNS)) and iii) fast learning.

Moreover, several advanced pattern recognition techniques have been proposed without any real-world user applications [26], [27]. A large portion of pattern recognition techniques described in the literature is still being applied in clinical settings. Besides, the performance of these algorithms is affected greatly by several factors, including the positioning of electrodes, the fatigue of the muscle, arm position, surface EMG cross-talk, and muscle contraction. This thesis paper is mainly focused on state of art EMG electrodes, its drawbacks and the alternative for EMG electrodes to overcome the drawbacks of EMG and to improve the myo-activated prosthesis performance level while maintaining quantifiable viability.

1.1.1 Mechanism of Muscle contraction

Muscle contraction is one of the important functions of the human body. It is not limited to the movement only but also responsible for posture, joint stability, and heat productions. During muscle contraction, muscle controlled by the nervous system generates the electrical signals [28] which are recorded by electromyogram (EMG).

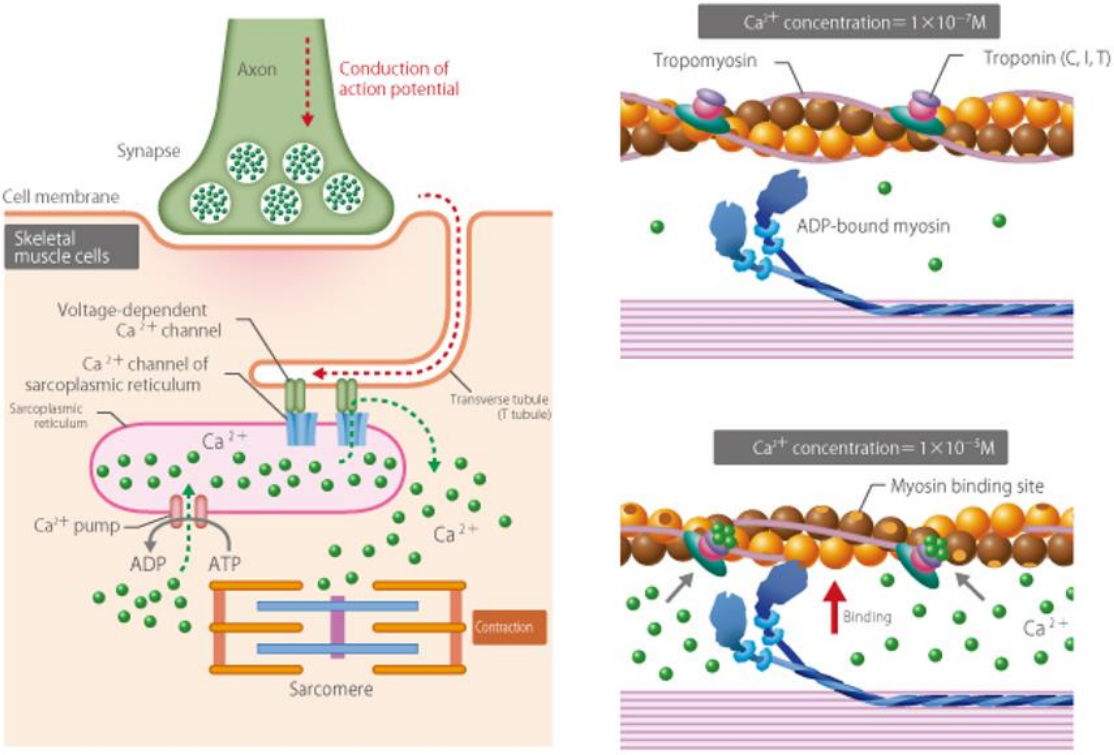

A B

Figure 1 (A) Showing changes in muscle cells due to transmission of excitation from nerve cell (B) Mechanism showing role of tropomyosin and troponin for muscle contraction [29]

Transmission of the excitation from the nerve cells via synapses triggers changes in the membrane potential of the skeletal muscle cell membrane. Transverse tubules are cell membranes that elongate into the cell like a tube and attach to the intracellular sarcoplasmic reticulum that transit the changes into the cells [29] as shown in Figure 1(A). The release of Ca2+ions due to action potential

from the sarcoplasmic reticulum (a network of flattened membrane sacs which around each myofibril create a sheath) into myofibril takes place. Ca+ ions then bind to troponin complex which results in a change in shape and slight movement of troponin. This slight movement of troponin leads to the slight movement of tropomyosin, which sequentially reveals myosin-binding sites through the actin thin filament [30]. Moreover, Muscle contraction depends on the connection of tropomyosin and troponin with actin fibres as shown in Figure 1(B).

1.1.2 Definition of Muscle Contraction

Within the muscles fibres, there is a tension generating sites, the activation of these sites known as Muscle contraction. Muscle contraction is generally described based on tension and length. It is Isometric when muscle tension changes but the muscle length remains the same. Isotonic is another condition of muscle contraction which occurs if muscle tension remains the same throughout the contraction. Similarly, muscle contraction is eccentric if muscle length is extended, whereas if muscle length shortens, the contractions are concentric [31].

The EMG signal obtained during the isotonic condition of muscle contraction is widely used to classify clinician applications (neuromuscular diseases, muscle fatigue) and engineering applications (control assistive robots, lower limb orthoses) [31]. It is worth emphasising, EMG reflects the electrical events of muscle whereas FSR acquires the mechanical events of muscle during muscle contraction. Different types of sensors and techniques can be used to measure the mechanical muscle contraction. Mechanomyogram [5] record the mechanical vibrations produced by muscles. Force gauges [32], accelerometers, piezoelectric contact sensors [33], laser distance sensors [5], muscle circumference sensor [2], a resonance-based active–muscle stiffness sensor, ultrasound scanners [34] evaluate morphological change in muscle feature, pneumatic sensors [27], LEDs and photodiodes (together) measure backscattered light from the muscle tissues [5], measuring the muscle belly (radial enlargement) and detecting muscle contractile properties.

1.1.3 Mechanism of human upper limb

The upper limb is divided into three parts: a) the upper arm extends from the shoulder to the elbow b) forearm extends from the elbow to the wrist c) and the hand extends from distal to the wrist. The upper limb contains a total of 30 bones. Similarly, the muscular system is composed of specialised cells called muscle fibres. Muscles, attached to bones or internal organs and blood vessels, are responsible for movement and most of them are the result of muscle contraction [35].

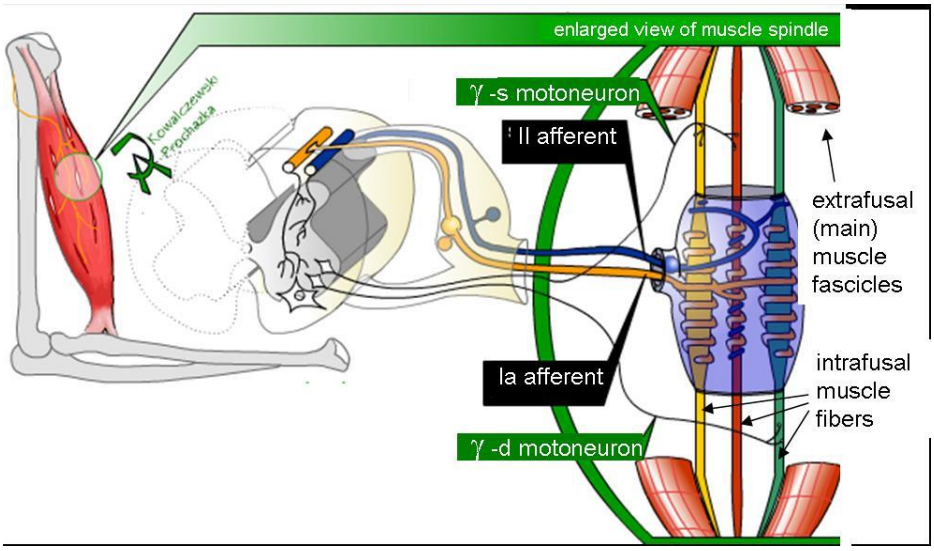

Figure 2 Structure of muscle spindles [36]

Muscle spindles are stretch receptors found within the belly of the muscles that primarily detect changes in the length of the muscle. They convey information processed by the brain as proprioception (is the sense of self-movement and body position) to the central nervous system via afferent nerve fibres. Muscle spindle responses to change in length play an important role in regulating the contraction of muscles. When a muscle stretch, primary type Ia sensory fibres and II sensory fibre of the muscle spindle respond to the length change in muscle and transmit this activity to the spinal cord in the form of changes in the rate of action potentials. Motor neuron provides the motor part of the spindle. These motor neurons activate the muscle fibres within the spindle. Activation of the neurons causes a contraction and stiffening of the end part of the muscle spindle muscle fibres. The connection between the motor neurons and the muscle fibres is a neuromuscular junction to the need for delivering energy in the form of synapses, where the neuron's signal, the action potential is transduced to the muscle fibre by the neurotransmitter. Those transmitters merged to arrive at the acceptor regions of the muscle fibres and then follow the trigger instructions and make the focused muscle move. The release of neurotransmitters thus controls the movements of the entire musculoskeletal system. The Ia afferent(arriving fibres) signal is transmitted monosynaptically, causing a muscle to resist the stretch as well as polysynaptically, causing a muscle to relax [36].

1.1.4 Myoelectric upper limb prosthesis

Myoelectric Prosthesis is an externally powered artificial limb [37] that is controlled with the electrical signals generated naturally by the amputee 'own muscles' such as contraction of muscle fibres in the body [38]. These could be residual muscles over the stump or especially re-purposed muscles that would normally waste away after amputation such as support muscles of the shoulder that after amputation not having to sustain the limb weight would naturally waste away. Obviously,

the prosthesis does not possess muscle spindles hence the afferent pathway that would convey information about position and posture is anyway served.

1.1.5 Electrodes/sensor

Electrodes/sensors are fabricated in the socket prosthetic receive electrical signals from the existing muscle of the residual limb. Sensors transfer the information to the control unit which translates the data into commands for electric motors and hence assist to move the joints. Just in case to control the prosthesis, if muscle signals cannot be used, the switches or pull-push or touchpad is used. Some other types of sensor available are explained in brief below:

1.1.5.1 Surface electrode

Surface electrodes (non-invasive) are used to record the muscle activity or function from the surface of the muscle on the skin only. More than one surface electrode is needed to record the surface EMG, because EMG recordings show the potential differences between two different electrodes. High density EMG electrode is also used in analysis of sEMG. This technique uses multiple electrodes to measure the electrical activity of muscles in the limited area of skin and to capture temporal and spatial information from the EMG activation area. Using high-density electrodes device for acquisition can not only overcome the shortcomings of the poor durability of the monopolar electrode shifted but also can detect signal information from some small muscles movements [39].

1.1.5.2 Implantable electrode

IMES used to provide good prosthetic control compare to surface EMG as it picks up myoelectric signals from deep muscles which eliminate the problem related to electrode replacement, artefacts, and perspiration. The telemetry controller where the sensor is implanted to receive EMG signals in this system removes the problem of percutaneous wire. Similarly, the signal from implant to arm is connected through external coil [23].

1.1.5.3 Electro resistive Band (ERB)

ERBs are a type of transducer which is composed of a cylindrical conductive rubber band. This band (2mm diameter) is made of carbon-impregnated rubber. Its resistivity is about 140-160 Ω/cm. ERBs length of wire is directly proportional to its resistance. Whenever the length of wire increases, its resistance also increases. When a band is in the non-stretched state, the resistance value of band is about 300-400 ohms per inch. ERBs band does not require contact with the skin. It is cheap and can be modified to any size due to its extension capacity [40].

1.2 Objective

Limb amputation can cause immense physical and psychological stress for a person. This leads to poor quality of life for the amputees. The most common cause of amputation is poor blood circulation due to peripheral arterial disease. Other causes are vehicle accidents, serious burn,

cancerous tumors, serious infection, neuroma (thickening of nerve tissue) and frostbite. The development of myoelectric activated prosthesis has opened up new potentiality for amputees. Manufacture of prosthesis limb is not a new practice; as non-functional prostheses were used for aesthetic reasons in earlier days. Later on, many prosthetic limbs have been developed with lots of improvement in their functions. Today, we can have some highly functional prosthetic limbs that using advanced controllers can mimic many of the functions of the lost limb. As an example, Bebionic [41] open bionics [42] is one of the most lifelike, functional and easy to use myoelectric hands which are commercially available today. However, despite these devices can improve the amputees' life quality i.e. to returnable to perform simple daily tasks independently. Due to the high cost of the myoelectric prosthesis available now it is impossible for many amputees to get access to functional prostheses. For the development of Myo-activated prosthesis, EMG is still used as a first option for the measurement of muscle contraction. Uses of the electrode to acquire the EMG signal lead to the electromagnetic interferences, skin surface preparation, electrodes mismatch and amplifier noise, high sample rate. Furthermore, the raw EMG required signal processing to obtain important information (EMG-LE) on muscle contraction level. Although the aim of this research is to develop a low-cost generalized device suitable for theoretically any limb, the main focus will be on the hand. It is an essential component of the human body, with an un-compelling spectrum of functionality. It is also fundamental from social conventions to syntactical communications.

Due to so many drawbacks of EMG electrodes, an alternative FSR based sensors has been proposed to monitor and measure the muscle contractions. FSR does not require skin preparation, minimizes electromagnetic interferences and no signal processing is required. As well as FSR requires low sampling frequency and can operate on low computational power.

Accordingly, the major objectives of this research are:

- To show the relation between EMG-LE and FSR output signal.
- To provide the quantitative results to show EMG-LE is replaceable.
- To demonstrate FSR can be used in the development of myo-activated prosthesis.

1.3 Research Hypothesis

EMG provides the electrical events of muscle, whereas FSR gives the mechanical results of the electrical trigger. Muscle signal sensor limited to electromyogram sensing is cumbersome, flimsy and fragile. It should be also stressed that to acquire the EMG linear envelope (minimal control signal for the prosthesis) from raw EMG, high sample rate is required as well as some form of signal processing. With this thesis, we compare the computational power for a simple prosthesis driven simultaneously by the EMG LE (single lead) and the FSR raw signal. To find the most appropriate FSR position for the replacement of single EMG lead, three FSR's are used. These three FSR's are placed over the EMG electrodes in the middle of the targeted muscles. The combination of FSR's

(e.g. FSR1+FSR2, FSR2+FSR3, FSR1-FSR2) and individual FSR (FSR1, FSR2, FSR3) are observed and evaluated to find the one which is most correlated with EMG-LE.

Accordingly, it is hypothesized that:

- The proposed FSR based sensor reduces electromagnetic interferences, removes the need for skin surface preparation and enables sensing of other muscle-related activities such as muscle cross-sectional changes and muscle oscillation.
- Raw FSR can replicate the EMG crucial information without signal processing and at lower sample rate.
- FSR based control can be operated with low computational power.
- This research can move the state of the art (EMG) closer to a real-time cheaper and less cumbersome myo-activated prosthesis.

1.4 List of Publications

i) Accepted (19 October 2019) and Published (22 October 2019)

Nawadita Parajuli, Neethu Sreenivasan, Paolo Bifulco, Mario Cesarelli, Sergio Savino, Vincenzo Niola, Daniele Esposito, Tara J. Hamilton, Ganesh R. Naik, Upul Gunawardana and Gaetano D. Gargiulo "Real-time EMG based pattern recognition control for hand prostheses: a review on existing methods, challenges and future implementation" Sensors IF3.02. https://doi.org/10.3390/s19204596.

ii) Accepted (International Conference on Electrical Engineering Research and Practice (ICEERP) 2019) and Published (13 January 2020 on IEEE Xplore).

Nawadita Parajuli, Felipe Ulloa, Neethu Sreenivasan, Ganesh Naik, Paolo Bifulco, Daniel Esposito, Sergio Savino, Mario Cesarelli, Tara Hamilton, Upul Gunawardana and Gaetano Gargiulo "Electrodeless FSR linear envelope signal for muscle contraction measurement". https://doi.org/10.1109/ICEERP49088.2019.8956984

iii) Accepted for publication in the IEEE International Symposium on Medical Measurements and Applications (MeMeA) on 2020.

Daniele Esposito, Gaetano Dario Gargiulo, Nawadita Parajuli, Giuseppe Cesarelli, Emilio Andreozzi and Paolo Bifulco.

"Measurement of muscle contraction timing for prosthesis control: a comparison between electromyography and force-myography".

2. Background

As mentioned the current state of the art for the control of the myo-activated prosthesis is EMG. To control the myoelectric prosthetic hand EMG based control systems can be classified as a pattern recognition control system and a non-pattern recognition control system. The non-pattern recognition control includes onset analysis, proportional level control, and threshold level control. All of those controls are easy to implement in real-time, but are limited to their movements (degrees of freedom). Pattern recognition-classification techniques attracted the researcher on controlling artificial limbs from early 1960 onwards. In this chapter, one reviews the EMG for real-time myo-activated prosthesis and the history of force sensitive resistor in prosthesis which can also be used as an alternative to EMG electrodes.

2.1 Real-time EMG-PR control of myo-activated prosthesis

Though the high functionality (multiple DOF) and high accuracy are achieved on testing offline and real-time collected data from amputees with pattern recognition control techniques. However, when tested for real-time usability by amputees does not give the same level of performance and accuracy. In this section, we described the techniques for the pattern recognition control in brief and some of the experimental outcomes on the real-time collected data from amputee, real-time with embedded packages and real-time using virtual reality environment.

Pattern recognition approach consists of segmentation of data, feature extraction, and classification of a set of features or patterns for the various mode of myo-activations [43], [44]. Some of the existing pattern recognition techniques used for myoelectric controls are shown in Figure 3. Feature extraction and windowing are two different parts of the [45] segmentation of data. Several studies use a pre-processing stage before the feature extraction to avoid the preliminary level of inherent disturbances and electromagnetic interferences. The output of pattern recognition is categorized into different classes or labels based on the input feature extracted. The classes define the control of the actuator with a specific command. In the next (sub) sections, we explain the detailed steps involved in real-time pattern classification of EMG based prosthetic hands.

2.1.1 Pre Processing of recorded EMG signal

Recorded EMG signal is characterized by much interference such as signal acquisition noise, electromagnetic disturbances, signal instability, motion artefact due to electrodes and cables. Pre-processing is the very first step of pattern recognition techniques regarding proper signal analysis and minimizing the inherent interferences [48]. It should be noted that ICA and CSP are used as a pre-processing (filtering) and Dimensionality reduction (after feature extraction).

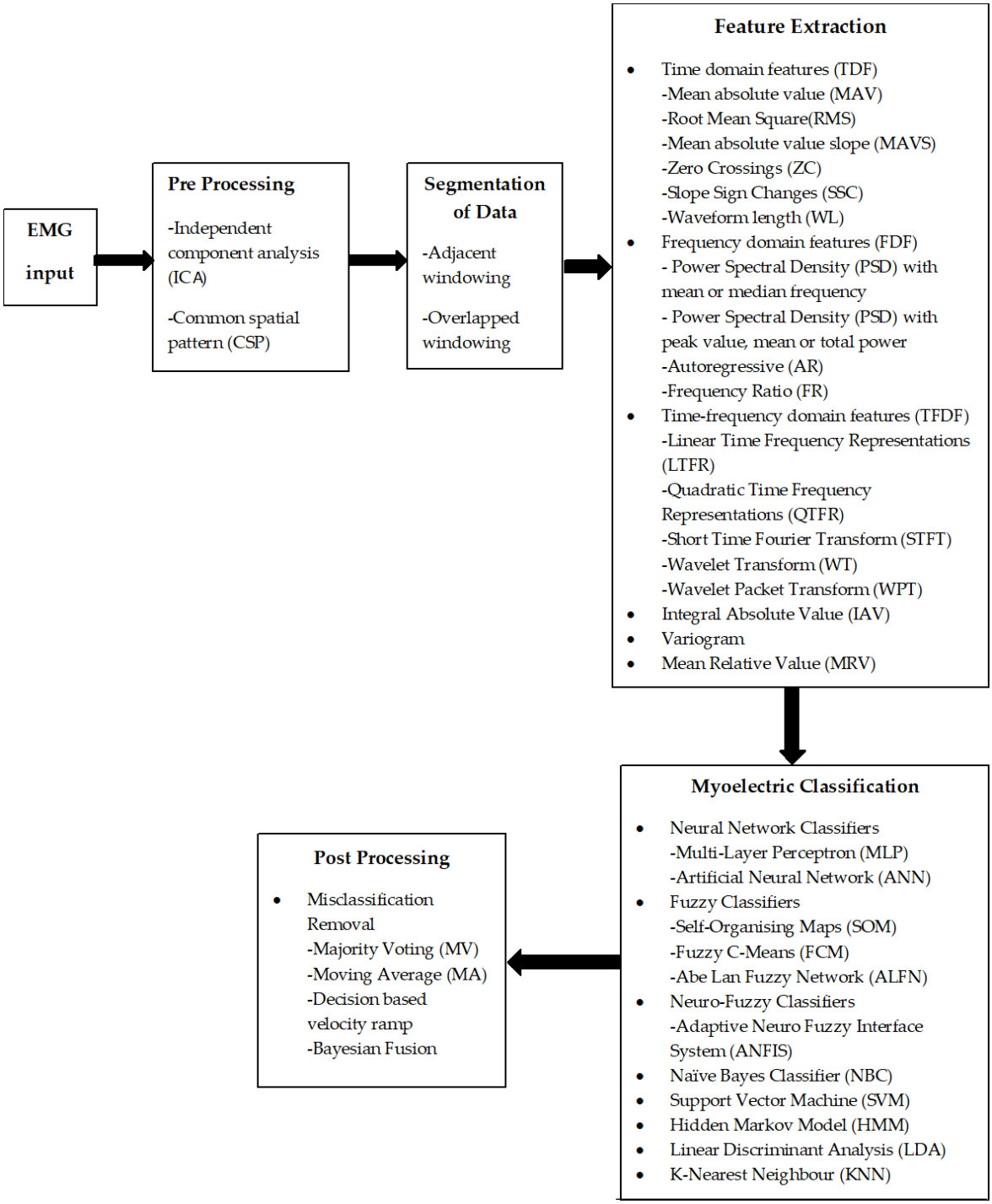

Figure 3 General pattern recognition schemes [16],[46],[47]

2.1.2 Segmentation of data

The result obtained from the pre-processed EMG signal (random nature) is not regarded as a useful input in the pattern recognition technique. Thus, to extract the descriptive features, the window (segmentation) of the pre-processed data is required. There are mainly two different types of windowing techniques proposed: overlapping window and non-overlapping (adjacent) window. In overlapped windowing technique, the former window overlaps over the current window with increment timeless than the window length itself [16]. The window length should be selected properly

in real-time, which could deliver an acceptable delay. Larger window length would provide high classification accuracy but delay in the classifier's decision.

Segmentation of EMG data (using windowing) helps in estimating the intended motion for the myoelectric classifier. It helps in the decision making of intended motion while new data are being acquired. Englehart and Hudgins [49] used adjacent, disjoint analysis window length equivalent to 0.25 * Sample frequency (SF) (256ms for SF of 1000 Hz) for continuous myoelectric classification [50]. They also demonstrated that the data segment length of 0.125*Fs (128ms for SF of 1000Hz) or even less as 0.03125* SF (32ms) could be considered, without much reduction in accuracy for the continuous segmentation of steady-state signal. As with the advanced real-time computation facility and high-speed processors, data processing could take less than 5ms, thereby classifying data segment length could vary from 32 to 25ms. In this approach, with the time increment less than segment length, the new segment could slide over the current segment. The segment length must be higher than the processing period because the mainframe feature set had been calculated and must take a choice earlier to the next segment. Thus, normally the denser yet semi-class decisions are made through small segment increments that help to improve response time and accuracy [51].

2.1.3 Feature Extraction

Generally, EMG features are extracted in the form of time-domain (TD), frequency domain (FD), and time-frequency domain (TFD). In the TD, the features are extracted from the variations of signal amplitude with time [52] as per the muscular conditions. Unlike time features, the frequency domain uses the power spectrum density of the myosignals for extraction [53]. Whereas, the combined features of time and frequency domain are used for time-frequency extraction (examples such as short Fourier transform and wavelets). The studies based on feature extractions proposed across TD, FD, and TFD, shows the best results using TD EMG feature. Hudgins [54] proposed the four different time-domain features (MAV, WL, ZC, SSC) [55] for feature extraction from EMG, and it is most adopted one to date in the field of myoelectric pattern recognition [16]. Willison amplitude (WAMP)[56], Autoregressive (AR) model parameters [57], time domain-auto regression (TD-AR) feature are also used to extract feature information. In comparison to other feature extraction methods such as Fourier transform and Wavelet Transforms(WT), TD-AR features have achieved higher classification performance for the detection of hand movements with EMG signals [57]. Lui and Huang [58] implemented a 4th order AR model for the EMG feature extraction and showed better classification performance. This approach only includes the trained data (EMG pattern classes) and rejects all untrained data of classifier. Some of the recently developed features are Wavelet packet transform(WPT) based features [16], short-time Fourier transform (STFT) [59] and, EMG synergies by matrix factorization analysis [60]. STFT comparing to TD and fractal domain features state EMG signals better relationships with different muscles.

Recently, time-dependent power spectral descriptors (TD-PSD) [16] were proposed, which consists of feature sets (wavelength ration, sparseness, irregularity factor, and spectral moments (first, second and fourth)). TD-PSD with force level training shows more robustness of pattern recognition against force variation than most of the other feature extraction methods [61], such as reduced spectral moments by Vuskovic and Du (VD-MOM), AR+RMS, TD, wavelet and discrete Fourier transform (DFT) [62]. Khushaba [63] proposed a temporal-spatial descriptor (TSDs). EMG features set collected from several intact-limbed and amputees are accepted on multiple sparse and high-density (HD) for executing multiple degrees of freedom (hand and finger movements). Time-derivative moments (TDM) based feature extraction [64] is a novel feature set extraction proposed to enhance the performance of EMG-PR in upper limb motion classification. Furthermore, most of the previous studies had focused on time-domain features to reduce computational difficulty. In addition, it does not require additional levels of data transformation [31].

Usually, after feature extraction, dimensionality reduction (DR) is applied. DR is the process of removing the number of arbitrary variables under consideration by locating a group of key variables. When the information is liberally dispersed (scattered) due to the EMG classification, there may be a problem caused by the large variance of the EMG signal. So, dimensionality reduction methods can unite this information more effectively and solve the problem of feature dimension. Dimensionality reduction thus helps in saving the computational cost and reduces the level of system complexity [65]. ULDA, PCA, OFNDA (Orthogonal fuzzy neighbourhood discriminative approach) are common dimensionality reduction (DR) technique used to reduce the feature space.

2.1.4 Myoelectric classification

The next stage, followed by feature extraction, is feature classification. The information gathered during feature extraction is fed into the classification stage. A classifier should able to classify the pattern efficiently in less time to meet the real-time constraints of the prosthesis. Notably, only a few numbers of studies have compared the potentiality of classifiers to meet real-time control.

The myosignals pattern classification for explicit movements is more focused on the extraction of activities from arm muscles. For amputees, due to amputations, only a few muscles will be present in the residual limb to extract the feature of signals. For instance, in the case of transhumeral amputation, the availability of forearm muscles is completely unavailable. Most of the pattern recognition studies are, therefore, concentrated on trans-radial control. However, several studies tried to classify finger movements using multiple features and classifiers, such as multi-layer perceptron and neural network. Usually, in EMG-PR, the classifier performs well on trained (actions) classification patterns. To improve the robustness of PR systems, an untrained classification pattern is also equally important. Furthermore, from the past few years, the detection of untrained actions (novelty detection) has also been studied. In order to solve the problem of novelty detection [66],

different methods were proposed and studied, such as the ensemble of one-class support vector data description (SVDD) [58], and modified boosted random forests [66].

Although various classification methods are available, classification algorithms include two main trends: Statistical (LDA and SVM) and Neural (MLP and ANN) [67]. The conventional PR method also depended on KNN and LDA algorithms to categorise arm motions into different pattern classes. LDA scheme is one of the most adopted classifiers in the implementation of myoelectric control. LDA classifier has shown high classification accuracy, and it is very simple to implement [68]. In KNN feasibility and precision check of classifying features have done for diverse time windows such as EMG histogram and noise levels [69], [70]. In 2001, instead of concentrating fully on the classifier like KNN or LDA, some authors demonstrated that the pattern classification and its accuracy are more deeply depend on the selection of features [71], [59]. As the input data is suddenly changing myosignal, it has the downside of immediately switching the control from rest to contraction. This prohibits changeover of the feature set from one to another in less time and an efficient manner.

Moreover, it delays the coordination between multiple tasks utilizing large degrees of freedom in real-time. As a solution, the wavelet packet-based feature set can classify myoelectric activity in real-time where the data streams are continuously exhibiting superior performance. A research work then started on the KNN classifier with a genetic algorithm, upon the trans-radial muscles having the potential to control a multi-fingered prosthetic hand.

Another classification technique mostly used for the EMG signal classification is an artificial neural network (ANN). An ANN is easily trainable and has the capability of modelling both linear and non-linear data [68]. The SVM classifier, due to its kernel-based characteristics, has gained wide application in the field of myoelectric control. SVM is most popular for performing classification as well as regression using machine learning tasks. SVM is an advanced statistical learning approach providing an accurate and optimal solution in a short time.

Although a lot of developments and progress were made in the field of EMG-PR, the development of DOF prosthesis that could aid in simultaneous prosthetic controls is still a challenge. Based on the literature studies, it indicates that classification accuracy can be increased with appropriate use of EMG channel and feature set.

2.1.5 Post-processing for Upper limb EMG

To overcome the limitations of conventional EMG control [16] post-processing has been proposed. Furthermore, the post-processing stage is next to the classification level for the removal of errors and misclassifications. The control performance of a multifunctional prosthesis in a practical and laboratory setting will always show various disparities. To minimize this classification error due to unintended actions during the real-time applications, Simon et al. [72] introduced the practice of decision-based velocity ramp functions as a post-processing method. This function attenuates the

speed of action soon after the classifier decision is altered. Moreover, post-processing approaches give a smooth state transition from the current motion class to the changeover state. The greatest advantage of this is that it could be combined with the multi-level real-time continuous control. Some of the other post-processing techniques are Moving Velocity [50], and the Majority vote [59], [73], [74]. The majority vote [75] has also shown improvement in real-time EMG-PR control of hand prosthesis.

All advances in pattern recognition schemes with multiple input channels have improved the overall classification accuracy for multifunctional control. Pattern recognition methods inherently use sequential control, which requires sufficient windows (intervals) to extract useful classification features without delay of response time. When the processing window decreases, the performance window decreases significantly. Generally, with a normal pattern recognition algorithm, simultaneous and proportional control is difficult to achieve. For instance, to grab an object – closing of fingers together with pronation, an additional combination of classification features is required. This may increase the number of patterns needed to be trained which in turn creates an undesirable increase in response time. Moreover, pattern recognition does not provide proportional control, which is critical for optimizing the response time. As classifier is a binary decision control, it cannot influence the speed or strength of prosthesis that requires an additional proportional component to the control of the signal. This will make the system more complex and decrease overall power [76].

To overcome the need for a complex device and to provide proportional and simultaneous control, regression is one of the commonly used methods [66]. The regression approach can evaluate a number of control signals continuously from the EMG signal directly. For example, if one control signal assists wrist rotation then the other control signal evaluates hand opening. Moreover, this approach provides more user-friendly and spontaneous control of the prosthesis. Some of the regression approach used for the control (movement) of prosthesis are linear and non-linear regression [21], ANN [77] and non-negative matrix factorization [60]. The regression method has so far presented promising results, permitting direct and spontaneous control to the user and further developments are likely to reinforce the robustness of regression approach.

Moving from the virtual environment to the real world requires the implementation of prosthetic devices. One of the major challenges that influenced the usability of the prosthesis is the lack of robust and a portable embedded system to implement the EMG- PR algorithms, other challenges include the design of dexterous prosthetic hands, multichannel electrodes placement, compensation between power consumption, small size, etc. [78]. Various hardware has been implemented to develop prosthetic hands for persons with disabilities. Hardware chips are designed for filtering EMG signals and other applications such as grasp detection and human-computer interventions to obtain an accurate signal for prosthetic arm control. Furthermore, a virtual environment allows the user to practice different controlling gestures that the designated prosthetic device supposed to control in real-world [79]. Some of the experimental outcomes on the real-time

collected data from amputee, real-time with embedded packages and real-time using virtual reality environment are discussing in the following section 2.1.6, section 2.1.7 and section 2.1.8 respectively.

2.1.6 Real-time collected data from amputee

Several research studies on able-bodied and hand amputees have been done to evaluate the consequences of arm position variation on EMG-PR classification performance. Offline classification accuracy/errors have shown that arm variation affects the classification performance. To reduce such effect of arm variation, various classification techniques [80] have been proposed. Similarly, classification accuracy identifies the desired movements from several classes of motion. Some of the previous research studies had shown that offline classification has not a good correlation with real-time performance of EMG-PR [80] control of the prosthesis. However, some of the recent classification accuracies on the real-time performance of amputee data are explained in this section. Nearly all EMG-PR control for real-time collected data from hand amputee followed the same stages to operate. The features are extracted from pre-processed EMG data. From the extracted data, the feature is usually selected for training and control set. Then the classification technique is applied for training classifiers and control set classifiers. The Figure 4 shows the general algorithm of this whole system.

In 2003 Karlik et al. [82] conducted a study on the classification of myoelectric signals for precise overall control of multifunction prosthesis using Fuzzy clustering neural network architecture. The author also compared the accuracy of multi-layer perceptron (MLP) having a back-propagation algorithm and the new fuzzy clustering neural networks (FCCN). The fuzzy clustering involved the division of input data into several fuzzy parts that intersect each other and thus defined by membership grade [0, 1]. An algorithm was proposed to implement these fuzzy clustering that minimizes the cost function. A comparative assessment shows that using FCNN provides more reliable results than MLP. The FCNN achieved 98% accuracy with half training time than that of MLP. Later in 2005, a promising method by Chan and Englehart [83] added into the row of the continuous controllers. The new method followed a hidden Markov model (HMM) as the data segment classifier. The HMM classifier was a suitable probabilistic approach for pattern recognition at that time due to the resilience to sequential myosignal variations. For a 4-channel six function design, HMM has more performance accuracy (94.63%) than MLP with a good level of robustness and quick response.

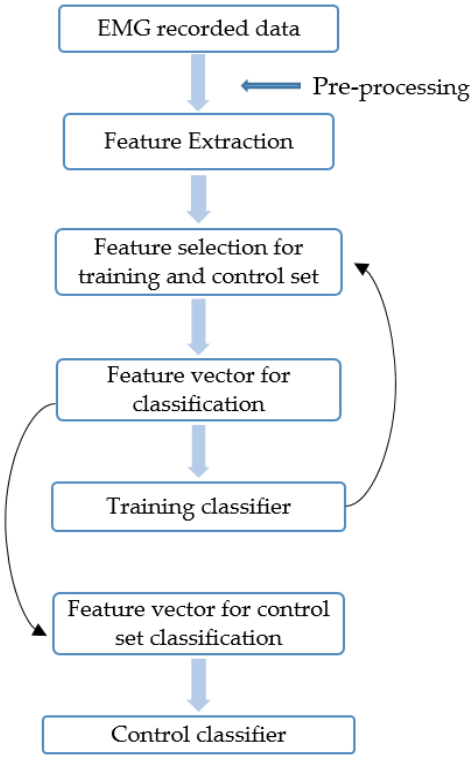

Figure 4 General pattern followed by the EMG-PR for real-time collected data from amputee [81]

Al-Timemy et al. [57] proposed a process for the classification of finger motions for dexterous control of the myoelectric prosthesis. The myosignal was recorded from six traumatic below-elbow amputees. TD-AR features were used to extract useful information from the segmented EMG window. To find the best match of features reduction (to reduce computational power) and classifiers, two different features reduction tools (PCA and orthogonal fuzzy neighbourhood discriminative approach (OFNDA)) and classifiers (LDA and SVM) were combined to make four different forms. The results show the high accuracy with OFNDA and LDA.

Furthermore, the studies show that feature reduction plays an important role than a classifier to achieve high accuracy with multi EMG channels. In 2013, Pan et al. proposed a solution for partial hand amputees with the functional wrist to predict the finger joint angle using EMG [84]. The experiment was performed on two amputees. EMG signal was recorded from eight targeted muscles and was sampled at 2000Hz frequency. TD feature sets were fed to the LDA classifier to identify seven different static wrist positions. A switching rule, including LDA classifier and fourteen state-space models, was proposed for continuous decoding of finger joint angles. The average classification error rate (CER) was 6.18%, which demonstrates that forearm movements and the continuous movement of the finger can be easily classified. Similarly, in 2016 Ganesh et al. proposed the combination of ICA and Icasso to minimise the number of EMG sensors and increased robustness of myoelectric control [17].

Early in 1993, [3] experiment performed on one amputee using Hudgins feature set. These features classified using ANN classifier with one EMG channel proved that the EMG signal shows a

deterministic structure during the beginning of muscle contraction. Whereas, Riillo et al. [85] proposed an optimization methodology of sEMG based hand gesture classification using pre-processing techniques such as PCA (unsupervised) CSP(supervised). One trans-radial amputee (right-hand below-elbow amputee) participated in the experiment. TD features were extracted from segmented data (using overlapped windows). Similarly, three classifiers (LDA, SVM, and ANN) [85] were tested by assessing the average accuracies of each time window. The study shows that the best results obtained for the real-time system were using the ANN classifier.

Another research work extended the classification control using a support vector machine (SVM), obtained high accuracy (92–98%) with less training time [86]. Stango et al. [87] used the SVM classification technique, followed by variogram features. The variogram is a measurable degree of spatial correlation. The experiment was performed on one trans-radial traumatic amputee. The main purpose of this experiment was to analyze the spatial features of HD EMG-PR for myoelectric control. Variogram features maintain good classification accuracy without retraining even the EMG channel is eliminated during the experiment phase. Hence the study shows spatial proposed improved the robustness of EMG-PR. In [88] the effectiveness of using twin SVM (TSVM) in multi-class prosthetic control with unbalanced datasets was demonstrated with RMS value (feature).

The summary of the comparison of some of the EMG-PR classifiers using real-time amputee data is shown in Table 1. All the achieved accuracy was demonstrated only in ideal research settings. Among the many classifiers (Figure 3) in myoelectric control, LDA seems to be widely used classifiers. Whereas, SVM and KNN due to their kernel trick characteristics and non-parametric nature [70] respectively have equally used widely. Though the better performance was achieved with many classifiers, high-density surface EMG is impractical to use as a source for real-time control.

Table 1 Summary of various individual classifiers and combined classifiers tested on amputee data1 [81]

Pre-processing	**Segmentation/ window length**	**Feature extraction/ DR**	**Classification**	**Post-processing**	**Classes/ EMG channel**	**Accuracy**
N/A	256ms overlapping 32ms	TD, 6AR, RMS/ PCA, ULDA	KNN, LDA [89]	Majority vote	7/57	>97%
N/A	200ms length with 50ms increment	6AR, RMS, IAV, ZC, WL, SSC/ OFNDA	LDA [57]	N/A	12/11	90%
N/A	200ms with 50ms increment window	MAV, ZC, WL, SSC/ N/A	LDA [84]	N/A	7/7	95.64%
ICA	250ms overlapping window with 64ms increment	4AR, RMS, MAV, ZC, VAR, WL/ ULDA	LDA [17]	N/A	12/11	>90%
CSP	300ms with 75ms of delay between the overlapped window	M, RMS, WA, SSC/ PCA	ANN [85]	N/A	5/6	92.04%(PCA) 93.4%(CSP)
N/A	Window set to 4500 and window shift 50	Variogram/ N/A	SVM [87]	N/A	7/48	81.6%
N/A	256ms with window shift 32ms	WL/ N/A	NN [90]	N/A	4/6	An average RMS error=0.16 for 4 patterns
N/A	200ms sliding window	RMS, log(rms)/ N/A	Fuzzy c- means clustering [91]	N/A	4/3	87.5±13%
N/A	200ms with an increment of 75ms	RMS, WL, ZC, SSC/ N/A	LDA [92]	N/A	6/8	>91%

[1] The table omits the results from able-bodied subjects.

2.1.7 Real-time EMG-PR with embedded system

An embedded system is customized to perform a specific task and function often with real-time control. This system is mainly based on microcontrollers or microprocessors. Real-time embedded for the EMG-PR for hand prosthesis can be enhanced to reduce cost, size, and increase the reliability and performance of the prosthetic device. Almost all of the real-time EMG-PR control using embedded systems followed the same stages to operate, as shown in Figure 5. Firstly, the sEMG signal is recorded from the subject muscle using electrodes. Then sEMG signal acquisition takes place. This signal goes through pre-processing techniques. The features are extracted and selected from the pre-processed signal. Once the selected features are classified, the command is sent to the embedded controller to control the end effector.

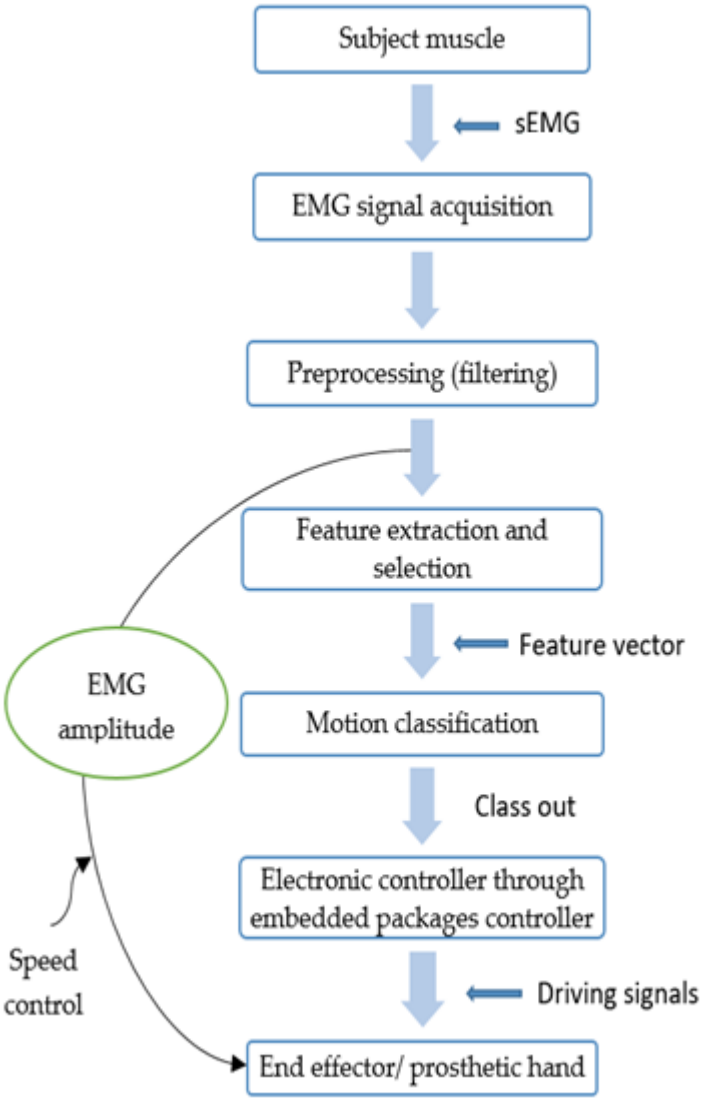

Figure 5 Real-time EMG-PR with embedded system [81]

Wirta et al. [93] first reported the used of embedded myoelectric pattern recognition system in 1963. The robotic arm was developed, and discriminant analysis was chosen as a classification technique. After a few years during 1996, a real-time EMG-PR was proposed with a digital signal processing (DSP) (TMS320C31) based system having a modified maximum likelihood distance (MMLD) classifier. Four able-bodied and two quadriplegic subjects volunteered and were designated with five motions of neck and shoulders. The total response time for EMG discrimination was 0.17s, and it achieved a 95% mean discrimination rate [94]. An analog integrated circuit for the wireless transmission of physiological signals designed by Yeng et al. [95] focused more on the transmission system, not on implementation of the prosthesis. In 1999, an Evolvable Hardware (EHW) chip for myoelectric artificial hands was developed to serve as a standard tool for hardware validation [96].

To access the computer for limb disabled through their remaining muscles, a real-time assistive device was designed in 2007 with PR of EMG signals [97]. The signals were measured from the muscles of the lower arm of the subject during different wrist motions. The obtained signals were filtered, and a supervised multi-layer neural network trained by back propagation algorithm was used for classification of the user's movement and clicking of a cursor. The drawback of that article was that the researcher gave more focus to the qualitative evaluation of performance than presenting the control implementation. Similarly, Anbin et al. [98] proposed the novel combination of signals (EMG and inertial measurement unit (IMU)) to be used for mouse controller (cursor movements). LDA classifies the EMG data into several groups of 128ms time window and 32ms increment window, which correspond to the pre-defined computer mouse operations. The results showed an accuracy of 88%.

In 2007, Bitar et al. [67] explained in detail the design of portable Musical Instrument Digital Interface (MIDI) using a continuous wavelet transform (CWT) decomposition and SVM. A low-complexity portable dsPIC33FJ256GP710 embedded system was designed that collects and classifies EMG signals. This embedded system is quite inexpensive and consumes less power. The output from four-channel was sampled at 1 kHz frequency using the dsPIC's on-chip A/D converters. The channel window (fixed-length windows of 0.6s with 0.3s overlap) was normalized by its respective power. The CWT coefficients were computed for each and every channel separately, and the desired features were extracted. Finally, six class classification was performed using the SVM classifier, and the decision of the classifier transmits the result as labels in real-time using Bluetooth to a remote interface. Moreover, to control a MIDI-enabled device (mechanical prosthetic hand); these labels are then converted to MIDI commands. The experiment showed an achieved 91% accuracy.

Ke et al [78] present the latest progress on EMG-PR control of a prosthetic hand. EMG signal was acquired using an armband with eight-channel electrodes. A powerful embedded system was introduced to deal with the decoding algorithm of EMG signals. These real-time surface myoelectric signals decoding and EMG training (on board) are incorporated in the embedded system to control a

prosthetic hand of six DOFs. The result shows that its possible of speeding up the movement of PR prosthetic arm into a daily application is promising.

In 2013 Xiaorong et al. [99] proposed a first real-time EMG-PR self-recovery classification using a cumulative sum algorithm (CUSUM) detector. 48 motion artifact was introduced on twelve real-time testing trials. CUSUM detector successfully detected the 43 artifacts, which lead to 93.5% of the elimination of misclassification caused by motion artifact. Similarly, in 2015 Ann et al. [100] compared the non-adaptive (conventional) and adaptive control (real-time) prediction learning. The experiment was performed on one trans-humeral prosthesis and three able-bodied subjects. EMG signal acquired using eight channels sampled at 1 kHz to classify the eight classes of motion. Subjects were asked to wear Bento arm (anthropometric robotic arm), which consists of MTT (AX-18 smart robotic arm) incorporated of five DOF. The result shows the adaptive control decreases the total switching time and improve myoelectric robotic arm during uninterrupted use by subjects (amputee and normally limbed).

A few articles show the real-time control of commercially available prostheses for finding the user experience with pattern recognition control. Understanding the patient's experience can help clinicians and patients who choose prosthetic options. The commercially available EMG-PR control was interfaced with multiple degrees of freedom DEKA arm [101]. This study provided an extensive description of the user experience of operating a DEKA arm using EMG-PR control. The majority of the participants preferred the future prospective of EMG-PR as a control measure.

Mastinu et al. [102] presented the real-time implementations of PR techniques on dysmelia subjects (congenital disorder). The subject was asked to use iLimb-ultra (Touch Bionics, UK) for five consecutive days during the experiment. This system is known as the artificial limb controller which includes a pattern recognition system. The classification accuracy and motion test of the system were compared with different classes on motion (open hand, closed hand, side grip, fine grip, and pointer) individually. The real-time pattern recognition accuracy for motion test (subjects were asked to perform as directed on-screen) was higher than the classification or execution accuracy.

Hargrove et al. [103] demonstrated the outcomes obtained from the commercially available prosthetic used by subjects undergone targeted muscle reinnervation (TMR). Subjects wore a commercially available prosthesis to perform different household tasks. A comparison of direct method and pattern recognition methods in TMR subjects are performed and statistical significance of both methods is evaluated. Users performed well with pattern recognition incorporated devices. As well as among eight subjects participated, seven preferred pattern recognition control. Some of the papers related to the real-time with embedded packages are summarized and shown in Table 2.

Table 2 Summary of the real-time controller in an embedded package [81]

Pre-processing	Segmentation/window length	Feature extraction	Classifi-cation	Post-processing	Classes/EMG channel	Sampling frequency	Processor
N/A	N/A	N/A	MLNN [97]	N/A	6/4	1kHz	PCI-6034e
N/A	600samples(0.586sec)	CWT	SVM [67]	N/A	5/4	1024Hz	dsPIC33FJ256GP710
N/A	Overlapped analysis window 160ms with 20ms increment	MAV, SSC, ZC, WL	LDA [99]	N/A	3/4	1000Hz	M3-Microcontroller
N/A	300ms with 200ms overlap(100ms increment)	MAV, SSC, ZC, WL	LDA [78]	N/A	6/8	200K samples per sec	STM32F4072GT6
N/A	100ms with 50ms increment	MAV, SSC, ZC, WL	LDA [102]	N/A	5/7	1000Hz	M4 microcontroller
N/A	250ms	Integrate-EMG, RSS, INVAR	KFD (DR), RBFNN (classifi-er) [104]	Majority vote	9/8	200Hz/ channel	Arm Cortex – A53
N/A	200ms with 175 overlap	MRV, WVL, ZC, SC, 6AR	LDA [105]	N/A	7/12	1000Hz	Logic PD SOMDM 3730
N/A	150ms analysis window with 50ms overlap	MAV, ZC, SSC, WL	LDA [106]	N/A	11/12	1 kHz	USB-1616FS

Among many classifiers (NN and SVM), LDA is one of the most used classifiers for real-time embedded. LDA's main advantages are its simplicity of implementation in an embedded processor. Although many studies have been done and the embedded system has been implemented to develop the prosthetic of a lost limb using EMG-PR control, a major issue of achieving natural and reliable control of limb remains unsolved.

2.1.8 Real-time using virtual reality

To be able to control virtual prosthesis and to become familiar with a real-time prosthesis, voluntary muscle contraction control is very important: that is enabled using a visual feedback system. The improvement of learning depends on the user and visual feedback system, so the feedback system must allow the user to learn new tasks using their muscles [107]. Most of the virtual prosthesis followed the same stages to operate. Firstly, the EMG signal acquisition takes place using electrodes on the residual muscle of amputees. Then the signal is amplified and filtered to acquire the myoelectric signal to be used. The interface between virtual system and acquisition of myoelectric signal is created, which consists of isolation, pre-processing of the signal in hardware, personal computer (PC) communication, communication between PC and MATLAB, processing in software, communication between MATLAB and virtual world [107] (part of MATLAB). The general idea followed by most of the virtual prosthesis is shown in Figure 6.

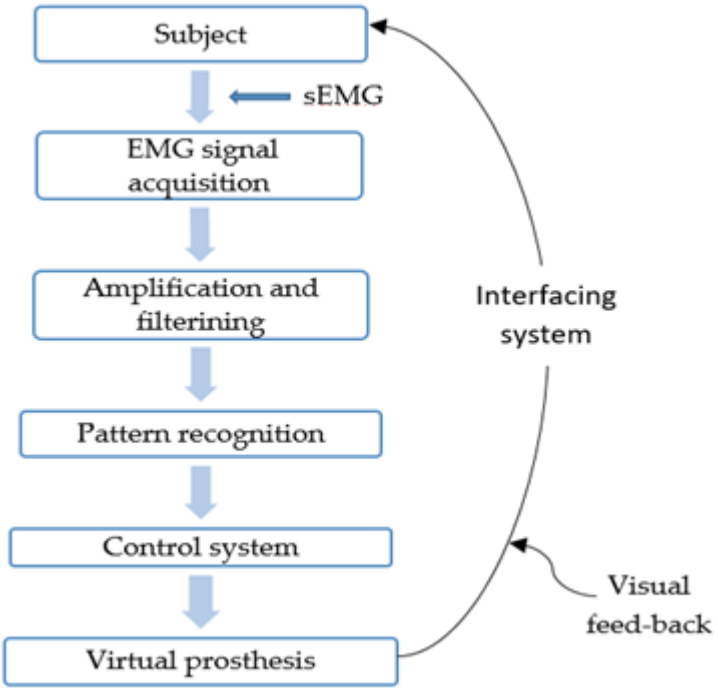

Figure 6 General representation of virtual prosthesis process [81]

The continuing examination of real-time control of prostheses using the myoelectric signal resulted in a robust scheme pattern recognition [108]. Twelve subject data from four channels were used for real-time control. Unlike the traditional methods involving transient control, which requires initiation from rest, a continuous stream of class decisions was delivered to the prosthetic device. Pattern recognition was performed on sliding time windows with 256ms in duration and with the LDA classifier. The continuous decision (intended motion) permitted intricate classifications involving multiple joints without disruption. The continuous classifier performs very well with a significant gain

in accuracy and response time over a wide range of analysis window lengths if accompanied by majority vote post-processing. Moreover, the control scheme required minimal storage capacity.

Ann et al. [109] present that the Target achievement control (TAC) test in the virtual environment provides a good platform for PR control practice and testing. In TAC test virtual prosthesis moved from an inactive position to the target position. In 2015 Martina and Haripriya [110] constructed a prototype using sEMG signal to record the data from the brachioradialis muscle of forearm to control the movement of PowerPoint slides transmitted in real-time. Furthermore, Agamemnon et al. [111] performed an experiment on 20 able-bodied and two amputees to find the outcome of two sensors (sEMG and inertial measurement (IM)). Twelve electrodes were used to acquire sEMG signal in a sampling frequency of 2 kHz. Feature sets such as MAV, WL, 4AR, logVar were extracted using a sliding window of 256ms with 50ms increment. Two sets of the experiment (offline and real-time) were performed. Real-time prosthetic hand control based on offline observation. Touch Bionics 'robotic hand' has been used for real-time performance. It shows that the combination of both IM and sEMG improved the classification performance of a prosthetic hand. As well as the use of IM and sEMG reduce number of sensor require to achieve high level of accuracy. Yanjuan et al [80] investigated that both offline motion classification accuracy and real-time motion completion rate are important to assess the performance of EMG-PR control.

Identifying multiple DOF (hand movements) using a few EMG sensors is one of the necessities for developing high levels of usability prosthetic hands. Trongmun et al. [112] present a signal processing technique that classifies 17 spontaneous classes of motion from EMG signals using spectral features and an ANN. Online classification experiments were performed on twelve subjects (seven male and five female) to assess the reliability of the proposed method. An overall correct classification rate of 83% was achieved, showing the ability to classify 17 movements from 6 EMG sensors. Besides, the classification of nine movements could achieve accuracy of up to 92%. EMG pattern classification has been widely studied to decode user-determined for intuitive prosthesis control.

The significant breakthrough was occurred with the introduction of surgical procedure to improve the control of hand prosthesis known as Targeted muscle reinnervation (TMR) [113]. The real-time and offline performance of EMG-PR with TMR patients was presented using a generic electrode grid. Four amputee subjects (two trans-humeral, two shoulder articulation) that undergone TMR surgery participated in this study. In a real-time virtual analysis as well as offline classification, a generic grid-like electrode performed better than the control site (specific site for electrode placement). Although TMR has the potential to provide advanced control of wrist and grasp patterns for myoelectric control, the concept has not yet been a success in implementing it to multiple DOFs for the prosthesis.

For assessing the real-time PR control of TMR based multifunction prostheses, Todd et al. [106] show the performance outcome based on motion (selection time, completion time,

and completion rate). The experiment was performed on both virtual and real prosthesis. The performance was first ascertained by training and testing with a virtual multifunction prosthesis. Later on, the experiment was carried on three TMR patients with upper-limb prostheses. The mean classification accuracy of 88(±7)% for patients who had undergone TMR surgery and 97(±2)% for control participants was achieved. Furthermore, the summary of some studies based on real-time using the virtual reality environment is presented in Table 3.

Table 3 Summary of real-time analysis with a virtual prosthesis [81]

Pre-processing	Segmentation/window length	Feature extraction	Classification	Post-processing	Classes /EMG channel	Sampling frequency
N/A	256ms	ZC, MAV, SSC, WL	LDA [49]	Majority vote	4/4	1000Hz
N/A	150ms analysis window with 50ms window increment	MAV, SSC, ZC, WL	LDA [109]	N/A	7/6	1 kHz
N/A	500 sample/sec	N/A	NN [114]	N/A	8/17	N/A
N/A	32 sample hamming window with 75% overlap	PSDs	ANN [112]	N/A	17/6	200Hz
N/A	Sequential analysis window 150ms with a time increment of 100ms (5oms overlapping)	MAV, ZC, WL, SSC	SPC CC MPC [80]	Majority vote	7/16	1000Hz
N/A	100ms overlapping sliding window	MAV	Error-correcting output codes classifier [115]	N/A	13/15	2048 Hz
N/A	150ms sliding window with 100ms increment	MAV, ZC, WL, SSC	LDA [75]	Majority vote	7/6	1000Hz
N/A	128ms increment to 1024ms	6AR and RMS	Linear regression cascade model [116]	N/A	3/6	1000Hz
N/A	250ms with 50ms increment	6AR, MAV, ZC, SSC, WL	LDA [113]	N/A	(9-13-17-29) / (14-15)	1 kHz
N/A	200ms sliding window	TD5 -MAV, SSC, WL, ZC	EASRC [48]	N/A	6/8	1000Hz

2.2 History of FSR in prosthesis

Force resistive sensor had been in used as a stimulator for the peroneal nerve of stroke survivors during the swing phase of gait since the 1960s. Rueterbories et al. [117] had also explored the gait events for stroke patients. Mainly gait events are detected by measuring the forced foot exerts on the ground. Shahmoradi and Shouraki [118] presented a gait recognition using FSR on the leg (insole near) to classify everyday locomotion modes (walking, stair climbing, standing). Adam et al. [119] used FSR to develop a low-cost wearable and wireless system for kinetic measurement of gait. A.K. et al. [120] have developed the flexible strap (inner periphery of the strap) using FSR for the recognition of five different locomotion modes such as level walk, ramp ascent, ramp descent, stair ascent, and stair descent. Park et al. [121] proposed a ground reaction force (optoelectronic force sensor) measurement system and compared with FSR to measure Ground reaction force (GRF) produced by the user for gait recognition. Sayed et al. [122] presented the prosthetic knee movement approach using two FSR on specific anterior and posterior sites of the socket's wall. FSR showed less variation during different locomotion (sit, stand, stair ascent) states. D. Van et al [123] proposed zero moment point (ZMP) based sensory reflex control of a humanoid Robot using FSR sensor inside the sole area of support foot. H. Saddati [124] used ZMP to control the biped humanoid robot obtained from FSR sensors attached to the sole. However, Amft et al. [125] first proposed the use of FSR to acquire the FMG signal. Two FSR were used on the forearm to visually determined (FMG) four types of arm movements on a data plot. Tura et al. [126] in 1998 designed a sensory control system using FSR for an upper limb myoelectric prosthesis. Wang et al [127] presented the biomechatronic approach "development of multi-fingered hand prosthesis using FSR". The hand developed has a cambered palm and five fingers. The configuration of the fingers is shown in Figure 7. Ten FSR used in the finger gives the 9 grasp pattern and this design is considered as small in size, lightweight and looks more like human hands. Luke Osborn et al. [128] in 2013 designed and presented the biomimetic grasping control of hand prosthesis. To provide the valuable tactile feedback FSR and Barometric sensors were placed on a prosthetic hand. Myo-electrically- operated RFID (radio-frequency identification) prosthetic hand (MORPH) has been used to control the movement of the prosthesis. RFID tags have been used to switch between different controls strategies and have shown a successful result. FSR resistor namely Flexiforce (Tekscan, South Boston, USA) was used to monitor 110N of grasping forces. FSR is further coated with silicone to enhance the prosthetic hand grasping functionality. It is fixed to the index finger of a prosthetic hand using finger cuffs. Experiments such as power grasp, picking up, holding, and releasing and slip detection were performed. FSR due to the characteristics of low sensitivity responded only to the power grasp experiment performed to grab polyvinyl chloride (PVC) pipe.

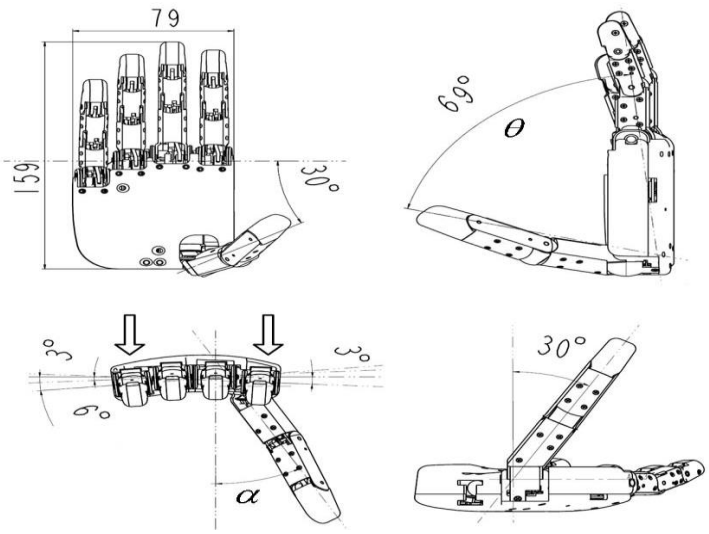

Figure 7 Configuration of fingers with palm [127]

Abdul et al. [129] presented a biomechatronics approach to the design and production of low cost, good cosmetic appearance, functional and users friendly robotic arm namely Artificial Hand Gripper(AHG). These robotic arms consist of shoulder, arm, elbow, forearm, wrist, and hand. FSR is used in five artificial fingers covered by a smart glove, which also makes the AHG capable to evaluate the strength of the patient's hand grasp. Sadarangani and Menon [130] used FSR to detect the forces (steady-state) generated by muscles at the forearm. Three FSR attached to flexible foam band designed with Velcro connectors (to secure the sensing forearm) were used on the forearm. The distance gap between three FSR was 4.5 cm. These FSR sensors monitor the force from muscles and these forces are characterized as grasp or neutral hand. Hsiao et al. [131] designed sleep posture recognition for the upper part of the body using FSR sensors (record the pressure distribution). Stefanou et al. [132] demonstrated a motion intent recognition in stroke patients using FSR sensors. This paper presents two FSR sensors used to detect low activations of muscle in stroke patients with no more than 6.45% of input (average nominal strength). After classification (binary) the arm shows better performance than hands. Mohd Ali et al. [133] presented a low-cost and accessible robotic exoskeleton for arm rehabilitation. Developed exoskeleton with two degrees of freedom consists of FSR to measure muscle activities during the rehabilitation process. FSR is attached to the biceps and forearms of the subjects to note the muscle excitation during rehabilitation. Shahrul et al. [134] considering the hypothesis that among five fingers of a hand, the thumb plays an important role. So to help the amputees with thumb loss due to a traumatic accident, investigation on the development of more natural controlled prosthetic thumb was performed. The comparison between the EMG signal and forces from the tip of thumb was performed. Though there are 9 muscles in thumb the EMG signal was acquired from thumb intrinsic muscles namely the Adductor Pollicis, Flexor Pollicis Brevis, Abductor Pollicis Brevis, and First Dorsal Interosseous. FSR is used to record the force from the thumb tip. Furthermore, (artificial neural network) ANN classifier in the form of Root Mean

square was used to capture the relationship between EMG signal and thumb tip force shows effective in developing a natural controlled artificial thumb. Nan et al. [135] with the hypothesis that to control the prosthetic hand with multiple degrees of freedom, control power of finger motions should be extracted from the human body. 32 FSR (Figure 8) was mounted in a prosthetic socket which is densely wrapped around the forearm (mostly middle of the forearm) using straps. These FSR are used to extract the pressure distribution to generate large variations of finger motion.

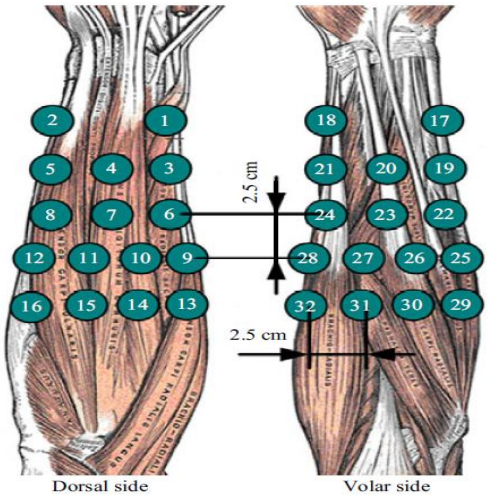

Figure 8 FSR placed in a prosthetic socket [135]

Razak et al. [136] presented the design and performance of the air splint prosthetic socket system (a combination of Air splint system and pressure sensor). FSR pressure sensor was placed inside the air splint socket to determine to require size and fitting for the socket used. As well as pressure sensor detects the pressure applied between the stump limb and the air splint. Xiao and Menon [137] proposed a wearable and low-cost FSR strap to acquire FMG signals from upper limb amputees. Eight FSR were placed on the forearm (proximal portion) to capture the main muscle activities. Azman et al. [138] presented the FSR sensors to monitor the muscle fatigue by detecting the variations of force exerted by the muscle. Chegani and Menon [139] in 2017 had used band designed with 16 FSR to acquire force myography signal (FMG) as shown in Figure 9. Acquired FMG was used to evaluate the angle between the fingers (index, middle fingers with the thumb) while performing three different hand movements (power grasp, tripod, and index-thumb pinch grasp) in three different locations (to cover the workspace where no bending of the elbow is required). Erina et al. [140] explored the use of FMG using FSR as a potential alternative for sEMG. The real-time experiment on trans-radial amputees using a commercially available robotic hand and Bebionic was performed. Among 11 different grips pattern, 6 primary grips pattern such as, relaxed, open palm, power, tripod, finger point, a key which is considered as important for a daily living gave an accuracy of more than 70% using FMG.

Figure 9 (Left) FSR Band placed on arm. (Right) FSR band [139]

Muhammad et al. [141] to solve the problem of obstructive and bulky haptic feedback prosthetic devices FSR has been used. To get a better grip FSR was used on index finger and to hold it adhesive tape has been used. Daniele et al. [5] presented FSR as an alternative to sEMG electrode to measure muscle contraction. The experiment was performed on five healthy subjects (wore the prosthesis) using force signals acquired from FSR to implement a proportional control strategy for a prosthetic hand. The subjects were asked to perform a predefined task (grabbing objects, pouring water, catching a flying ball) after a short training. All the subjects performed the task successfully with FSR.

As reported, some previous studies have been done on the use of force-sensitive resistors (FSR) to acquire information about muscle activity, finger movements. However, they could only provide qualitative results or simple information about on-off muscle activation. These (FMG) methodologies though proved to be feasible for monitoring upper-limb amputees, but still, need real-time implementation.

2.3 Research gap and future prospects

With technological advancement, purely appearing prosthesis has gained more and more functionality over the years. Although the prosthesis nowadays provides a lot of movements, otherwise known as Degrees of Freedom (DOF) for amputees, there are still some challenges that need to be addressed for the real-time EMG based control for hand prosthesis. The real-time usability of available multiple DOF prosthesis is impacted by various factors such as intuitiveness of device, comfort, appearance, function, durability, and cost. Furthermore, there are some other compounding factors as well, which are explained in Table 4.

Table 4 Some of the challenges of real-time EMG based control of hand prosthesis [81]

Challenges	Description
Comfort	The socket that is the part of the upper limb prosthesis may interfere with the elbow (a function of the residual joint). If the socket does not fit correctly, the patient may suffer from pain, sores, and blisters. Such prosthesis will experience heavy and cumbersome [142]. Even some prosthesis with appropriately designed of sockets, face the problems with heat, sweating, and chafing.
Appearance	Most of the developed upper-limb prosthesis does not look natural in appearance. Also, the user finds the prosthesis uncomfortable to wear. The user is still unable to control the multiple degrees of freedom simultaneously and consistently.
Function	Nowadays, upper limb prosthesis performs almost every day activities. However, still, it is challenging to obtain opening and closing positions of hand from the residual limb. It is because residual muscles often used for hand prosthesis are biceps and triceps, which do not convey to the closing and opening of hand [143].
Durability	Many of the upper limb prostheses are heavy and have short battery life.
Cost	Upper limb prosthesis costs around $50,000, which is quite hard to afford by amputees from all over the world.
Technology	Developed prosthetic devices are still lack of intuitiveness and reliability between user motion volition and real motion of prosthesis. Similarly, much training needed to operate those prosthetic hands.
Processing delay	The embedded processor used exhibits some delay (around 3 sec), which halt the acquisition of EMG for that delay period.
EMG interferences	The transient changes in EMG often result from external interferences, changes in electrode impedance, muscle fatigue, and electrode shift, among others. During practical use, this transient change arising from variations (long and short-term) in the acquisition environment caused degradation of the clinical vitality of the device and limited its users' adoption [16].
Electrode displacement (shift)	Electrode displacement occurs each time when users use prosthesis, electrodes slightly reconcile in a different position relative to underlying musculature. When the user performs some task, due to the loading and positioning of limb, movement of electrode occurs. Such an electrode shift can lead to a change in EMG characteristic (recording) of limb and thus make it difficult to decode the movements [144].
Amputee movement	EMG signal from the limb position is mostly recorded when the user is in a static position (sitting), but in a real-time scenario, prosthesis users have to use the device in a different position (walking, climbing stairs). As the variation in limb position effect the classification performance of EMG-PR [145].
Muscle contraction forces	While performing everyday activities, the same limb assists different muscle contraction forces across different conditions. Thus, the variation in muscle contraction force occurs due to the same targeted limb results in myoelectric signal pattern classification inconsistency. Hence it effect the EMG-PR control of prosthesis [44].
Limb position variation	Variation in limb position occurs while performing a different action in everyday life. For upper-limb amputation, the effects are seen on residual muscle (located in a prosthetic socket) from which the EMG signal is collected. Also, various limb position leads to the variation in gravitational force which leads to the displacement of target muscles. These factors cause variation in EMG signal pattern affecting the EMG-PR control of prosthesis performance.

2.3.1 Future prospects-implementation of real-time EMG based control

- Electroencephalogram (EEG), and Electrocorticogram (ECoG) measures brain signal, and they could be used to supersede EMG for prostheses control. ECoG electrodes are invasive as they are placed directly inside the head whereas, EEG electrodes are non-invasive as they are positioned

on the scalp area [146] where information regarding the targeted body movements are measurable [147]. EEG and ECoG currently found application as a brain-machine interface [148] and in theory, can control the movement of the prosthesis similar to the EMG. In other words, while EMG measures the electric current from muscle and provides the control signal according to the action intended by subject [149], brain-machine interface decodes the electrical signal generated from the brain and converts them to the control signal for the control of prostheses [150] without using muscle as an intermediate [146]. Unfortunately, due to the invasiveness (ECoG) and the problem associated with electrodes montage stability (EEG), generalized poor signal-to-noise ratio (SNR), the poor spatial resolution of the signals, not to mention the discomfort related to the need of having multiple devices over the subject body (i.e. head and limbs) these kind of devices, we believe, at present times, may be better suited for patients with spinal cord injury where voluntary EMG signals may be not available. It is necessary to mention that another issue often related to the use of brain signals to drive external devices is the need for extensive training [151] [152] and poor performances of the brain to computer interface.

- The prosthetic control unit should be increased, and appropriate pattern-recognition should be used for proper handling of the prosthetic device.
- The prosthetic device should be developed using low-cost materials, affordable to all amputees.
- Intuitiveness can be developed by extracting the signals using ultrasound imaging [153], force myography (FMG), TMR, and Implantable myoelectric sensor [154].
- One possible way to minimize or to eliminate this drawback of EMG interferences is to develop an electromagnetic shielding technique [16] and implement the best filtering strategy.
- Rather than depending on existing proposed training, an intelligent adaptive prosthetic system should be developed and implemented. An intelligent EMG-PR system requires to represent a data stream accurately in real-time. It shows a possible way to restrict the deficiency in the prosthesis market. With such developments, users' expectations can be meet and thus increase device adoption for everyday use.
- Feature extraction is known as a core of conventional EMG based Pattern recognition control. To achieve the real-time usability of prosthetic, issues related to the feature extraction should be addressed. The deep learning (machine learning method based on ANN) may be one possible way to solve the problem of feature extraction [16]. So more research on deep learning in pattern recognition-based prosthesis control should be conducted.

Among the many possible future implementations, one of the solutions to develop intuitiveness and overcome the other drawbacks of EMG electrodes is using FSR (force myography). The experimental outcomes of comparison of FSR and EMG are explained below in detail. The following sections describe the methods and materials and outcomes of the experiment.

3. Methods and Materials

3.1 Methodologies

To compare the raw FSR output signal and EMG-LE signal, we have used the raw FSR signal (without signal processing) and the raw EMG signal has gone through some signal processing to form the EMG-LE. Raw FSR was compared with EMG-LE in aspects (sample rate, computational power) to overcome the drawbacks of EMG. The methodology implemented to execute the goals of this research has been outlined in Figure 10 and has been described accordingly in the following section.

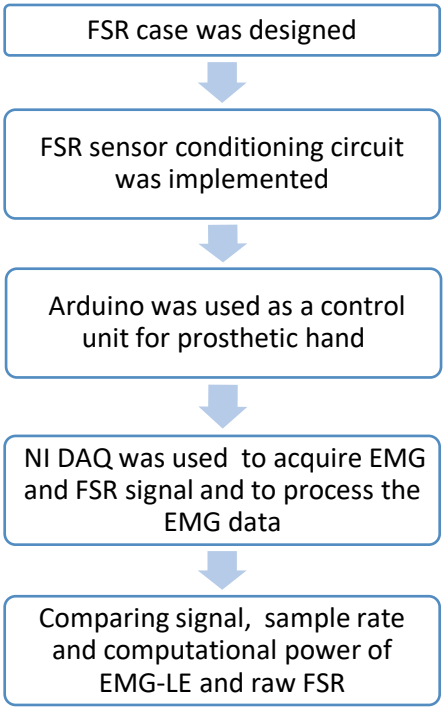

Figure 10 Methodology

3.1.1 Sensor Design

Force Sensitive Resistor made up of conductive polymer was modified to work as a force sensor. From the literature [5] it is quite clear that the bare FSR sensor on the skin does not give appropriate results [155]. It is unstable and provides variable outcomes. To solve this problem, the FSR 3D case (covering) was designed. The case was designed on Auto-cad and printed using Polylactic acid (PLA) as shown in Figure 11. The upper covering of FSR, dome-shaped was designed so that the pressure is uniformly distributed on the FSR and Velcro wrap can be placed. The dome-shaped covering of FSR also gives reliable mechanical coupling within the FSR sensitive area. The lower case was designed to hold the EMG electrode cables, which work as a connector for a disposable electrode. As shown in Figure 12 FSR is situated just above the EMG electrode. Since three FSR are used, the same case was designed for all of them. All this assembly was held on biceps using a Velcro wrap as shown in Figure 12. Furthermore, the sEMG raw signal was acquired from

Myoware muscle sensor to further process it for EMG-LE whereas FSR raw signal was acquired using FSR interlink 402.

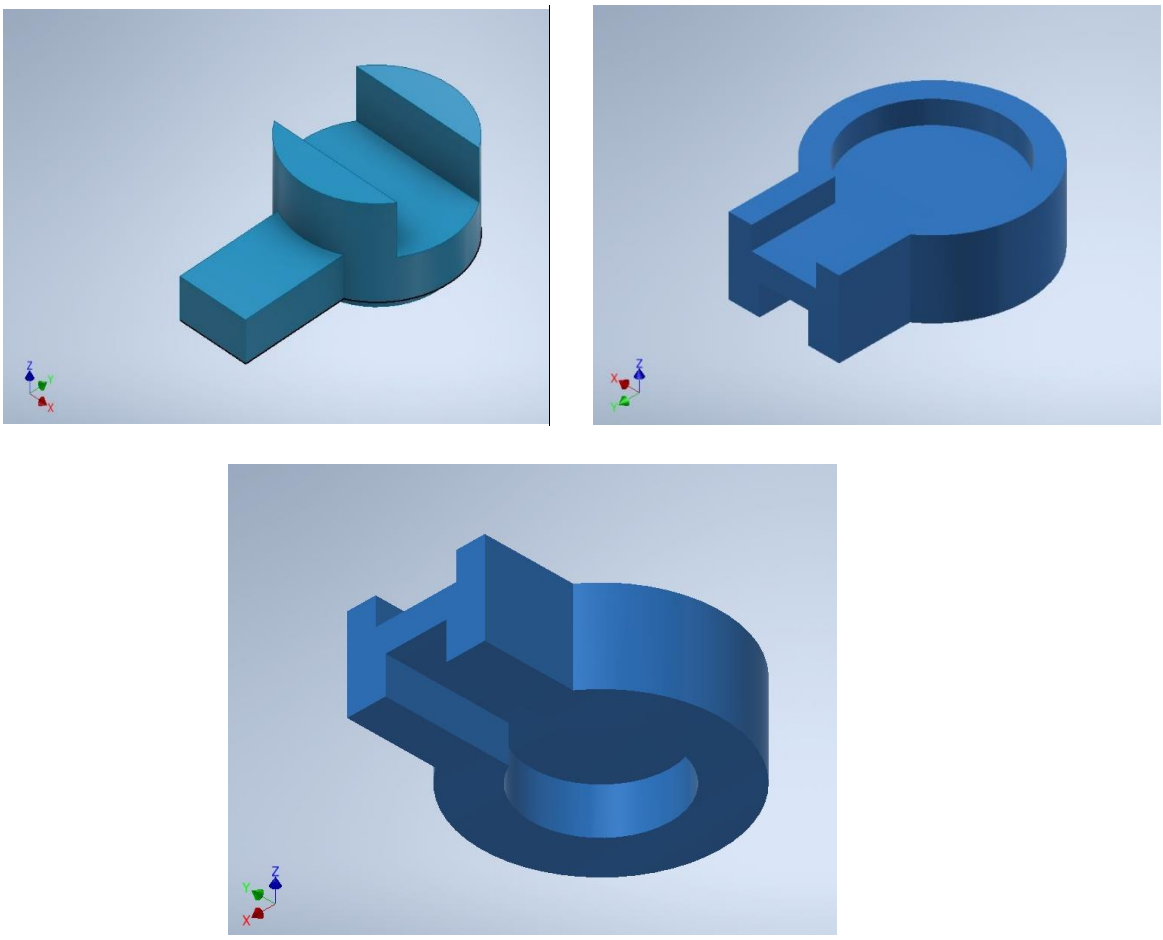

Figure 11 FSR case (Top left) Upper case of FSR. (Top right) FSR holder (Bottom) EMG cable holder

Figure 12 Three FSR's placed on biceps to acquire a signal

3.1.2 Sensor conditioning

FSR is a form of a polymer (insulating) matrix, which consists of conductive particles. These conductive particles remain in the scattered form within the polymer [156]. For a certain time, if a constant load is applied to the force-sensitive resistor; mechanical creep arises as a result of the rheological characteristics of the polymer. This creep affects electrical resistance and the inter-particle separation of FSR [5]. Results of which lead to the output drift of the sensor. Design an appropriate sensor conditioning thus help to reduce the output drift of the sensor.

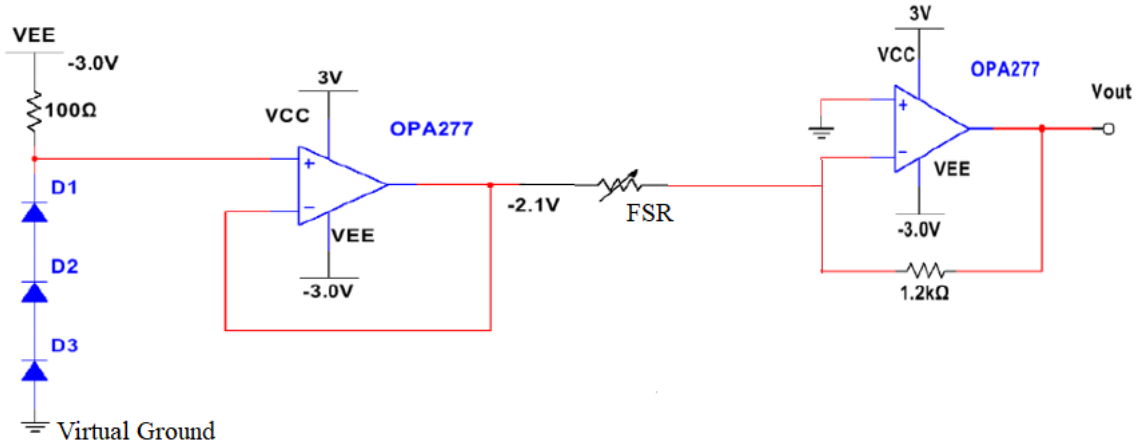

Figure 13 Signal conditioning circuit, provides constant voltage to FSR sensor

The circuit in Figure 13 provides a constant voltage of 2.1 V to the FSR sensor. Furthermore, a trans-impedance amplifier was used to measure the resistance change in FSR. The constant voltage supply is important to reduce the output drift across the FSR and also provide the signal almost proportional to the force applied to it.

3.1.3 Signal Acquisition and Data Processing

Five healthy subjects were involved in the experiment which consists of two females of 32 and 33 years old and three males of 32, 39 and 45 years old respectively. The sEMG and FSR signal was simultaneously acquired from the subjects while performing different gestures. For this experiment water bottle of 900ml, 750ml, 600ml of the volume was used. Each subject involved in the experiment was asked to lift the water bottle of different volumes and drop (return to rest). The duration of the experiment for performing each volume was set for 25 sec. This exercise of lifting and dropping was done five times within the set duration.

The raw sEMG obtained using Myoware, and three FSR sensors output were acquired using Arduino and NI USB 6002 DAQ. Arduino was used as a control unit for the signal. The acquired signal from both EMG and FSR was first analysed using Arduino. The computed EMG RMS (from raw EMG) was processed to obtain EMG-LE using MATLAB. EMG-LE was obtained for each sequence of contractions (three). The total of three contractions was manually selected from FSR signal and compared it to the EMG-LE signal. Since three FSR were used, single FSR and its

combination FSR1, FSR3, FSR1+FSR3, FSR1-FSR3, FSR1-FSR2 were considered for the assessment of FSR and EMG-LE. As a whole correlation between FSR and EMG-LE was evaluated for 45 contractions. Furthermore, the chart showing the signal acquisition and data processing implemented to execute the goals of this research has been outlined in Figure 14 accordingly.

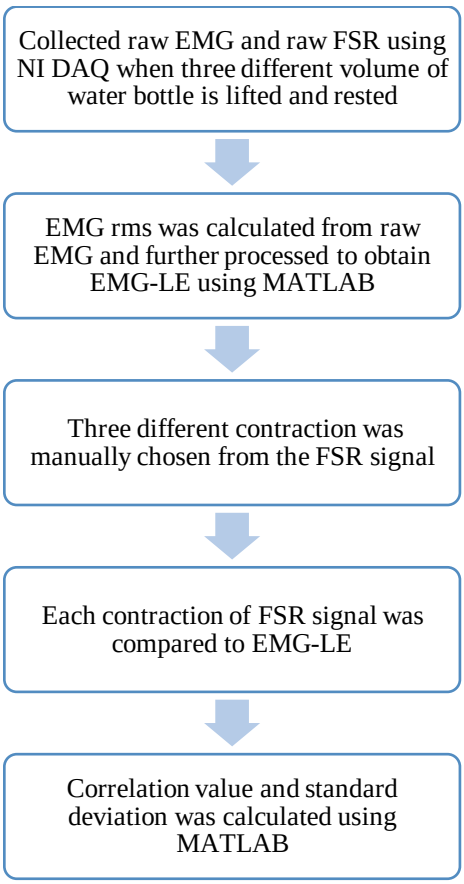

Figure 14 Outline of signal acquisition and data processing

3.1.4 Sample rate and computational power of FSR and EMG-LE

The raw EMG signal requires processing to compute the EMG-LE whereas FSR is used without any signal processing. The sample rate and computational power are connected to each other. With the high sampling frequency, the execution of the system requires high computational power simply because many samples are to be accumulated and processed at once. To show the relationships between sample rate and computational power and their effects on FSR and EMG-LE signal is explained here in this section. The outline of the process involved in evaluating the sample rate and computational power of these signals is shown in Figure 15 assuming for EMG a sample rate of 10 kHz and due to the frequency content of the FSR [5] being very limited, a more appropriate 100 Hz as sample rate for the FSR; both signals are assumed to be quantised with a 16-bit depth.

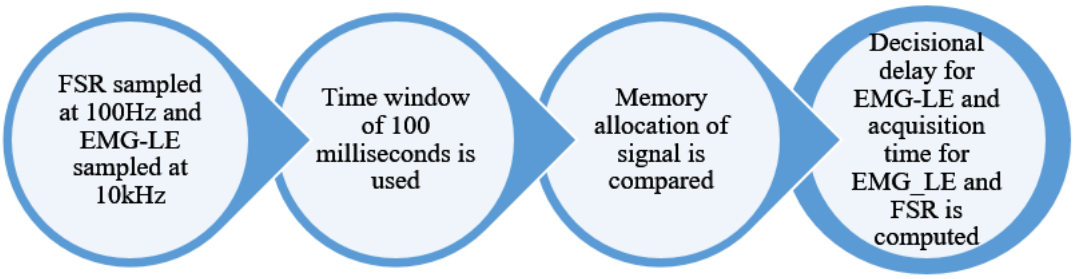

Figure 15 General outline carried out to compare the sample rate and computational power of signals

3.1.5 Control of prosthetic using raw FSR signal

This process was carried out to achieve the main purpose of this study, to provide an alternative to EMG-LE for the suitable control of prosthesis. To show that electrode less EMG can control the prosthetic following methodologies has been carried out:

- We have designed 3-D claw (2 fingers prosthetic hand) for the experiment (Figure 16) which was powered using one servo motor.
- The signal to control the claw has been acquired from biceps bacchii using FSR sensor.
- Arduino was used for signal acquisition and control unit for the whole system.
- Subject was asked to lift and drop 900ml of water bottle to attain contraction.
- The control of 3-D prosthetic hand depends upon the intensity of contraction. The working principle of this prosthetic hand has been outlined below in Figure 17.

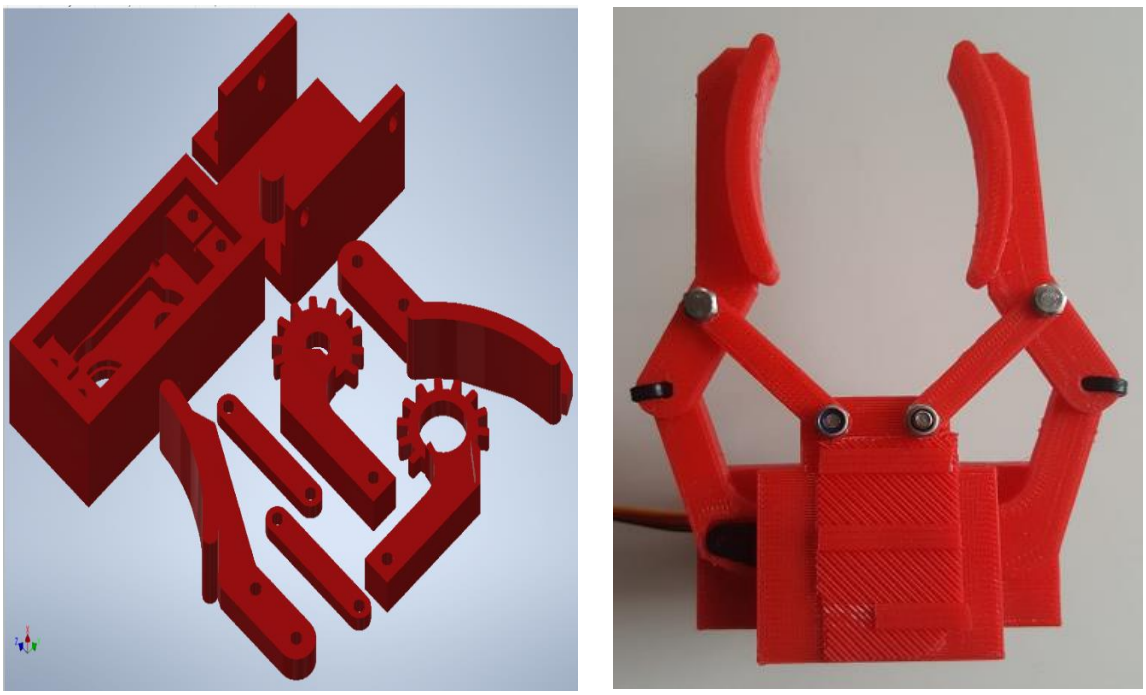

Figure 16 3-D claw with its designing components (left side) and 3-D claw (right side)

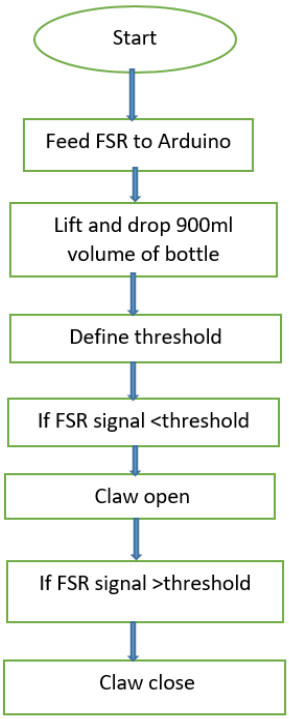

Figure 17 Outline of general algorithm to control 3-D claw

3.2 Component used in projects

The design and implementation include a hardware section and a controlling software part. The details about each component are presented below.

3.2.1 Force sensitive resistor (FSR) interlink 402

A combination of resistor and sensor forms a force-sensing resistor. It is a special type of resistor whose resistance change with force or pressure applied to it. With an increase in pressure applied, the resistance of FSR decreased. The FSR is generally made available as a polymer sheet or ink which is applied as screen printing. Sensing film contains both the electrically-conducting and non-conducting particles. These particles (sub-micrometer) are formulated for reducing the temperature dependence and improving mechanical properties with increasing surface durability. The FSR is thin in size (less than 0.5 mm) and has good shock resistance. It could be used to measure muscular activities by monitoring the muscles. It measures muscle bulge directly. It is inexpensive and can be used externally. It requires no or little signal processing [157].

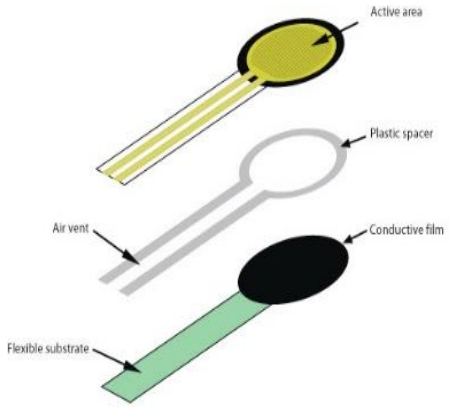

Figure 18 Force sensitive resistor [5]

3.2.2 Myoware muscle sensor

Myoware™ v3 board is the EMG sensor from Advancer Technologies. Myoware can be operated with a single voltage supply. EMG electrode embedded within it makes it easy to wear [158]. Myoware directly gives the EMG-LE and Raw EMG out. Some more specification of Myoware is shown in Table 5.

Figure 19 Myoware muscle sensor[158]

Table 5 Specification of EMG module

Myoware™ V3 specification	
Voltage	+3.1v to 6.3v
Gain (Adjustable)	0.01Ω to 100kΩ
EMG envelope	0v to +vs
Raw EMG	0v to +vs
Input Impedance	110GΩ
Supply current	Max 14 mA
The common-mode rejection ratio	110
Input Bias	1 pA

3.2.3 NI DAQ

Data acquisition (DQ) consists of a sensor, DQ hardware, programmable software. It measures electrical or physical events such as voltage, current, temperature, and pressure. NI DAQ 6002 measures, acquire, analyse, present and manage the measurement data [159].

Table 6 Specification of DAQ device

NI USB 6002	
Resolution	16 bit
Maximum sample rate	50 kS/s
CMMR	56 dB
Bandwidth	300 kHz

3.2.4 Arduino Uno

Among many control units available in the market, Arduino is one of the cheapest and low power consumption microcontroller or a control unit for the control of the prosthesis. Arduino Uno consists of all components needed to aid the microcontroller. It just needs a computer to connect through its USB cable or power (ac/dc adapter or battery) to get started. Uno does not use the FTDI USB-to-serial driver chip. Arduino Uno is a compact, breadboard-friendly, and complete platform based on the ATmega328 MCU [160]. It is a portable microcontroller which works with a Mini-B type USB cable. It can be simply programmed in respective embedded C or C++ language. It is inexpensive and easy to use a controller for the beginners. It is more flexible even for advanced users due to its clear programming domain with the extensible hardware and software environment [40].

Figure 20 Arduino Uno [160]

Table 7 Specification of Arduino Uno [160]

Microcontroller Board	**Nano**
Controller	Atmel ATmega328
Ceramic resonator/ clock speed	16MHz
Digital I/O's pin	14
Analog Inputs	6
PWM's	6
Operating Voltage	5V
Max supply voltage	6-20V
Flash memory	16 KB (2 KB boot loader)
SRAM	2 KB
EEPROM	1 KB

3.2.5 Operational Amplifier 277

This operational amplifier is the improved version of OP-177 (improved noise, wider output). It is also called as a high precision operational amplifier. They operate twice as fast with the quiescent current. OPA277 is simple to use, free from phase inversion and overload problems. They maintain stable unity gain and provide excellent dynamic behaviour over a wide range of load conditions [161].

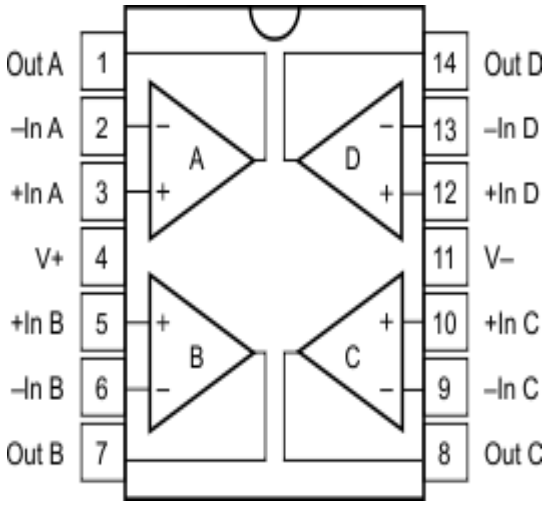

Figure 21 Operational Amplifier OPA4277 [161]

Table 8 Features of OpAmp

Features	
Ultralow offset voltage	10 µV
Ultralow Drift	±0.1 µV/°C
High Open-Loop Gain	134 dB
High Common-Mode Rejection	140 dB
High Power Supply Rejection	130 dB
Low Bias Current	1-nA maximum
Wide Supply Range	±2 V to ±18 V
Low Quiescent Current	800 µA/amplifier

4. Results and Discussion

4.1 Real-time EMG based pattern recognition control of hand prosthesis review

The first pattern recognition control scheme was developed in late 1960. By the 1980s, the approach was more refined by extracting features using autoregression from a smaller number of input channels. This allowed greater accuracy (nearly 86%) but was unable to achieve that in real-time. At the beginning of the 1990s, pattern recognition and its accuracy were improved further with artificial neural networks. Then the methodology was shifted to the analysis of real-time scenarios with a continuous shrinkage to permit precision of roughly above 92%. The inclusion of real-life constraints and reduction of dynamic error were large discussions after the late 1990s. Since then, most of the studies attempt to achieve a perfect natural level control in myo-prosthesis by the selection of appropriate classifiers and post-processing techniques. It is obvious that the popularity of pattern recognition methods keeps on increasing, and the research studies are evolving into more natural control of artificial arms. A sudden increase in pattern recognition control can be visible from the year 2000 onwards. Though there are some fluctuations in the level, with the change in computing capability of processors, the interest in research on pattern recognition has risen and shown major turn since 2010.

There are still many challenges to implementing real-time prosthesis, mainly in a wearable embedded system. First, a solution scheme involves a re-training PR classifier. Presently, this process includes the restructuring of the training feature matrix, the estimation of variables in the pattern classifiers, and then forming new organization of the testing feature vectors. It is unknown if the embedded system can control all this approach fast enough for each decision. Second, many components are incorporated into the EMG-PR algorithm; the interaction between the components and the precise time control is critical.

At last, it requires a compact combination of all components of the embedded PC. The system requires to provide the interfaces needed for the collection of data, sufficient computing power for decision making in real-time, effective memory management, and low energy utilization [99]. All of the above-mentioned challenges are less explored.

Most of the above said articles tried to analyse and use repeated data by setting ideal clinical conditions for classification error and accuracy. Moreover, the real-time articles mostly tested their results with able-bodied subjects. In real amputee life, some unwanted, unrealistic repeatable contractions can be observed from myo-signals during classifier learning. Those considerations were the least discussed and identified. When a user is asked to perform several activities under real-life conditions such as varying size loads, orientation, and weather, the classification error in the real-life scenario is high from their equivalent able-bodied subject. It is also clear that pattern recognition

systems have yet to obtain an extensive application for numerous reasons such as 1) the absence of good user interface 2) uncertainty in classification accurateness and control, and 3) variations in patterns over the period. The previous studies have shown practical achievements for the control of ULPs. Together with achievement, the advancement of inaccurate classification and speed from a reliable command method is enough to process with less time, less error, and minimum mental effort. While many classification schemes have been analysed, generally the feature identification methods are stuck to time-domain features and are often paired with LDA classifier.

Moreover, none of the pattern recognition systems have been found to be 100% precise. The wrong classifications need to be alleviated to make a myoelectric pattern recognition control as a valid choice for an amputee. Otherwise, users become frustrated, unsuccessful at completing a task due to unintended prosthesis movement. Ultimately, this can lead to the rejection of the device itself.

4.2 On the sample rate and computational power of FSR and EMG-LE

The results were obtained while comparing the size of raw EMG and EMG-LE at 10 kHz sampling frequency and FSR at 100 Hz of sampling frequency for a time window of 100 milliseconds as shown in Table 9. The table shows the number of samples EMG, EMG-LE and FSR has to store and data space they occupy considering the data depth of 16 bits.

Table 9 Memory burden comparison per signal

Memory	**Raw EMG + EMG-LE**	**FSR**
Samples numbers	1000 + 1000	10
16 bits depth	2000 + 2000	20

While both types of controllers will incur on a decisional delay generated by the final algorithm measuring the samples and deciding which action to take, the use of EMG-LE will incur in the linear envelope calculation delay, this delay is estimated with the MATLAB timer on the computer. The progressed time obtained while computing EMG-LE from raw EMG is 0.04 seconds and the proceeding time required for it to run on the Arduino requires 0.16 seconds, to this delay, as mentioned, a further delay is to be added. For the FSR that does not require any signal processing and time required for it to run on Arduino need only 0.14 seconds. In summary, the controller using EMG linear envelope, when considering a time window for the acquisition of 100 milliseconds can take five decisions per second; while the controller using the FSR can take seven decisions per second. Similarly, prosthesis controller using EMG-LE has to store 1000 samples whereas one using FSR has to store only ten samples.

4.3 Comparison of raw FSR and EMG-LE

The results were obtained while performing the predefined task (lifting and dropping of a different volume water bottle) of different intensity and duration by five healthy subjects. The raw EMG signal and FSR output signal was simultaneously recorded. The raw EMG signal was further processed to obtain EMG-LE. One of the examples of computed EMG-LE with a raw FSR output signal is shown in Figure 22. The contraction from zero to eight seconds is noted. Two contractions shown in the figure shows a good match between EMG-LE and raw FSR signal.

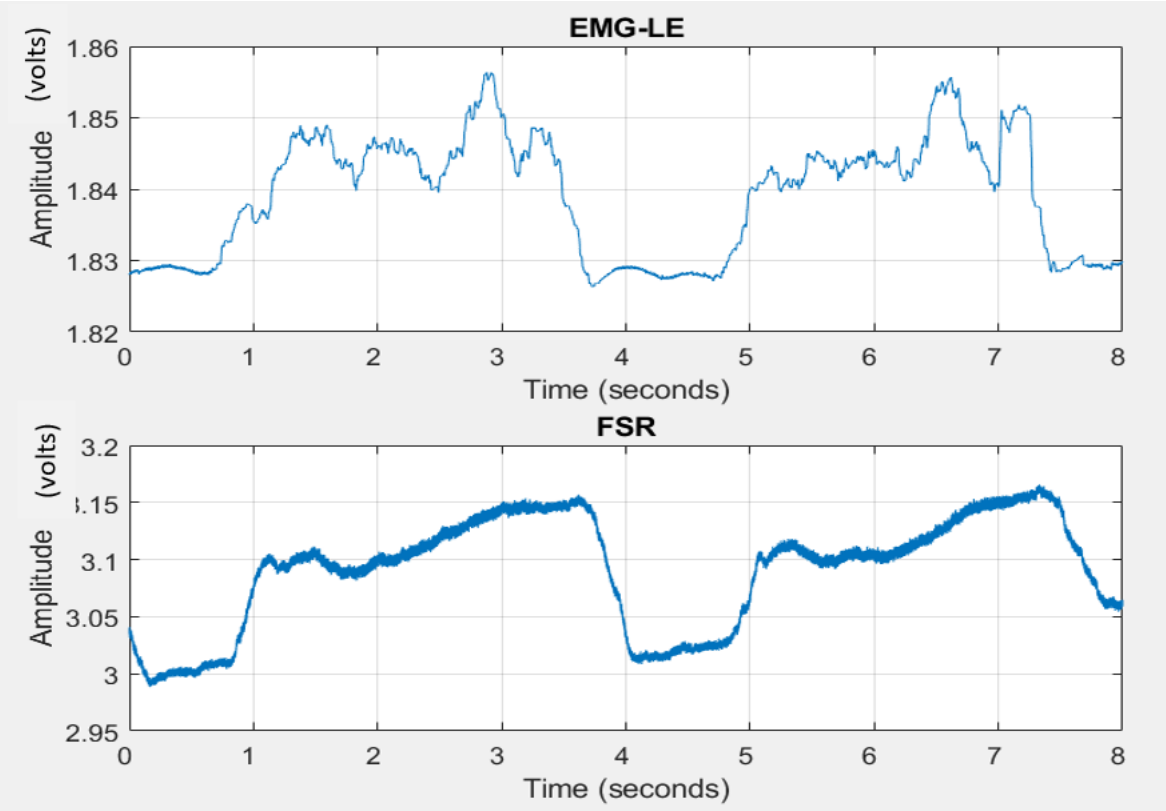

Figure 22 Simultaneous recording of signal EMG-LE and Raw FSR while lifting and resting of water bottle

To measure the quantitative similarity between EMG-LE and FSR signal, the mean (μ)correlation coefficient was computed. Similarly, to measure the amount of dispersion of values obtained from correlation standard deviation (SD) is computed. The computed average correlation coefficient and standard deviation are mentioned in Table 9. A total of 45 contractions were computed separately.

Table 10 Computed correlation and standard deviation

Subjects	Sensors and combination	Correlation		
		600ml	**750ml**	**900ml**
		Mean value	**Mean value**	**Mean value**
1	FSR1	0.84±0.03	0.91±0.02	0.93±0.03
	FSR2	0.82±0.09	0.89±0.03	0.92±0.03
	FSR3	0.83±0.04	0.87±0.03	0.87±0.08
	FSR1+FSR2	0.80±0.08	0.85±0.08	0.89±0.04
	FSR2+FSR3	0.81±0.08	0.81±0.09	0.85±0.04
	FSR1+FSR2+FSR3	0.81±0.07	0.87±0.03	0.89±0.05
2	FSR1	0.92±0.04	0.81±0.05	0.90±0.07
	FSR2	0.87±0.05	0.87±0.08	0.85±0.04
	FSR3	0.80±0.08	0.88±0.03	0.91±0.08
	FSR1+FSR3	0.89±0.07	0.81±0.08	0.86±0.04
	FSR2+FSR3	0.81±0.05	0.81±0.03	0.85±0.08
	FSR1+FSR2+FSR3	0.80±0.05	0.85±0.06	0.84±0.07
3	FSR1	0.87±0.04	0.87±0.04	0.85±0.04
	FSR2	0.90±0.05	0.91±0.05	0.87±0.05
	FSR3	0.85±0.08	0.88±0.08	0.80±0.08
	FSR1+FSR3	0.90±0.07	0.87±0.07	0.86±0.07
	FSR2+FSR3	0.88±0.05	0.85±0.05	0.86±0.05
	FSR1+FSR2+FSR3	0.89±0.05	0.87±0.05	0.85±0.05
4	FSR1	0.90±0.04	0.89±0.04	0.94±0.03
	FSR2	0.86±0.05	0.88±0.05	0.94±0.03
	FSR3	0.86±0.08	0.85±0.08	0.84±0.08
	FSR1+FSR3	0.88±0.07	0.82±0.07	0.92±0.07
	FSR2+FSR3	0.84±0.05	0.86±0.05	0.91±0.05
	FSR1+FSR2+FSR3	0.87±0.05	0.88±0.05	0.92±0.05
5	FSR1	0.81±0.04	0.83±0.04	0.89±0.04
	FSR2	0.81±0.05	0.83±0.05	0.87±0.05
	FSR3	0.82±0.08	0.85±0.08	0.86±0.08
	FSR1+FSR3	0.84±0.07	0.83±0.07	0.88±0.07
	FSR2+FSR3	0.85±0.05	0.85±0.05	0.83±0.05
	FSR1+FSR2+FSR3	0.83±0.05	0.83±0.05	0.82±0.05

4.4 Towards the development of a suitable muscle sensor for prosthetic control

The results obtained using the FSR sensor show that simple prosthesis (3-D printed claw) can be controlled using an electrode-less FSR-LE signal. It should be noted, as we found (Table 10 Comparison of EMG- LE and FSR signal) that individual FSR can give a signal that is comparable to EMG-LE. Therefore, we have used one FSR to control the prosthesis.

Muscle contraction to control the prosthetic hand was achieved performing the task of lifting and dropping of 900 ml volume of water bottle. We believed that with different volumes (300 ml, 600 ml) we can achieve the proportionality of control. In order to prove this, we are still in the process of collecting more data. Although, this experiment shows the control of the limited movement (open and close of prosthetic hand), this design can be scaled up to more complicated devices for the implementation of multiple movements (degrees of freedom) and development of five fingers hand prosthesis.

5. Conclusion and Future directions

The brief introduction to EMG-PR techniques and explores the work done on real-time (amputee data, embedded, and virtual environment) myo-activated prosthesis based on pattern recognition control over the years are obtained through the literature survey. As well as some of the key techniques required for the improvement of existing real-time application of EMG-PR for hand prosthesis are presented. Although the perspective of intelligent pattern recognition control methods for the multiple degrees of freedom for hand prosthesis has been well investigated, their real-time usability is still being challenged by a number of compounding factors. Natural neuromuscular control of prosthesis should be proportional and investigate multiple degrees of freedom. However, while reviewing the existing literature, we have observed that the majority of real-time prosthesis uses EMG, particularly multiple channels targeting multiple residual muscles to generate multiple synchronous control signals. The challenges are even greater than a single degree of freedom due to the proximity of the muscles/electrodes etc. This should be well investigated in the future for real-time scenarios. Furthermore, to achieve real-time usability, appropriate design of the prosthetic device, virtual training, feature extraction, and classification techniques, should be properly investigated and implemented.

Electrodeless FSR-LE signal for measurement of muscle contraction has been presented in this thesis to overcome the drawbacks of EMG (skin surface preparation for placement of electrode, electromagnetic interferences, and high sample rate). The specific FSR sensor designing (with FSR case) and implementation of the FSR sensor conditioning circuit had provided a more constant and quantitative analysis of muscle contraction. FSR sensor is simple to use, low in cost and does not require any skin preparation for measuring muscle activities. It provides the signal compared to the EMG-LE without any signal processing. FSR is not affected by electromagnetic disturbances and is strong (robust). Moreover, the FSR sensor has successfully implemented to control the prosthetic hand (two fingers claw).

5.1 Future research Directions

During the period of my MPhil study, I have gained knowledge on EMG-based pattern recognition (machine learning) control and an alternative sensor to replace EMG that can be used to control the myo-activated prosthesis. From the review paper on real-time EMG-based pattern recognition control of hand prosthesis challenges and future implementation (peer-reviewed paper), the current state of real-time EMG based machine control for the development of myo-activated prosthesis and the area that need to be improved has been clearly understood. Henceforth, the experiment performed for the comparison of FSR-LE and EMG-LE (published paper) and the result obtained using FSR to control the prosthetic hand (open and close gestures) have shown that FSR signal can be used to control the myo-activated prosthesis with multiple degrees of freedom and

feedback to the user. To carry out further research for my Ph.D. study, I would like to use the concept of machine learning approach with FSR sensor together. Furthermore, to reduce the burden on that principal prosthesis controller, EMG can be processed in the FSR sensor together with other forms of muscle contraction signals i.e. Mechanomyogram (MMG).

References

[1] J. Lobo-Prat, P. N. Kooren, A. H. Stienen, J. L. Herder, B. F. J. M. Koopman, and P. H. Veltink, "Non-invasive control interfaces for intention detection in active movement-assistive devices," *J. Neuroeng. Rehabil.*, vol. 11, no. 1, 2014.

[2] P. Bifulco *et al.*, "A stretchable, conductive rubber sensor to detect muscle contraction for prosthetic hand control," *2017 E-Health Bioeng. Conf. EHB 2017*, vol. c, pp. 173–176, 2017.

[3] B. Hudgins, P. Parker, and R. N. Scott, "A new strategy for multifunction myoelectric control," *IEEE Trans. Biomed. Eng.*, vol. 40, no. 1, pp. 82–94, 1993.

[4] P. Bifulco, M. Cesarelli, A. Fratini, M. Ruffo, G. Pasquariello, and G. Gargiulo, "A wearable device for recording of biopotentials and body movements," *MeMeA 2011 - 2011 IEEE Int. Symp. Med. Meas. Appl. Proc.*, pp. 469–472, 2011.

[5] D. Esposito *et al.*, "A piezoresistive sensor to measure muscle contraction and mechanomyography," *Sensors (Switzerland)*, vol. 18, no. 8, pp. 1–12, 2018.

[6] G. R. Naik and H. T. Nguyen, "Nonnegative matrix factorization for the identification of EMG finger movements: Evaluation using matrix analysis," *IEEE J. Biomed. Heal. Informatics*, vol. 19, no. 2, pp. 478–485, 2015.

[7] L. Shaw and S. Bagha, "Online Emg Signal Analysis for Diagnosis of Neuromuscular Diseases By Using Pca and Pnn," *Int. J. Eng. Sci.*, vol. 4, no. 10, pp. 4453–4459, 2012.

[8] G. D. Gargiulo, P. Bifulco, M. Cesarelli, A. Fratini, and M. Romano, "Problems in Assessment of Novel Biopotential Front - End with Dry Electrode : A Brief Review," *Machines*, vol. 2, pp. 87–98, 2014.

[9] P. F. Pasquina, M. Miller, A.J. Carvalho, M. Corcoran, J. Vandersea, E. Johnson, Y.T. Chen, "Special Considerations for Multiple Limb Amputation," *Curr. Phys. Med. Rehabil. Rep.*, vol. 2, pp. 273–289, 2014.

[10] G. Marco, B. Alberto, and V. Taian, "Surface EMG and muscle fatigue : multi-channel approaches to the study of myoelectric manifestations of muscle fatigue Surface EMG and muscle fatigue : multi-channel approaches to the study of myoelectric manifestations of muscle fatigue." *Physiol. Meas.* **2017**, *38*, R27–R60.

[11] M. Tavakoli, C. Benussi, and J. L. Lourenco, "Single channel surface EMG control of advanced prosthetic hands: A simple, low cost and efficient approach," *Expert Syst. Appl.*, vol. 79, pp. 322–332, 2017.

[12] G. T. Popa and A. Name, "A stretchable, conductive rubber sensor to detect muscle contraction for prosthetic hand control," in *The 6th IEEE International Conference on E-Health and Bioengineering - EHB 2017*, 2017.

[13] M. Starr, "Myo armbands used to control prosthetic arm," *CNET Tech Culture*, 2016. .

[14] H. J. B. Witteveen, E. A. Droog, J. S. Rietman, and P. H. Veltink, "Vibro- and electrotactile user feedback on hand opening for myoelectric forearm prostheses," *IEEE Trans. Biomed. Eng.*, vol. 59, no. 8, pp. 2219–2226, 2012.

[15] H. Van der Linde, C.J. Hofstad, A.C. Geurts, K. Postema, J.H. Geertzen, J. Van Limbeek,"A systematic literature review of the effect of different prosthetic components on human functioning with a lower-limb prosthesis". *J. Rehabil. Res. Dev.* 2004, *41*, 555–570.

[16] P. Fang *et al.*, "Intelligent EMG Pattern Recognition Control Method for Upper-Limb Multifunctional Prostheses: Advances, Current Challenges, and Future Prospects," *IEEE Access*, vol. 7, pp. 1–1, 2019.

[17] G. R. Naik, A. H. Al-Timemy, and H. T. Nguyen, "Transradial Amputee Gesture Classification Using an Optimal Number of sEMG Sensors: An Approach Using ICA Clustering," *IEEE Trans. Neural Syst. Rehabil. Eng.*, vol. 24, no. 8, pp. 837–846, 2016.

[18] L. Bi, A. G. Feleke, and C. Guan, "A review on EMG-based motor intention prediction of continuous human upper limb motion for human-robot collaboration," *Biomed. Signal Process. Control*, vol. 51, pp. 113–127, May 2019.

[19] D. Yang, W. Yang, Q. Huang, and H. Liu, “Classification of Multiple Finger Motions during Dynamic Upper Limb Movements,” *IEEE J. Biomed. Heal. Informatics*, vol. 21, no. 1, pp. 134–141, 2017.

[20] A. Radmand, E. Scheme, and K. Englehart, “High-density force myography: A possible alternative for upper-limb prosthetic control,” *J. Rehabil. Res. Dev.*, vol. 53, no. 4, pp. 443–456, 2016.

[21] J. M. Hahne *et al.*, “Linear and Nonlinear Regression Techniques for Simultaneous and Proportional Myoelectric Control,” *IEEE Trans. Neural Syst. Rehabil. Eng.*, vol. 22, no. 2, pp. 269–279, 2014.

[22] E. Strait, “Prosthetics in Developing Countries,” American Academy of Orthotists & Prosthetists: Bethesda, MD, USA, 2006.

[23] F. Cordella *et al.*, “Literature Review on Needs of Upper Limb Prosthesis Users.,” *Front. Neurosci.*, vol. 10, p. 209, 2016.

[24] K. Bergman, L. Örnholmer, K. Zackrisson, and M. Thyberg, “Functional benefit of an adaptive myoelectric prosthetic hand compared to a conventional myoelectric hand,” *Prosthet. Orthot. Int.*, vol. 16, no. 1, pp. 32–37, 1992.

[25] M. M. C. Vidovic, H. J. Hwang, S. Amsuss, J. M. Hahne, D. Farina, and K. R. Muller, “Improving the robustness of myoelectric pattern recognition for upper limb prostheses by covariate shift adaptation,” *IEEE Trans. Neural Syst. Rehabil. Eng.*, vol. 24, no. 9, pp. 961–970, 2016.

[26] M. B. I. Raez, M. S. Hussain, and F. Mohd-Yasin, “Techniques of EMG signal analysis: detection, processing, classification and applications.,” *Biol. Proced. Online*, vol. 8, pp. 11–35, 2006.

[27] P. G. Jung, G. Lim, S. Kim, and K. Kong, “A Wearable Gesture Recognition Device for Detecting Muscular Activities Based on Air-Pressure Sensors,” *IEEE Trans. Ind. Informatics*, vol. 11, no. 2, pp. 485–494, 2015.

[28] Julie N. Côté, “Electromyography (Emg): Intro To the Muscle Activity Assessment Technique,” *Dir. OccupaPonal Biomech. Ergon. Lab*, 2015.

[29] “17.3 Control of muscle contraction | Introduction to Life Science | University of Tokyo.” [Online]. Available: http://csls-text3.c.u-tokyo.ac.jp/inactive/17_03.html. [Accessed: 17-Aug-2019].

[30] M. A. Geeves and K. C. Holmes, “Structural Mechanism of Muscle Contraction,” Annu.Rev.Biochem.,vol. 68, pp. 687-728, 1999.

[31] N. Nazmi, M. Abdul Rahman, S.-I. Yamamoto, S. Ahmad, H. Zamzuri, and S. Mazlan, “A Review of Classification Techniques of EMG Signals during Isotonic and Isometric Contractions,” *Sensors*, vol. 16, no. 8, p. 1304, 2016.

[32] S. Đorđević, S. Stančin, A. Meglič, V. Milutinović, and S. Tomažič, “MC Sensor—A Novel Method for Measurement of Muscle Tension,” *Sensors*, vol. 11, no. 10, pp. 9411–9425, Sep. 2011.

[33] M. G. Antonelli, P. Beomonte Zobel, and J. Giacomin, “Use of MMG Signals for the Control of Powered Orthotic Devices: Development of a Rectus Femoris Measurement Protocol,” *Assist. Technol.*, vol. 21, no. 1, pp. 1–12, Jun. 2009.

[34] J.-Y. Guo, Y.-P. Zheng, H.-B. Xie, and X. Chen, “Continuous monitoring of electromyography (EMG), mechanomyography (MMG), sonomyography (SMG) and torque output during ramp and step isometric contractions,” *Med. Eng. Phys.*, vol. 32, no. 9, pp. 1032–1042, Nov. 2010.

[35] M. Hulliger, “The mammalian muscle spindle and its central control.,” *Rev. Physiol. Biochem. Pharmacol.*, vol. 101, pp. 1–110, 1984.

[36] M. Dimitriou, “Human Muscle Spindle Sensitivity Reflects the Balance of activity between antogonistic muscles,” vol. 34, no. 41, pp. 13644–13655, 2014.

[37] P. Geethanjali, “Myoelectric control of prosthetic hands : state-of-the-art review,” Med. devices, vol. 9 pp. 247–255, 2016.

[38] P. Herberts,"Myoelectric Signals in Control of Prostheses: Studies on Arm Amputees and Normal Individuals", Acta Orthopaedica Scandinavica, vol. 40, pp. 1-83, 1969

[39] D. Bai, S. Chen, and J. Yang, "Upper Arm Motion High-Density sEMG Recognition Optimization Based on Spatial and Time-Frequency Domain Features," *J. Healthc. Eng.*, vol. 2019, p. 16, March 2019.

[40] G. D. F. Ulloa, N. Sreenivasan, P. Bifulco, M. Cesarelli, G. Gargiulo and U. Gunawardana, "Cost effective electro — Resistive band based myo activated prosthetic upper limb for amputees in the developing world," 2017 IEEE Life Sciences Conference (LSC), Sydney, NSW, 2017, pp. 250-253.

[41] R. G. E. Clement, K. E. Bugler, and C. W. Oliver, "Bionic prosthetic hands: A review of present technology and future aspirations," *Surgeon*, vol. 9, no. 6, pp. 336–340, 2011.

[42] J. ten Kate, G. Smit, and P. Breedveld, "3D-printed upper limb prostheses: a review," *Disabil. Rehabil. Assist. Technol.*, vol. 12, no. 3, pp. 300–314, 2017.

[43] N. Jiang, S. Dosen, and D. Farina, "Myoelectric Control of Artificial Limbs— Is There a Need to Change Focus?," *IEEE Signal Process. Mag.* vol. 29, pp. 12–15, 2012.

[44] E. Scheme and K. Englehart, "Electromyogram pattern recognition for control of powered upper-limb prostheses: State of the art and challenges for clinical use," *J. Rehabil. Res. Dev.*, vol. 48, no. 6, p. 643, 2011.

[45] J. He, D. Zhang, X. Sheng, and X. Zhu, "A comparison of open-loop and closed-loop adaptive calibration for pattern recognition based myoelectric control," in *2015 37th Annual International Conference of the IEEE Engineering in Medicine and Biology Society (EMBC)*, 2015, vol. 2015, pp. 1144–1147.

[46] C. Spiewak, "A Comprehensive Study on EMG Feature Extraction and Classifiers," *Open Access J. Biomed. Eng. Biosci.*, vol. 1, no. 1, pp. 17–26, 2018.

[47] M. . Paridah, A. Moradbak, A. . Mohamed, F. abdulwahab taiwo Owolabi, M. Asniza, and S. H. . Abdul Khalid, *We are IntechOpen , the world ' s leading publisher of Open Access books Built by scientists , for scientists TOP 1 %*, vol. i, no. tourism. 2016.

[48] J. L. Betthauser *et al.*, "Limb Position Tolerant Pattern Recognition for Myoelectric Prosthesis Control with Adaptive Sparse Representations from Extreme Learning," *IEEE Trans. Biomed. Eng.*, vol. 65, no. 4, pp. 770–778, 2018.

[49] K. Englehart and Hugdins.B, "A robust, real-time control scheme for multifunction myoelectric control," *IEEE Trans. Biomed. Eng.*, vol. 50, no. 7, p. 848, 2003.

[50] K. Englehart *et al.*, "A Gaussian Mixture Model Based Classification Scheme for Myoelectric Control of Powered Upper Limb Prostheses," vol. 52, no. February 2016, pp. 1801–1811, 2005.

[51] L. H. Smith, L. J. Hargrove, B. A. Lock, and T. A. Kuiken, "Determining the optimal window length for pattern recognition-based myoelectric control: Balancing the competing effects of classification error and controller delay," *IEEE Trans. Neural Syst. Rehabil. Eng.*, vol. 19, no. 2, pp. 186–192, 2011.

[52] J. Liu, "Adaptive myoelectric pattern recognition toward improved multifunctional prosthesis control," *Med. Eng. Phys.*, vol. 37, no. 4, pp. 424–430, 2015.

[53] E. Scheme *et al.*, "Motion Normalized Proportional Control for Improved Pattern Recognition-Based Myoelectric Control," vol. 22, no. 1, pp. 149–157, 2014.

[54] B. Hudgins, P. Parker, and R. N. Scott, "A New Strategy for Multifunction Myoelectric Control," *IEEE Trans. Biomed. Eng.*, vol. 40, no. 1, pp. 82–94, 1993.

[55] H. F. Hassan, S. J. Abou-Loukh, and I. K. Ibraheem, "Teleoperated robotic arm movement using electromyography signal with wearable Myo armband," *J. King Saud Univ. - Eng. Sci.*, May 2019.

[56] Sang-Hui Park and Seok-Pil Lee, "EMG pattern recognition based on artificial intelligence techniques," *IEEE Trans. Rehabil. Eng.*, vol. 6, no. 4, pp. 400–405, 1998.

[57] A. H. Al-Timemy, G. Bugmann, J. Escudero, and N. Outram, "Classification of Finger Movements for the Dexterous Hand Prosthesis Control With Surface Electromyography," *IEEE J. Biomed. Heal. Informatics*, vol. 17, no. 3, pp. 608–618, May 2013.

[58] Y.-H. Liu and H.-P. Huang, "Towards a high-stability EMG recognition system for prosthesis control: A one-class classification based non-target EMG pattern filtering scheme," in *2009 IEEE International Conference on Systems, Man and Cybernetics*, 2009, pp. 4752–4757.

[59] K. Englehart, B. Hudgins, and P. A. Parker, "A wavelet-based continuous classification scheme for multifunction myoelectric control," *IEEE Trans. Biomed. Eng.*, vol. 48, no. 3, pp. 302–311, 2001.

[60] N. Jiang, H. Rehbaum, I. Vujaklija, B. Graimann, and D. Farina, "Intuitive, Online, Simultaneous, and Proportional Myoelectric Control Over Two Degrees-of-Freedom in Upper Limb Amputees," *IEEE Trans. Neural Syst. Rehabil. Eng.*, vol. 22, no. 3, pp. 501–510, May 2014.

[61] R. N. Khushaba, M. Takruri, J. V. Miro, and S. Kodagoda, "Towards limb position invariant myoelectric pattern recognition using time-dependent spectral features," *Neural Networks*, vol. 55, pp. 42–58, Jul. 2014.

[62] A. H. Al-Timemy, R. N. Khushaba, G. Bugmann, and J. Escudero, "Improving the Performance Against Force Variation of EMG Controlled Multifunctional Upper-Limb Prostheses for Transradial Amputees," *IEEE Trans. Neural Syst. Rehabil. Eng.*, vol. 24, no. 6, pp. 650–661, 2016.

[63] R. N. Khushaba, A. H. Al-Timemy, A. Al-Ani, and A. Al-Jumaily, "A Framework of Temporal-Spatial Descriptors-Based Feature Extraction for Improved Myoelectric Pattern Recognition," *IEEE Trans. Neural Syst. Rehabil. Eng.*, vol. 25, no. 10, pp. 1821–1831, Oct. 2017.

[64] S. Pancholi and A. M. Joshi, "Time Derivative Moments Based Feature Extraction Approach for Recognition of Upper Limb Motions Using EMG," *IEEE Sensors Lett.*, vol. 3, no. 4, pp. 1–4, Apr. 2019.

[65] L. Hargrove, S. Member, G. Li, K. Englehart, and L. Hargrove, "Principal Components Analysis Preprocessing to improve Classification Accuracies in Pattern Recognition Based Myoelectric Control Corresponding author," vol. 56, no. 506, pp. 1–28, 2009.

[66] M. Simão, N. Mendes, and O. Gibaru, "A Review on Electromyography Decoding and Pattern Recognition for Human-Machine Interaction," *IEEE Access*, vol. 7, pp. 39564–39582, 2019.

[67] F. Bitar, N. Madi, E. Ramly, M. Saghir, and F. Karameh, "A portable MIDI controller using EMG-based individual finger motion classification," *Conf. Proc. - IEEE Biomed. Circuits Syst. Conf. Healthc. Technol. BiOCAS2007*, pp. 138–141, 2007.

[68] S. A. Ahmad, A. J. Ishak, S. H. Ali, and P. H. Chappell, "Review of Electromyography Control Systems Based on Pattern Recognition for Prosthesis Control Application," *Aust. J. Basic Appl. Sci.*, vol. 5, no. 8, pp. 1512–1518, 2011.

[69] D. C. Dening, F. G. Gray, and R. M. Haralick, "Prosthesis Control Using a Nearest Neighbor Electromyographic Pattern Classifier," *IEEE Trans. Biomed. Eng.*, vol. BME-30, no. 6, pp. 356–360, 1983.

[70] M. Zardoshti-Kermani, B. C. Wheeler, K. Badie, and R. M. Hashemi, "EMG feature evaluation for movement control of upper extremity protheses," *IEEE Trans. Rehabil. Eng.*, vol. 3, no. 4, pp. 324–333, 1995.

[71] S. L. Carey, D. J. Lura, and M. J. Highsmith, "Differences in myoelectric and body-powered upper-limb prostheses: Systematic literature review Stephanie," vol. 52, no. 3, pp. 247–262, 2015.

[72] A. M. Simon, L. J. Hargrove, and I. Member, "A Decision-Based Velocity Ramp for Minimizing the Effect of Misclassifications During Real-Time Pattern Recognition Control," vol. 58, no. 8, pp. 3350–3353, 2011.

[73] E. J. Scheme, K. B. Englehart, and B. S. Hudgins, "Selective classification for improved robustness of myoelectric control under nonideal conditions," *IEEE Trans. Biomed. Eng.*, vol. 58, no. 6, pp. 1698–1705, 2011.

[74] S. Ams *et al.*, "Self-Correcting Pattern Recognition System of Surface EMG Signals for Upper Limb Prosthesis Control," vol. 61, no. 4, pp. 1167–1176, 2014.

[75] X. Zhang, X. Li, O. W. Samuel, Z. Huang, P. Fang, and G. Li, "Improving the robustness of

electromyogram-pattern recognition for prosthetic control by a postprocessing strategy," *Front. Neurorobot.*, vol. 11, no. SEP, pp. 1–15, 2017.

[76] A. D. Roche, H. Rehbaum, D. Farina, and O. C. Aszmann, "Prosthetic Myoelectric Control Strategies: A Clinical Perspective," *Curr. Surg. Reports*, vol. 2, no. 3, 2014.

[77] J. L. G. Nielsen, S. Holmgaard, N. Jiang, K. Englehart, D. Farina, and P. Parker, "Enhanced EMG signal processing for simultaneous and proportional myoelectric control," *Proc. 31st Annu. Int. Conf. IEEE Eng. Med. Biol. Soc. Eng. Futur. Biomed. EMBC 2009*, pp. 4335–4338, 2009.

[78] K. Xu, W. Guo, L. Hua, X. Sheng, and X. Zhu, "A prosthetic arm based on EMG pattern recognition," *2016 IEEE Int. Conf. Robot. Biomimetics, ROBIO 2016*, pp. 1179–1184, 2016.

[79] L. Resnik, K. Etter, S. L. Klinger, and C. Kambe, "Using virtual reality environment to facilitate training with advanced upper-limb prosthesis," *J. Rehabil. Res. Dev.*, vol. 48, no. 6, pp. 707–718, 2011.

[80] Y. Geng, O. W. Samuel, Y. Wei, and G. Li, "Improving the Robustness of Real-Time Myoelectric Pattern Recognition against Arm Position Changes in Transradial Amputees," *Biomed Res. Int.*, vol. 2017, 2017.

[81] N. Parajuli *et al.*, "Real-Time EMG Based Pattern Recognition Control for Hand Prostheses: A Review on Existing Methods, Challenges and Future Implementation," *Sensors (Basel, Switzerland)*, vol. 19, no. 20. NLM (Medline), 02-Oct-2019.

[82] B. Karlik, M. U. Prosthesis, B. Karlik, M. O. Tokhi, S. Member, and M. Alci, "A Fuzzy Clustering Neural Network Architecture for Multifunction Upper-Limb Prosthesis," vol. 50, no. December, pp. 1255–1261, 2003.

[83] A. D. C. Chan and K. B. Englehart, "Continuous Myoelectric Control for Powered Prostheses Using Hidden Markov Models Adrian," vol. 52, no. 1, pp. 121–124, 2005.

[84] L. Pan, D. Zhang, J. Liu, X. Sheng, and X. Zhu, "Continuous estimation of finger joint angles under different static wrist motions from surface EMG signals," *Biomed. Signal Process. Control*, vol. 14, pp. 265–271, 2014.

[85] F. Riillo *et al.*, "Optimization of EMG-based hand gesture recognition: Supervised vs. unsupervised data preprocessing on healthy subjects and transradial amputees," *Biomed. Signal Process. Control*, vol. 14, pp. 117–125, Nov. 2014.

[86] P. Shenoy, K. J. Miller, B. Crawford, and R. P. N. Rao, "Online electromyographic control of a robotic prosthesis," *IEEE Trans. Biomed. Eng.*, vol. 55, no. 3, pp. 1128–1135, 2008.

[87] A. Stango, S. Member, F. Negro, D. Farina, and S. Member, "Spatial Correlation of High Density EMG Signals Provides Features Robust to Electrode Number and Shift in Pattern Recognition for Myocontrol," vol. 23, no. 2, pp. 189–198, 2015.

[88] S. Soman, Jayadeva, S. Arjunan, and D. K. Kumar, "Improved sEMG signal classification using the Twin SVM," in *2016 IEEE International Conference on Systems, Man, and Cybernetics (SMC)*, 2016, pp. 004507–004512.

[89] J. Liu and P. Zhou, "A novel myoelectric pattern recognition strategy for hand function restoration after incomplete cervical spinal cord injury," *IEEE Trans. Neural Syst. Rehabil. Eng.*, vol. 21, no. 1, pp. 96–103, 2013.

[90] H. Kawasaki, M. Kayukawa, H. Sakaeda, and T. Mouri, "Learning system for myoelectric prosthetic hand control by forearm amputees," in *The 23rd IEEE International Symposium on Robot and Human Interactive Communication*, 2014, pp. 899–904.

[91] K. Momen, S. Krishnan, and T. Chau, "Real-time classification of forearm electromyographic signals corresponding to user-selected intentional movements for multifunction prosthesis control," *IEEE Trans. Neural Syst. Rehabil. Eng.*, vol. 15, no. 4, pp. 535–542, 2007.

[92] S. Pancholi and A. M. Joshi, "Electromyography-Based Hand Gesture Recognition System for Upper Limb Amputees," *IEEE Sensors Lett.*, vol. 3, no. 3, pp. 1–4, 2019.

[93] R. W. Wirta, D. R. Taylor, and F. R. Finley, "Pattern-recognition arm prosthesis: a historical

perspective-a final report.," *Bull. Prosthet. Res.*, pp. 8–35, 1978.

[94] G. C. Chang *et al.*, "Real-time implementation of electromyogram pattern recognition as a control command of man-machine interface," *Med. Eng. Phys.*, vol. 18, no. 7, pp. 529–537, 1996.

[95] C. J. Yen, W. Y. Chung, K. P. Lin, C. L. Tsai, S. H. Lee, and T. S. Chen, "Analog integrated circuit design for the wireless bio-signal transmission system," *AP-ASIC 1999 - 1st IEEE Asia Pacific Conf. ASICs*, pp. 345–346, 1999.

[96] I. Kajitani *et al.*, "An evolvable hardware chip for prosthetic hand controller," in *Proceedings of the 7th International Conference on Microelectronics for Neural, Fuzzy and Bio-Inspired Systems, MicroNeuro 1999*, 1999, pp. 179–186.

[97] C. C. Kim and Jung, "A Real-time EMG-based Assistive Computer Interface for the Upper Limb Disabled. In , Noordwijk, The Netherlands.," *Proc. 2007 IEEE 10th Int. Conf. Rehabil. Robot.*, vol. 00, no. c, pp. 459–462, 2007.

[98] A. Xiong, Y. Chen, X. Zhao, J. Han, and G. Liu, "A novel HCI based on EMG and IMU," *2011 IEEE Int. Conf. Robot. Biomimetics, ROBIO 2011*, pp. 2653–2657, 2011.

[99] X. Zhang, H. Huang, and Q. Yang, "Real-time implementation of a self-recovery EMG pattern recognition interface for artificial arms," *Proc. Annu. Int. Conf. IEEE Eng. Med. Biol. Soc. EMBS*, pp. 5926–5929, 2013.

[100] A. L. Edwards *et al.*, "Application of real-time machine learning to myoelectric prosthesis control: A case series in adaptive switching."

[101] L. J. Resnik, F. Acluche, and S. L. Klinger, *User experience of controlling the DEKA Arm with EMG pattern recognition*, vol. 13, no. 9. 2018.

[102] E. Mastinu, S. Member, and J. Ahlberg, "An Alternative Myoelectric Pattern Recognition Approach for the Control of Hand Prostheses : A Case Study of Use in Daily Life by a Dysmelia Subject," *IEEE J. Transl. Eng. Health Med*, vol. 6, pp. 1-12, October 2018.

[103] L. J. Hargrove, L. A. Miller, K. Turner, and T. A. Kuiken, "Myoelectric Pattern Recognition Outperforms Direct Control for Transhumeral Amputees with Targeted Muscle Reinnervation : A Randomized Clinical Trial," *Sci. Rep.*, vol. 7, pp. 1–9, August 2017.

[104] S. Raurale, J. McAllister, J.M. del Rincon, "EMG wrsit-hand motion recognition system for real- time embedded platform" The Institute of Electronics , Communications and Information Technology (ECIT), Queen's University of Belfast: Belfast, Northern Ireland, pp. 1523–1527, 2019.

[105] R. B. Woodward and L. J. Hargrove, "Adapting myoelectric control in real-time using a virtual environment," *J. Neuroeng. Rehabil.*, vol. 16, no. 1, pp. 1–12, 2019.

[106] T. A. Kuiken, B. A. Lock, R. D. Lipschutz, L. A. Miller, K. A. Stubblefield, and K. B. Englehart, "Targeted Muscle Reinnervation for Real-time Myoelectric Control of Multifunction Artificial Arms," *JAMA - J. Am. Med. Assoc.*, vol. 301, no. 6, pp. 619–628, 2009.

[107] J. A. Barraza-Madrigal, A. Ramirez-Garcia, and R. Munoz-Guerrero, "A virtual upper limb prosthesis as a training system," in *2010 7th International Conference on Electrical Engineering Computing Science and Automatic Control*, 2010, pp. 210–215.

[108] K. Englehart and B. Hudgins, "A Robust, Real-Time Control Scheme for Multifunction Myoelectric Control," *IEEE Trans. Biomed. Eng.*, vol. 50, no. 7, pp. 848–854, 2003.

[109] A. M. Simon, L. J. Hargrove, B. A. Lock, and T. A. Kuiken, "Target achievement control test: Evaluating real-time myoelectric pattern-recognition control of multifunctional upper-limb prostheses," *J. Rehabil. Res. Dev.*, vol. 48, no. 6, pp. 619–628, 2011.

[110] R. M. Edith and A. Bhargavi Haripriya, "Gesture recognition using real time EMG," in *2015 International Conference on Innovations in Information, Embedded and Communication Systems (ICIIECS)*, 2015, pp. 1–3.

[111] A. Krasoulis, I. Kyranou, M. S. Erden, K. Nazarpour, and S. Vijayakumar, "Improved prosthetic hand control with concurrent use of myoelectric and inertial measurements," *J. Neuroeng. Rehabil.*, vol. 14,

no. 1, p. 71, Dec. 2017.

[112] T. Jiralerspong, E. Nakanishi, C. Liu, and J. Ishikawa, "Experimental study of real-time classification of 17 voluntary movements for multi-degree myoelectric prosthetic hand," *Appl. Sci.*, vol. 7, no. 11, 2017.

[113] D. C. Tkach, A. J. Young, L. H. Smith, E. J. Rouse, and L. J. Hargrove, "Real-time and offline performance of pattern recognition myoelectric control using a generic electrode grid with targeted muscle reinnervation patients," *IEEE Trans. Neural Syst. Rehabil. Eng.*, vol. 22, no. 4, pp. 727–734, 2014.

[114] H. Converse, T. Ferraro, D. Jean, L. Jones, V. Mendhiratta, E. Naviasky, M. Par, T. Rimlinger, S. Southall, J. Sprenkle, *et al.*, "An EMG biofeedback device for video game use in forearm physiotherapy," In Proceedings of the IEEE Sensors 2013, Baltimore, MD, USA, 3–6 November 2013.

[115] G. Kanitz, C. Cipriani, and B. B. Edin, "Classification of transient myoelectric signals for the control of multi-grasp hand prostheses," *IEEE Trans. Neural Syst. Rehabil. Eng.*, vol. 26, no. 9, pp. 1756–1764, 2018.

[116] J. Liu, Y. Ren, D. Xu, S. H. Kang, and L.-Q. Zhang, "EMG-Based Real-Time Linear-Nonlinear Cascade Regression Decoding of Shoulder, Elbow and Wrist Movements in Able-Bodied Persons and Stroke Survivors," *IEEE Trans. Biomed. Eng.*, pp. 1–1, Aug. 2019.

[117] J. Rueterbories, E. G. Spaich, B. Larsen, and O. K. Andersen, "Methods for gait event detection and analysis in ambulatory systems," *Med. Eng. Phys.*, vol. 32, no. 6, pp. 545–552, Jul. 2010.

[118] S. Shahmoradi and S. B. Shouraki, "A Fuzzy sequential locomotion mode recognition system for lower limb prosthesis control," *2017 25th Iran. Conf. Electr. Eng. ICEE 2017*, no. Icee20 17, pp. 2153–2158, 2017.

[119] A. M. Howell, T. Kobayashi, H. A. Hayes, K. B. Foreman, and S. J. M. Bamberg, "Kinetic Gait Analysis Using a Low-Cost Insole," *IEEE Trans. Biomed. Eng.*, vol. 60, no. 12, pp. 3284–3290, Dec. 2013.

[120] A. K. Godiyal, U. Singh, S. Anand, and D. Joshi, "Analysis of force myography based locomotion patterns," *Meas. J. Int. Meas. Confed.*, vol. 140, pp. 497–503, 2019.

[121] J. Park, S. J. Kim, Y. Na, and J. Kim, "Custom optoelectronic force sensor based ground reaction force (GRF) measurement system for providing absolute force," *2016 13th Int. Conf. Ubiquitous Robot. Ambient Intell. URAI 2016*, vol. 1, pp. 75–77, 2016.

[122] A. M. El-Sayed, N. A. Hamzaid, K. Y. S. Tan, and N. A. Abu Osman, "Detection of prosthetic knee movement phases via in-socket sensors: A feasibility study," *Sci. World J.*, vol. 2015, 2015.

[123] D. Van Chien, K. J. Sung, and J. W. Kim, "Sensory reflex control of a humanoid robot using FSR sensor," *IEEE/ASME Int. Conf. Adv. Intell. Mechatronics, AIM*, vol. 2015-Augus, pp. 1406–1409, 2015.

[124] H. Saadati, "Human's upper body kinematics: State of art," *IFMBE Proc.*, vol. 31 IFMBE, pp. 278–281, 2010.

[125] O. Amft, G. Troster, P. Lukowicz, and C. Schuster, "Sensing Muscle Activities with Body-Worn Sensors," in *International Workshop on Wearable and Implantable Body Sensor Networks (BSN'06)*, pp. 138–141.

[126] V. Affairs, "Upper Limb Myoelectric Prosthesis With Cosmetic Covering," *J. Rehabil. Res. Dev.*, 1998.

[127] X. Wang, J. Zhao, D. Yang, N. Li, C. Sun, and H. Liu, "Biomechatronic approach to a multi-fingered hand prosthesis," *2010 3rd IEEE RAS EMBS Int. Conf. Biomed. Robot. Biomechatronics, BioRob 2010*, pp. 209–214, 2010.

[128] L. Osborn, N. V Nitish Thakor, and R. Kaliki, "Utilizing Tactile Feedback for Biomimetic Grasping Control in Upper Limb Prostheses," " *SENSORS, 2013 IEEE*, Baltimore, MD, 2013, pp. 1-4.

[129] A. M. M. Ali, M. Y. Zulkhairi, A. K. Kushairy, A. S. Faez, F. Hanani, and M. S. Syuhada, "Development of artificial arms for therapy process by using microcontroller system," *2015 IEEE Int. Conf. Smart Instrumentation, Meas. Appl. ICSIMA 2015*, no. Mvc, pp. 1–4, 2016.

[130] G. Sadarangani and C. Menon, "A wearable sensor system for rehabilitation apllications," *IEEE Int. Conf. Rehabil. Robot.*, vol. 2015-Septe, pp. 672–677, 2015.

[131] R.-S. Hsiao, T.-X. Chen, M. A. Bitew, C.-H. Kao, and T.-Y. Li, "Sleeping posture recognition using fuzzy c-means algorithm.," *Biomed. Eng. Online*, vol. 17, no. Suppl 2, p. 157, Nov. 2018.

[132] T. Stefanou, A. Turton, A. Lenz, and S. Dogramadzi, "Upper limb motion intent recognition using tactile sensing," *IEEE Int. Conf. Intell. Robot. Syst.*, vol. 2017-Septe, pp. 6601–6608, 2017.

[133] A. Malik Mohd Ali *et al.*, "Preliminary Design of a Robotic Exoskeleton for Arm Rehabilitation," *J. Phys. Conf. Ser.*, vol. 1049, no. 1, 2018.

[134] S. N. Sidek *et al.*, "Combined Use of FSR Sensor Array and SVM Classifier for Finger Motion Recognition Based on Pressure Distribution Map," *2010 3rd IEEE RAS EMBS Int. Conf. Biomed. Robot. Biomechatronics, BioRob 2010*, vol. 9, no. 2, pp. 1–4, 2012.

[135] N. Li, D. Yang, L. Jiang, H. Liu, and H. Cai, "Combined Use of FSR Sensor Array and SVM Classifier for Finger Motion Recognition Based on Pressure Distribution Map," *J. Bionic Eng.*, vol. 9, no. 1, pp. 39–47, 2012.

[136] N. A. A. Razak, N. A. A. Osman, H. Gholizadeh, and S. Ali, "Prosthetics socket that incorporates an air splint system focusing on dynamic interface pressure," *Biomed. Eng. Online*, vol. 13, no. 1, pp. 1–13, 2014.

[137] Z. G. Xiao and C. Menon, "Towards the development of a wearable feedback system for monitoring the activities of the upper-extremities," *J. Neuroeng. Rehabil.*, vol. 11, no. 1, 2014.

[138] A. Wong Azman *et al.*, "Analysis on the effect of stimulator parameters in electrical stimulation procedure on the human bicep muscle," *J. Teknol.*, vol. 78, no. 7–5, pp. 15–22, 2016.

[139] R. S. Chegani and C. Menon, "Pilot study on fine finger movement regression, using fmg," *2017 IEEE Int. Conf. Syst. Man, Cybern. SMC 2017*, vol. 2017-Janua, pp. 1069–1074, 2017.

[140] E. Cho, R. Chen, L. K. Merhi, Z. Xiao, B. Pousett, and C. Menon, "Force myography to control robotic upper extremity prostheses: A feasibility study," *Front. Bioeng. Biotechnol.*, vol. 4, no. MAR, pp. 1–12, 2016.

[141] M. Nabeel, K. Aqeel, M. N. Ashraf, M. I. Awan, and M. Khurram, "Vibrotactile stimulation for 3D printed prosthetic hand," *2016 2nd Int. Conf. Robot. Artif. Intell. ICRAI 2016*, pp. 202–207, 2016.

[142] M. González-Fernández, "Development of Upper Limb Prostheses: Current Progress and Areas for Growth," *Arch. Phys. Med. Rehabil.*, vol. 95, no. 6, pp. 1013–1014, Jun. 2014.

[143] P. F. Pasquina, B. N. Perry, M. E. Miller, G. S. F. Ling, and J. W. Tsao, "Recent advances in bioelectric prostheses.," *Neurol. Clin. Pract.*, vol. 5, no. 2, pp. 164–170, Apr. 2015.

[144] L. Hargrove, K. Englehart, and B. Hudgins, "The effect of electrode displacements on pattern recognition based myoelectric control," in *2006 International Conference of the IEEE Engineering in Medicine and Biology Society*, 2006, vol. 1, pp. 2203–2206.

[145] O. W. Samuel *et al.*, "Resolving the adverse impact of mobility on myoelectric pattern recognition in upper-limb multifunctional prostheses," *Comput. Biol. Med.*, vol. 90, pp. 76–87, Nov. 2017.

[146] J. Ribeiro *et al.*, "Analysis of man-machine interfaces in upper-limb prosthesis: A review," *Robotics*, vol. 8, no. 1, pp. 1–17, 2019.

[147] D. S. V. Bandara, J. Arata, and K. Kiguchi, "Towards Control of a Transhumeral Prosthesis with EEG Signals," *Bioengineering*, vol. 5, no. 2, 2018.

[148] C. Guger, A. Schlogl, C. Neuper, D. Walterspacher, T. Strein, and G. Pfurtscheller, "Rapid prototyping of an EEG-based brain-computer interface (BCI)," *IEEE Trans. Neural Syst. Rehabil. Eng.*, vol. 9, no. 1, pp. 49–58, Mar. 2001.

[149] M. S. Fifer, S. Acharya, H. L. Benz, M. Mollazadeh, N. E. Crone, and N. V Thakor, "Toward electrocorticographic control of a dexterous upper limb prosthesis: building brain-machine interfaces.," *IEEE Pulse*, vol. 3, no. 1, pp. 38–42, Jan. 2012.

[150] K. Liao, R. Xiao, J. Gonzalez, and L. Ding, "Decoding individual finger movements from one hand using human EEG signals," *PLoS One*, vol. 9, no. 1, pp. 1–12, 2014.

[151] G. Gargiulo *et al.*, "Investigating the role of combined acoustic-visual feedback in one-dimensional synchronous brain computer interfaces, a preliminary study," *Med. Devices Evid. Res.*, vol. 5, p. 81, Sep. 2012.

[152] C. Guger, G. Edlinger, W. Harkam, I. Niedermayer, and G. Pfurtscheller, "How many people are able to operate an eeg-based brain-computer interface (bci)?," *IEEE Trans. Neural Syst. Rehabil. Eng.*, vol. 11, no. 2, pp. 145–147, Jun. 2003.

[153] D. Sierra González and C. Castellini, "A realistic implementation of ultrasound imaging as a human-machine interface for upper-limb amputees.," *Front. Neurorobot.*, vol. 7, p. 17, 2013.

[154] P. R. Troyk, G. A. DeMichele, D. A. Kerns, and R. F. Weir, "IMES: An implantable myoelectric sensor," *Annu. Int. Conf. IEEE Eng. Med. Biol. - Proc.*, pp. 1730–1733, 2007.

[155] A. McEwan, P. Bifulco, A. Wabnitz, M. Cesarelli, and G. D. Gargiulo, "Open platform, 32-channel, portable, data-logger with 32 PGA control lines for wearable medical device development," *Electron. Lett.*, vol. 50, no. 16, pp. 1127–1129, 2014.

[156] L. Paredes-Madrid, A. Matute, J. O. Bareño, C. A. P. Vargas, and E. I. G. Velásquez, "Underlying physics of conductive polymer composites and Force Sensing Resistors (FSRs). A study on creep response and dynamic loading," *Materials (Basel).*, vol. 10, no. 11, 2017.

[157] A.S. Sadun, J.Jalani, and J.A. Sukar "Force Sensing Resistor (FSR): a brief overview and the low-cost sensor for active compliance control", Proc. SPIE 10011, First International Workshop on Pattern Recognition, Tokyo, Japan, 11 July 2016.

[158] "Myoware-muscle-sensor-kit." [Online]. Available: https://learn.sparkfun.com/tutorials/myoware-muscle-sensor-kit?_ga=2.26704510.233480682.1554862568-345643408.1553142099.

[159] "Data Acquisition (DAQ) - National Instruments." [Online]. Available: http://www.ni.com/data-acquisition/. [Accessed: 18-Aug-2019].

[160] "Arduino Uno Rev3." [Online]. Available: https://store.arduino.cc/usa/arduino-uno-rev3. [Accessed: 18-Aug-2019].

[161] "OPA277 datasheet | TI.com." [Online]. Available: http://www.ti.com/document-viewer/OPA277/datasheet/abstract#SBOS0794893. [Accessed: 18-Aug-2019].

.