RE
Metadata, citation and similar papers at core
by Brunel University Research Archive

Future Transmitter/Receiver Diversity Schemes in Broadcast Wireless Networks

Yue Zhang, John Cosmas, and YongHua Song, Brunel University
Maurice Bard, Broadreach Systems

Abstract

An open diversity architecture for a cooperating broadcast wireless network is presented that exploits the strengths of the existing digital broadcast standards. Different diversity techniques for broadcast networks that will minimize the complexity of broadcast systems and improve received SNR of broadcast signals are described. Resulting digital broadcast networks could require fewer transmitter sites and thus be more cost effective with less environmental impact. Transmit diversity is particularly investigated since it obviates the major disadvantage of receive diversity being the difficulty of locating two receive antennas far enough apart in a small mobile device. The schemes examined here are compatible with existing broadcast and cellular telecom standards, and can be incorporated into existing systems without change.

Introduction

The vision for future mobile communications networks is of an open architecture supporting a multiplicity of international standard wireless network technologies ranging from second-/third-/fourth-generation (2G/3G/4G) cellular radio systems (GSM, GPRS, UMTS) to wireless local area networks (WLANs), broadband radio access networks (BRANs) to digital video and audio broadcast networks (DVB, DAB) [1].

Future mobile radio systems are expected to deliver services, which inherently require high data rates. Orthogonal frequency-division multiplexing (OFDM) [2] is an ideal technique for broadband transmission in multipath fading environments and is implemented in broadcast standards like DAB or DVB as well as WLAN standards [3] such as HIPERLAN/2 or IEEE 802.11a/g and WiMAX. Spatial diversity can be used to improve the error performance and channel capacity in these systems by overcoming degradations caused by scattering environments. The use of multiple transmit and receive antennas (multiple-input multiple-out, MIMO) is a well documented technique where each pair of transmit and receive antennas provides a different signal path from the transmitter to the receiver. By sending signals that carry the same information through these different paths, multiple independently faded replicas of the data symbol can be obtained at the receive end. Maximum diversity gain is achieved when fading is uncorrelated across antenna pairs.

More recent work has focused on investigating how techniques such as trellis-based space-time codes [4, 5] and orthogonal designs [6] can be applied to multiple transmit antennas to maximize the diversity gain. Unfortunately, space-time coding is not compliant with current standards for broadcast systems; therefore, only spatial diversity techniques can be applied. If multiple signals are received with short delay spread, the OFDM signal is faded equally across the channel in a flat fade; this induces long error bursts that are hard to correct since there is insufficient frequency selectivity to be exploited by the coding and interleaving schemes. Cyclic delay diversity (CDD) [7] is a very simple and elegant method that, when combined with MIMO, improves frequency selectivity, thereby randomizing the channel response. The computational cost of CDD is very low, as all signal processing needed is performed on the OFDM signals in the time domain.

This article focuses on an open wireless diversity structure. First, we introduce the system model and then discuss different diversity techniques, including CDD for transmitter and maximum ratio combining (MRC) for receiver. The application of CDD to DVB-H systems is discussed, and results of simulations are presented. Finally, we present the conclusions of this study.

System Model

OFDM

OFDM is a proven technique for achieving high data rates and overcoming multipath fading in wireless communication. OFDM can be thought of as a hybrid of multicarrier modulation (MCM) and frequency shift keying (FSK) modulation.

0163-6804/06/$20.00 © 2006 IEEE

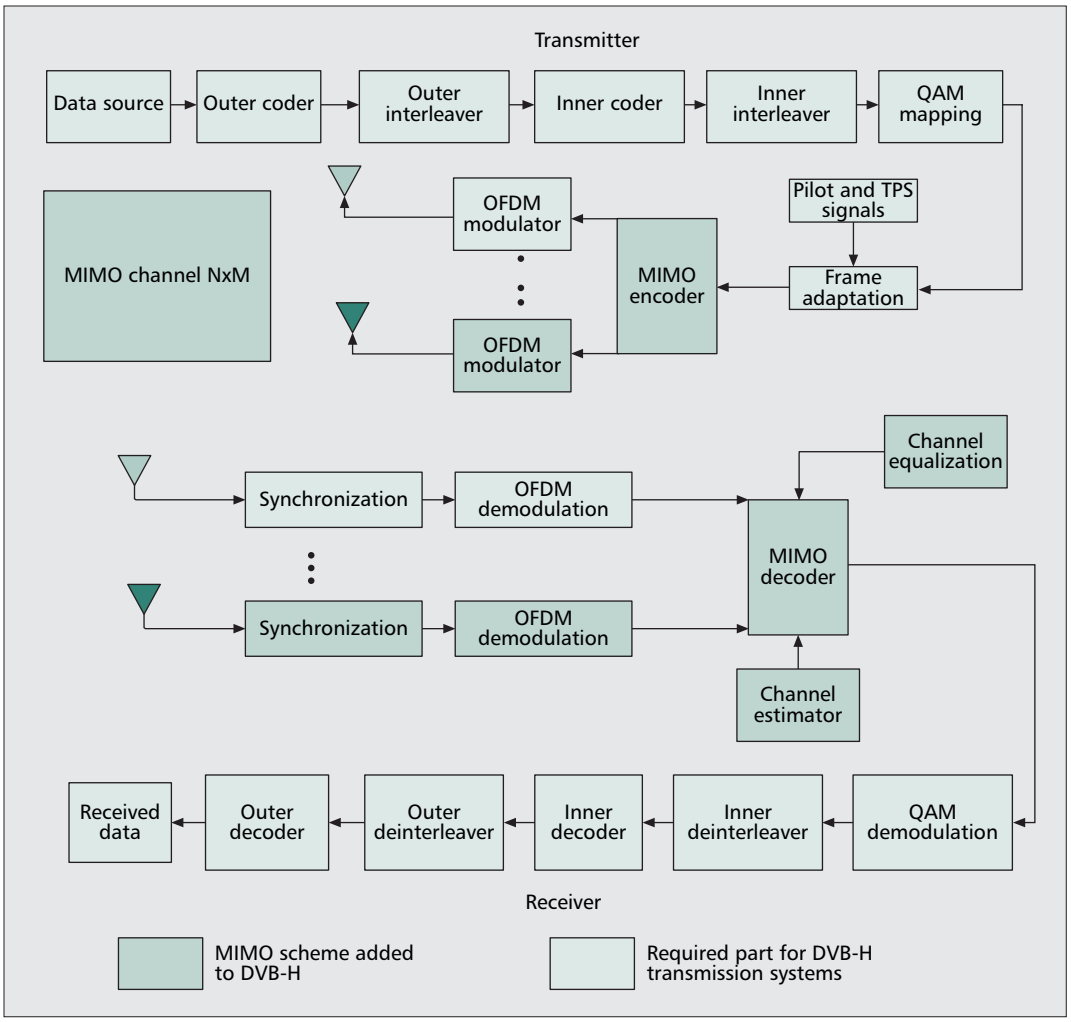

Figure 1. *End-to-end MIMO system diagram of DVB-T/H transmission with coded data.*

The block interleaver can be described as a matrix to which data is written in columns and read in rows. The modulator process is equivalent to an inverse discrete Fourier transform, while the demodulation process is equivalent to a discrete Fourier transform.

Orthogonality among carriers is achieved by separating them by an integer multiple of the inverse of symbol duration of the parallel bitstreams, thus minimizing intersymbol interference (ISI). Carriers are spread across the complete channel, fully occupying it and hence using the bandwidth very efficiently. The OFDM receiver uses adaptive bit loading techniques based on a dynamic estimate of the channel response, to adapt its processing and compensate for channel propagation characteristics and achieve near ideal capacity. This most important advantage of OFDM systems over single-carrier systems is obtained when there is frequency-selective fading. The signal processing in the receiver is rather simple; distortion of the signals is compensated by multiplying each subcarrier by a complex transfer factor, thereby equalizing the channel response. It is not feasible for conventional single-carrier transmission systems to use this method.

However, some disadvantages of OFDM systems are that the peak-to-average power ratio (PAPR) of OFDM is higher than for a single-carrier system, and OFDM is sensitive to a flat fading channel.

OFDM is employed in the DVB-T and DVB-H systems; a block diagram of a coded OFDM system for DVB-H is shown in Fig. 1. The outer coder is Reed-Solomon shortened code RS(204,188) derived from the original systematic RS(255,239) code. The inner coder comprises a puncture coder and a convolutional coder. The puncture coder is based on the mother convolutional code of rate 1/2 with 64 states. The convolutional coder increases error correction capability and codes used are similar to those widely employed in digital communication systems such as GSM, IS95, and WLAN systems: convolutional code generators of $x^6 + x^4 + x^3 + x + 1$ and $x^6 + x^5 + x^4 + x^3 + 1$. A puncture coder is a common solution employed to reduce the loss of data throughput capacity caused by a convolutional coder. This is done by not transmitting some of the bits output by the convolutional coder, but results in the receiver having to implement different convolution puncture decoders for each of the puncture patterns used. An inner interleaver is used to distribute transmitter bits in time or frequency or both to achieve an optimum distribution of bit errors after modulation. The block interleaver can be described as a matrix to which data is written in columns and read in rows. The modulator process is equivalent to an inverse discrete Fourier transform (IDFT), while the demodulation process is equivalent to a discrete Fourier transform (DFT).

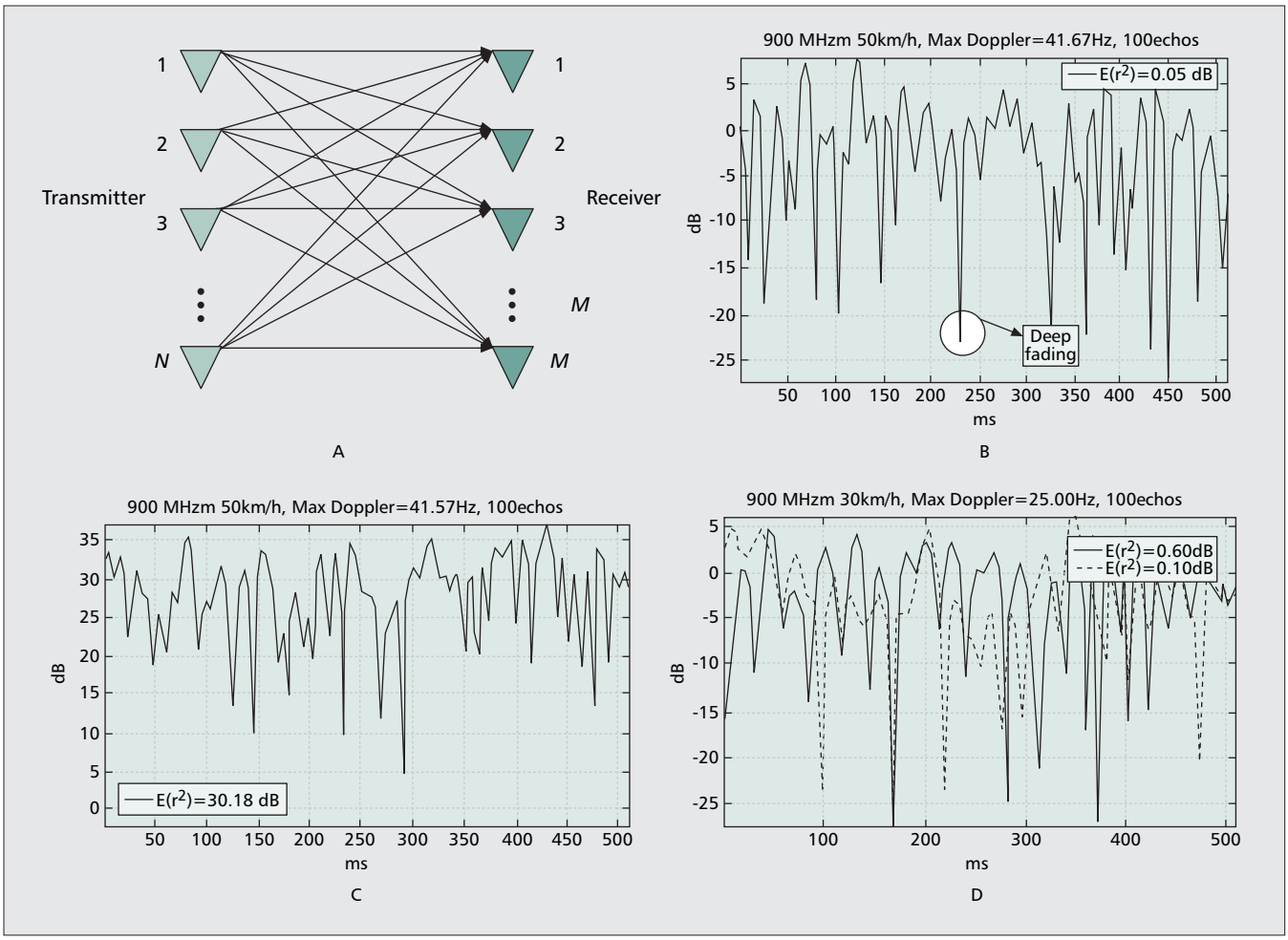

Figure 2. *a)* M × N *i.i.d MIMO channel; b) Rayleigh fading channel (*E *= 0.05 dB); c) Rician fading channel with Rician* K*-factor = 0.17 (*E *= 30.18 dB); and d) time histories of two uncorrelated MIMO channels (Rayleigh fading).*

MIMO

A MIMO system utilizes multiple antennas at the transmitter and receiver. Such systems have demonstrated the ability to reliably provide high throughput in rich multipath environments.

Spatial diversity employs the spatial properties of multipath channels, providing a new dimension that can be exploited to enhance performance. Coding and diversity are key elements of a successful MIMO implementation, while the propagation channel and antenna installations have a major impact on system performance.

Figure 1 also shows the additional components required for a typical coded MIMO system. There are three kinds of MIMO techniques. The first aims to improve power efficiency by maximizing spatial diversity; such techniques include delay diversity, space-time block codes (STBC), and space-time trellis codes (STTC). The second uses a layered approach to increase capacity (e.g., V-BLAST architecture), while the third exploits knowledge of the channel at the transmitter. MIMO systems have proven to be very effective at combating time varying multipath fading in broadband wireless channels. In these systems, replicas of the transmitted signal, with uncorrelated variations in the time, frequency, or spatial domain, or a combination of all three arrive at the receiver. The replicas are combined in such a way as to minimize the transmission degradation that could be caused by performance of each of the individual channels. Effectiveness or "diversity gain" of an implementation is dependent on the scenario for the propagation channels (e.g., rural or urban), transmission data rate, Doppler spread, and channel delay spread.

In our modeling analysis we consider an equivalent baseband MIMO channel with N transmit antennas and M receiver antennas illustrated in Fig. 2a. There are $M \times N$ channels with independently distributed wide-sense stationary uncorrelated scattered (WSSUS) Rayleigh-fading. If there is no direct line of sight between the transmitter and the receiver, the impulse response of the channel is modeled by several paths, each with a Gaussian distribution of zero mean complex variable (envelope and phase), the envelope of which has a Rayleigh distribution shown in Fig. 2b. If we are modeling a transmission with direct line of sight between the transmitter and the receiver, then process does not have a zero mean, the envelope has a Rice distribution and the channel is said to be a Rician fading channel, shown in Fig. 2c. The Rician K-factor is the ratio of the power in the direct signal (fixed) to the total power received via indirect scattered

paths. For fixed installations short-term amplitude variations in the received signal are generally caused by multipath reflections and shadowing from moving objects. Mobile reception is generally non-line of sight (Rayleigh fading), and signals are received indirectly from reflections and refractions with an even greater propensity for fading. Trees and road vehicles are major contributors but time variant multipath fading is also known to arise from bodies of water and buildings. Transmit diversity can improve non line of sight reception provided multiple signals are received with decorrelated fading, and that the receiver can effectively process the signals to its advantage. Diversity exploits the statistical nature of fading due to multipath reducing the likelihood of deep fading. Uncorrelated fading can be achieved through careful selection of spatial separation of the transmit antennas and by applying phase effects to the signals that help to decorrelate them in the time domain.

As for the MIMO channel, there can be N transmit antennas and M receive antennas, and we assume that the MIMO channel is spatially separated sufficiently to ensure decorrelation of the multipath signals. The benefits of MIMO diversity are realized when the fading on received signals from the two channels are decorrelated (i.e., they are fading independently), as shown in Fig. 2d. In this case it is much less likely that both signals are in a deep fade at the same time; therefore, a smaller fade margin can be allowed for, and acceptable coverage can be predicted at a lower mean received signal strength.

Spatial Antenna Diversity

This section describes the application of delay diversity (DD), CDD, phase diversity (PD), and maximum ratio combining (MRC) to spatial transmit/receive antenna diversity systems. These diversity techniques can easily be applied to the existing DVB system standard with little effort and without impact on the standards.

In general there are three ways of applying transmit diversity;

- Implicit or explicit channel information can be fed back from the receiver to the transmitter to configure the transmitter, which can switch the diversity parameters according to the information. In practice, however, due to transmission time, vehicle movements or dynamic interference can cause a mismatch between the channel information as perceived by the transmitter and that perceived by the receiver. Up and down transmission links are essential for this approach, so it is unsuitable for broadcast networks.
- Linear processing at the transmitter can spread the information across antennas; the transmitter will send training data to the receiver for it to estimate the channel state information, and this estimate is used to compensate for the channel response at the receiver. This capability can be exploited for DD, CDD, and PD in broadcast networks since only a downlink is required, with channel state information being obtained from the training and pilot data.
- Diversity can be provided with multiple transmit antennas combined with an appropriately designed channel code and interleaver pair. A disadvantage of this scheme is that the channel code leads to a loss in bandwidth efficiency.

In our system we investigate DD schemes combined with the DVB channel code and interleaver, which are categorized as a combination of the second and third choices in the above list.

Delay Diversity

For delay diversity the same information is transmitted from both antennas simultaneously but with a delay of several symbol intervals. The information signal is encoded by a channel coder, and the output of the repetition code is split into N parallel data streams, which are transmitted with a symbol delay between them. Figure 3 shows an OFDM system with spatial transmit diversity applying DD/CDD/PD/MRC. The cyclic extension is the DVB guard interval and is inserted before the delay shift, as shown in Fig. 3. UC means upconversion from the baseband into the radio frequency (RF) band, and DC means downconversion from the RF band to the baseband. δ_n denotes simple time shifts. To increase the frequency selectivity by multiple transmit antennas, the delays of different antennas δ_n have to be chosen as $k\{n/B\}$. B is the bandwidth of the transmitted signal.

k is a constant factor introduced for the system design that has to be chosen large enough in order to guarantee a diversity gain; $k = 2$ is sufficient to achieve promising performance improvements. To avoid ISI, the time delays plus the multipath channel delay spread must be less than the guard interval length. The disadvantage of DD is that additional delays increase the total delay spread at the receiver antenna, and an extension of the guard interval duration may be required, reducing the bandwidth efficiency of the system. This disadvantage can be overcome by CDD.

The disadvantage of DD is that additional delays increase the total delay spread at the receiver antenna, and an extension of the guard interval duration may be required, reducing the bandwidth efficiency of the system. This disadvantage can be overcome by CDD.

Cyclic Delay Diversity

Figure 3 also shows the block diagram of an OFDM system with CDD. The difference between DD and CDD is the position of the guard interval process. Figure 4 shows the difference between DD and CDD in the time domain. The cyclic extension is the guard interval for each OFDM symbol. δ_{cy} is the delay for CDD, and δ is the delay for DD ($\delta_{cy} = \delta$). τ_g is the guard time, and $\tau_{\max}$ is the channel maximum delay spread ($\tau_g > \tau_{\max}$). The reference signal is undelayed and transmitted for both DD and CDD.

The DD signal is a simple copy of the reference signal, but, delayed by δ, ISI can be caused by the guard interval partly overlapping the subsequent OFDM symbol in the reference signal at δ. In CDD there is no overlapping; the OFDM symbols for CDD can be generated from the reference signal symbols just by applying a cyclic time shift δ_{cy} and subsequent insertion of the cyclic prefix. In this case the signal is not truly

DVB-H is based on DVB-T and designed for mobile reception. It is a coded OFDM system containing an outer shortened Reed-Solomon code concatenated with an inner (punctured) convolutional code. For DVB-H three modules have been added in the DVB-T physical layer.

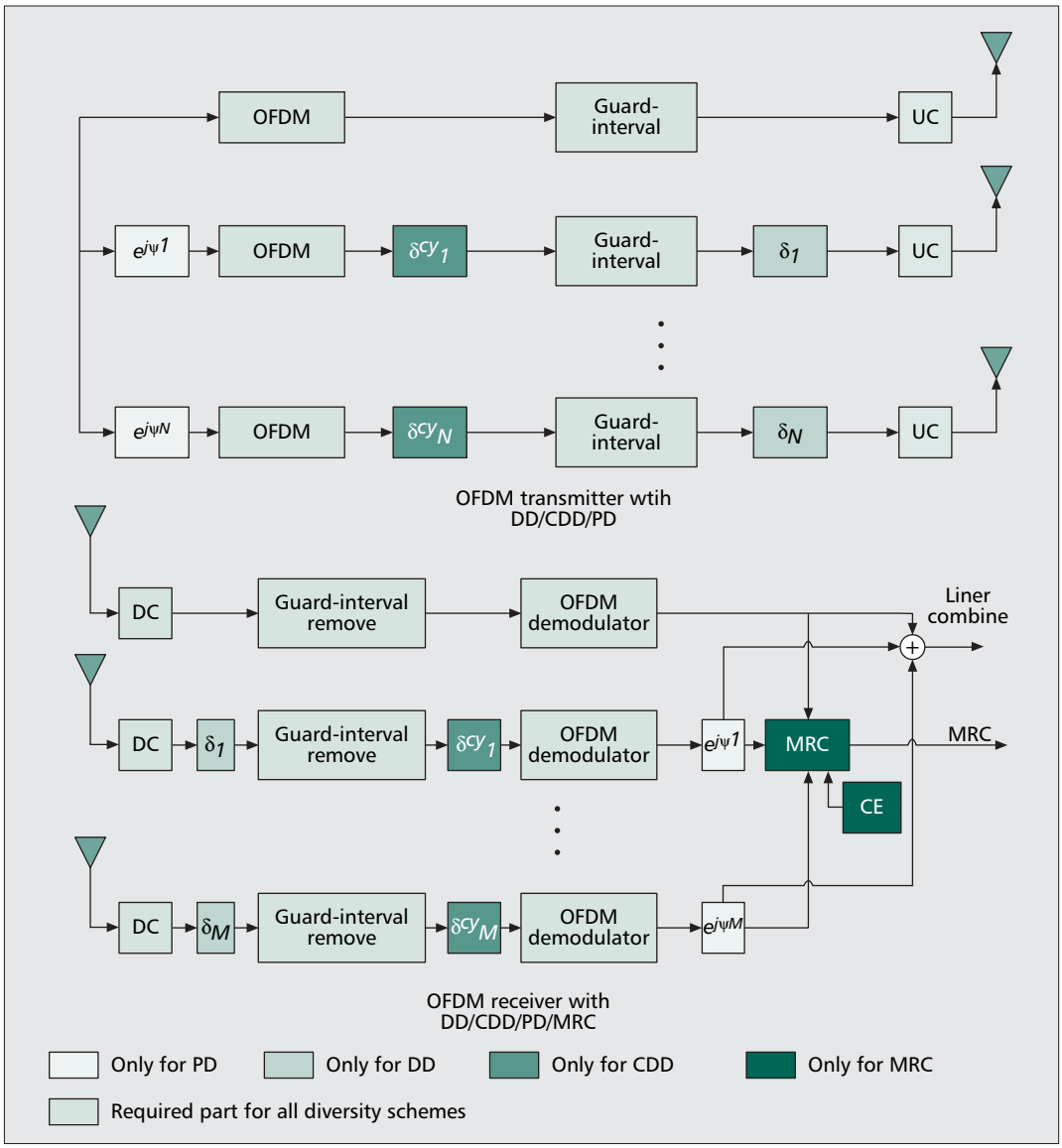

Figure 3. *An OFDM system with CDD/DD/PD/MRC.*

delayed between respective antennas but cyclically shifted; thus, there are no restrictions on the delay times, and there is no ISI. The impact of the receiver on DD and CDD schemes are similar since the required signal processing is performed in the time domain, and the DFT does not need to be duplicated for each receive antenna branch; thus, there is no increase in computational cost of the receiver. Moreover, it is possible to apply CDD as a transmit diversity technique without knowing the channel information at the transmitter.

CDD has transformed the MIMO channel into a single-input multiple-output (SIMO) channel with increased frequency selectivity. The effect is illustrated in Fig. 5. In a flat fading channel, where two signals of similar power have been received with a half wavelength delay, the bit error rate (BER) will be the same for each subcarrier, and CDD transforms the flat fade into frequency selective fades. The average BER for uncoded transmission will be similar to that in a flat fading channel; however, the BER is now not constant over the subcarriers, and an outer forward error correction (FEC) coder and decoder in conjunction with channel equalization can use the frequency selectivity to its advantage by emphasizing data on the strong subcarriers to overcome data on the weak ones.

Phase Diversity

The application of phase diversity (PD) is also illustrated in Fig. 3, PD and CDD are processed in a similar way by the receiver since a cyclic delay in the time domain corresponds to a fixed phase factor in the frequency domain. PD has to be processed in the transmitter before OFDM modulation and there is no resulting delay of the signals at the transmit antennas. CDD and PD are independent of the guard interval and are able to increase the channel frequency selectivity without increasing the overall channel delay spread since these operations are computed before guard interval insertion and are restricted to the OFDM symbol itself.

Receive Diversity

The use of multiple antennas at the receiver, referred to as receive diversity, is exploited by using MRC. The signals from M receive antennas are combined linearly so as to maximize the instantaneous SNR [9]. This is achieved by combining the co-phased signals, making use of each of the receiver's channel state information (CSI) to estimate the channel impulse response and compensate for channel effects including delay and phase. The SNR of the combined signal is equal to the sum of the SNR of all the branch signals. For an MRC system, illustrated in Fig. 3, the combining operations are performed at the subcarrier level after the DFT operation. CE in Fig. 3 means channel estimation. The received OFDM signals at different antenna branches are first transformed via M separate OFDM demodulator whose outputs are assigned to N diversity combiners. In the MRC process each individual demodulated received signal is linearly combined, prior to equalization [7], the MRC scheme effectively optimizes the SNR for each subcarrier.

Application to the DVB-H System

The above mentioned techniques can be applied to broadcasting systems and still comply with the DAB and DVB-T/H standards, in this section, we examine application of CDD and MRC to the DVB-H system.

DVB-H is based on DVB-T and designed for mobile reception. It is a coded OFDM system containing an outer shortened Reed-Solomon (RS) code concatenated with an inner (punctured) convolutional code. For DVB-H three modules have been added in the DVB-T physical layer. One is 4k transmission mode, one is DVB-H transmission parameter signaling (TPS), and the other is in-depth interleavers. The 4k mode provides for 4096 carriers and has been added to the 2k and 8k modes of the DVB-T standard. The 4k mode brings additional flexibility in network design by providing better support for SFNs and allowing high-speed reception. In the DVB-T system the 2k transmission mode has been shown to provide better mobile reception performance than 8k due to the larger intercarrier spacing; however, the associated guard intervals are very short due to the duration of the 2k mode OFDM symbols. This makes the 2k mode only suitable for small SFNs, whereas the 4k OFDM symbol's longer duration and longer guard interval makes it suitable for medium size SFN networks increasing the spectral efficiency for those networks. The symbol duration of 4k mode is shorter than the 8k mode enabling more frequent channel estimation computations in the receiver, required for a rapidly changing channel during mobile reception. 4k mode therefore provides a good trade-off between spectral efficiency for DVB-H network designers and high mobility for DVB-H consumers. According to [8], the parameters of 4k mode are shown in Table 1.

In order to apply CDD at the DVB-H transmitter, only a second signal path after the OFDM modulation has to be added. After channel coding (RS and Convolutional Coding) and interleaving, the bit-stream is mapped to complex value QAM symbols. The "Frame Adaption" functional block is responsible for QAM symbol interleaving, pilot insertion and transmission parameter signaling (TPS). The resulting symbol stream is OFDM-modulated split, up-converted and transmitted directly for one antenna and cyclically shifted for the other. The cyclic shift has to be added after modulation.

An MRC receiver is implemented in the simulation model. After down-conversion, synchronization and guard interval removal, the received OFDM signal is demodulated and equalized using zero forcing, the model assumes perfect knowledge of the channel state information. Both complex valued symbol streams are combined and QAM demodulated with soft-out values before symbol and bit-deinterleaving is computed. Finally, the bit stream is soft-decision-maximum-likelihood (SDML) decoded in a Viterbi decoder.

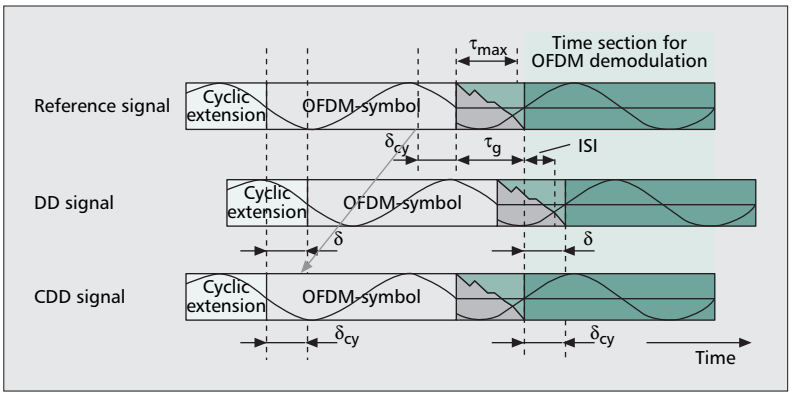

Figure 4. *DD and CDD signals in time domain [7].*

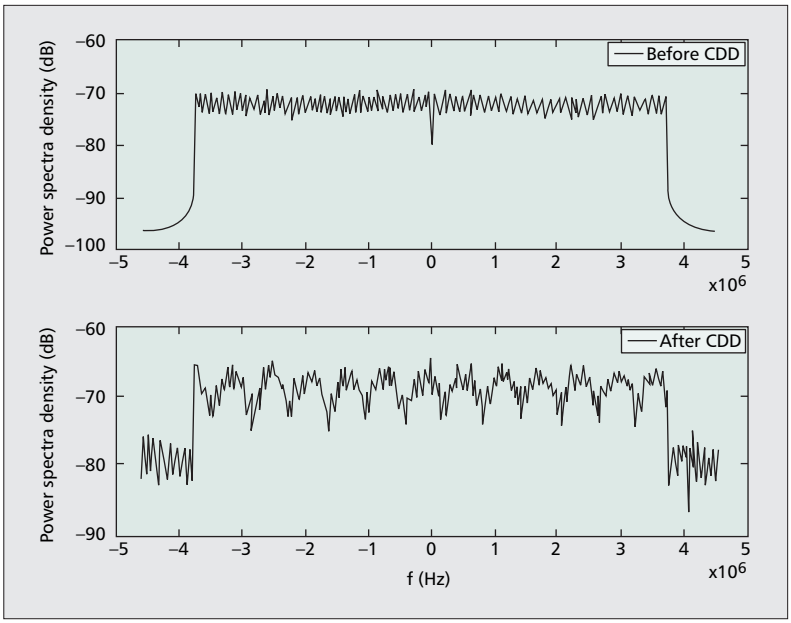

Figure 5. *Power spectra density of signals before CDD and after CDD UHF (900mHz).*

Parameter	4k mode			
Elementary period T	7/64 μs			
Number of carriers	3409			
Value of carrier number K_{min}	0			
Value of carrier number K_{max}	3408			
Duration T_u	448 μs			
Carrier spacing 1/ T_u	2232 Hz			
Spacing between carriers K_{min} and K_{max}	7.61 MHz			
Allowed guard interval τ/ T_u	1/41/8	1/16	1/32	
Duration of symbol part T_u	4096 x T 448 μs			
Duration of symbol interval τ	1026 x T	512 x T	256 x T	128 x T
	112 μs	56 μs	28 μs	14 μs
Symbol duration $T_s = \tau + T_u$	560 μs	504μs	476 μs	462 μs

Table 1. *OFDM parameters for the 4k mode.*

Simulations

In this section we present simulation results for DVB-H performance with antenna diversity in typical urban (TU) and rural area (RA) using a UHF (900 MHz) frequency channel. The simulations include Doppler effects and are according to the Monte Carlo method. The overall transmitted power is the same for all simulation runs, and the total transmit power from N antennas is equal to the transmit power with 1 antenna; the power per transmit antenna decreases as the number of antennas N increases. The antennas are placed such that their channel transfer functions can be considered uncorrelated. A maximum of two antennas were used at the transmitter and receiver sides for these simulations. A cyclic delay of

$$\delta_{cy} = 15 \cdot \frac{T_u}{K} \approx 1.6\ \mu s \geq \frac{1}{B} \approx 0.13\ \mu s$$

was chosen for the BER vs. SNR simulations of the 2TX-antenna CDD systems, and the velocity of the mobile user is 10 m/s. Diversity with MRC is assumed at the receiver. Figure 6a shows the BER vs. SNR for a channel in a simulated TU scenario with CDD applied to the DVB-H system, in 4k mode with 4-quadrature amplitude modulation (QAM) and code rate 1/2 in UHF. A single-antenna system with no spatial diversity is given as a reference.

According to Fig. 6a, the system with receiver MRC outperforms a single-receive--antenna system by about 6 dB, helped by the fact that the second receive antenna provides additional signal power. In the case of transmit diversity in a TU channel, there is about 4 dB gain in SNR at a BER of 2×10^{-4}. The powerful channel codes provide additional coding gain besides diversity gain. In the case of an RA channel illustrated in Fig. 6b, TX diversity provides about 9 dB gain in SNR at a BER of 2×10^{-4}; this is much higher than the TU case since a TU channel has a maximum delay of 5 μs compared to the delay in an RA channel of 700 ns. Perfect knowledge of the CSI and synchronization has been assumed. Theoretical maximum diversity and coding gain are illustrated by simulating an optimal interleaver with convolutional coding, illustrated in Fig. 6c, which shows approximately 5 dB code gain for the system with two transmit antennas.

Conclusions

In this article the principles of delay diversity, cyclic delay diversity, phase diversity, and maximum ratio combining have been discussed. The equivalence between cyclic delay diversity and phase diversity has been identified. The application of CDD to a DVB-H system has been simulated. CDD can potentially achieve spatial diversity and coding gain of at least 5 dB. CDD is an elegant low-cost transmit diversity technique for coded OFDM that can provide full spatial and coding diversity. CDD could potentially be accommodated by existing broadcasting systems without changing the standards or receivers, and the number of transmit antennas appears to be arbitrary. CDD presents a potential open diversity architecture for future broadband wireless broadcast networks.

References

[1] ETSI, "Digital Video Broadcasting (DVB); Framing Structure, Channel Coding and Modulation for Digital Terrestrial Television," July 1999, EN 300 744 V1.2.1.

[2] S. B. Weinstein and P. M. Ebert, "Data Transmission by Frequency Division Multiplexing Using the Discrete Fourier Transform," *IEEE Trans. Commun.,* vol. COM-19, no. 15, Oct. 1971, pp. 628–34.

[3] R. van Nee *et al.*, "New High-Rate Wireless LAN Standards," *IEEE Commun. Mag.*, Dec. 1999, pp. 82–88.

[4] J.-C. Guey *et al.*, "Signal Designs for Transmitter Diversity Wireless Communication System over Rayleigh Fading Channels," *Proc. VTC '96*, pp. 136–40.

[5] V. Tarokh, N. Seshadri, and A. Calderbank, "Space-Time Codes for High Data Rate Wireless Communications: Performance Criterion and Code Construction," *IEEE Trans. Info. Theory*, vol. 44, Mar. 1998, pp. 744–65.

[6] S. Alamouti, "A Simple Transmitter Diversity Scheme for Wireless Communications," *IEEE JSAC*, vol. 16, Oct. 1998, pp. 1451–58.

[7] A. Dammann and S. Kaiser, "Transmit/Receive Antenna Diversity Techniques for OFDM Systems," *Euro. Trans. Telecommun.*, vol. 13, no. 5, Sept.–Oct. 2002, pp. 531–38.

[8] ETSI, "Digital Video Broadcasting (DVB); DVB-H Implementation Guidelines," Feb 2005, TR 102 377 V1.1.1.

[9] J. Heiskala and J. Terry, *OFDM Wireless LANs: A Theoretical and Practical Guide*, Sams, Dec. 2001.

Biographies

YUE ZHANG (Yue.Zhang@brunel.ac.uk) studied telecommucation engineering at Beijing University of Posts and Telecommunications, P.R. China, and received B.Eng. and M.Eng. degrees in 2001 and 2004, respectively. In 2004 he was a Ph.D. student in the Department of Electronic and Computer Engineering, Brunel University, United Kingdom. He is currently a research assistant of the Networks and Multimedia Communications Centre at Brunel University. His research interests are digital signal processing, space-

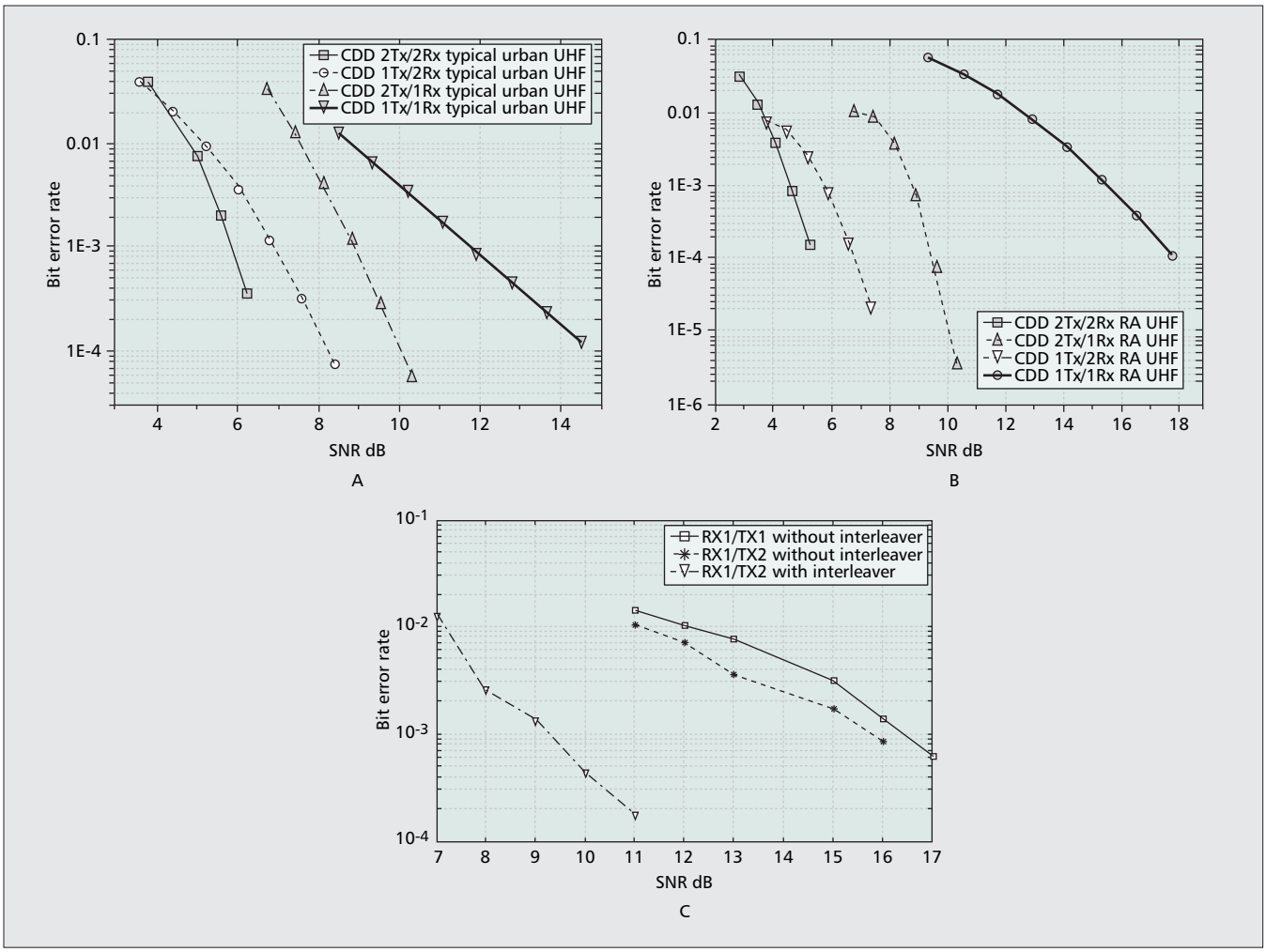

Figure 6. *Simulation results.*

time coding, MIMO, radio propagation models, multimedia and wireless networks, and DVB-T/H.

JOHN COSMAS [M'87] (John.Cosmas@brunel.ac.uk) obtained a B.Eng. honors degree in electronic engineering at Liverpool University in 1978 and a Ph.D. in image processing and pattern recognition at Imperial College in 1987. He is a professor of multimedia systems and became Member of IEE in 1977. His research interests are concerned with the design, delivery, and management of new fourth-generation TV and telecommunications services and networks, multimedia content and databases, and video/image processing. He has contributed toward eight EEC research projects, and has published over 80 papers in refereed conference proceedings and journals. He leads the Networks and Multimedia Communications Centre within the School of Engineering and Design at Brunel University.

MAURICE BARD graduated from Imperial College in 1976 with a B.Sc. (Hon) in materials science and worked initially on traveling wave tube design, electronics systems, and software. He has succeeded in a number of engineering, sales and marketing roles during a 20-year career at Nortel Networks. While there he founded and managed a business providing GPS simulators to a world market before moving on to establish a new fixed wireless product line that deployed 1million lines around the world. He left to join PipingHot Networks in 2000, a wireless startup that is now established as an international provider of non-line-of-sight radio links using similar principles to those proposed here. More recently he has been working as an independent consultant in the wireless, broadcast, and GPS industries.

YONG-HUA SONG [SM] received his B.Eng., M.Sc., and Ph.D. in 1984, 1987, and 1989, respectively. In 1991 he joined Bristol University, and then held various positions at Liverpool John Moores University and Bath University before he joined Brunel University in 1997 as professor of network systems in the Department of Electronic and Computer Engineering. Currently he is director of tje Brunel Advanced Institute of Network Systems and pro-vice-chancellor of the university. He has published four books and over 300 papers mainly in the areas of applications of intelligent and heuristic methods in engineering systems. He was awarded the Higher Doctorate of Science in 2002 by Brunel University for his significant research contributions. He is a fellow of the IEE and the Royal Academy of Engineering.