The effect of aerosol-deposited ash components on a cobalt-based Fischer-Tropsch catalyst

Ljubiša Gavrilović[a,*], Jan Brandin[b], Anders Holmen[a], Hilde J. Venvik[a], Rune Myrstad[c], Edd A. Blekkan[a,]

[a] *Norwegian University of Science and Technology, Department of Chemical Engineering, Sem Sælands vei 4, 7491 Trondheim, Norway*

[b] *Linnæus University, Department of Built Environment and Energy Technology, 351 95 Växjö, Sweden*

[c] *SINTEF Industry, NO-7465 Trondheim, Norway*

Corresponding author: ljubisa.gavrilovic@ntnu.no

Abstract

The effect of ash salts on Co-based Fisher-Tropsch catalysts was studied using an aerosol deposition technique. The major elements in the ash were found to be K, S and Cl. The ash was deposited on a calcined catalyst as dry particles with an average diameter of approx. 350 nm. The loading of ash particles was varied by varying the time of exposure to the particles in a gas stream. Catalyst characterization did not reveal significant differences in cobalt dispersion, reducibility, surface area, pore size, or pore volume between the reference and the catalysts with ash particles deposited. Activity measurements showed that following a short exposure to the mixed ash salts (30 minutes), there were no significant loss of activity, but a minor change in selectivity of the catalyst. Extended exposure (60 minutes) led to some activity loss and changes in selectivity. However, extending the exposure time and thus the amount deposited as evidenced by elemental analysis did not lead to a further drop in activity. This behavior is different from that observed with pure potassium salts, and is suggested to be related to the larger size of the aerosol

particles deposited. The large aerosol particles used here were probably not penetrating the catalyst bed, and to some extent formed an external layer on the catalyst bed. The ash salts are therefore not able to penetrate to the pore structure and reach the Co active centers, but are mixed with the catalyst and detected in the elemental analysis.

1. Introduction

Biomass to liquid fuels (BTL) via gasification and Fischer-Tropsch synthesis (FTS) is an attractive process for production of liquid fuels (diesel and jet fuel)[1]. The process involves gasification of biomass where synthesis gas ($CO + H_2$) is produced. Following cleaning and gas conditioning, the synthesis gas is converted to hydrocarbons *via* the Fischer-Tropsch synthesis[2]. During biomass gasification, the inorganic species are usually converted into bottom ash or fly ash[3]. Alkali salts (mainly potassium) are the dominant salts in the ash composition after biomass gasification[4]. Pagels *et al*.[4] reported the formation of fine particles (around 100 nm) during biomass combustion containing mainly the elements K, S, and Cl in the produced gas stream. It was reported[5, 6] that potassium species (KCl and K_2SO_4) in the form of submicron aerosols can be deposited on the external catalyst surface. Froment *et al*.[7] performed thermodynamic equilibrium calculations during wood gasification and concluded that potassium will be semi-volatile in the form of hydroxide, carbonate and chloride. The removal of these species from syngas from a circulating fluid bed, down to a level where they have no influence on a cobalt-catalysed FTS process, has been demonstrated using standard equipment such as ZnO and active carbon filters) [6]. However, imperfections in the cleaning section or poor design can allow the presence of these components in the produced syngas. Deactivation of Co based Fischer-Tropsch (FT) catalyst by alkali species is known from before[8–14]. In previous communications we have

shown that aerosol deposition of potassium nitrate[15] or potassium salts expected to be present in syngas from high-temperature gasification of biomass[16], lead to a similar deactivation of a Co-based catalyst. In both cases, and similar to the results obtained using liquid phase deposition of the salts, it is however difficult to observe any measurable change in the catalyst characteristics following deposition. This implies that the deactivating species somehow is transported to the active sites of the catalyst during pretreatment or reaction[9, 10, 15, 16]. In this communication we aim to investigate the influence of impurities present in the real feed, by collecting a sample of fly ash from burning charcoal and depositing this ash on a cobalt-based FTS catalyst. The produced ash was expected to contain a realistic mixture of inorganic contaminants, which potentially can reach the FTS catalyst in a BTL plant.

2. Experimental

2.1. Catalyst exposure by aerosol deposition of ash salts

The reference catalyst (20%Co/0,5%Re/γ Al_2O_3, for the detailed description of catalyst synthesis see[15]) was poisoned using the aerosol deposition technique. The equipment used is shown in Fig. 1. A detailed description of apparatus is given elsewhere[17]. In short, the catalyst bed is placed in the middle of the tubular quartz reactor inside of electrically heated oven. The lower part of the catalyst bed consists of a glass frit, which allows the gas to pass through. The ash salt solution was prepared by sequentially dissolving the fly ash (produced from burning charcoal) in deionized water and then the solution was filtered several times. The produced ash solution (8.7mg/dm^3) was placed in the atomizer deposited by flowing gas through the atomizer and through the catalyst sample. The deposition time was varied from 30 minutes, 60 minutes and

300 minutes with the corresponding sample names Ash1, Ash2 and Ash3, respectively. All the deposition experiments were performed at 573K and 1 bar on calcined catalyst samples. The drying time of the generated particles at these conditions is in the range of milliseconds, while the residence time of the gas in the oven is several seconds[18].This means that the aerosol particles are completely dry and the salt is transported and deposited in the form of solid particles on the catalyst. A scanning mobility particle sizer (SMPS; TSI Inc.) consisting of a differential mobility analyzer (DMA; TSI Inc. Model 3081) was used to physically characterize aerosol particles according to their electrical mobility[17, 18]. This technique provides an estimate of the particle size distribution. Inductively coupled plasma (ICP-MS) was used to determine ppm levels of ash components. The samples (10-20 mg) were added to 1.5 ml of conc. HNO_3 in a 205 ml PFA (high-purity Perfluoroalkoxy) bottle, shaking occasionally for some minutes. Ultra-purified water was added, and the flask was left for approximately one hour. Then the solution was further diluted to achieve approximately 0.1 M total acid concentration and analyzed by ICP-MS.

Figure 1. Experimental setup for catalyst exposure to the aerosol particles at 573 K.

2.2. Catalyst characterization

Volumetric adsorption of N_2 was performed on a Tristar II 3020 to determine surface area, pore volume and average pore dimeter of the catalyst before and after aerosol deposition. Before measurement at liquid nitrogen temperature, the samples (~70mg 53-90µm) were outgassed in vacuum, first at ambient temperature for 1h and then at 473 K overnight. The Brunauer-Emmet-Teller (BET)[19] isotherm was used for calculation of the surface area and the Barret-Joyner-

Halenda (BJH)[20] method was applied to determine pore volumes and average pore diameters of the samples using the desorption branch of the isotherm.

H_2-chemisorption was performed using a Micromeritics ASAP2010 unit. The catalyst sample (0.2 g) was loaded in the chemisorption reactor. To keep the catalyst in place for the measurement, it was placed between quartz wool wads. Prior to chemisorption, the sample was reduced *in situ*. The sample was heated with a ramping rate of 60 K/h from ambient temperature to 623 K and kept at this temperature in flowing hydrogen for 16 h. The samples were then cooled to 313 K under vacuum. Chemisorption data was collected at 313 K between 0.020 and 0.667 bar H_2 pressure. It was assumed that each surface cobalt atom was one H chemisorption site and that neither Re, ash impurities nor the support contributed to chemisorption.

Temperature programmed reduction (TPR) experiments were performed in an Altamira AMI-300RHP. The catalyst sample (100 mg) was loaded in a quartz u-tube reactor between wads of quartz wool. First the catalyst was treated in inert gas at 473 K and then reduced in hydrogen flow (7% H_2/Ar 50ml/min) to a temperature of 1173 K with a ramp rate of 10 K/min. After reaching the final temperature, samples were cooled down to room temperature.

2.3 Fischer–Tropsch synthesis

Fischer–Tropsch synthesis was carried out in four parallel 10 mm ID steel tube fixed bed reactors at 483 K, 20 bar and H_2/CO ratio of 2.1. The samples (1 g) were diluted with inert SiC (20 g) to improve heat distribution and loaded between quartz wool wads to keep the catalyst in place. To further improve heat distribution aluminium blocks were fixed around the reactors and the reactors were placed in four separate electrical furnaces equipped with thermocouples for

temperature control and monitoring. After leak tests with He the pressure was kept at 1.5 bar and flowing H_2 was introduced and the catalysts were reduced. To reach the reduction temperature of 623 K, the samples were heated with a ramping rate of 1 K/min up to the target temperature which was kept for 16 h. After reduction, the samples were cooled to 443 K. Before introduction of syngas (250 Nml/min) the reactors were pressurized with He to the operating pressure of 20 bar. The temperature program was set to increase the temperature first from 443 to 463 K with a ramping rate of 20 K/min and to the final temperature of 483 K with a ramping rate of 5 K/min. Liquid Fischer Tropsch products, wax and other liquids (water and light hydrocarbons), were collected in a hot trap at ~360 K and a cold trap at ambient temperature, respectively. The light gases were analyzed using a HP 6890 gas chromatograph. H_2, N_2 (internal standard), CO, CH_4 and CO_2 were analyzed on TCD following separation on a Carbosieve column. Hydrocarbon products were separated with a GS-Alumina PLOT column and detected on flame ionization detector (FID). CH_4 was used to combine TCD and FID analysis. The synthesis gas contained 3% N_2 which served as an internal standard for quantification of the products to close the mass balance. After ~24 h time on stream (TOS) activity data is reported based on measurements at constant feed rate (250 Nml/min). Then the feed rate of synthesis gas was adjusted to obtain ~50% CO conversion. Selectivity data based on the analysis of C_1–C_4 hydrocarbons in gas phase are reported after ~48 h time-on-stream (TOS) at 50 ± 5% CO conversion. Since the focus is on the amount of higher hydrocarbons, the selectivity is reported in the usual way as C_5+ and CH_4 selectivity.

3. Results and discussion

The generated aerosol particles from ash salts have been characterized by SMPS (in the range ~20– 700 nm). The mass size distribution (μg/m^3) of generated ash particles is shown in Fig. 2. The size distribution ranges from approximately 75 nm up to the cut off of the instrument range (700 nm) with an apparent mass average size around 400 nm. This is considerably larger than the particles formed from pure potassium salts (average diameters 200-230 nm)[16] in the same setup. The particle size is a function of the concentration in the atomizer, and thus a consequence of using a strong solution of ash components. The ash-salt particle size is significantly larger than the average pore-size of the material, consequently following deposition are the ash-components only in direct contact with the external surface of the catalyst particles.

Figure 2. Mass size distribution of ash produced aerosol particles

ICP-MS was used to determine the concentration of ash components on the treated catalysts. The general trend is that the concentration of each element increased with increasing the deposition time (Table 1). As it was expected potassium is the dominant element, but there are also significant concentrations of sulfur and chlorine. This indicates that potassium salts such as K_2SO_4 and KCl are the main components in the ash. There are also traces of other metals such as magnesium and iron. Iron is active for the FTS, but the concentration is too low to provide any significant catalytic activity.

Table 1. Concentration of ash components on the catalyst following aerosol deposition (wt ppm).

Key characterization results are presented in Table 2. All the poisoned samples showed the same dispersion (approx. 7.5%), surface area (approx. 135 m^2/g), pore size (approx. 13.3 nm) and pore volume (0.47 cm^3/g), all close to the values measured for the reference catalyst. This is in

agreement with previous work[16] where different potassium salts (single salts) were deposited on the Co-based catalyst based using the same technique as applied here.

Table 2. Characterization results

The TPR profiles of poisoned and reference catalysts are presented in Fig 3. All the samples showed almost the same profile, previously observed for alumina-supported cobalt catalysts[21]. The first major peak represents the transition from Co_3O_4 to CoO at around 603 K and the second peak represents the second step of the reduction, the transition from CoO to Co at around 700 K. Besides the major reduction peaks, a small peak close to 500 K is observed for the reference sample. This peak is attributed to the reduction of residual cobalt nitrate[22]. This peak is absent for the poisoned catalysts, probably due to the added thermal treatment during the aerosol deposition. There appears to be a slight reduction in the peak temperatures for the poisoned samples, most prominent for the second reduction step, but the effect is very small. Previously, De la Osa *et al*.[23] reported that alkali or alkaline-earth metals favor reducibility compared to an unpromoted alumina-supported cobalt catalyst, but in their samples the alkali (1 %) was impregnated on the support prior to the cobalt impregnation step, which is not the case in the present work. To conclude, that there is no significant effect of the ash on TPR profiles which is in agreement with our previously published work[16].

Figure 3. TPR profiles of temperature vs hydrogen consumption of standard catalyst and catalysts with different ash salt loadings

Catalyst activity reported as STY (site time yield) is presented in Fig 4a. The sample with the shortest exposure to the ash salts (Ash1) showed the same activity as the reference catalyst, while the samples with longer exposure and higher concentrations of ash components showed a small but significant loss in activity. The selectivities to C_{5+}, CH_4 and CO_2 are reported in Figs. 4 b), c) and d), respectively. The selectivity towards higher hydrocarbons (S_{C5+}, Fig 4 b)) increases with increasing ash concentration, while the methane selectivity (S_{CH4}, Fig. 4 c)) decreased. There was also a clear increase in the selectivity to CO_2, Fig 4 d). These selectivity changes are similar to those observed previously using pure potassium salts[9, 10, 16]. The combined evidence indicates that also in the case of aerosol deposition of mixed ash salts is there a significant effect on the cobalt FTS catalyst, but the effect is less severe than that observed for potassium salts. Zheng *et al*.[24] investigated deactivation of a commercial type V_2O_5-WO_3-TiO_2 Selective Catalytic Reduction (SCR) catalyst by aerosol deposition of potassium compounds and concluded that there was no deactivation when the catalyst was exposed to the ash salts collected from biomass combustion, while a fast deactivation was observed when the catalyst was exposed to the pure potassium salts (KCl, K_2SO_4). This could be linked with the physical nature of the particles, the particles are significantly larger than those deposited from pure potassium salts, and the transport of alkali and other species from the external surface to the internal surface of the catalysts is probably more difficult, either because of the physical distance or that the activation and transport of the ash components is slower due to the larger particles. This might imply that only the finest fraction of the aerosol particles is involved in the catalyst deactivation, while the deposits of large particles do not cause significant deactivation[25]. It is speculated that larger particles are less harmful to the catalyst since the deposition rate is lower and since the contact

area between aerosol particles deposited on the catalyst exterior and catalyst surface, will be lower[26].

Figure 4. Catalytic activity reported as STY (a), selectivities to C_{5+} (b), CH_4 (c) and CO_2 (d)

The main constituent of the ash is potassium, but the ash also contains other elements, such as sodium, magnesium, iron, sulfur and chlorine. The concentrations of these elements is low, and they do not appear to have a strong influence on the catalyst activity. Sulfur is however a very strong poison, and even very small concentrations are known to have a devastating effect on the activity. However, the concentration recorded here is not sufficient to give a detectable effect on the activity, even if the sulfur titrated the cobalt surface. Borg *et al.* [10] demonstrated a linear correlation between the amount of sulfur added and the decline in the activity. Approximately 300 ppm of sulfur added to the catalyst represents around 4% of the cobalt surface area assuming the surface is titrated by sulfur. However, the selectivity changes observed here are similar to those observed with alkali poisoning, whereas sulfur poisoning was concluded not to influence the C_{5+} selectivity of cobalt-catalyzed FTS [10]. This indicates that the changes in activity and selectivity observed are due to the sum of the alkali and other metallic elements deposited, and not due to the sulfur on the samples. The absence of an effect of sulfur would indicate that the sulfur is either stable in its deposited form (probably as a metal sulfate) on the external surface of the catalyst, or that the sulfur is efficiently removed from the system, either during catalyst pretreatment or in the early stages of reaction.

4. Summary and conclusions

A cobalt-based FTS catalyst was exposed to solid aerosol particles of typical biomass ash components. The most abundant elements in the ash was potassium, sulfur and chlorine, but there were also traces of other elements such as sodium, magnesium and iron. The characterization revealed no significant differences in dispersion, reducibility, surface area, pore size or pore volume. The FTS activity was slightly reduced, and the selectivity altered in the same direction as observed with pure potassium salts, indicating that deactivating species somehow is transported to the cobalt surface, similar to the effect observed previously with pure potassium salts deposited in the same manner or introduced via liquid impregnation.

Acknowledgements

Financial support from The Research Council of Norway under contract no. 228741 is gratefully acknowledged.

References

1. Van Steen E, Claeys M (2008) Fischer-Tropsch catalysts for the biomass-to-liquid process. Chem. Eng. Technol. 31:655–666

2. Serrano-Ruiz JC, Dumesic JA (2011) Catalytic routes for the conversion of biomass into liquid hydrocarbon transportation fuels. Energy Environ Sci 4:83–99 .

3. Huber GW, Iborra S, Corma A (2006) Synthesis of transportation fuels from biomass: Chemistry, catalysts, and engineering. Chem. Rev. 106:4044–4098

4. Pagels J, Strand M, Rissler J, Szpila A, Gudmundsson A, Bohgard M, Lillieblad L, Sanati M, Swietlicki E (2003) Characteristics of aerosol particles formed during grate combustion of moist

forest residue. J Aerosol Sci 34:1043–1059

5. Christensen KA, Livbjerg H (1996) A Field Study of Submicron Particles from the Combustion of Straw. Aerosol Sci Technol 25:185–199 .

6. Christensen KA, Stenholm M, Livbjerg H (1998) The formation of submicron aerosol particles, HCl and SO2 in straw-fired boilers. J Aerosol Sci 29:421–444 .

7. Froment K, Defoort F, Bertrand C, Seiler JM, Berjonneau J, Poirier J (2013) Thermodynamic equilibrium calculations of the volatilization and condensation of inorganics during wood gasification. Fuel 107:269–281 .

8. Tsakoumis NE, Rønning M, Borg Ø, Rytter E, Holmen A (2010) Deactivation of cobalt based Fischer-Tropsch catalysts: A review. Catalysis Today. 154:162–182

9. Balonek CM, Lillebø AH, Rane S, Rytter E, Schmidt LD, Holmen A (2010) Effect of alkali metal impurities on Co-Re catalysts for Fischer-Tropsch synthesis from biomass-derived syngas. Catal Letters 138:8–13

10. Lillebø AH, Patanou E, Yang J, Blekkan EA, Holmen A (2013) The effect of alkali and alkaline earth elements on cobalt based Fischer-Tropsch catalysts. Catalysis Today. 215:60–66

11. Borg Ø, Hammer N, Enger BC, Myrstad R, Lindvg OA, Eri S, Skagseth TH, Rytter E (2011) Effect of biomass-derived synthesis gas impurity elements on cobalt Fischer-Tropsch catalyst performance including in situ sulphur and nitrogen addition. J Catal 279:163–173

12. Forzatti P, Lietti L (1999) Catalyst deactivation. Catal Today 52:165–181

13. Bartholomew CH (2001) Mechanisms of catalyst deactivation. Appl Catal A Gen 212:17–60

14. Lillebø AH, Holmen A, Enger BC, Blekkan EA (2012) Fischer-Tropsch Conversion of Biomass-Derived Synthesis Gas to Liquid Fuels. WIREs Energy and Environment. 2:507-524

15. Gavrilović L, Brandin J, Holmen A, Venvik HJ, Myrstad R, Blekkan EA (2018) Fischer-Tropsch Synthesis – investigation of the deactivation of a Co catalyst by exposure to aerosol particles of potassium salt. Appl Catal B Environ. 230:203–209

16. Gavrilović L, Brandin J, Holmen A, Venvik HJ, Myrstad R, Blekkan EA (2018) Deactivation of Co-Based Fischer–Tropsch Catalyst by Aerosol Deposition of Potassium Salts. Ind Eng Chem Res 57:1935–1942 .

17. Einvall J, Albertazzi S, Hulteberg C, Malik A, Basile F, Larsson AC, Brandin J, Sanati M (2007) Investigation of reforming catalyst deactivation by exposure to fly ash from biomass gasification in laboratory scale. Energy and Fuels 21:2481–2488

18. Hinds WC (2012) Aerosol technology: properties, behavior, and measurement of airborne particles. John Wiley & Sons

19. Brunauer S, Emmett PH, Teller E (1938) Adsorption of Gases in Multimolecular Layers. J Am Chem Soc 60:309–319

20. Barrett EP, Joyner LG, Halenda PP (1951) The Determination of Pore Volume and Area Distributions in Porous Substances. I. Computations from Nitrogen Isotherms. J Am Chem Soc 73:373–380

21. Rønning M, Tsakoumis NE, Voronov A, Johnsen RE, Norby P, Van Beek W, Borg Ø, Rytter E, Holmen A (2010) Combined XRD and XANES studies of a Re-promoted Co/Re-Al2O3 catalyst at Fischer-Tropsch synthesis conditions. Catal Today 155:289–295

22. Bao A, Li J, Zhang Y (2010) Effect of barium on reducibility and activity for cobalt-based Fischer-Tropsch synthesis catalysts. J Nat Gas Chem 19:622–627

23. De La Osa AR, De Lucas A, Valverde JL, Romero A, Monteagudo I, Coca P, Sánchez P (2011) Influence of alkali promoters on synthetic diesel production over Co catalyst. Catalysis Today. 167:96–106

24. Zheng Y, Jensen AD, Johnsson JE, Thøgersen JR (2008) Deactivation of V2O5-WO3-TiO2SCR catalyst at biomass fired power plants: Elucidation of mechanisms by lab- and pilot-scale experiments. Appl Catal B Environ 83:186–194 .

25. Zheng Y, Jensen AD, Johnsson JE (2005) Deactivation of V2O5-WO3-TiO2SCR catalyst at a biomass-fired combined heat and power plant. Appl Catal B Environ 60:253–264 .

26. Olsen BK, Kügler F, Castellino F, Jensen AD (2016) Poisoning of vanadia based SCR catalysts by potassium: Influence of catalyst composition and potassium mobility. Catal Sci Technol 6:2249–2260 .

Figure

Figure 1. *Experimental setup for catalyst exposure to the aerosol particles at 573 K.*

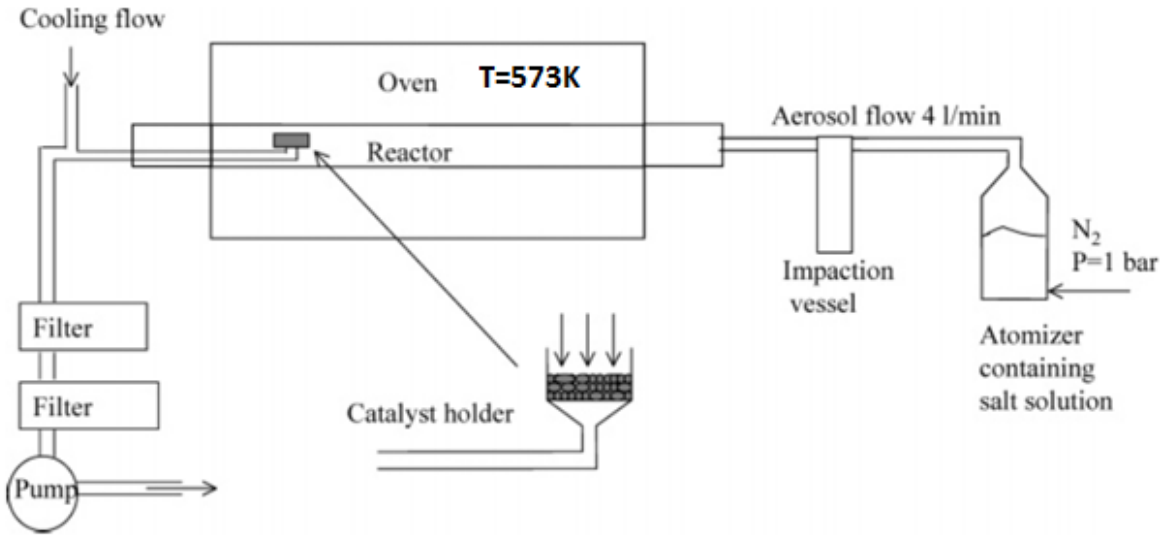

Figure 2. *Mass size distribution of ash produced aerosol particles*

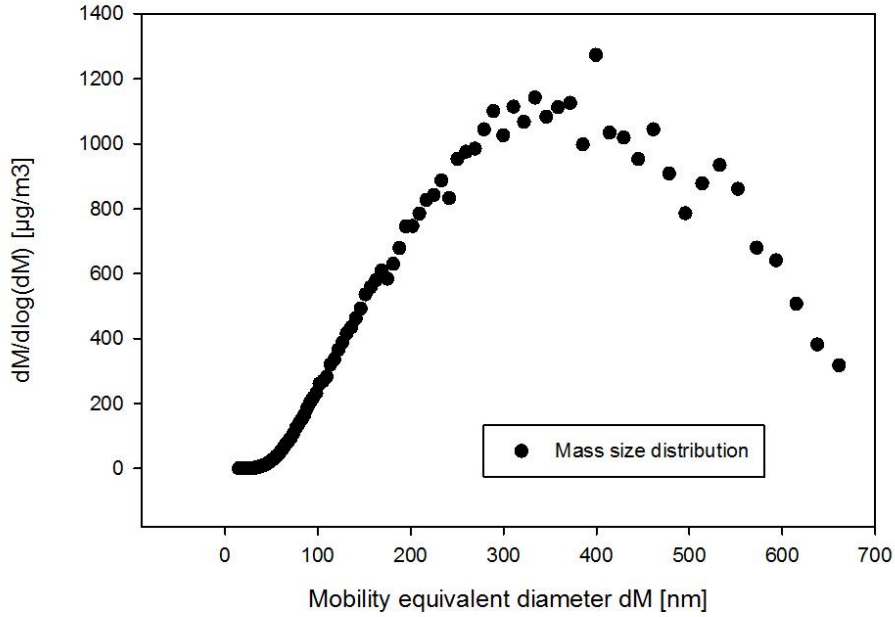

Figure 3. *TPR profiles of temperature vs hydrogen consumption of standard catalyst and catalysts with different ash salt loadings*

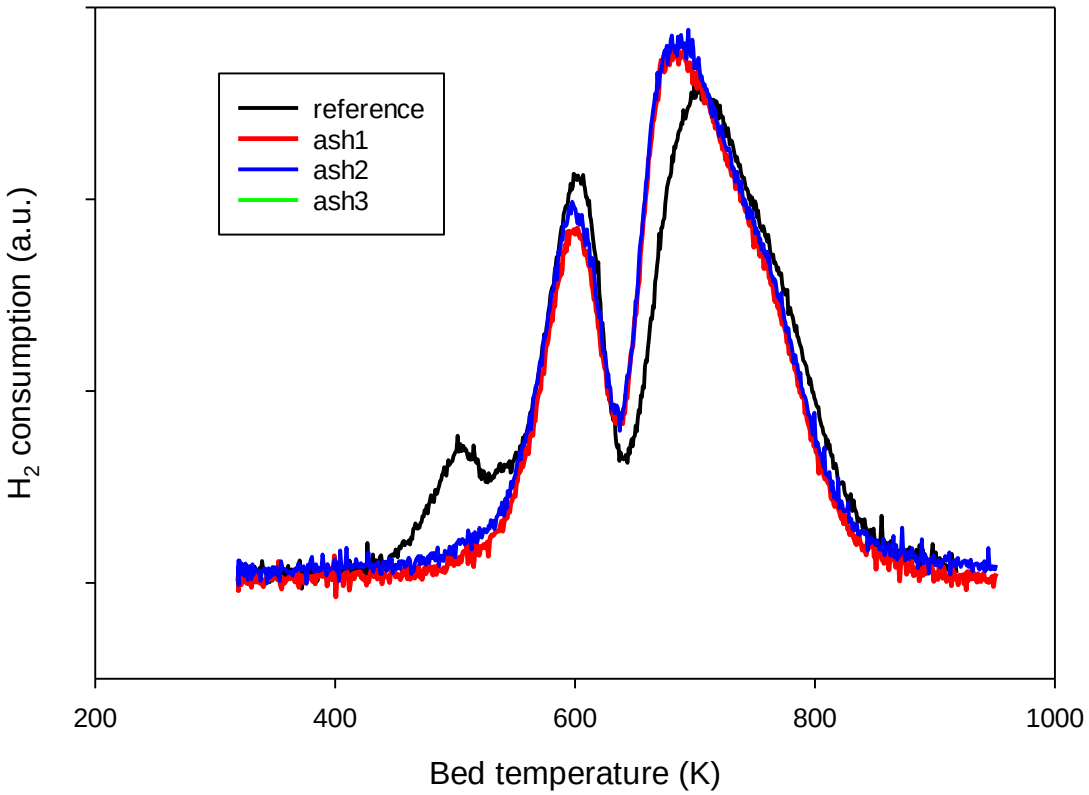

Figure 1. *Catalytic activity reported as STY (a), selectivities to C_{5+} (b), CH_4 (c) and CO_2 (d)*

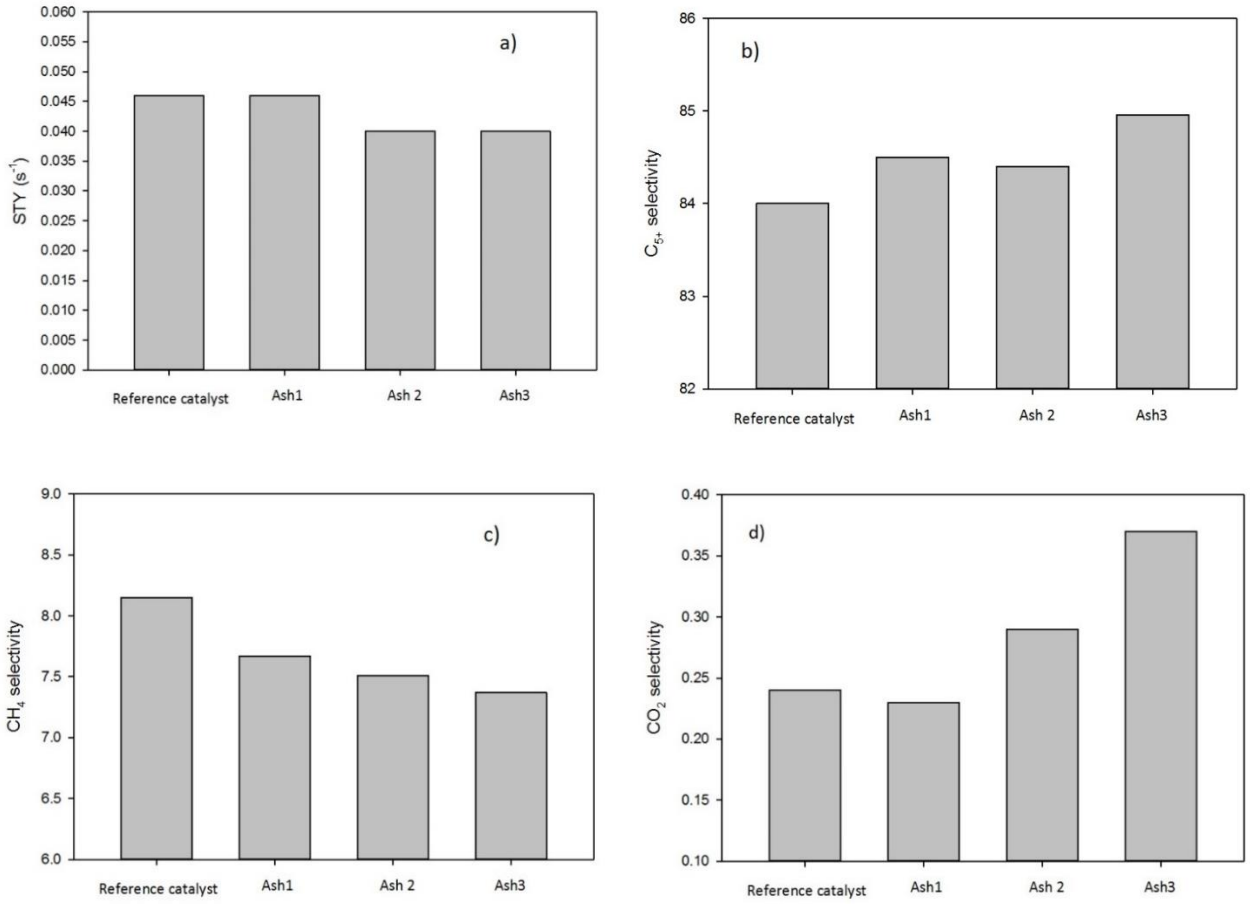

Table

Table 1. Concentration of ash components on the catalyst following aerosol deposition (wt ppm).

element	Ash1 (ppm)	Ash2 (ppm)	Ash3 (ppm)
K	233	520	1677
Na	59	46	148
Mg	28	38	61
S	293	200	359
Cl	214	328	600
Ca	13	45	45
Fe	61	66	116

Table 2. Characterization results

Salt impurity	Dispersion (%)	Bet surface area (m^2/g)	Pore volume (cm^3/g)	Pore size (nm)	Reduction temperature (K)	
					$Co_3O_4 \rightarrow CoO$	$CoO \rightarrow Co$
None	7,6	133	0,45	13,1	603	704
Ash1	7,5	135	0,47	13,2	601	683
Ash2	7,1	134	0,47	13,3	598	685
Ash3	7,9	132	0,47	13,4	595	673