1962

SCS Natinoal Engineering Handbook: Section 15, Irrigation, Chapter 9--Measurement of Irrigation Water

Soil Conservation Service

United States Department of Agriculture

SCS / ENG / NEH-15 / 9

PB85-182327

SCS
NATIONAL
ENGINEERING
HANDBOOK

SECTION 15

IRRIGATION

Chapter 9
MEASUREMENT OF IRRIGATION WATER

SOIL CONSERVATION SERVICE
UNITED STATES DEPARTMENT OF AGRICULTURE

The Soil Conservation Service National Engineering Handbook is intended primarily for Soil Conservation Service (SCS) engineers. Engineers working in related fields will find much of its information useful to them also.

The handbook is being published in sections, each section dealing with one of the many phases of engineering included in the soil and water conservation program. For easy handling, some of the sections are being published by chapters. Publishing of either sections or chapters will not necessarily be in numerical order.

As sections or chapters are published, they will be offered for sale by the Superintendent of Documents, Government Printing Office, Washington 25, D.C., at the price shown in the particular handbook.

Measurement of Irrigation Water Chapter 9, Section 15 (Irrigation) describes the various methods of measuring irrigation water that are commonly used on irrigated farms. Tables and charts giving rates of flow for the various structures and measuring devices are included.

Washington, D.C. February 1962
Approved for reprinting November 1973

BIBLIOGRAPHIC INFORMATION

REPORT DOCUMENTATION PAGE	1. REPORT NO. SCS/ENG/NEH-15/9	2.	3. Recipient's Accession No. PB85 182327 /AS
4. Title and Subtitle Irrigation Measurement of Irrigation Water			5. Report Date February 1962
7. Author(s)			6.
			8. Performing Organization Rept. No.
9. Performing Organization Name and Address Soil Conservation Service P.O. Box 2890 Washington DC 20013			10. Project/Task/Work Unit No.
			11. Contract(C) or Grant(G) No. (C) (G)
12. Sponsoring Organization Name and Address Engineering Division USDA/Soil Conservation Service P.O. Box 2890 Washington DC 20013			13. Type of Report & Period Covered Final
			14.

15. Supplementary Notes

16. Abstract (Limit: 200 words)

Measurement of Irrigation Water describes the various methods of measuring irrigation water that are commonly used on irrigated farms. Tables and charts giving rates of flow for various structures and measuring devices are included. It is intended for use by Soil Conservation Service engineers providing assistance to individual farms or groups of farms

17. Document Analysis a. Descriptors

Soil Conservation Service	Measuring channel flow	Current meters
Irrigation	Orifice plates	Small irrigation streams
Water measurement	Flumes	Parshall flumes
Measuring pipe flow	Weirs	

b. Identifiers/Open-Ended Terms

c. COSATI Field/Group 1-B

18. Availability Statement	19. Security Class (This Report)	21. No. of Pages
Release unlimited; available from National Technical Information Service, Springfield, VA 22151	Unclassified	79
	20. Security Class (This Page) Unclassified	22. Price

(See ANSI-Z39.18) See Instructions on Reverse OPTIONAL FORM 272 (4-77) (Formerly NTIS-35) Department of Commerce

SCS NATIONAL ENGINEERING HANDBOOK

SECTION 15 - IRRIGATION

CHAPTER 9 - MEASUREMENT OF IRRIGATION WATER

CONTENTS

FIGURES

TABLES

SCS NATIONAL ENGINEERING HANDBOOK

SECTION 15

IRRIGATION

CHAPTER 9 - MEASUREMENT OF IRRIGATION WATER

Need

Present-day knowledge of soils-moisture-plant relations permits irrigation systems to be designed for applying water in correct quantities when needed and at rates based on the soil intake rates, thereby obtaining maximum efficiency of water use and preventing land damage. Obviously, this knowledge can be used effectively only by the reasonably accurate measurement of water.

Field trials and evaluations of existing irrigation systems are often required to determine soil intake rates, required stream sizes, maximum lengths of furrow and border runs, and other factors for efficient water use. Accurate water measurement is required for making such trials and evaluations.

The rapidly increasing use of all available water, even in some humid areas, and the increased cost of development require that water be used economically and without waste. This cannot be accomplished without water measurement.

In many of the Western States, available water supplies are appropriated, and water is distributed to users according to their legal rights to its use. Water then must be measured if it is to be distributed equitably.

Units of Measurement

The units of water measurement in this chapter are those expressing a rate of flow. The two most common units are cubic feet per second (c.f.s. or sec.-ft.) and gallons per minute (g.p.m.). These may be converted one to the other and to other units as follows:

1 cubic foot per second	= 448.83 gallons per minute
1 gallon per minute	= 0.002228 cubic foot per second
1 cubic foot per second	= 0.64632 million gallons per day
1 cubic foot per second	= 1.9835 acre-feet per day
1 cubic foot per second	= 0.99173 acre-inch per hour
1 acre-inch per hour	= 452.6 gallons per minute
1 million gallons per day	= 1.5472 cubic feet per second
1 million gallons per day	= 694.4 gallons per minute
1 million gallons per day	= 3.07 acre-feet per day

The miner's inch[1] is also used in many of the Western States. It is defined as the rate of flow of water through a vertical opening 1 inch square under a head ranging from 4 to 7 inches.

Methods

Many methods of measuring the rate of flow of water resulted from numerous and varying demands for water measurement. Some of these methods require elaborate, complicated, and expensive equipment. Others are simple and inexpensive. The best method will depend on the volume of flow, the conditions under which measurements will be made, and the accuracy required. This chapter considers only those methods commonly used in irrigation practice that need inexpensive equipment and that require only moderate accuracy.

Water-measurement methods may generally be placed into one of two classifications: Velocity-area methods or direct-discharge methods. In the first, the velocity in an open channel or pipe is measured directly and the rate of flow determined by multiplying this velocity by the cross-sectional area of the channel or pipe utilized. The current meter and the velocity head rod are the only methods discussed that fall in this classification. In the second, rates of flow are measured directly, and velocity measurements are not involved. Other than the current meter and the velocity head rod, the remaining methods discussed fall into the second classification.

The methods to be discussed have been placed in three groups in the order named: (1) Methods of measuring small irrigation streams, (2) methods of measuring pipe flow, and (3) methods of measuring channel flow.

It is not the intent, in this chapter, to duplicate detailed descriptions of measurement methods and voluminous discharge tables in other handbooks and publications readily available to SCS engineers and others. It is the intent to include only a brief description of the methods used, together with their adaptability, limitations, equipment required, hydraulic formulas, measurements taken, and limited discharge tables. There are numerous methods of water measurement that are outside the scope of and are not included in this chapter. For these the reader is referred to H. W. King's Handbook of Hydraulics (McGraw-Hill Book Co.) and similar hydraulic and engineering handbooks.

---

[1] Each State defines the miner's inch as a fraction of a c.f.s. A miner's inch is defined as 1/50 or 0.020 c.f.s. in Idaho, Kans., Nebr., New Mex., N. Dak., S. Dak., Utah, and southern Calif. It is defined as 1/40 or 0.025 c.f.s. in Ariz., central Calif., Nev., Mont., and Oreg. In S. Dak., a number of old rights claim 1/40 of 1 c.f.s. equals 1 miner's inch. These claims have been upheld in court. In Colo., the miner's inch is 0.02604 c.f.s.

Methods of Measuring Small Irrigation Streams

Volumetric and Gravimetric Methods

Volumetric-flow measurements are made by measuring the time required for the flow to fill a container of known volume. Volume divided by time is then equal to rate. In the gravimetric method the same principle is used except that the volume is determined by weighing the water rather than by measuring it in a calibrated container.

The weight of the water is converted to volume (gal.) by dividing it by the weight of 1 gallon of water or 8.33 pounds. In either case, the time is measured with a stopwatch and the rate of flow determined by the formula

$$Q \text{ (g.p.m.)} = \frac{\text{Volume of water (gal.)} \times 60}{\text{Time required to fill (sec.)}}$$

These methods are simple, require little equipment, and are accurate to a high degree where used with reasonable care. They should be used to measure flows up to 20 gallons per minute but may be used for higher flows provided a container of suitable size is available and site conditions permit its use. The larger the container, the larger will be the filling time and more accurate the measurement. Since the time can be measured only to ± 0.2 second with a good stopwatch, the measured time required to fill the container will have to be 20 seconds if the rate of flow is to be determined within an accuracy of 1 percent. Similarly 10 seconds will be required for 2 percent and 4 seconds for 5 percent.

In irrigation practice, the principal use of the volumetric method is to measure the flow of water in furrows. It is also used to measure the discharge from individual outlets in a sprinkler system. The procedure for its use in measuring furrow streams appears in succeeding paragraphs.

In making volumetric measurements of furrow streams, the water should usually be run through a furrow tube or small flume, cantilevered at the downstream end for free discharge into the container. The downstream invert of the furrow tube or flume must be at least 1-1/2 inches above the maximum water surface in the furrow into which it discharges (fig. 9-1).

Furrow tubes can be set high enough to permit the use of this method for furrow-inflow measurements. Ponding above an inflow station will not affect the intake computations. However, since a ponded area above an outflow station may increase the intake rate, this method should not be used for outflow measurements on flat slopes where discharge conditions through the furrow tube will cause ponding in more than 5 percent of the study-furrow length. Large furrow tubes or open flumes sometimes can be used to reduce ponding above an outflow station.

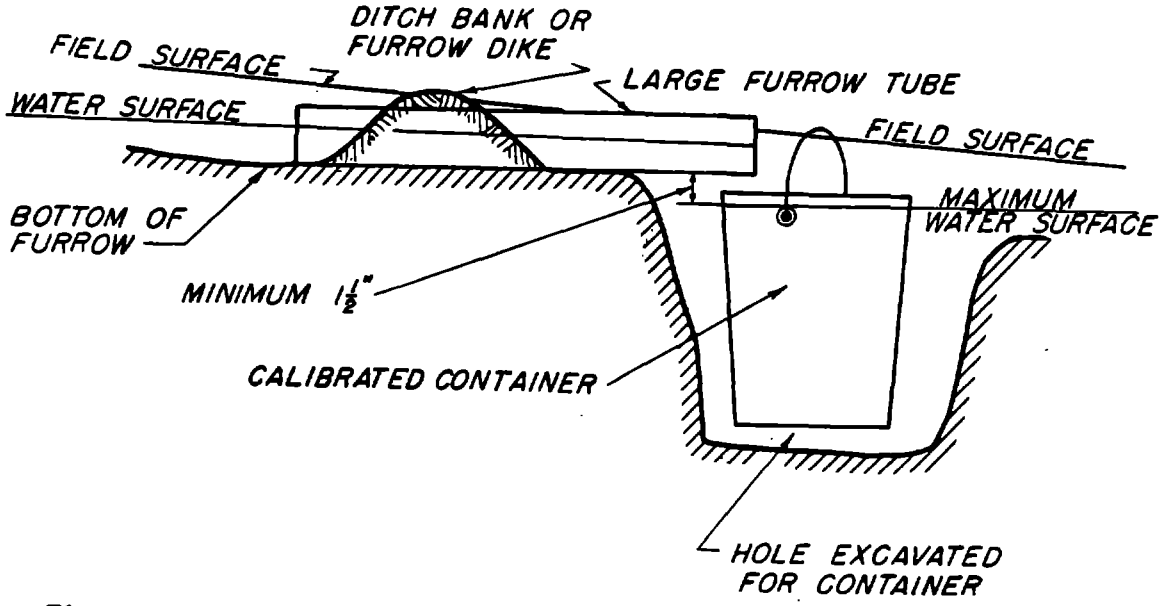

Figure 9-1--Installation for volumetric measurement of furrow flows

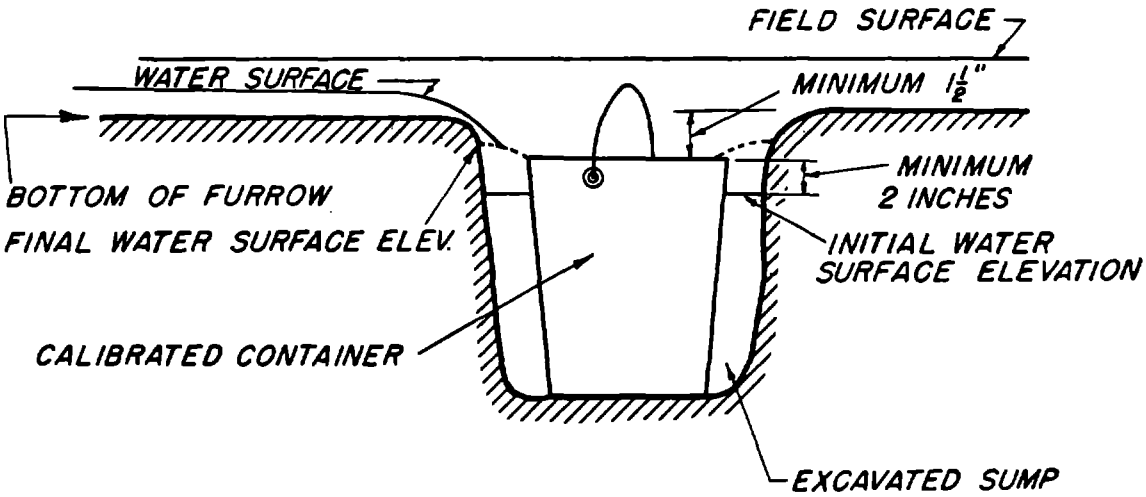

Figure 9-2--Installation for elimination of ponding in volumetric measurement of furrow flows

Where outflow measurements must be made on slopes too flat for use of the volumetric procedure, a modified procedure can sometimes be used (fig. 9-2). In this modified procedure, the flow is not discharged directly into the container. Instead, it is allowed to run into a sump and spill over the lip of the container. The sump is first bailed out until the water surface is below the lip of the calibrated container when the container is held firmly against the bottom of the sump. Then when the water surface rises to the lip of the container, the water flows into the container and the filling time can be determined with a stopwatch.

As the water surface in the sump always must rise a small distance above the top of the lip in order to cause flow into the container, an error is introduced. This error will be directly proportional to the amount the cross-sectional area of the sump exceeds the area of the top of the container and also to the height of the water surface above the lip. Therefore, the excess cross-sectional area of the sump must be kept as small as possible, and the method used only for flows that require at least 10 seconds to fill the container. For small flows (requiring 20 or more seconds to fill container) and sump areas less than three times the area of the container, the error will be negligible.

Satisfactory volumetric-flow measurements can be obtained with a wide variety of equipment. However, for general use in furrow-intake studies, the following is recommended:

1. Two furrow tubes (spiles), 3-inch diameter, 30 inches long for each furrow. Tubes used at inflow station should be equipped with slide gates for flow control.
2. Two calibrated water buckets, 3-gallon capacity. One for use at the inflow station and the other for use at the outflow station.
3. Two stopwatches that will measure the time to fill the container within 0.2 second.
4. One watch or clock to determine rates of advance and elapsed flow time to the nearest minute.
5. Standard forms for recording test data.

The method and forms are outlined in ARS 41-31, "A Method for Determining Intake Characteristics of Irrigation Furrows."

Submerged Orifice Plates

A simple method of measuring furrow streamflow is by submerged orifice plates. The plate is placed across the furrow and the head loss through the orifice is measured under submerged flow conditions.

Orifice plates consist of small sheet iron, steel, or aluminum plates that contain accurately machined circular openings or orifices usually ranging from 1 to 3-1/2 inches in diameter. Figure 9-3 shows construction details for an orifice plate with three orifices of such diameters that any flow between 8 and 65 gallons per minute can be measured within

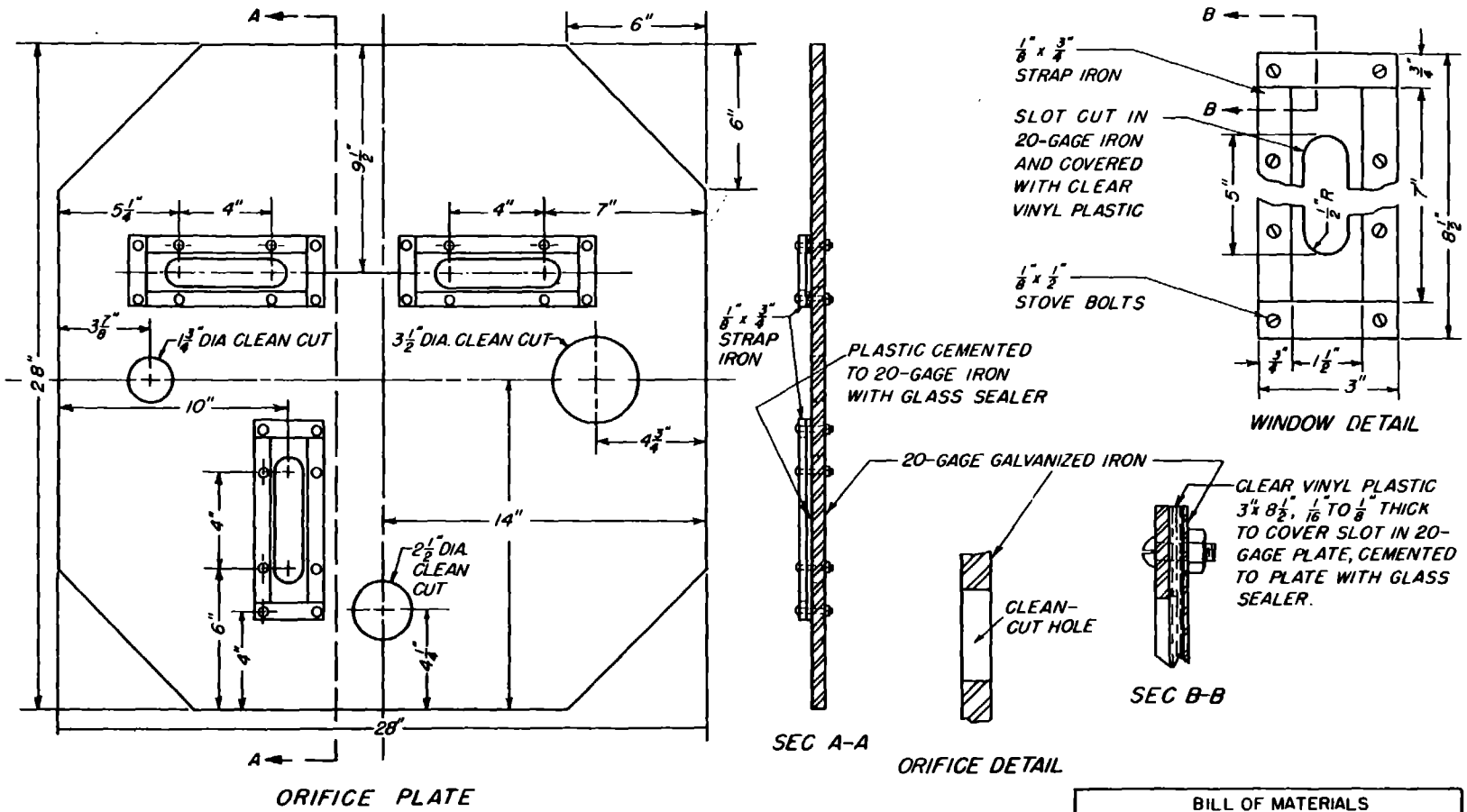

BILL OF MATERIALS	
NO.	DESCRIPTION
1	28" x 28" (20-GAGE) SHEET GALVANIZED IRON
6	⅛" x ¾" x 3" STRAP IRON
6	⅛" x ¾" x 7" STRAP IRON
3	3" x 8½" CLEAR VINYL PLASTIC 1/16" TO ⅛"
24	⅛" x ½" STOVE BOLTS

Figure 9-3--Submerged orifice plate for measuring furrow streams

a head-loss range of 0.5 to 2.5 inches. It will be noted that the plate shown contains slots covered with clear vinyl plastic to permit reading of the head differential from the downstream side of the plate.

These plates have several advantages. They are simple, inexpensive, and easy to install. Furrow streams can be measured with a minimum head differential or restriction to flow, thereby minimizing the increase in the wetted perimeter of the furrow above the measuring point and the probability of overtopping. With reasonable care in setting and reading, the margin of error in the measurements will not exceed 5 percent.

In use, an orifice size is selected so as to produce a head differential within the 0.50- to 2.5-inch range, and the plate is placed in and across the furrow with its top as nearly level as possible. Flow through the orifice must be submerged. In some cases, it may be necessary to restrict the flow downstream from the plate in order to raise the water surface on its downstream side to a level slightly above the top of the orifice. Allowing a few minutes for the head differential to become constant, this differential (the difference in the distances from the top of the plate to the water surface on the upstream and downstream sides) is measured with an engineer's scale. Readings are taken to the nearest 0.05 inch.

Flow through the orifice is calculated by the standard orifice formula,

$Q = CA\sqrt{2gh}$, which for gallons per minute can be written

$Q = 7.22\ C_d a\sqrt{h}$

where Q = discharge in gallons per minute
C_d = coefficient of discharge
h = head differential measured in inches
a = area in square inches.

Based on the results of recent calibration studies performed by the Agricultural Research Service, values of C_d in table 9-1 and the discharges in tables 9-2 and 9-3 were determined.

Table 9-1.--Average coefficients of discharge for furrow orifices

Orifice diameter (inches)	C_d free flow	C_d submerged flow
3/4	0.61	0.57
1	.62	.58
1-3/8	.64	.61
1-3/4	.63	.61
2	.62	.61
2-1/2	.61	.60
3	.60	.60
3-1/2	.60	.60
4	.60	.60

Table 9-2.--Discharge through submerged flow orifices

Head (inches)	Diameter of orifice (inches)								
	3/4	1	1 3/8	1 3/4	2	2 1/2	3	3 1/2	4
	G.p.m.	G.p.m.	G.p.m.	G.p.m.	G.p.m.	G.p.m.	G.p.m.	G.p.m.	G.p.m.
0.3	1.00	1.80	3.58	5.80	7.56	11.71	16.8	22.8	29.8
.4	1.15	2.07	4.14	6.70	8.73	13.52	19.4	26.4	34.6
.5	1.29	2.32	4.62	7.49	9.76	15.11	21.7	29.5	38.4
.6	1.41	2.55	5.07	8.20	10.69	16.55	23.7	32.3	42.2
.7	1.52	2.75	5.47	8.86	11.55	17.88	25.6	34.9	45.6
.8	1.63	2.94	5.85	9.47	12.34	19.11	27.4	37.2	48.6
.9	1.73	3.12	6.20	10.05	13.09	20.3	29.1	39.6	51.6
1.0	1.82	3.29	6.54	10.60	13.80	21.4	30.6	41.7	54.5
1.1	1.91	3.45	6.86	11.11	14.48	22.4	32.1	43.7	57.1
1.2	2.00	3.60	7.16	11.60	15.12	23.4	33.6	45.6	59.6
1.3	2.08	3.75	7.46	12.08	15.74	24.3	34.9	47.5	62.0
1.4	2.16	3.89	7.74	12.53	16.33	25.2	36.2	49.2	64.3
1.5	2.23	4.03	8.01	12.97	16.90	26.2	37.5	51.1	66.7
1.6	2.30	4.16	8.27	13.40	17.45	27.0	38.7	52.7	68.8
1.7	2.37	4.29	8.53	13.81	17.99	27.8	39.9	54.3	70.9
1.8	2.44	4.41	8.77	14.21	18.52	28.6	41.1	55.9	72.9
1.9	2.51	4.53	9.02	14.60	19.02	29.4	42.2	57.5	75.0
2.0	2.58	4.65	9.25	14.98	19.52	30.2	43.3	59.0	76.9
2.1	2.64	4.76	9.48	15.35	20.0	30.9	44.4	60.5	78.8
2.2	2.70	4.88	9.70	15.71	20.4	31.7	45.4	61.9	80.7
2.3	2.76	4.99	9.92	16.06	20.9	32.3	46.4	63.3	82.5
2.4	2.82	5.09	10.13	16.41	21.3	33.0	47.4	64.6	84.3
2.5	2.88	5.20	10.34	16.74	21.8	33.6	48.4	65.9	86.0
2.6	2.94	5.30	10.55	17.08	22.2	34.3	49.4	67.2	87.6
2.7	3.00	5.40	10.75	17.40	22.7	35.0	50.3	68.5	89.3
2.8	3.05	5.50	10.94	17.72	23.1	35.7	51.2	69.8	91.0
2.9	3.10	5.60	11.14	18.03	23.5	36.3	52.1	71.0	92.6
3.0	3.15	5.69	11.33	18.34	23.9	37.0	53.0	72.2	94.2
3.1	3.20	5.79	11.52	18.65	24.3	37.6	53.9	73.4	95.7
3.2	3.25	5.88	11.70	18.94	24.7	38.2	54.8	74.6	97.2
3.3	3.30	5.97	11.88	19.24	25.1	38.7	55.6	75.7	98.7
3.4	3.35	6.06	12.06	19.53	25.4	39.3	56.5	76.8	100.1
3.5	3.40	6.15	12.24	19.81	25.8	39.9	57.3	77.8	101.6
3.6	3.45	6.24	12.41	20.1	26.2	40.5	58.1	78.9	103.1
3.7	3.50	6.32	12.58	20.3	26.5	41.1	58.9	80.0	104.6
3.8	3.54	6.41	12.75	20.6	26.9	41.6	59.7	81.1	106.0
3.9	3.59	6.49	12.92	20.9	27.3	42.2	60.5	82.2	107.4
4.0	3.64	6.57	13.08	21.1	27.6	42.7	61.3	83.2	108.7
4.1			13.24	21.4	27.9	43.2	62.0	84.2	110.0
4.2			13.40	21.7	28.3	43.7	62.8	85.3	111.4
4.3			13.56	21.9	28.6	44.2	63.5	86.3	112.7
4.4			13.72	22.2	28.9	44.7	64.2	87.3	114.0
4.5			13.87	22.4	29.3	45.2	65.0	88.3	115.3
4.6			14.03	22.7	29.6	45.7	65.7	89.3	116.6
4.7			14.18	22.9	29.9	46.2	66.4	90.2	117.9
4.8			14.33	23.1	30.2	46.7	67.1	91.1	119.2
4.9			14.48	23.4	30.5	47.2	67.8	92.1	120.4
5.0			14.62	23.6	30.8	47.7	68.5	93.1	121.5

Table 9-3.--Discharge through free flow orifices

Head (inches)	Diameter of orifice (inches)									
	3/4	1	1 3/8	1 1/2	1 3/4	2	2 1/2	3	3 1/2	4
	G.p.m.	G.p.m.	G.p.m.	G.p.m.	G.p.m.	G.p.m.	G.p.m.	G.p.m.	G.p.m.	G.p.m.
0.4	1.24									
.5	1.39	2.49								
.6	1.52	2.73								
.7	1.64	2.94	5.71							
.8	1.75	3.15	6.11	7.19						
.9	1.86	3.34	6.48	7.63	10.34					
1.0	1.96	3.52	6.83	8.04	10.90					
1.1	2.06	3.69	7.16	8.43	11.43	14.8				
1.2	2.15	3.86	7.48	8.80	11.94	15.5				
1.3	2.23	4.01	7.78	9.17	12.43	16.1	24.8			
1.4	2.32	4.16	8.08	9.51	12.90	16.7	25.8			
1.5	2.40	4.31	8.36	9.84	13.35	17.3	26.7			
1.6	2.48	4.45	8.63	10.17	13.79	17.9	27.5	38.7		
1.7	2.55	4.59	8.90	10.48	14.21	18.4	28.4	39.9		
1.8	2.63	4.72	9.16	10.78	14.62	19.0	29.2	41.1		
1.9	2.70	4.85	9.41	11.08	15.03	19.5	30.0	42.2	57.5	
2.0	2.77	4.98	9.66	11.37	15.42	20.0	30.8	43.3	59.0	
2.1	2.84	5.10	9.89	11.65	15.80	20.5	31.5	44.4	60.5	
2.2	2.91	5.22	10.13	11.92	16.17	21.0	32.3	45.4	61.9	
2.3	2.97	5.34	10.35	12.19	16.53	21.4	33.0	46.4	63.3	82.5
2.4	3.04	5.45	10.54	12.45	16.89	21.9	33.7	47.4	64.6	84.3
2.5	3.10	5.57	10.79	12.71	17.23	22.3	34.4	48.4	65.9	86.0
2.6	3.16	5.68	11.01	12.96	17.58	22.8	35.1	49.4	67.2	87.6
2.7	3.22	5.79	11.22	13.21	17.91	23.2	35.8	50.3	68.5	89.3
2.8	3.28	5.89	11.42	13.45	18.24	23.7	36.4	51.2	69.8	91.0
2.9	3.34	5.99	11.63	13.69	18.56	24.1	37.1	52.1	71.0	92.6
3.0	3.40	6.09	11.82	13.92	18.88	24.5	37.7	53.0	72.2	94.2
3.1	3.45	6.19	12.02	14.15	19.19	24.9	38.3	53.9	73.4	95.7
3.2	3.50	6.29	12.21	14.38	19.50	25.3	38.9	54.8	74.6	97.2
3.3	3.56	6.39	12.40	14.60	19.88	25.7	39.5	55.6	75.7	98.7
3.4	3.61	6.49	12.59	14.82	20.17	26.1	40.1	56.5	76.8	100.1
3.5	3.67	6.59	12.77	15.04	20.47	26.4	40.7	57.3	77.8	101.6
3.6	3.72	6.68	12.95	15.25	20.75	26.8	41.3	58.1	78.9	103.1
3.7	3.77	6.77	13.13	15.46	21.04	27.2	41.9	58.9	80.0	104.6
3.8	3.82	6.86	13.31	15.67	21.33	27.6	42.4	59.7	81.1	106.0
3.9	3.87	6.95	13.48	15.87	21.61	27.9	43.0	60.5	82.2	107.4
4.0	3.92	7.04	13.65	16.08	21.88	28.3	43.5	61.3	83.2	108.7
4.1			13.82	16.28	22.15	28.6	44.1	62.0	84.2	110.0
4.2			13.99	16.47	22.42	29.0	44.6	62.8	85.3	111.4
4.3			14.16	16.67	22.69	29.3	45.1	63.5	86.3	112.7
4.4			14.32	16.86	22.95	29.7	45.6	64.2	87.3	114.0
4.5			14.48	17.05	23.21	30.0	46.2	65.0	88.3	115.3
4.6			14.64	17.24	23.47	30.3	46.7	65.7	89.3	116.6
4.7			14.80	17.43	23.72	30.7	47.2	66.4	90.2	117.9
4.8			14.96	17.61	23.97	31.0	47.7	67.1	91.1	119.2
4.9			15.11	17.79	24.22	31.3	48.2	67.8	92.1	120.4

WSC Flumes

The WSC measuring flume is in three sizes, which collectively range from 1 to 1,200 gallons per minute. Only the smallest of the three, ranging from 1 to 26 gallons per minute, is presented in this chapter. This is the size normally adaptable to the measurement of furrow streams (fig. 9-4).

For larger flumes, the reader is referred to the Washington State College, Washington Agricultural Experiment Station, Station Circular 200, "Measuring Water in Small Channels with the WSC Flume," September 1952.

The WSC measuring flume, developed at the Washington State College, adapts the Venturi principle to the measurement of flow in small channels. This flume consists of four principle sections: An entrance section upstream, a converging or contracting section leading to a constricted section or throat, and a diverging or expanding section downstream (fig. 9-4). The bottom of the flume is placed level, both longitudinally and transversely, at a height equal to or slightly higher than the channel bottom. Only one reading on the slanting scale is required. This reading is readily converted to gallons per minute by the use of tables.

The WSC measuring flume has several advantages: Simplicity of construction, low cost, ease of installation, and very low head losses. It is usually made of sheet metal with its component parts arc-welded together, although the flume can be constructed of wood, concrete, or other materials.

The flume is said to be "operating" when the depth of flow at its downstream end is equal to or less than the depth (D_{op}) shown in figure 9-5. If the water surface is at a common level throughout the length of the flume, the flume is said to be "drowned out" and cannot be used in this position. In such cases, the flume is raised slightly until the flow characteristics shown in figure 9-5 are obtained.

After the slanting scale in the entrance section has been read, table 9-4 is used to convert the scale reading to flow in gallons per minute.

Siphon Tubes

Siphon tubes, used to remove water from a head ditch and distribute it over a field through furrows, corrugations, or borders, are also used to measure the rate of flow into these distribution systems.

These tubes, made of aluminum, plastic, or rubber, are usually preformed to fit a half cross section of the head ditch. The normal diameter range is from 1 to 6 inches, although both smaller and larger sizes are available. The smaller sizes are used with furrows and corrugations and the larger sizes with borders. Various lengths are available.

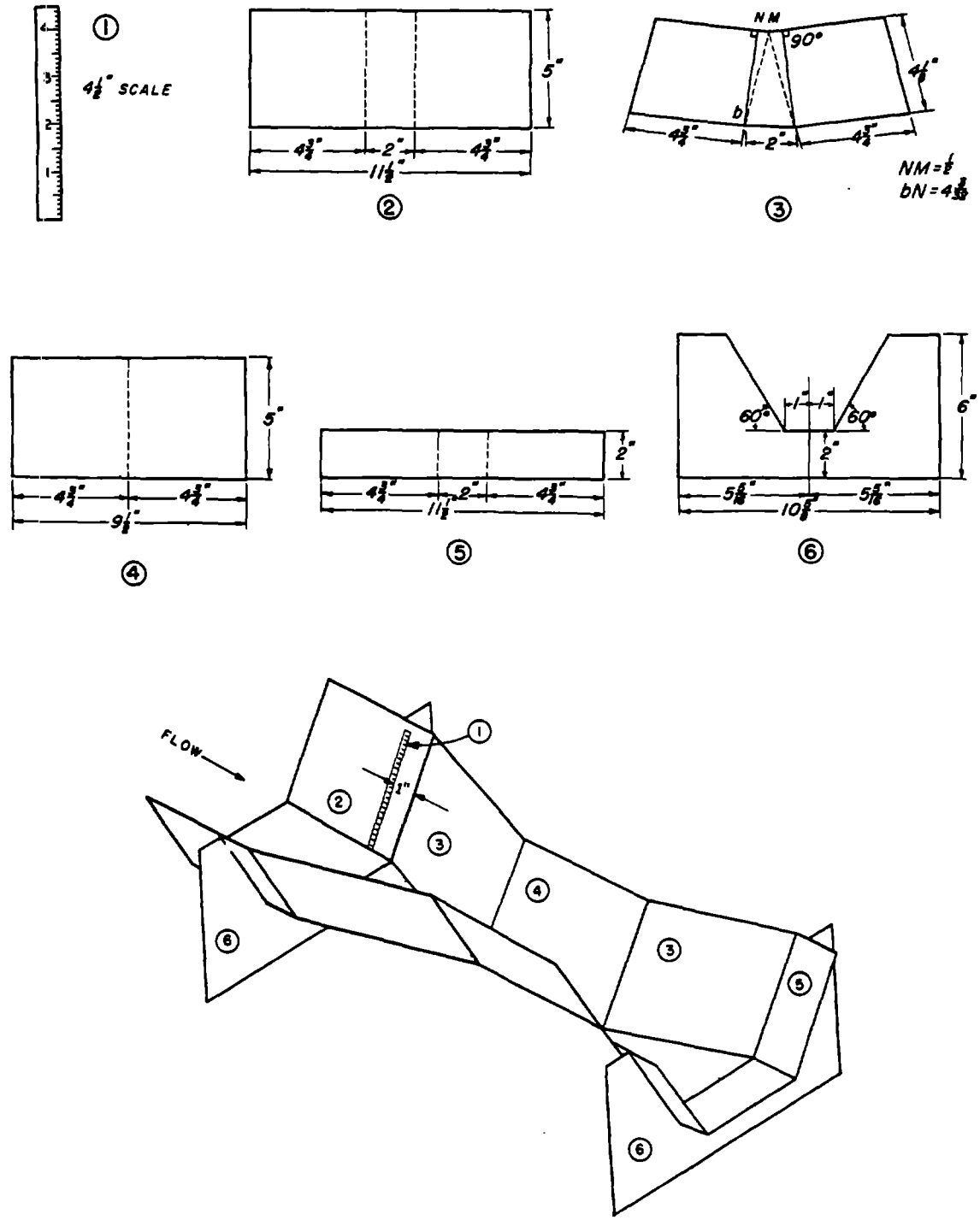

Figure 9-4--Component parts of the small WSC flume showing their relative positions

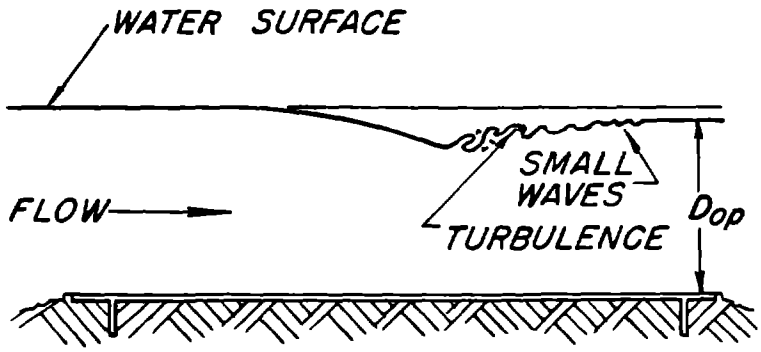

Figure 9-5--Flow characteristics of the WSC flume in operation

Table 9-4.--Discharge for small WSC flume

Scale reading (inches)	0	.1	.2	.3	.4	.5	.6	.7	.8	.9
	G.p.m.	G.p.m.	G.p.m.	G.p.m.	G.p.m.	G.p.m.	G.p.m.	G.p.m.	G.p.m.	G.p.m.
1			1.5	1.8	2.2	2.6	3.0	3.5	4.1	4.7
2	5.3	6.1	6.9	7.7	8.6	9.5	10.4	11.5	12.7	13.8
3	15.0	16.4	17.8	19.3	20.8	22.4	24.0	25.8		

Siphon tubes have several advantages. They are portable. For this reason, the reduced number of tubes required to irrigate a given area results in low initial cost for equipment. Flow into individual furrows or borders can be controlled effectively by using the number of tubes that will divide the total head ditch flow into individual streams of the desired size.

The tubes are limited to fields with little cross slope in order to maintain a near-constant operating head on each tube. A disadvantage is that they need to be primed individually. This priming is the principal labor requirement when siphon tubes are used for surface irrigation.

The discharge of a siphon tube depends on: (1) The diameter of the tube, (2) the length of the tube, (3) the roughness of the inside surface and the number and degree of bends in the tube, and (4) the head under which the tube is operating. When the outlet end of the tube is submerged, the operating head is the difference in elevation between the water surfaces measured at the entrance and outlet ends of the tube. When the tube is flowing free, the operating head is the difference in elevation between the water surface at the entrance of the tube and the center of the outlet end.

Siphon-tube discharge may be computed by the formula

$$Q = CA\sqrt{2gh}$$

where Q = discharge in cubic feet per second
C = discharge coefficient for the tube
A = cross-sectional area of the tube in square feet
g = acceleration due to gravity = 32.2 feet per second per second
h = operating head in feet.

The coefficient (C) may be computed by the formula

$$C = C_o\sqrt{\frac{d^{4/3}}{5{,}087\ n^2\ C_o^2\ L + d^{4/3}}}$$

where C_o = discharge coefficient for the tube entrance (about 0.83)
d = inside diameter of the tube in inches
n = roughness coefficient
L = length of the tube in feet.

As an example, the discharge from a 3-inch aluminum siphon tube 7 1/2 feet long, operating under a head of 0.50 foot, is computed as follows:

C_o = 0.83
d for 3-inch OD tubing = 2.900 inches
n = 0.008
L = 7.5 feet
h = 0.50 foot

$$C = 0.83\sqrt{\frac{2.900^{4/3}}{5{,}087 \times 0.008^2 \times 0.83^2 \times 7.5 + 2.900^{4/3}}} = 0.700$$

$$A = \frac{3.1416 \times 2.900^2}{144 \times 4} = 0.04587 \text{ square feet}$$

$$Q = 0.700 \times 0.04587\ \sqrt{2 \times 32.2 \times 0.50} = 0.18217 \text{ cubic feet per second}$$

$$Q = 0.18217 \times 448.8 = 81.8 \text{ gallons per minute}$$

This procedure was used to compute the discharge values used in the preparation of figure 9-6 showing the discharge of aluminum siphon tubes operating at various heads. Values of the roughness coefficient (n) were 0.008 for sizes up to and including 3 inches and 0.012 for sizes 4 inches and larger.

Charts similar to figure 9-6 can be prepared for siphon tubes made of other materials when appropriate values of C_o and n are established by rating the tubes in a laboratory.

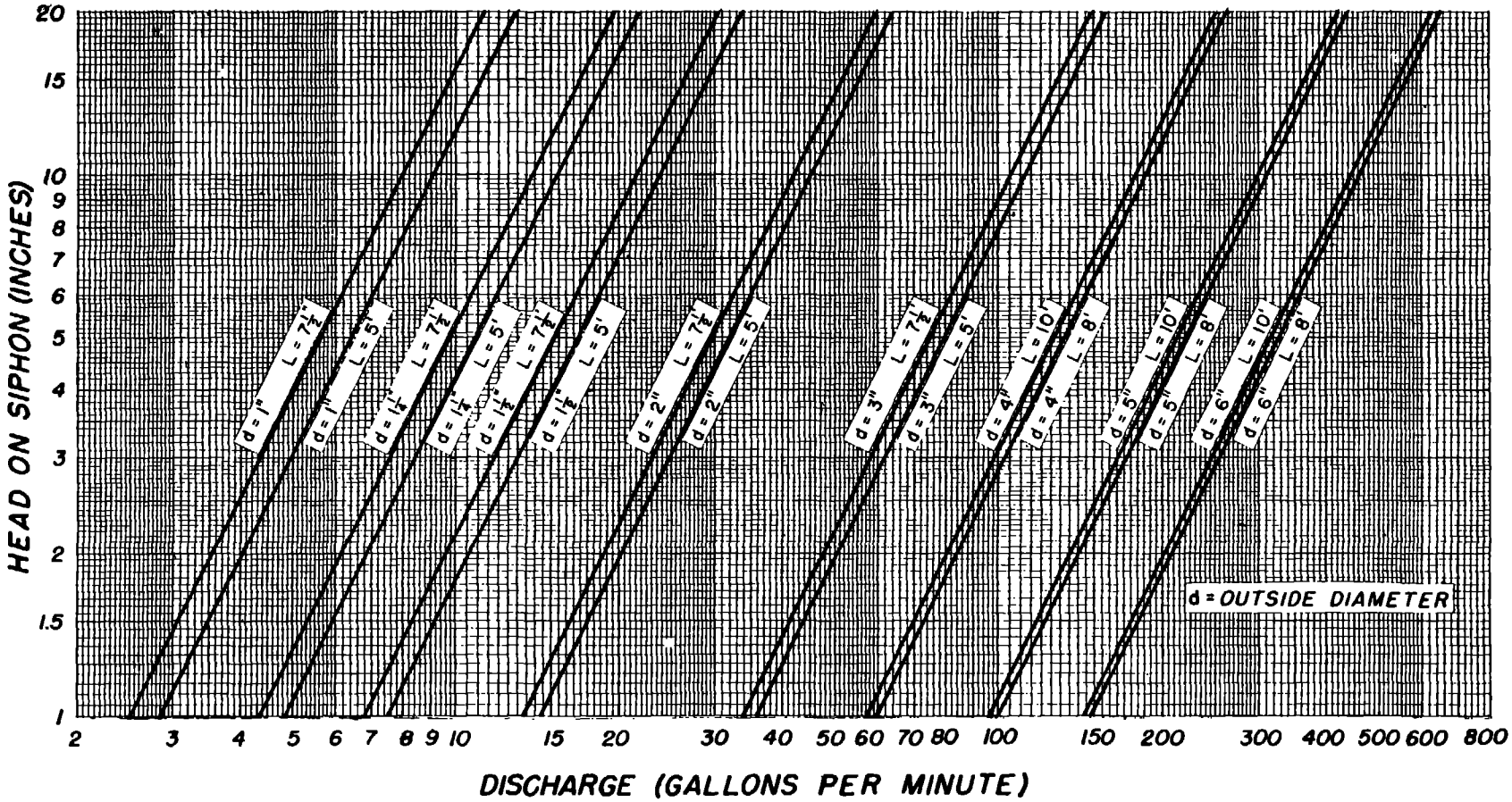

Figure 9-6--Chart showing discharge of aluminum siphon tubes at various heads (L= length of tube)

Methods of Measuring Pipe Flow

Pipe Orifices

Pipe orifices are usually circular orifices placed within or at the end of a horizontal pipe. The head on the orifice is measured with a manometer.

Where the orifice is placed in the pipe, the discharge will not be free, and the head must ~~be~~ measured at points both upstream and downstream from the orifice. For a further discussion of this type of orifice, the reader is referred to King's Handbook of Hydraulics.

The pipe orifice more commonly used in measuring irrigation water and the discharge from wells within a range of 50 to 2,000 gallons per minute has the circular orifice located at the end of the pipe (fig. 9-7). The pipe must be level and the manometer, a glass tube, is placed about 24 inches upstream from the orifice. No elbows, valves, or other fittings should be closer than 4 feet upstream from the manometer. The ratio of the orifice diameter to the pipe diameter should be no less than 0.50 nor greater than 0.83. The ratio to be selected, however, must cause the pipe to flow full. The head is measured with an ordinary carpenter's rule.

Discharge through the orifice is computed by use of the formula

$$Q = Ca\sqrt{2gh}$$

where Q = orifice discharge in gallons per minute
C = coefficient which varies with the ratio of the orifice diameter to the pipe diameter as well as with all the other factors affecting flow in orifices. The value of the coefficient (C) may be taken from figure 9-8.
a = cross-sectional area of the orifice in square inches
g = acceleration due to gravity = 32.2 feet per second per second
h = head on the orifice in inches measured above its center.

For example, find the discharge from a 5-inch orifice at the end of an 8-inch pipe operating under a head of 25 inches.

Ratio of orifice diameter to pipe diameter = 5/8 = 0.625

C from figure 9-8 = 0.63
a = 19.63 square inches

$$Q = Ca\sqrt{2gh}$$
$$= 0.63 \times 19.63 \times \sqrt{2 \times 32.2 \times 25}$$
$$= 496 \text{ gallons per minute}$$

Table 9-5 gives discharge values from various combinations of pipe sizes and orifice sizes for heads up to 70 inches.

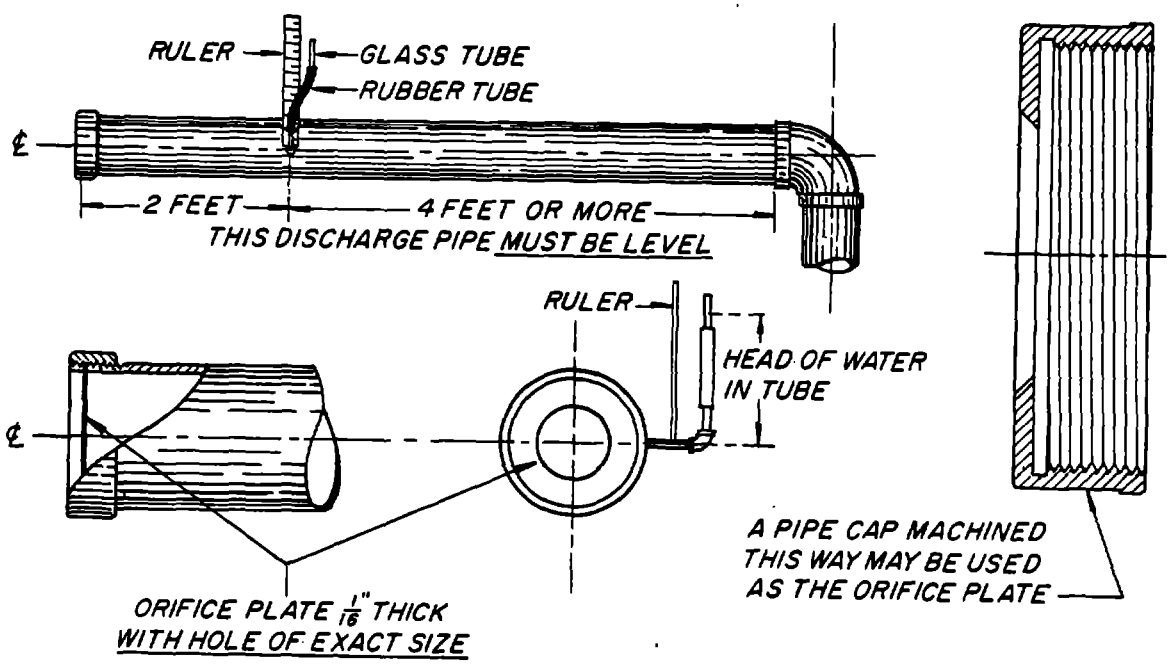

Figure 9-7--Details of a circular pipe orifice located at the discharge end of the pipe

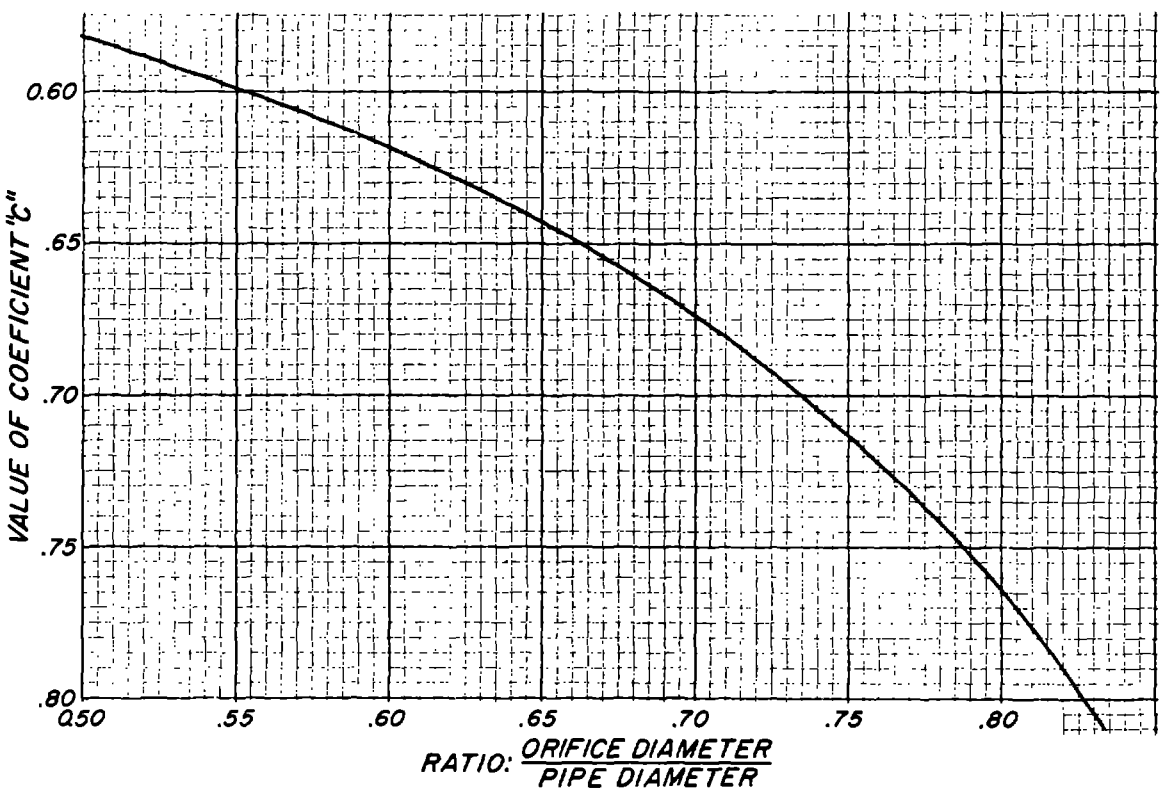

Figure 9-8--Values of the coefficient C for measuring flow from circular pipe orifices based on $Q = CA\sqrt{2gh}$

TABLE 9-5.--Discharge from circular pipe orifices with free discharge[1]

Head (inches)	3-in. orifice		4-in. orifice		5-in. orifice		6-in. orifice		7-in. orifice	8-in. orifice
	4-in. Pipe	6-in. Pipe	6-in. Pipe	8-in. Pipe	6-in. Pipe	8-in. Pipe	8-in. Pipe	10-in. Pipe	10-in. Pipe	10-in. Pipe
	G.p.m.	G.p.m.	G.p.m.	G.p.m.	G.p.m.	G.p.m.	G.p.m.	G.p.m.	G.p.m.	G.p.m.
6	108	82	160	150	305	240	408	345		
8	122	94	185	170	350	280	458	395	600	935
10	133	104	205	190	393	316	508	445	666	1040
12	146	114	225	208	430	346	556	490	728	1120
14	157	123	243	224	465	376	599	530	785	1194
16	167	132	257	238	495	402	636	568	838	1266
18	178	140	271	252	524	426	672	604	887	1336
20	187	148	285	266	548	449	708	636	933	1404
22	197	156	299	279	572	470	744	664	979	1471
24	205	164	310	291	596	488	776	692	1022	1529
26	214	171	323	303	620	504	805	720	1064	1585
28	222	177	335	314	644	520	831	747	1104	1641
30	230	183	346	325	668	536	857	773	1143	1697
32	239	189	357	335	692	552	882	799	1181	1753
34	246	195	369	345	715	568	907	824	1218	1809
36	254	200	380	354	737	584	931	847	1251	1865
38	260	205	390	363	759	600	955	867	1281	
40	266	210	401	371	781	616	979	887	1311	
42	272	214	411	380	800	631	1001	906	1341	
44	278	219	420	388	820	645	1023	925	1371	
46	284	224	429	396	837	659	1045	944	1401	
48	290	229	440	405	855	672	1067	963	1431	
50	296	234	448	413	872	686	1089	982	1461	
52	302	238	457	421	888	700	1110	1000	1491	
54	307	243	465	429	904	714	1130	1018	1520	
56	313	248	472	437	919	727	1150	1036	1548	
58	317	252	480	445	934	739	1170	1052	1574	
60	323	257	489	453	948	751	1190	1068	1598	
62	328	262	496	461	961	763	1209	1084		
64	333	266	504	469	974	775	1227	1099		
66	338	271	513	475	988	787	1245	1113		
68	343	275	520	483	1002	799	1263	1127		
70	349	280	525	491	1016	811	1280	1140		

[1] From "Layne Well Water Systems," Layne and Bowler, Inc., Memphis Tenn., 1951.

Venturi Meters

The Venturi meter measures the flow of water in pipes under pressure. It utilizes the Venturi principle in that the flow passing through a constricted section of pipe is accelerated and its pressure head is lowered. The cross-sectional areas of the pipe and the constricted section being known, the flow is determined by measuring the drop in pressure head.

A cross section of a Venturi meter showing its component parts is shown in figure 9-9. The meter is usually inserted between two flanges in a pipeline. At the upstream end the short, straight, cylindrical part of the meter has the same inside diameter as the pipeline and has a side hole drilled through the wall where a piezometer tube is connected for measuring the static pressure. Following this straight section, a conical entrance section leads to the short constricted section or cylindrical throat. This entrance cone has an angle of about 21°. The cylindrical

throat section is also provided with a side hole for attaching a piezometer tube. The diameter of the throat is one-fourth to one-half the diameter of the pipeline. A conical exit section with an angle of 5° to 7° follows the throat section and ends at a flange in the pipeline. This long exit cone decelerates the flow as smoothly as possible and restores normal pressure in the line. A piezometer tube is sometimes connected in the line immediately below the exit section to measure the overall loss of head through the meter; however, this measurement is not used in computing the rate of flow through the meter. A loss of head through the meter of 10 to 20 percent may be expected.

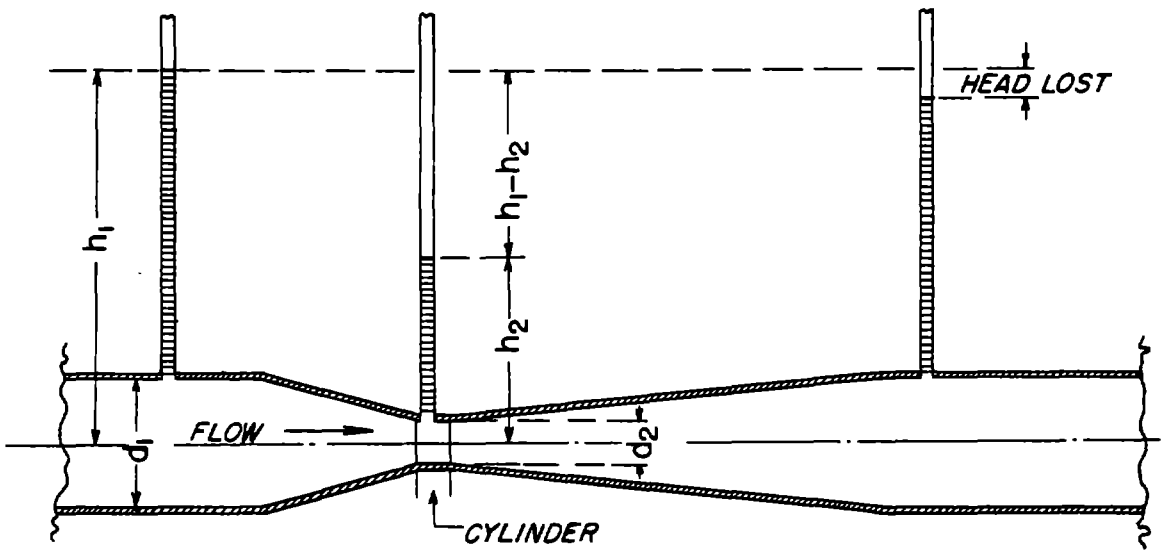

Figure 9-9--Diagram of a Venturi tube

The rate of flow through the meter is computed from the formula

$$Q = CKd_2^2 \sqrt{h_1 - h_2}$$

where Q = rate of flow in cubic feet per second
C = empirical discharge coefficient that may be taken from table 9-6
d_1 = diameter of the entrance section in feet
d_2 = diameter of the throat section in feet
h_1 = pressure head in feet measured above the axis of the meter at the straight entrance section.
h_2 = pressure head in feet measured above the axis of the meter at the throat.

K = factor corresponding to the ratio of the throat diameter to diameter of the entrance section.

$$K = \frac{\pi}{4}\sqrt{\frac{2g}{1 - \left(\frac{d_2}{d_1}\right)^4}}$$

Values of K may be taken from table 9-7.

Table 9-6.--Coefficients of discharge (C) for Venturi meters

Diameter of throat (inches)	Throat velocity (feet per second)								
	3	4	5	10	15	20	30	40	50
1	.935	.945	.949	.958	.963	.966	.969	.970	.972
2	.939	.948	.953	.965	.970	.973	.974	.975	.977
4	.943	.952	.957	.970	.975	.977	.978	.979	.980
8	.948	.957	.962	.974	.978	.980	.981	.982	.983
12	.955	.962	.967	.978	.981	.982	.983	.984	.985
18	.963	.969	.973	.981	.983	.984	.985	.986	.986
48	.970	.977	.980	.984	.985	.986	.987	.988	.988

Table 9-7.--Values of K in formula for Venturi meters

$\frac{d_2}{d_1}$	K	$\frac{d_2}{d_1}$	K	$\frac{d_2}{d_1}$	K	$\frac{d_2}{d_1}$	K	$\frac{d_2}{d_1}$	K
.20	6.31	.33	6.34	.46	6.45	.59	6.72	.72	7.37
.21	6.31	.34	6.34	.47	6.46	.60	6.75	.73	7.45
.22	6.31	.35	6.35	.48	6.47	.61	6.79	.74	7.53
.23	6.31	.36	6.35	.49	6.49	.62	6.82	.75	7.62
.24	6.31	.37	6.36	.50	6.51	.63	6.86	.76	7.72
.25	6.31	.38	6.37	.51	6.52	.64	6.91	.77	7.82
.26	6.31	.39	6.37	.52	6.54	.65	6.95	.78	7.94
.27	6.32	.40	6.38	.53	6.56	.66	7.00	.79	8.06
.28	6.32	.41	6.39	.54	6.59	.67	7.05	.80	8.20
.29	6.32	.42	6.40	.55	6.61	.68	7.11	.81	8.35
.30	6.33	.43	6.41	.56	6.64	.69	7.17	.82	8.51
.31	6.33	.44	6.42	.57	6.66	.70	7.23	.83	8.69
.32	6.33	.45	6.43	.58	6.69	.71	7.30	.84	8.89

As an example of the use of this formula, assume a 24-inch pipe diameter, an 8-inch throat diameter, and a drop in pressure head between the entrance and the throat ($h_1 - h_2$) of 9.3 feet.

The ratio of the throat diameter (d_2) to the entrance diameter (d_1) = 8/24 = 0.33. Using this ratio in table 9-7, find the value of K to be 6.34.

Then

$$Q = CKd_2^2 \sqrt{h_1 - h_2}$$
$$= C \times 6.34 \times 0.667^2 \times \sqrt{9.30}$$
$$= C \times 8.603 \text{ cubic feet per second}$$

Since the value of C will be near unity, the approximate velocity through the throat may be computed as follows:

$$V = \frac{Q}{A} = \frac{8.603}{\pi \times 0.333^2} = 24.6 \text{ feet per second}$$

Using this velocity, the value of C from table 9-6 is 0.9805. Thus Q = 0.9805 x 8.603 = 8.435 cubic feet per second.

Manufacturers of commercial Venturi meters should be requested to furnish discharge tables or charts for all meters purchased.

Irrigation Meters

Meters most commonly used to measure irrigation water are of the velocity type and are installed in canals, flumes, or streams or contained within pipes or conduits up to 6 feet in diameter. When the meters are installed in open channels, the flow must be brought through a pipe or conduit of known cross-sectional area. This pipe or conduit is called a meter tube. The meter is placed within the discharge end of this tube.

Irrigation meters essentially consist of a conical propeller connected to a registering head by a gear train. They are operated by the kinetic energy of the flowing water. The propeller is suspended, facing the center of flow, in the pipe, tube, or conduit and is rotated by the flow of water. The speed of the propeller (r.p.m.) is proportional to the average velocity of flow within the tube (ft./sec.), and since the cross-sectional area of the tube is known and remains constant, the propeller speed is proportional to the rate of flow.

The rotating propeller actuates the registering head through the gear train. This head registers total flow on a counter-type clock. The total flow is recorded directly in standard volumetric units such as gallons, cubic feet, acre-feet, miner's inch-days, or others.

There are two basic requirements for accurate operations of the meter: (1) The tube must flow full at all times, and (2) the rate of flow must

exceed the minimum for the rated range. Meters are given a volumetric calibration test at the factory, and adjustment or recalibration in the field is not normally required.

Irrigation meters of the types described have a number of advantages over other methods of water measurement. Registration is independent of variations in the line pressure or in the rate of flow within the rated range, thus eliminating frequent readings and checks. Since the meters total flow directly, no time-consuming computations are involved, and human errors are eliminated. Automatic totalizer-recording devices are available which may be used with continuous charts and provide permanent records of water use. The principal disadvantages of these meters are their susceptibility to clogging with moss and to vandalism when installed permanently.

Three basic types of irrigation meters are discussed in succeeding paragraphs. These are (1) low-pressure line meters, (2) open-flow meters, and (3) vertical-flow or hydrant-type meters.

Meter valves combine into a single compact unit the functions of irrigation hydrants with those of the vertical flow-meters.

Low-pressure-line meters.--These are used wherever pipelines are used to distribute irrigation water. They may be installed in new or existing concrete, steel, or asbestos-cement pipelines within a range of diameters of 4 to 72 inches. Portable sections of steel pipe with meter installed are available, thus permitting the measurement of water at several locations with one meter. The principal use for low-pressure-line meters is the metering of water delivered to individual farms from lateral lines of an irrigation enterprise. In the smaller sizes, these meters can be used effectively on an individual farm to measure accurately the amount of water applied to a given area, thereby permitting increased efficiency of water use. Figure 9-10 shows a low-pressure-line meter installed in a section of steel pipe. Note the straightening vanes installed ahead of the propeller to eliminate turbulence.

Open-flow meters.--These are similar to the low-pressure-line meters in construction and are used to meter the flow in open channels or gravity-flow, closed-conduit systems. The meter is suspended from a wall or simple support structure into the center of a full-flowing submerged discharge end of a pipe, culvert, or siphon, which serves as the meter tube. The metered section may be round or rectangular. Concrete pipe, corrugated metal pipe, or even long wooden-box structures are satisfactory as meter tubes. Open-flow meters may be installed permanently or may be moved from one location to another without interrupting the normal flow of water.

The principal use of the smaller-size meters up to about 42 inches in diameter is to meter the flow at farm turnouts (fig. 9-11). The larger sizes are used to meter large volume flow from reservoirs and in main canals and large lateral ditches.

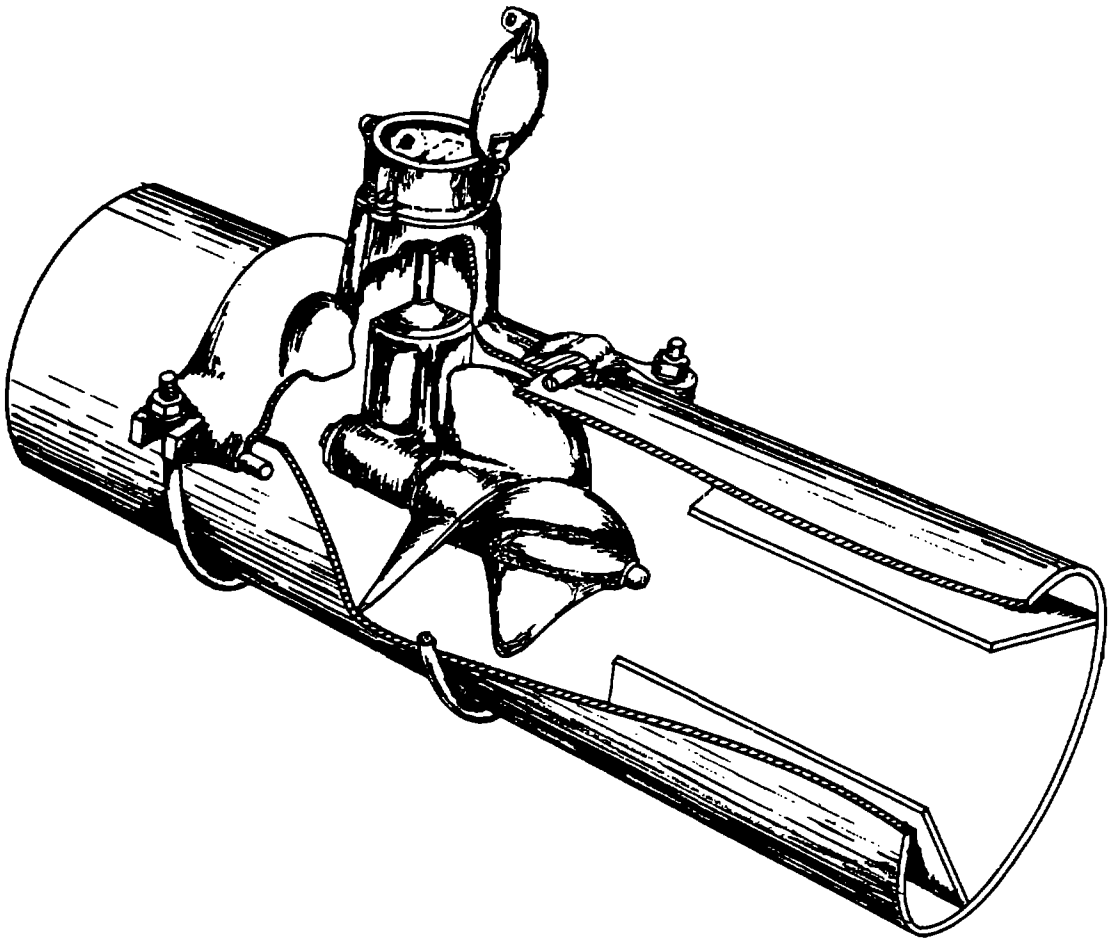

Figure 9-10--A low-pressure line meter installed in a section of steel pipe

Vertical-flow meters.--These are used to meter the flow of water in vertical pipes (fig. 9-12). Their operating principles are identical with those of the other two types of meters, the only difference being the position of the propeller, which is vertical. Water flows unrestricted in an upward direction through the meter tube, actuates the propeller, and is then deflected downward by a bonnet or cover to the outside of the tube. The bonnet is designed to provide adequate area for the maximum discharge and to prevent tampering with the propeller.

The principal use for vertical flow meters is the metering of individual farm deliveries where such deliveries are made in gravity flow pipelines and through pipe turnouts.

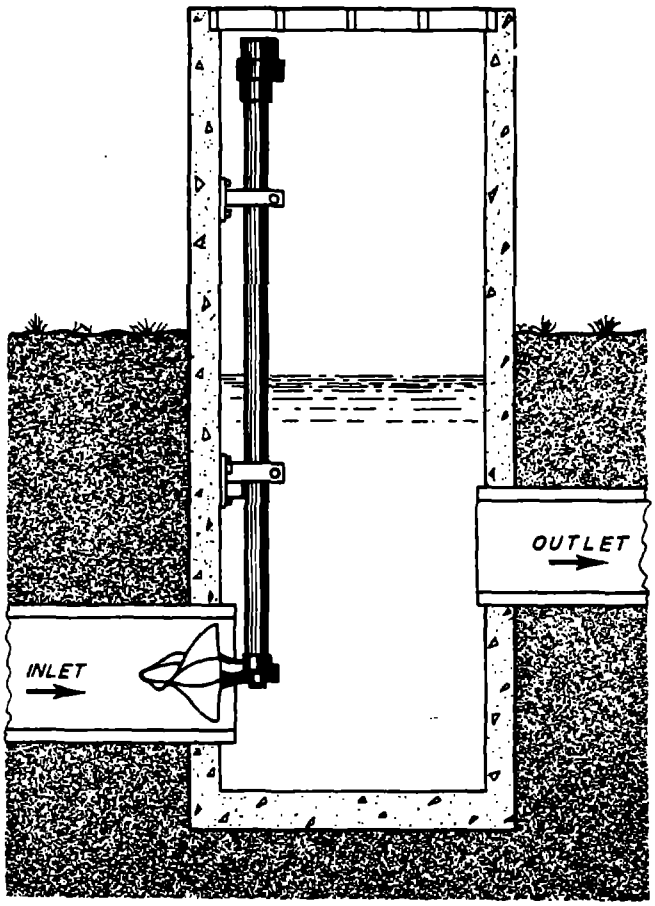

Figure 9-11--An open-flow meter installation

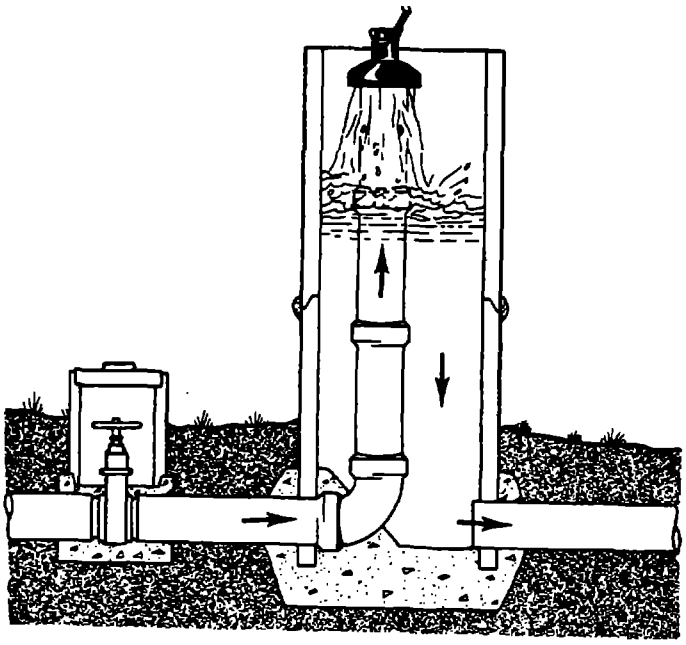

Figure 9-12--Typical vertical-flow meter installation

Meter valves.--Provision is made in these valves for total flow registration at all rates of flow above the minimum rate of flow and for flow control from full capacity to complete shutoff. The rate of flow can be accurately set to that desired by rotating the meter-head assembly. Meter valves are portable and can thus be used on any number of hydrants or pipe turnouts of like diameter up to 12 inches. They may be placed in the open end of any vertical riser discharge pipe.

Coordinate Methods

In the coordinate method, coordinates of the jet issuing from the end of a pipe are measured. The flow from pipes may be measured whether the pipe is discharging vertically upward, horizontally, or at some angle with the horizontal. Since the discharge pipe can be set in a horizontal position for measurement purposes, there is no need here for a discussion of flow from pipe in an angular position.

Coordinate methods are used to measure the flow from flowing wells (discharging vertically) and from small pumping plants (discharging horizontally). These methods have limited accuracy owing to the difficulty in making accurate measurements of the coordinates of the jet. They should be used only where facilities for making more accurate measurements by other methods are not available and where an error of up to 10 percent is permissible.

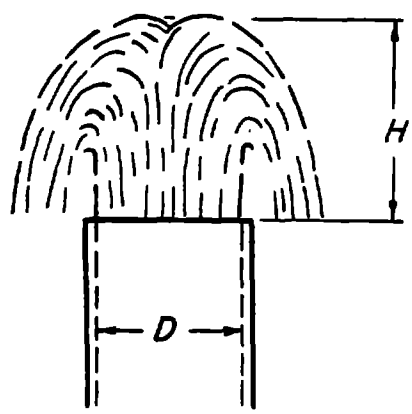

Figure 9-13--Required measurements to obtain flow from vertical pipes

To measure the flow from pipes discharging vertically upward, it is only necessary to measure the inside diameter of the pipe (D) and the height of the jet above the pipe outlet (H) (fig. 9-13). Table 9-8 gives discharge values for pipe diameters up to 12 inches and jet heights up to 40 inches.

Table 9-8.--Flow from vertical pipes[1]

Jet height (inches)	Diameter of pipe (inches)															
	2 Std.[2]	3 Std.	4 O.D.[3]	4 Std.	5 O.D.	5 Std.	6 O.D.	6 Std.	8 O.D.	8 Std.	10 O.D.	10 Std.	12 O.D.	12 Std.
	G.p.m.	G.p.m.	G.p.m.		G.p.m.		G.p.m.		G.p.m.		G.p.m.		G.p.m.	
2.....	28	57	75	86	103	115	137	150	200	215	265	285	330	355
2 1/2.....	31	69	95	108	132	150	182	205	275	290	357	385	450	480
3.....	34	78	112	128	160	183	225	250	340	367	450	490	570	610
3 1/2.....	37	86	124	145	183	210	262	293	405	440	555	610	705	755
4.....	40	92	135	160	205	235	295	330	465	510	660	725	845	910
4 1/2	42	98	144	173	225	257	320	365	520	570	760	845	980	1060
5.....	45	104	154	184	240	275	345	395	575	630	840	940	1120	1200
6.....	50	115	169	205	266	306	385	445	670	730	1000	1125	1370	1500
7.....	54	125	186	223	293	336	420	485	750	820	1150	1275	1600	1730
8.....	58	134	202	239	315	360	450	520	810	890	1270	1420	1775	1950
9.....	62	143	215	254	335	383	480	550	870	955	1360	1550	1930	2140
10.....	66	152	227	268	356	405	510	585	925	1015	1450	1650	2070	2280
12.....	72	167	255	295	390	450	565	650	1010	1120	1600	1830	2300	2550
14.....	78	182	275	320	420	485	610	705	1100	1220	1730	2000	2530	2800
16.....	83	195	295	345	455	520	655	755	1180	1300	1870	2140	2720	3000
18.....	89	208	315	367	480	555	700	800	1265	1400	2000	2280	2900	
20.....	94	220	333	388	510	590	740	850	1335	1480	2100	2420		
25.....	107	248	377	440	580	665	830	960	1520	1670	2380	2720		
30.....	117	275	420	485	640	740	925	1050	1690	1870	2650	3000		
35.....	127	300	455	525	695	800	1000	1150	1820	2020	2850			
40.....	137	320	490	565	745	865	1075	1230	1970	2160				

[1] Table prepared from discharge curves in Utah Engin. Expt. Sta. Bul. 5, "Measurement of Irrigation Water," June 1955.
[2] Standard pipe.
[3] Outside diameter of well casing.

To measure the flow from pipes discharging horizontally, it is necessary to measure both a horizontal and a vertical distance from some point on the end of the pipe to a similar point in the jet. For convenience, these coordinates are measured from the top of the inside of the pipe to a point on the top of the jet (fig. 9-14). These horizontal and vertical distances are called X and Y ordinates, respectively.

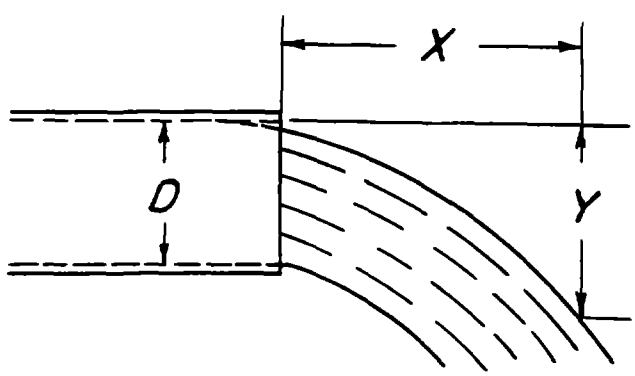

Figure 9-14--Required measurements to obtain flow from horizontal pipes

For reasonably accurate results, the discharge pipe must be level and long enough to permit the water to flow smoothly as it issues from the pipe. Table 9-9 gives discharge values for pipe diameters up to 6 inches where the ordinate X is selected to be 0, 6, 12, or 18 inches. For pipes flowing less than 0.8 full at the end, the vertical distance Y can be measured at the end of the pipe where X = 0. Table 9-9 is used to obtain the discharge. Table 9-9 is also applicable either to conditions of full flow or partial flow.

Table 9-9.--Flow from horizontal pipes[1]

WHEN X = 0

Y (inches)	Size of pipe (nominal diameter)				
	2-inch	3-inch	4-inch	5-inch	6-inch
	G.p.m.	G.p.m.	G.p.m.	G.p.m.	G.p.m.
0.20		67.7	180	308	
.30		66.5	175	303	530
.40		65.1	171	298	518
.50		63.6	166	293	506
.60	18.3	62.0	161	287	494
.70	17.6	60.4	156	282	482
.80	16.7	58.4	150	277	470
.90	15.4	55.7	145	271	458
1.00	13.7	53.1	139	265	446
1.20	9.5	46.9	128	251	422
1.40	6.0	40.5	115	237	398
1.60		31.9	102	221	373
1.80		24.0	90	205	347
2.00		17.3	77	187	321
2.20		11.8	64	167	295
2.40		7.3	52	147	270
2.60			41	127	246
2.80			32	108	223
3.00			24	90	200
3.30			13	65	167
3.60				45	137
3.90				29	111
4.20					86
4.50					64
4.80					45

[1] See footnote at end of table.

Table 9-9.--Flow from horizontal pipes[1]--Continued

WHEN X = 6 INCHES

Y (inches)	Size of pipe (nominal diameter)				
	2-inch	3-inch	4-inch	5-inch	6-inch
	G.p.m.	G.p.m.	G.p.m.	G.p.m.	G.p.m.
0.24	177	310	548		
.36	146	274	503	969	1243
.48	126	247	462	857	1113
.60	111	229	435	772	1019
.72	100	215	404	705	947
.84	92	202	377	646	889
.96	85	193	355	606	844
1.08	79	184	337	574	808
1.20	75	175	319	543	772
1.80	60	139	265	449	660
2.40	51	119	229	390	583
3.00	45	105	206	350	525
3.60	40	94	188	314	476
4.20	37	86	169	278	431
4.80	35	79	151	238	386
5.40	32	71	133	193	332
6.00	30	63	116	150	247
6.60	27	50	99	112	
7.20	25	38	83		
7.80	23	29	69		
8.40	20				

WHEN X = 12 INCHES

.96	157	319	570	1014	
1.08	148	305	548	974	1315
1.20	139	292	530	925	1257
1.80	114	247	444	763	1055
2.40	99	215	395	655	929
3.00	87	193	359	583	844
3.60	79	176	332	530	772
4.20	73	161	305	489	718
4.80	68	149	287	458	673
5.40	63	140	269	426	633
6.00	60	132	256	404	597
6.60	57	126	242	386	574
7.20	54	120	233	368	548
7.80	52	114	224	355	525

[1]See footnote at end of table.

Table 9-9.--Flow from horizontal pipes[1]--Continued

WHEN X = 18 INCHES

Y (inches)	Size of pipe (nominal diameter)				
	2-inch	3-inch	4-inch	5-inch	6-inch
	G.p.m.	G.p.m.	G.p.m.	G.p.m.	G.p.m.
1.80	166	346	624	1014	1400
2.40	144	305	557	907	1261
3.00	129	274	503	826	1153
3.60	117	251	462	754	1068
4.20	109	233	431	700	992
4.80	101	220	404	655	934
5.40	95	206	382	615	884
6.00	89	197	364	579	839
6.60	84	187	346	548	799
7.20	81	180	332	521	763
7.80	77	172	319	498	732
8.40	75	166	305	476	705

[1] Table for standard steel pipe prepared from data resulting from actual experiments conducted at Purdue Univ. and reported in Purdue Engin. Expt. Sta. Bul. 32, "Measurement of Pipe Flow by the Coordinate Method," August 1928.

Methods of Measuring Channel Flow

Current Meters

The current meter measures the velocity of flowing water in an open channel. It is usually used in the larger ditches and streams where direct methods of measurement are not practicable. Rohwer[2] has used specially outfitted current meters to measure the velocity of flow in pipes; however, since this is not the principal use made of such meters, the reader is referred to his bulletin for additional information.

Basically the current meter is a wheel having several cups or vanes. This wheel is rotated by the action of the current, and the speed of the rotating wheel indicates the velocity of the current. Several devices have been devised for determining the speed of the wheel. The one most commonly used is a mechanism that makes and breaks an electric circuit at each revolution or at a specified number of revolutions of the wheel. Included in the circuit is a telephone receiver allowing the operator to count the number of revolutions in any selected period of

[2] Rohwer, C. "The Use of Current Meters in Measuring Pipe Discharges." Colo. Agr. Expt. Sta. Tech. Bul. 29. 1942. (Out of print. Available in libraries only.)

time--the time being determined by means of a stopwatch. More elaborate arrangements that include mechanical recording devices are available.

Current meters are either suspended by cables, which allow the meters to move freely both horizontally and vertically, or are mounted on rods, which keep the meters stationary. In the former, a vaned tailpiece is used to keep the meter facing into the current. Cable suspension is used for gaging large streams; rod suspension is more for gaging small streams or ditches. The cable or rod is usually marked in feet and hundredths, thus permitting the operator to determine depths of flow and to take the meter readings at the proper predetermined depths.

Two types of current meters are in general use: The cup meter and the propeller meter. The cup meter has six conical cups mounted on a vertical axis pivoted at the ends and free to rotate between the rigid arms of a U-shaped clevis to which a vaned tailpiece is attached (fig. 9-15). Rotation is made by more pressure from the current being exerted on the inside of the cups than on the outside of the cups. The cup meter registers the correct velocity regardless of which way the meter is pointed in relation to the direction of the current.

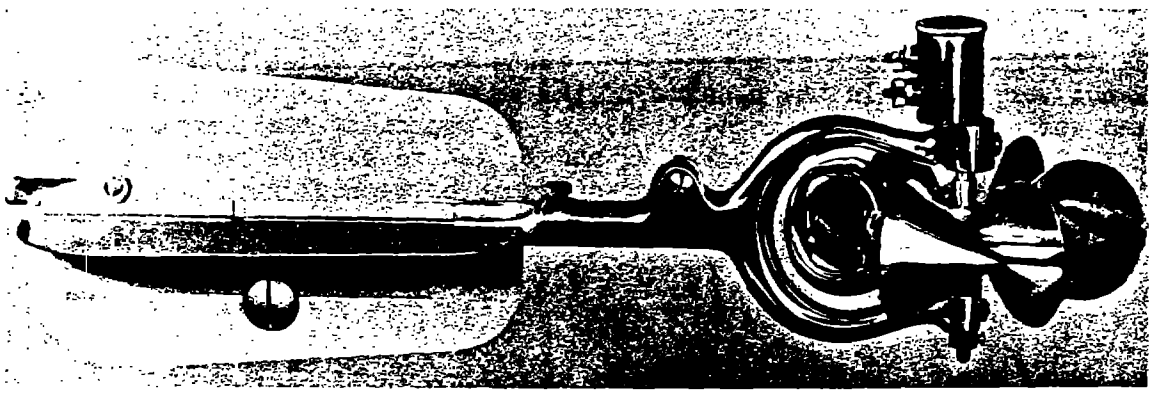

Figure 9-15--Cup-type current meter

Propeller meters are available in two forms: The screw meter and the spoked meter with vanes. Both rotate around a horizontal axis by direct action of the current. Unlike cup meters, propeller meters are sensitive to oblique flow, and the horizontal axis should be kept parallel to the direction of the current.

The establishment of the relation between the speed of the meter wheel (r.p.m.) and the velocity of the water is known as "rating of meter." This is accomplished by towing the meter through still water at uniform velocities and recording the revolutions per minute for each velocity. A rating curve is plotted from these recordings. Current meters are

rated by the manufacturer, and a rating table is furnished. Current meters should be rated once a year or more often depending on how frequently they are used.

Current-meter measurements are usually taken from a walkway or bridge across the stream or ditch. Very shallow streams can be waded while large rivers may require the use of a boat or cableway.

A zero station or reference point is established on one bank of the stream, and a tape is stretched across the stream for measuring horizontal distances. Soundings and current-meter readings are taken at regular intervals, usually from 2 to 10 feet depending on the width of the stream. Readings should be made where there are abrupt changes in velocity or in the depth of flow.

The problem is to determine the mean velocity at each vertical where readings are taken. This may be done by one of several methods. The most common method requires that readings be taken at only two points in each vertical; namely at 0.2 and 0.8 of the sounded depth measured from the water surface. The average of these two readings is the mean velocity in the vertical. Where the depth of flow becomes too shallow to obtain two readings, a single reading taken at 0.6 depth represents the mean velocity.

The discharge of each segment of the cross section (area between adjacent verticals) is the product of the area of the segment and the mean velocity in the segment. If d_1 and d_2 represent the depths of flow at two adjacent verticals, V_1 and V_2 the respective mean velocities in these verticals, and W the distance between the verticals, then the discharge in that part of the cross section is computed as follows:

$$Q = W \left(\frac{d_1 + d_2}{2}\right) \left(\frac{V_1 + V_2}{2}\right)$$

The total discharge of the stream is the sum of such computations for the entire cross section. Figure 9-16 shows an example of typical current-meter notes. The observations required and computation procedure used are clearly shown in this example.

Weirs

In its simplest form, a weir consists of a bulkhead of timber, metal, or concrete with an opening of fixed dimensions cut in its top edge. This opening is called the weir notch, its bottom edge is the weir crest, and the depth of flow over the crest (measured at a specified distance upstream from the bulkhead) is called the head. The overflowing sheet of water is known as the nappe.

Weirs may be divided into two general classes: (1) Sharp-crested weirs, and (2) weirs that are not sharp-crested. Only sharp-crested weirs are

CURRENT-METER NOTES

Date 7/20/57 Time 9:20AM to 10:15 AM Stream Main Ditch - Riverside Dist
Observer John Wm. Doe Location Bridge at U.S. Highway 60
Meter 266 Gage Height, beg. 10.02 end 9.96 mean 9.99
Total Area 327.9 Mean Velocity 2.41.3 Discharge 791.23

Observations								Computations			
Dist. from initial point	Water depth	Depth of observation	Time in seconds	Revolutions	Velocity: At point	Velocity: Mean in vertical	Velocity: Mean in section	Mean depth	Width	Area	Discharge
0+04	0.0	0.6 Depth					0.83	1.50	6.0	9.0	7.47
+10	3.0	1.80	54.2	40	1.65	1.65					
							1.82	4.50	5.0	22.5	40.95
+15	6.0	1.20	59.8	60	2.24	1.98					
		4.80	51.8	40	1.73						
							2.19	6.90	5.0	34.5	75.55
+20	7.8	1.56	48.4	60	2.76	2.40					
		6.24	43.8	40	2.04						
							2.59	8.25	5.0	41.2	106.71
+25	8.7	1.74	43.2	60	3.10	2.77					
		6.96	54.8	60	2.44						
							2.66	8.55	5.0	42.8	113.85
+30	8.4	1.68	46.0	60	2.90	2.54					
		6.72	41.0	40	2.18						
							2.77	8.70	5.0	43.5	120.50
+35	9.0	1.80	52.4	80	3.40	3.00					
		7.20	51.2	60	2.61						
							2.91	9.00	5.0	45.0	130.95
+40	9.0	1.80	55.0	80	3.24	2.81					
		7.20	56.0	60	2.39						
							2.67	8.30	5.0	41.5	110.81
+45	7.6	1.52	47.2	60	2.83	2.53					
		6.08	60.0	60	2.23						
							2.16	6.55	5.0	32.8	70.85
+50	5.5	1.10	43.4	40	2.06	1.79					
		4.40	59.2	40	1.52						
							0.90	2.75	5.5	15.1	13.59
+56.5	0.0										
							Totals			327.9	791.23

Figure 9-16--Typical current meter notes

discussed, since this type is normally used in the measurement of irrigation water. Weirs that are not sharp-crested, sometimes called broad-crested weirs, are commonly incorporated in hydraulic structures of various types but are not commonly used to measure the flow of water.

If the sides and bottom of the stream or channel are far enough from the perimeter of the weir notch, the water particles approach the notch in converging paths in all directions, continue to travel in curvilinear paths for some distance after leaving the notch, and cause the nappe to contract. When these distances are great enough to cause water to pond above the weir so that it approaches the notch at a velocity not exceeding 0.3 foot per second, the weir is said to have complete contractions. When these distances are not great enough to cause this condition, the weir is said to have partially suppressed contractions.

In order to assure complete end contractions, the distances between the ends of the notch and the sides of the channel or stream should not be less than 2 times the depth of flow over the weir or the head (H) (fig. 9-17). For complete bottom contraction, the weir crest should be placed no closer than 2H from the bottom of the channel.

When the water surface downstream from the bulkhead is far enough below the crest so that air moves freely below the nappe, the weir is said to have free discharge. If the discharge is partially under water, the weir is said to be submerged.

Weirs with complete contractions and free discharge are most commonly used for the measurement of water. Weirs with suppressed contractions and submerged weirs are outside the scope of this handbook. For a complete discussion of these, the reader is referred to King's Handbook of Hydraulics.

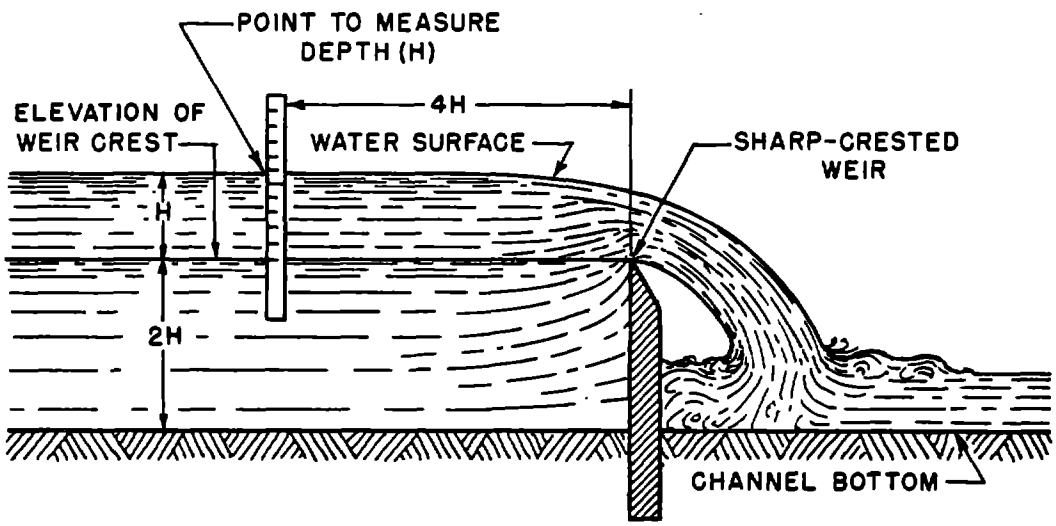

Figure 9-17--Profile of a sharp-crested weir

Standard sharp-crested weirs are of one of three general types depending on the shape of the weir notch: (1) Rectangular-notch weir, the notch of which has a level crest and vertical sides; (2) trapezoidal or Cipolletti weir, which has a level crest and sides of the notch sloping outward from the vertical at one horizontal to four vertical; (3) 90° triangular-notch weir formed by the sides of the notch sloping outward from the vertical at a 45° angle and meeting at a point in the center of the bulkhead. This latter type has no crest length.

The weir selected should be that most adapted to the circumstances and conditions at the site of measurement. Usually, the rate of flow expected, or the limiting rates in the case of fluctuating streams, can be roughly estimated in advance and used to select both the type of weir to be used and the dimensions of the weir. In selecting the type of weir, consideration should be given the following:

1. The head should be no less than 0.2 foot for the rate of flow expected and should not exceed 2 feet.
2. For rectangular and trapezoidal weirs, the head should not exceed one-third of the weir length.
3. Weir length should be selected so that the head for design discharge will be near the maximum subject to the limitations in 1 and 2.

The 90° triangular-notch weir gives the most accurate results when measuring small discharges of less than 1 second-foot and is particularly adapted to measuring fluctuating rates of flow provided the maximum discharge does not exceed 10 second-feet. Rectangular- and trapezoidal-notch weirs are used to measure discharges up to 75 second-feet or more.

The rectangular-notch weir.--This is probably the oldest type now in common use, and its simplicity of construction makes it the most popular (fig. 9-18).

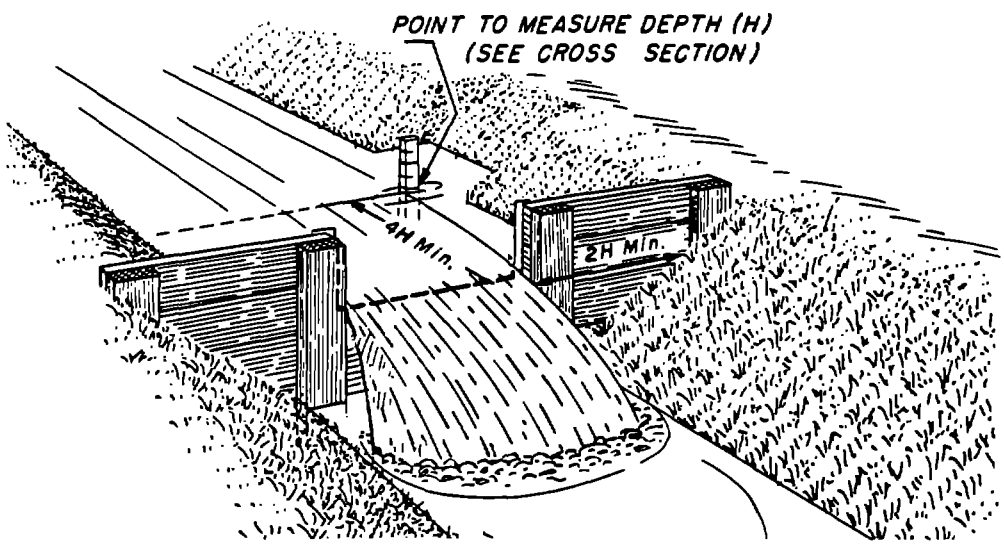

Figure 9-18--Rectangular-notch weir with end contractions

Numerous formulas have been developed for computing the discharge of rectangular-notch, sharp-crested weirs with complete contractions. The most popular and generally accepted is the Francis formula.

$$Q = 3.33\ (L - 0.2H)H^{3/2}$$

where Q = discharge in cubic feet per second
L = Length of the notch in feet
H = head in feet or the vertical difference between the elevation of the weir crest and the elevation of the weir pond

The elevation of the weir pond should be measured at a point no less than 4H upstream from the bulkhead.

Table 9-10 gives discharge values for weir-notch lengths up to 10 feet and depths of flow or head up to 1.5 feet.

The trapezoidal-notch or Cipolletti weir.--This is shown in figure 9-19. The slope of the sides, one horizontal to four vertical, is that required to secure a discharge in the triangular part of the notch about equal to the decrease in discharge caused by end contractions. Thus no correction for end contractions is required.

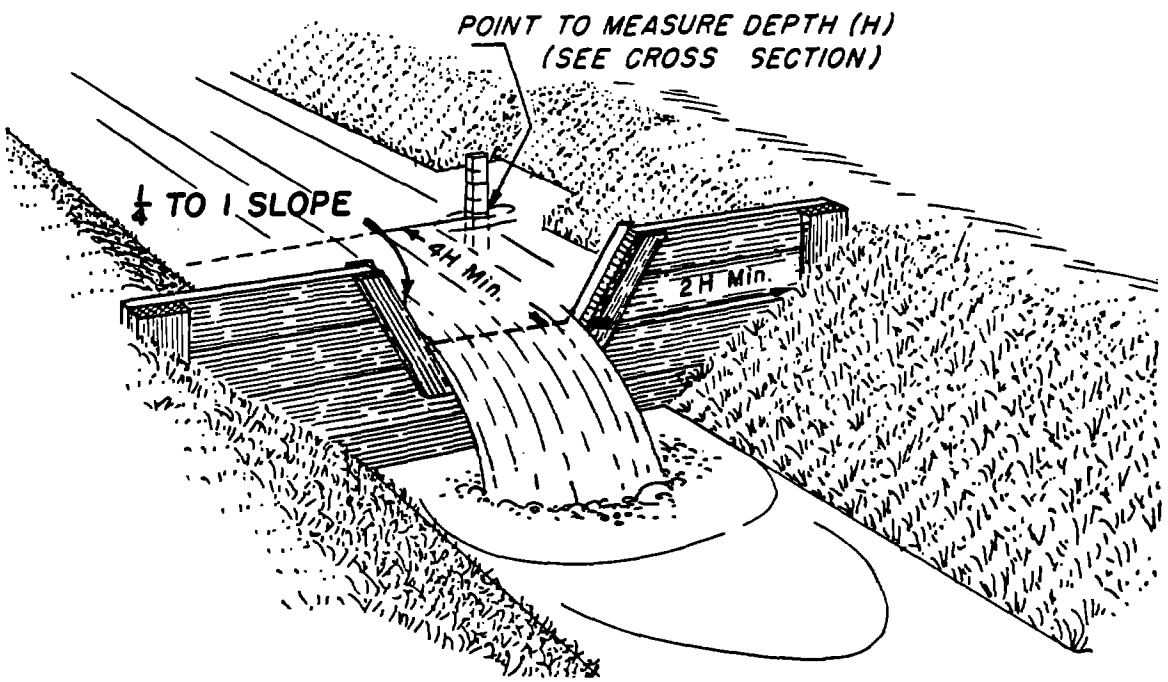

Figure 9-19--Trapezoidal-notch or Cipolletti weir

Table 9-10.--Discharge values for rectangular weirs with complete contractions

Head, H[1]		Discharge, Q, for crest length, L, of—							
		1 foot	1.5 feet	2 feet	3 feet	4 feet	6 feet	8 feet	10 feet
Feet	*Inches*	*Second-feet*	*Second-feet*	*Second-feet*	*Second-feet*	*Second-feet*	*Second-feet*	*Second-feet*	*Second-feet*
0.10	1 5/16	0.11	0.16	0.22	0.33	0.44	0.62	0.84	1.05
.11	1 9/16	.12	.18	.25	.37	.50	.73	.97	1.21
.12	1 7/16	.14	.20	.28	.42	.57	.83	1.10	1.38
.13	1 9/16	.15	.22	.32	.47	.64	.93	1.24	1.56
.14	1 11/16	.17	.25	.35	.53	.71	1.04	1.39	1.74
.15	1 13/16	.19	.28	.39	.58	.79	1.15	1.54	1.93
.16	1 15/16	.21	.31	.43	.64	.86	1.27	1.70	2.12
.17	2 1/16	.23	.34	.47	.70	.95	1.39	1.86	2.33
.18	2 3/16	.25	.37	.51	.76	1.03	1.52	2.03	2.53
.19	2 1/4	.27	.40	.55	.83	1.11	1.64	2.20	2.75
.20	2 3/8	.29	.44	.59	.89	1.19	1.78	2.37	2.97
.21	2 1/2	.31	.47	.63	.95	1.28	1.91	2.55	3.19
.22	2 5/8	.34	.50	.68	1.02	1.37	2.05	2.73	3.42
.23	2 3/4	.36	.54	.72	1.09	1.46	2.19	2.92	3.66
.24	2 7/8	.38	.57	.77	1.16	1.55	2.33	3.11	3.90
.25	3	.40	.61	.82	1.23	1.65	2.48	3.31	4.14
.26	3 1/8	.43	.65	.86	1.31	1.75	2.63	3.51	4.39
.27	3 1/4	.45	.68	.91	1.38	1.85	2.78	3.71	4.65
.28	3 3/8	.48	.72	.96	1.46	1.95	2.93	3.92	4.91
.29	3 1/2	.50	.76	1.02	1.53	2.05	3.09	4.13	5.17
.30	3 5/8	.53	.80	1.07	1.61	2.16	3.25	4.34	5.44
.31	3 3/4	.55	.84	1.12	1.69	2.26	3.41	4.56	5.71
.32	3 13/16	.58	.88	1.18	1.77	2.37	3.58	4.78	5.99
.33	3 15/16	.61	.92	1.23	1.86	2.48	3.75	5.01	6.27
.34	4 1/16	.63	.96	1.28	1.94	2.60	3.92	5.24	6.56
.35	4 3/16	.66	1.00	1.34	2.02	2.71	4.09	5.47	6.85
.36	4 5/16	.69	1.04	1.40	2.11	2.82	4.26	5.70	7.14
.37	4 7/16	.72	1.08	1.45	2.20	2.94	4.44	5.94	7.44
.38	4 9/16	.74	1.13	1.51	2.28	3.06	4.62	6.18	7.74
.39	4 11/16	.77	1.17	1.57	2.37	3.18	4.80	6.43	8.05
.40	4 13/16	.80	1.21	1.63	2.46	3.30	4.99	6.67	8.36
.41	4 15/16	.83	1.26	1.69	2.55	3.42	5.17	6.92	8.67
.42	5 1/16	.86	1.30	1.75	2.65	3.54	5.36	7.18	8.99
.43	5 3/16	.89	1.35	1.81	2.74	3.67	5.55	7.43	9.31
.44	5 1/4	.92	1.40	1.88	2.83	3.80	5.75	7.69	9.63
.45	5 3/8	.96	1.44	1.94	2.93	3.93	5.94	7.95	9.96
.46	5 1/2	.99	1.49	2.00	3.03	4.05	6.14	8.22	10.3
.47	5 5/8	1.02	1.54	2.07	3.12	4.18	6.34	8.48	10.6
.48	5 3/4	1.05	1.59	2.13	3.22	4.32	6.54	8.75	11.0
.49	5 7/8	1.08	1.64	2.20	3.32	4.45	6.74	9.03	11.3
.50	6	1.11	1.68	2.26	3.42	4.58	6.95	9.30	11.7
.51	6 1/8	1.15	1.73	2.33	3.52	4.72	7.15	9.58	12.0
.52	6 1/4	1.18	1.78	2.40	3.62	4.86	7.36	9.86	12.4
.53	6 3/8	1.21	1.84	2.46	3.73	4.99	7.57	10.1	12.7
.54	6 1/2	1.25	1.89	2.53	3.83	5.13	7.79	10.4	13.1
.55	6 5/8	1.28	1.94	2.60	3.94	5.27	8.00	10.7	13.4
.56	6 3/4	1.31	1.99	2.67	4.04	5.42	8.22	11.0	13.8
.57	6 13/16	1.35	2.04	2.74	4.15	5.56	8.43	11.3	14.2
.58	6 15/16	1.38	2.09	2.81	4.26	5.70	8.65	11.6	14.5
.59	7 1/16	1.42	2.15	2.88	4.36	5.85	8.88	11.9	14.9
.60	7 3/16	1.45	2.20	2.96	4.47	6.00	9.10	12.2	15.3
.61	7 5/16	1.49	2.25	3.03	4.59	6.14	9.33	12.5	15.7
.62	7 7/16	1.52	2.31	3.10	4.69	6.29	9.55	12.8	16.1
.63	7 9/16	1.56	2.36	3.17	4.81	6.44	9.78	13.1	16.4
.64	7 11/16	1.60	2.42	3.25	4.92	6.59	10.0	13.4	16.8

See note at end of table.

Table 9-10.--Discharge values for rectangular weirs with complete contractions--continued

Head, H[1]		Discharge, Q, for crest length, L, of—							
		1 foot	1.5 feet	2 feet	3 feet	4 feet	6 feet	8 feet	10 feet
Feet	*Inches*	*Second-feet*	*Second-feet*	*Second-feet*	*Second-feet*	*Second-feet*	*Second-feet*	*Second-feet*	*Second-feet*
0.65	7 15/16	1.63	2.47	3.32	5.03	6.75	10.2	13.7	17.2
.66	7 15/16	1.67	2.53	3.40	5.15	6.90	10.5	14.0	17.6
.67	8 3/16	1.71	2.59	3.47	5.26	7.05	10.7	14.4	18.0
.68	8 3/16	1.74	2.64	3.56	5.38	7.21	10.9	14.7	18.4
.69	8¼	1.78	2.70	3.63	5.49	7.36	11.2	15.0	18.8
.70	8⅜	1.82	2.76	3.71	5.61	7.52	11.4	15.3	19.2
.71	8½	1.86	2.81	3.78	5.73	7.68	11.7	15.7	19.6
.72	8⅝	1.90	2.87	3.86	5.85	7.84	11.9	16.0	20.1
.73	8¾	1.93	2.93	3.94	5.97	8.00	12.2	16.3	20.5
.74	8⅞	1.97	2.99	4.02	6.09	8.17	12.4	16.6	20.9
.75	9	2.01	3.05	4.10	6.21	8.33	12.7	17.0	21.3
.76	9⅛	2.05	3.11	4.18	6.33	8.49	12.9	17.3	21.7
.77	9¼	2.09	3.17	4.26	6.45	8.66	13.2	17.7	22.2
.78	9⅜	2.13	3.23	4.34	6.58	8.82	13.4	18.0	22.6
.79	9½	2.17	3.29	4.42	6.70	8.99	13.7	18.3	23.0
.80	9⅝	2.21	3.35	4.51	6.83	9.16	13.9	18.7	23.4
.81	9¾	2.25	3.41	4.59	6.95	9.33	14.2	19.0	23.9
.82	9 13/16	2.29	3.47	4.67	7.08	9.50	14.4	19.4	24.3
.83	9 15/16	2.33	3.54	4.75	7.21	9.67	14.7	19.7	24.8
.84	10 1/16	2.37	3.60	4.84	7.33	9.84	15.0	20.1	25.2
.85	10 3/16	2.41	3.66	4.92	7.46	10.0	15.2	20.4	25.7
.86	10 5/16	2.46	3.72	5.01	7.59	10.2	15.5	20.8	26.1
.87	10 7/16	2.50	3.79	5.10	7.72	10.4	15.7	21.1	26.6
.88	10 9/16	2.54	3.85	5.18	7.85	10.5	16.0	21.5	27.0
.89	10 11/16	2.58	3.92	5.27	7.99	10.7	16.3	21.9	27.5
.90	10 13/16	2.62	3.98	5.35	8.12	10.9	16.5	22.2	27.9
.91	10 15/16	2.67	4.05	5.44	8.25	11.1	16.8	22.6	28.4
.92	11 1/16	2.71	4.11	5.53	8.38	11.2	17.1	23.0	28.8
.93	11 3/16	2.75	4.18	5.62	8.52	11.4	17.4	23.3	29.3
.94	11¼	2.79	4.24	5.71	8.65	11.6	17.6	23.7	29.8
.95	11⅜	2.84	4.31	5.80	8.79	11.8	17.9	24.1	30.2
.96	11½	2.88	4.37	5.89	8.93	12.0	18.2	24.5	30.7
.97	11⅝	2.93	4.44	5.98	9.06	12.2	18.5	24.8	31.2
.98	11¾	2.97	4.51	6.07	9.20	12.3	18.8	25.2	31.7
.99	11⅞	3.01	4.57	6.15	9.34	12.5	19.0	25.6	32.2
1.00	12	3.06	4.64	6.25	9.48	12.7	19.3	26.0	32.6
1.01	12⅛	------	4.71	6.34	9.62	12.9	19.6	26.4	33.1
1.02	12¼	------	4.78	6.43	9.76	13.1	19.9	26.7	33.6
1.03	12⅜	------	4.85	6.52	9.90	13.3	20.2	27.1	34.1
1.04	12½	------	4.92	6.62	10.0	13.5	20.5	27.5	34.6
1.05	12⅝	------	4.98	6.71	10.2	13.7	20.7	27.9	35.1
1.06	12¾	------	5.05	6.80	10.3	13.8	21.0	28.3	35.6
1.07	12 13/16	------	5.12	6.90	10.5	14.0	21.3	28.7	36.1
1.08	12 15/16	------	5.20	6.99	10.6	14.2	21.6	29.1	36.6
1.09	13 1/16	------	5.26	7.09	10.8	14.4	21.9	29.5	37.1
1.10	13 3/16	------	5.34	7.19	10.9	14.6	22.2	29.9	37.6
1.11	13 5/16	------	5.41	7.28	11.0	14.8	22.5	30.3	38.1
1.12	13 7/16	------	5.48	7.38	11.2	15.0	22.8	30.7	38.6
1.13	13 9/16	------	5.55	7.47	11.3	15.2	23.1	31.1	39.1
1.14	13 11/16	------	5.62	7.57	11.5	15.4	23.4	31.5	39.6
1.15	13 13/16	------	5.69	7.66	11.6	15.6	23.7	31.9	40.1
1.16	13 15/16	------	5.77	7.76	11.8	15.8	24.0	32.3	40.6
1.17	14 1/16	------	5.84	7.86	11.9	16.0	24.3	32.7	41.2
1.18	14 3/16	------	5.91	7.96	12.1	16.2	24.6	33.1	41.7
1.19	14¼	------	5.98	8.06	12.2	16.4	24.9	33.6	42.2

See note at end of table.

Table 9-10.--Discharge values for rectangular weirs with complete contractions--continued

Head, H[1]		Discharge, Q, for crest length, L, of—							
		1 foot	1.5 feet	2 feet	3 feet	4 feet	6 feet	8 feet	10 feet
Feet	*Inches*	*Second-feet*	*Second-feet*	*Second-feet*	*Second-feet*	*Second-feet*	*Second-feet*	*Second-feet*	*Second-feet*
1.20	14⅝	------	6.06	8.16	12.4	16.6	25.2	34.0	42.7
1.21	14½	------	6.13	8.26	12.5	16.8	25.5	34.4	43.2
1.22	14⅝	------	6.20	8.35	12.7	17.0	25.8	34.8	43.8
1.23	14¾	------	6.28	8.46	12.8	17.2	26.2	35.2	44.3
1.24	14⅞	------	6.35	8.56	13.0	17.4	26.5	35.6	44.8
1.25	15	------	6.43	8.66	13.1	17.6	26.8	36.1	45.4
1.26	15⅛	------	--------	--------	13.3	17.9	27.1	36.5	45.9
1.27	15¼	------	--------	--------	13.4	18.1	27.4	36.9	46.4
1.28	15⅜	------	--------	--------	13.6	18.3	27.7	37.3	47.0
1.29	15½	------	--------	--------	13.8	18.5	28.0	37.8	47.5
1.30	15⅝	------	--------	--------	13.9	18.7	28.3	38.2	48.1
1.31	15¾	------	--------	--------	14.1	18.9	28.7	38.6	48.6
1.32	15 13/16	------	--------	--------	14.2	19.1	29.0	39.1	49.2
1.33	15 15/16	------	--------	--------	14.4	19.3	29.3	39.5	49.7
1.34	16 1/16	------	--------	--------	14.6	19.6	29.6	39.9	50.3
1.35	16 3/16	------	--------	--------	14.7	19.8	30.0	40.4	50.8
1.36	16 5/16	------	--------	--------	14.9	20.0	30.3	40.8	51.4
1.37	16 7/16	------	--------	--------	15.0	20.2	30.6	41.3	51.9
1.38	16 9/16	------	--------	--------	15.2	20.4	30.9	41.7	52.5
1.39	16 11/16	------	--------	--------	15.4	20.6	31.3	42.1	53.1
1.40	16 13/16	------	--------	--------	15.5	20.9	31.6	42.6	53.6
1.41	16 15/16	------	--------	--------	15.7	21.1	31.9	43.0	54.2
1.42	17 1/16	------	--------	--------	15.9	21.3	32.2	43.5	54.7
1.43	17 3/16	------	--------	--------	16.0	21.5	32.6	43.9	55.3
1.44	17¼	------	--------	--------	16.2	21.7	32.9	44.4	55.9
1.45	17⅜	------	--------	--------	16.3	22.0	33.2	44.8	56.5
1.46	17½	------	--------	--------	16.5	22.2	33.6	45.3	57.0
1.47	17⅝	------	--------	--------	16.7	22.4	33.9	45.7	57.6
1.48	17¾	------	--------	--------	16.9	22.6	34.2	46.2	58.2
1.49	17⅞	------	--------	--------	17.0	22.9	34.6	46.6	58.8
1.50	18	------	--------	--------	17.2	23.1	34.9	47.1	59.3

[1] Values of discharge for heads up to 0.20 foot (crest lengths 1, 1.5, 2, 3, and 4 feet) do not follow the formula, but are taken directly from the calibration curve. The discharge for heads 0.10 to 1.5 feet for the 6-, 8-, and 10-foot weirs are as computed by the formula $Q=3.33\ (L-0.2H)\ H^{3/2}$.

Note: Table taken from Parshall, R. L. Measuring Water in Irrigation Channels, U.S. Dept. Agr. Cir. 843, 8-11 p. 1950. (Out of print.)

The formula generally accepted for computing the discharge through trapezoidal or Cipolletti weirs with complete contractions is:

$$Q = 3.367LH^{3/2}$$

where Q = discharge in cubic feet per second
L = length of the notch (measured at the crest) in feet
H = head in feet or the vertical difference between the elevation of the weir crest and the elevation of the weir pond.

The elevation of the weir pond should be measured at a point no less than 4H upstream from the bulkhead.

The selected length of notch (L) should be at least 3H and preferably should be 4H or longer.

Table 9-11 gives discharge values for weir notch lengths up to 10 feet and heads or depths of flow up to 1.5 feet.

The 90-degree triangular-notch weir.--This is shown in figure 9-20. While it is possible to measure the discharge through triangular notches with slopes other than those shown, 45° slopes are commonly accepted as standard.

The basic formula for discharge through triangular weirs is

$$Q = C \tan \frac{\theta}{2} H^n$$

Where the angle $\frac{\theta}{2}$ is 45°, its tangent is unity and the equation becomes $Q = CH^n$.

Experiments on 90-degree triangular-notch weirs at the University of Michigan established values of C and n, and the resulting generally accepted formula becomes

$$Q = 2.52H^{2.47}$$

where Q = discharge in cubic feet per second
H = vertical distance in feet between the elevation of the vortex or lowest part of the notch and the elevation of the weir pond.

Table 9-12 gives discharge values for heads up to 1.8 feet.

Table 9-11.--Discharge values for trapezoidal or Cipolletti weirs with complete contractions

Head, H[1]		Discharge, Q, for crest length, L, of—							
		1 foot	1.5 feet	2 feet	3 feet	4 feet	6 feet	8 feet	10 feet
Feet	*Inches*	*Second-feet*	*Second-feet*	*Second-feet*	*Second-feet*	*Second-feet*	*Second-feet*	*Second-feet*	*Second-feet*
0.10	1 5/16	0.11	0.16	0.23	0.33	0.44	0.64	0.85	1.06
.11	1 9/16	.12	.18	.26	.38	.50	.74	.98	1.23
.12	1 7/16	.14	.21	.29	.43	.57	.84	1.12	1.40
.13	1 9/16	.16	.24	.32	.48	.64	.95	1.26	1.58
.14	1 11/16	.17	.26	.36	.54	.71	1.06	1.41	1.73
.15	1 13/16	.19	.29	.39	.59	.79	1.17	1.56	1.96
.16	1 15/16	.21	.32	.43	.65	.87	1.29	1.72	2.15
.17	2 1/16	.23	.36	.47	.71	.96	1.41	1.89	2.36
.18	2 3/16	.25	.39	.51	.77	1.04	1.54	2.06	2.57
.19	2 1/4	.28	.42	.56	.83	1.12	1.67	2.23	2.79
.20	2 3/8	.30	.45	.60	.90	1.20	1.81	2.41	3.01
.21	2 1/2	.32	.48	.64	.97	1.29	1.94	2.59	3.24
.22	2 5/8	.35	.52	.69	1.04	1.38	2.08	2.78	3.47
.23	2 3/4	.37	.55	.74	1.11	1.47	2.23	2.97	3.71
.24	2 7/8	.39	.59	.79	1.18	1.57	2.38	3.17	3.96
.25	3	.42	.63	.84	1.25	1.67	2.53	3.37	4.21
.26	3 1/8	.45	.67	.89	1.33	1.77	2.68	3.57	4.46
.27	3 1/4	.47	.70	.94	1.40	1.87	2.83	3.78	4.72
.28	3 3/8	.50	.74	.99	1.48	1.97	2.99	3.99	4.99
.29	3 1/2	.53	.79	1.04	1.56	2.08	3.15	4.21	5.26
.30	3 5/8	.56	.83	1.10	1.64	2.19	3.32	4.43	5.53
.31	3 3/4	.59	.87	1.15	1.73	2.30	3.49	4.65	5.81
.32	3 13/16	.61	.91	1.21	1.80	2.41	3.66	4.88	6.09
.33	3 15/16	.64	.95	1.27	1.89	2.52	3.83	5.11	6.38
.34	4 1/16	.67	1.00	1.32	1.98	2.64	4.00	5.34	6.67
.35	4 3/16	.70	1.04	1.38	2.07	2.75	4.18	5.58	6.97
.36	4 5/16	.73	1.09	1.44	2.16	2.87	4.36	5.82	7.27
.37	4 7/16	.77	1.13	1.50	2.25	2.99	4.55	6.06	7.58
.38	4 9/16	.80	1.18	1.57	2.34	3.11	4.73	6.31	7.89
.39	4 11/16	.83	1.23	1.63	2.43	3.24	4.92	6.56	8.20
.40	4 13/16	.87	1.28	1.69	2.53	3.36	5.11	6.81	8.52
.41	4 15/16	.90	1.32	1.76	2.62	3.49	5.30	7.07	8.84
.42	5 1/16	.93	1.37	1.82	2.72	3.61	5.50	7.33	9.16
.43	5 3/16	.97	1.42	1.89	2.81	3.74	5.70	7.59	9.49
.44	5 1/4	1.00	1.47	1.95	2.91	3.87	5.90	7.86	9.83
.45	5 3/8	1.04	1.53	2.02	3.01	4.01	6.10	8.13	10.2
.46	5 1/2	1.07	1.58	2.09	3.11	4.14	6.30	8.40	10.5
.47	5 5/8	1.11	1.63	2.16	3.21	4.28	6.51	8.68	10.8
.48	5 3/4	1.15	1.68	2.23	3.32	4.41	6.72	8.96	11.2
.49	5 7/8	1.18	1.74	2.30	3.42	4.55	6.93	9.24	11.5
.50	6	1.22	1.79	2.37	3.53	4.69	7.14	9.52	11.9
.51	6 1/8	1.26	1.85	2.44	3.64	4.83	7.36	9.81	12.3
.52	6 1/4	1.30	1.90	2.51	3.74	4.97	7.57	10.1	12.6
.53	6 3/8	1.34	1.96	2.59	3.85	5.12	7.79	10.4	13.0
.54	6 1/2	1.38	2.02	2.66	3.96	5.26	8.02	10.7	13.4
.55	6 5/8	1.42	2.07	2.74	4.07	5.41	8.24	11.0	13.7
.56	6 3/4	1.46	2.13	2.81	4.18	5.56	8.47	11.3	14.1
.57	6 13/16	1.50	2.19	2.89	4.30	5.71	8.69	11.6	14.5
.58	6 15/16	1.54	2.25	2.97	4.41	5.86	8.92	11.9	14.9
.59	7 1/16	1.58	2.31	3.05	4.53	6.01	9.15	12.2	15.3
.60	7 3/16	1.62	2.37	3.13	4.64	6.17	9.39	12.5	15.6
.61	7 5/16	1.67	2.43	3.20	4.76	6.32	9.62	12.8	16.0
.62	7 7/16	1.71	2.49	3.28	4.88	6.47	9.86	13.1	16.4
.63	7 9/16	1.75	2.55	3.37	5.00	6.63	10.1	13.5	16.8
.64	7 11/16	1.80	2.62	3.45	5.12	6.79	10.3	13.8	17.2

See note at end of table.

Table 9-11.--Discharge values for trapezoidal or Cipolletti weirs with complete contractions--continued

Head, H[1]		Discharge, Q, for crest length, L, of—							
		1 foot	1.5 feet	2 feet	3 feet	4 feet	6 feet	8 feet	10 feet
Feet	*Inches*	*Second-feet*	*Second-feet*	*Second-feet*	*Second-feet*	*Second-feet*	*Second-feet*	*Second-feet*	*Second-feet*
0.65	7 13/16	1.84	2.68	3.53	5.24	6.95	10.6	14.1	17.6
.66	7 15/16	1.89	2.75	3.61	5.36	7.11	10.8	14.4	18.1
.67	8 1/16	1.93	2.81	3.70	5.48	7.28	11.1	14.8	18.5
.68	8 3/16	1.98	2.87	3.79	5.61	7.44	11.3	15.1	18.9
.69	8 1/4	2.02	2.94	3.87	5.73	7.61	11.6	15.4	19.3
.70	8 3/8	2.07	3.01	3.95	5.86	7.77	11.8	15.8	19.7
.71	8 1/2	2.12	3.07	4.04	5.99	7.94	12.1	16.1	20.1
.72	8 5/8	2.16	3.14	4.13	6.12	8.11	12.3	16.5	20.6
.73	8 3/4	2.21	3.21	4.22	6.24	8.28	12.6	16.8	21.0
.74	8 7/8	2.26	3.28	4.31	6.38	8.45	12.9	17.1	21.4
.75	9	2.31	3.35	4.40	6.51	8.62	13.1	17.5	21.9
.76	9 1/8	2.36	3.42	4.49	6.64	8.80	13.4	17.8	22.3
.77	9 1/4	2.41	3.49	4.58	6.77	8.97	13.6	18.2	22.7
.78	9 3/8	2.46	3.56	4.67	6.90	9.15	13.9	18.6	23.2
.79	9 1/2	2.51	3.63	4.76	7.04	9.33	14.2	18.9	23.6
.80	9 5/8	2.56	3.70	4.85	7.18	9.51	14.5	19.3	24.1
.81	9 3/4	2.61	3.77	4.95	7.31	9.69	14.7	19.6	24.5
.82	9 13/16	2.66	3.84	5.04	7.45	9.87	15.0	20.0	25.0
.83	9 15/16	2.71	3.92	5.14	7.59	10.0	15.3	20.4	25.5
.84	10 1/16	2.77	3.99	5.23	7.73	10.2	15.6	20.7	25.9
.85	10 3/16	2.82	4.07	5.33	7.87	10.4	15.8	21.1	26.4
.86	10 5/16	2.87	4.14	5.43	8.01	10.6	16.1	21.5	26.9
.87	10 7/16	2.93	4.22	5.52	8.15	10.8	16.4	21.9	27.3
.88	10 9/16	2.98	4.29	5.62	8.30	11.0	16.7	22.2	27.8
.89	10 11/16	3.04	4.37	5.72	8.44	11.2	17.0	22.6	28.3
.90	10 13/16	3.09	4.45	5.82	8.59	11.4	17.2	23.0	28.7
.91	10 15/16	3.15	4.53	5.92	8.73	11.6	17.5	23.4	29.2
.92	11 1/16	3.20	4.60	6.02	8.88	11.7	17.8	23.8	29.7
.93	11 3/16	3.26	4.68	6.13	9.03	11.9	18.1	24.2	30.2
.94	11 1/4	3.32	4.76	6.23	9.17	12.1	18.4	24.5	30.7
.95	11 3/8	3.37	4.84	6.33	9.32	12.3	18.7	24.9	31.2
.96	11 1/2	3.43	4.92	6.44	9.48	12.5	19.0	25.3	31.7
.97	11 5/8	3.49	5.00	6.55	9.62	12.7	19.3	25.7	32.2
.98	11 3/4	3.55	5.09	6.64	9.78	12.9	19.6	26.1	32.7
.99	11 7/8	3.61	5.17	6.75	9.93	13.1	19.9	26.5	33.2
1.00	12	3.67	5.25	6.86	10.1	13.3	20.2	26.9	33.7
1.01	12 1/8	------	5.33	6.96	10.2	13.5	20.5	27.3	34.2
1.02	12 1/4	------	5.42	7.07	10.4	13.7	20.8	27.7	34.7
1.03	12 3/8	------	5.50	7.18	10.6	13.9	21.1	28.2	35.2
1.04	12 1/2	------	5.59	7.29	10.7	14.2	21.4	28.6	35.7
1.05	12 5/8	------	5.67	7.40	10.9	14.4	21.7	29.0	36.2
1.06	12 3/4	------	5.76	7.51	11.0	14.6	22.0	29.4	36.7
1.07	12 13/16	------	5.84	7.62	11.2	14.8	22.4	29.8	37.3
1.08	12 15/16	------	5.93	7.73	11.4	15.0	22.7	30.2	37.8
1.09	13 1/16	------	6.02	7.84	11.5	15.2	23.0	30.6	38.3
1.10	13 3/16	------	6.11	7.96	11.7	15.4	23.3	31.1	38.8
1.11	13 5/16	------	6.20	8.07	11.8	15.6	23.6	31.5	39.4
1.12	13 7/16	------	6.29	8.18	12.0	15.8	23.9	31.9	39.9
1.13	13 9/16	------	6.38	8.29	12.2	16.0	24.3	32.4	40.4
1.14	13 11/16	------	6.47	8.41	12.3	16.3	24.6	32.8	41.0
1.15	13 13/16	------	6.56	8.53	12.5	16.5	24.9	33.2	41.5
1.16	13 15/16	------	6.65	8.65	12.7	16.7	25.2	33.6	42.1
1.17	14 1/16	------	6.74	8.76	12.8	16.9	25.6	34.1	42.6
1.18	14 3/16	------	6.83	8.88	13.0	17.2	25.9	34.5	43.2
1.19	14 1/4	------	6.93	9.00	13.2	17.4	26.2	35.0	43.7

See note at end of table.

Table 9-11.--Discharge values for trapezoidal or Cipolletti weirs with complete contractions--continued

Head, H[1]		Discharge, Q, for crest length, L, of—							
		1 foot	1.5 feet	2 feet	3 feet	4 feet	6 feet	8 feet	10 feet
Feet	*Inches*	*Second-feet*	*Second-feet*	*Second-feet*	*Second-feet*	*Second-feet*	*Second-feet*	*Second-feet*	*Second-feet*
1.20	14⅜	------	7.02	9.12	13.4	17.6	26.6	35.4	44.3
1.21	14½	------	7.11	9.24	13.5	17.8	26.9	35.8	44.8
1.22	14⅝	------	7.20	9.36	13.7	18.0	27.2	36.3	45.4
1.23	14¾	------	7.30	9.48	13.9	18.3	27.6	36.7	45.9
1.24	14⅞	------	7.40	9.60	14.0	18.5	27.9	37.2	46.5
1.25	15	------	7.49	9.72	14.2	18.7	28.2	37.6	47.1
1.26	15⅛	------	--------	--------	14.4	19.0	28.6	38.1	47.6
1.27	15¼	------	--------	--------	14.6	19.2	28.9	38.5	48.2
1.28	15⅜	------	--------	--------	14.7	19.4	29.3	39.0	48.8
1.29	15½	------	--------	--------	14.9	19.6	29.6	39.5	49.3
1.30	15⅝	------	--------	----------	15.1	19.9	29.9	39.9	49.9
1.31	15¾	------	--------	----------	15.3	20.1	30.3	40.4	50.5
1.32	15 13/16	------	--------	----------	15.5	20.3	30.6	40.8	51.1
1.33	15 15/16	------	--------	----------	15.6	20.6	31.0	41.3	51.6
1.34	16 1/16	------	--------	----------	15.8	20.8	31.3	41.8	52.2
1.35	16 3/16	------	--------	----------	16.0	21.1	31.7	42.2	52.8
1.36	16 5/16	------	--------	----------	16.2	21.3	32.0	42.7	53.4
1.37	16 7/16	------	--------	----------	16.4	21.5	32.4	43.2	54.0
1.38	16 9/16	------	--------	----------	16.6	21.8	32.7	43.7	54.6
1.39	16 11/16	------	--------	----------	16.8	22.0	33.1	44.1	55.2
1.40	16 13/16	------	--------	----------	16.9	22.3	33.5	44.6	55.8
1.41	16 15/16	------	--------	----------	17.1	22.5	33.8	45.1	56.4
1.42	17 1/16	------	--------	----------	17.3	22.8	34.2	45.6	57.0
1.43	17 3/16	------	--------	----------	17.5	23.0	34.6	46.1	57.6
1.44	17¼	------	--------	----------	17.7	23.3	34.9	46.5	58.2
1.45	17⅜	------	--------	--------	17.9	23.5	35.3	47.0	58.8
1.46	17½	------	--------	--------	18.1	23.8	35.6	47.5	59.4
1.47	17⅝	------	--------	--------	18.3	24.0	36.0	48.0	60.0
1.48	17¾	------	--------	--------	18.5	24.3	36.4	48.5	60.6
1.49	17⅞	------	--------	--------	18.7	24.5	36.7	49.0	61.2
1.50	18	------	--------	--------	18.9	24.8	37.1	49.5	61.8

[1] Values of discharge for heads up to 0.20 foot (crest lengths 1, 1.5, 2, 3, and 4 feet) do not follow the formula but are taken directly from the calibration curve. The discharge for heads 0.10 to 1.5 feet for the 6-, 8,- and 10-foot weirs are as computed by the formula $Q=3.367LH^{3/2}$.

Note: Table taken from Parshall, R. L. Measuring Water in Irrigation Channels, U.S. Dept. Agr. Cir. 843, 12-17 p. 1950. (Out of print.)

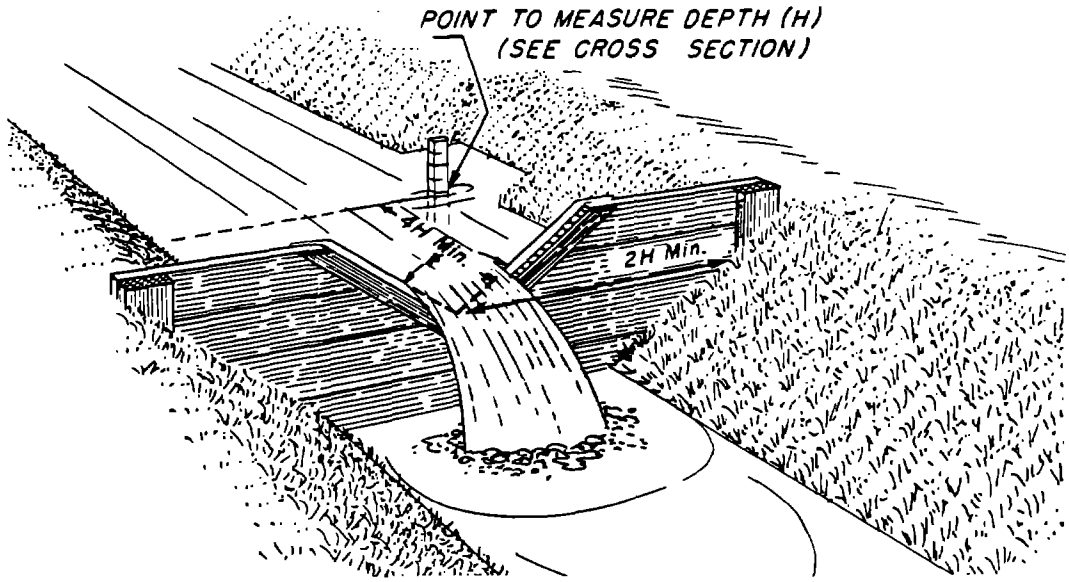

Figure 9-20--Ninety-degree triangular-notch weir

Table 9-12.--Discharge values for 90-degree triangular-notch weirs with complete contractions

Head, *H*		Discharge, *Q*	Head, *H*		Discharge, *Q*	Head, *H*		Discharge, *Q*
Feet	*Inches*	*Second-feet*	*Feet*	*Inches*	*Second-feet*	*Feet*	*Inches*	*Second-feet*
0.15	1 13/16	0.022	0.55	6 3/8	0.564	0.95	11 3/8	2.19
.16	1 15/16	.025	.56	6 3/4	.590	.96	11 1/2	2.25
.17	2 1/16	.029	.57	6 13/16	.617	.97	11 5/8	2.31
.18	2 3/16	.034	.58	6 15/16	.644	.98	11 3/4	2.37
.19	2 1/4	.040	.59	7 1/16	.672	.99	11 7/8	2.43
.20	2 3/8	.046	.60	7 3/16	.700	1.00	12	2.49
.21	2 1/2	.052	.61	7 5/16	.730	1.01	12 1/8	2.55
.22	2 5/8	.058	.62	7 7/16	.760	1.02	12 1/4	2.61
.23	2 3/4	.065	.63	7 9/16	.790	1.03	12 3/8	2.68
.24	2 7/8	.072	.64	7 11/16	.822	1.04	12 1/2	2.74
.25	3	.080	.65	7 13/16	.854	1.05	12 5/8	2.81
.26	3 1/8	.088	.66	7 15/16	.887	1.06	12 3/4	2.87
.27	3 1/4	.096	.67	8 1/16	.921	1.07	12 13/16	2.94
.28	3 3/8	.105	.68	8 3/16	.955	1.08	12 15/16	3.01
.29	3 1/2	.115	.69	8 1/4	.991	1.09	13 1/16	3.08
.30	3 5/8	.125	.70	8 3/8	1.03	1.10	13 3/16	3.15
.31	3 3/4	.136	.71	8 1/2	1.06	1.11	13 5/16	3.22
.32	3 15/16	.147	.72	8 5/8	1.10	1.12	13 7/16	3.30
.33	3 15/16	.159	.73	8 3/4	1.14	1.13	13 9/16	3.37
.34	4 1/16	.171	.74	8 7/8	1.18	1.14	13 11/16	3.44
.35	4 3/16	.184	.75	9	1.22	1.15	13 13/16	3.52
.36	4 5/16	.197	.76	9 1/8	1.26	1.16	13 15/16	3.59
.37	4 7/16	.211	.77	9 1/4	1.30	1.17	14 1/16	3.67
.38	4 9/16	.225	.78	9 3/8	1.34	1.18	14 3/16	3.75
.39	4 11/16	.240	.79	9 1/2	1.39	1.19	14 1/4	3.83
.40	4 13/16	.256	.80	9 5/8	1.43	1.20	14 3/8	3.91
.41	4 15/16	.272	.81	9 3/4	1.48	1.21	14 1/2	3.99
.42	5 1/16	.289	.82	9 13/16	1.52	1.22	14 5/8	4.07
.43	5 3/16	.306	.83	9 15/16	1.57	1.23	14 3/4	4.16
.44	5 1/4	.324	.84	10 1/16	1.61	1.24	14 7/8	4.24
.45	5 3/8	.343	.85	10 3/16	1.66	1.25	15	4.33
.46	5 1/2	.362	.86	10 5/16	1.71	1.26	15 1/8	4.42
.47	5 5/8	.382	.87	10 7/16	1.76	1.27	15 1/4	4.51
.48	5 3/4	.403	.88	10 9/16	1.81	1.28	15 3/8	4.60
.49	5 7/8	.424	.89	10 11/16	1.86	1.29	15 1/2	4.69
.50	6	.445	.90	10 13/16	1.92	1.30	15 5/8	4.78
.51	6 1/8	.468	.91	10 15/16	1.97	1.31	15 3/4	4.87
.52	6 1/4	.491	.92	11 1/16	2.02	1.32	15 13/16	4.96
.53	6 3/8	.515	.93	11 3/16	2.08	1.33	15 15/16	5.06
.54	6 1/2	.539	.94	11 1/4	2.13	1.34	16 1/16	5.15

Note: Table taken from Parshall, R. L. Measuring Water in Irrigation Channels, U.S. Dept. Agr. Cir. 843, 18-19 p. 1950. (Out of print.)

The construction and placement of weirs.--The following general rules should be observed in the construction and installation of contracted weirs.

1. A weir should be set at right angles to the direction of flow in a channel that is straight for a distance upstream from the weir at least ten times the length of the weir crest.
2. The crest and sides of the weir should be straight and sharp-edged. The crest of the rectangular and Cippoletti weirs should be level between the end points, and the sides should be set at exactly the proper angle with the crest. Each side of the triangular-notch weir should make a 45° angle with a vertical line through the vertex of the notch.
3. The ditch upstream should be sufficiently large so the water will approach the weir in a smooth stream, free from eddies, with a mean velocity not exceeding 0.3 foot per second.
4. Restrictions in the channel below the weir that would cause submergence should be avoided. The crest must be placed higher than the maximum downstream water surface to allow air to enter below the nappe.

Limitations in the use of weirs.--Although weirs are easy to construct and and convenient to use they are not always suitable. They are not accurate unless proper conditions for weir measurements are maintained. They require a considerable loss of head, often not available in ditches on flat grades. They are not easily combined with turnout structures, and finally they are not well adapted for water carrying silt which deposits in the channel of approach and destroys the proper conditions for accurate measurement.

Parshall Flumes

The Parshall measuring flume adapts the Venturi principle to the measurement of flow in open channels. The flume consists of three principal sections: (1) A converging or contracting section at its upstream end leading to (2) a constricted section or throat, and (3) a diverging or expanding section downstream (fig. 9-21). The larger-size flumes have an approach floor and wing walls at the upstream end. The floor of the converging section is level, both longitudinally and transversely. The floor of the throat inclines downward, and the floor of the diverging section slopes upward.

The Parshall flume can be constructed in a wide range of sizes to measure discharges from a very small fraction of a second-foot up to more than 3,000 second-feet. The width of the throat (W) is used to designate the size of the flume. The smaller-size flumes, with throat widths of 1 to 3 inches, are used by technicians engaged in water-use studies and by farmers and ranchers concerned with the measurement of small flows of from 0.01 to 0.60 second-foot. Construction and installation tolerances for these small-size flumes are highly critical and must be carefully controlled to assure satisfactory measurement. Intermediate-size flumes with throat widths of from 6 inches to 8 feet are especially suited to

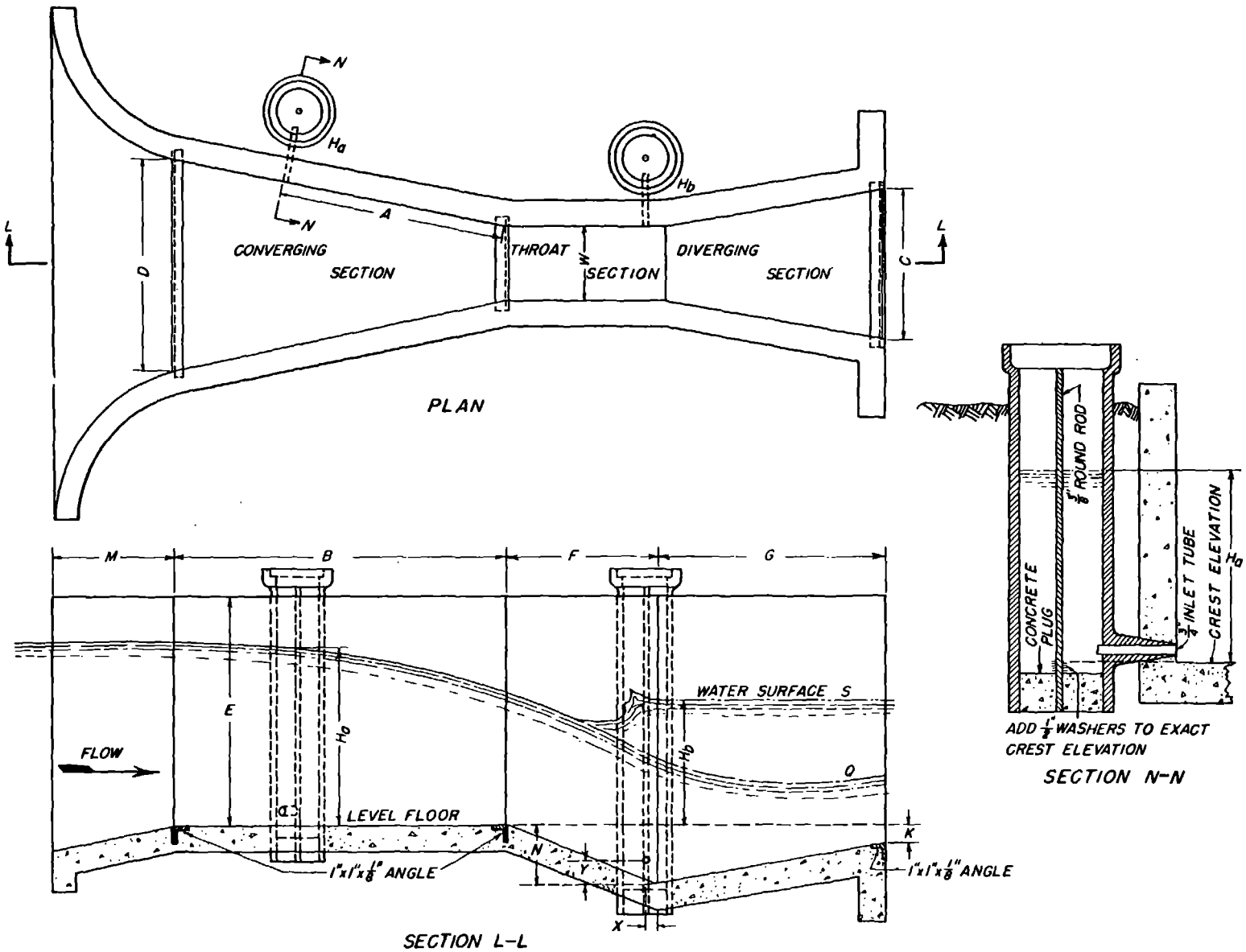

Figure 9-21--Plan and elevation of a concrete Parshall measuring flume showing component parts

the measurement of farm deliveries and the flow in relatively small streams. Their capacity range is 0.50 to 130 second-feet. The larger-size flumes with throat width of 10 to 50 feet are adapted to the measurement of streamflows of 10 to more than 3,000 second-feet.

The size of flume utilized will depend on the range of discharges to be measured. The ranges of discharges and appropriate standard dimensions for various throat widths are shown in table 9-13. The lettered columns of the table refer to the dimensions similarly identified in figure 9-21.

Discharge through the Parshall measuring flume can occur under either of two different conditions of flow: (1) Where there is no submergence, a condition called free flow, and (2) where the elevation of the water surface downstream from the flume is high enough to retard the rate of discharge, a condition called submerged flow. To determine the rate of discharge, two depth gages, (H_a and H_b) are provided (fig. 9-21). Both gages are set with zero points at the mean elevation of the crest of the flume.

When the correct relation between throat width and discharge is chosen, the velocity of approach is automatically controlled. This control is accomplished by selecting a throat wide enough to accommodate the maximum flow to be measured yet narrow enough to cause an increase in the depth of flow upstream. The result is a larger cross-sectional area of the approaching stream and hence a reduction in velocity.

A distinct advantage of the Parshall flume is its ability to operate as a single-head device with a minimum loss of head. This ability permits its use in relatively shallow channels with flat grades. For a given discharge, the loss in head through a Parshall flume is only about one-fourth that required by a weir under similar free-flow conditions.

Free flow is the condition under which the rate of discharge is dependent solely on the length of crest and the depth of water at the gage point H_a, in the converging section, this being similar to a weir where only the length of crest and head are involved in computing the discharge. One of the important characteristics of the Parshall measuring flume is its ability to withstand a relatively high degree of submergence, over a wide range of backwater conditions downstream from the structure, without reduction in the indicated rate of free flow. The stream passing through the throat and diverging sections of the flume can flow at two different stages: (1) When the water at high velocity moves in a thin sheet conforming closely to the dip at the lower end of the throat (indicated by Q in fig. 9-21), and (2) when the backwater raises the water surface to elevation S, causing a ripple or wave to form at or just downstream from the end of the throat.

Table 9-13.--Dimensions and capabilities of the Parshall measuring flume for various throat widths (W)

(Letters refer to dimensions. See fig. 9-21.)

Width	A		B		C		D		E		F	
	Ft.	In.	Ft.	In.	Ft.	In.	Ft.	In.	Ft.	In.	Ft.	In.
Small												
1-inch....	0	9-17/32	1	2	0	3-21/32	0	6-19/32	0	9	0	3
2-inch....	0	10-7/8	1	4	0	5-5/16	0	8-13/32	0	10	0	4-1/2
3-inch....	1	0-1/4	1	6	0	7	0	10-3/16	1	6	0	6
Intermediate												
6-inch....	1	4-5/16	2	0	1	3-1/2	1	3-5/8	2	0	1	0
9-inch....	1	11-1/8	2	10	1	3	1	10-5/8	2	6	1	0
1-foot....	3	0	4	4-7/8	2	0	2	9-1/4	3	0	2	0
1-1/2-foot	3	2	4	7-7/8	2	6	3	4-3/8	3	0	2	0
2-foot....	3	4	4	10-7/8	3	0	3	11-1/2	3	0	2	0
3-foot....	3	8	5	4-3/4	4	0	5	1-7/8	3	0	2	0
4-foot....	4	0	5	10-5/8	5	0	6	4-1/4	3	0	2	0
5-foot....	4	4	6	4-1/2	6	0	7	6-5/8	3	0	2	0
6-foot....	4	8	6	10-3/8	7	0	8	9	3	0	2	0
7-foot....	5	0	7	4-1/4	8	0	9	11-3/8	3	0	2	0
8-foot....	5	4	7	10-1/8	9	0	11	1-3/4	3	0	2	0
Large												
10-foot...	6	0	14	0	12	0	15	7-1/4	4	0	3	0
12-foot...	6	8	16	0	14	8	18	4-3/4	5	0	3	0
15-foot...	7	8	25	0	18	4	25	0	6	0	4	0
20-foot...	9	4	25	0	24	0	30	0	7	0	6	0

Width	G		K	N		X	Y	Free-flow capacity	
								Minimum	Maximum
	Ft.	In.	In.	Ft.	In.	In.	In.	Sec.-Ft.	Sec.-Ft.
Small									
1-inch....	0	8	3/4	0	1-1/8	5/16	1/2	0.01	0.20
2-inch....	0	10	7/8	0	1-11/16	5/8	1	.02	.50
3-inch....	1	0	1	0	2-1/4	1	1-1/2	.03	1.00
Intermediate									
6-inch....	2	0	3	0	4-1/2	2	3	.05	3.9
9-inch....	1	6	3	0	4-1/2	2	3	.09	8.9
1-foot....	3	0	3	0	9	2	3	.11	16.1
1-1/2-foot	3	0	3	0	9	2	3	.15	24.6
2-foot....	3	0	3	0	9	2	3	.42	33.1
3-foot....	3	0	3	0	9	2	3	.61	50.4
4-foot....	3	0	3	0	9	2	3	1.3	67.9
5-foot....	3	0	3	0	9	2	3	1.6	85.6
6-foot....	3	0	3	0	9	2	3	2.6	103.5
7-foot....	3	0	3	0	9	2	3	3.0	121.4
8-foot....	3	0	3	0	9	2	3	3.5	139.5
Large									
10-foot...	6	0	6	1	1-1/2	12	9	6.0	200.0
12-foot...	8	0	6	1	1-1/2	12	9	8.0	350.0
15-foot...	10	0	9	1	6	12	9	8.0	600.0
20-foot...	12	0	12	2	3	12	9	10.0	1000.0

For this higher stage (S), there occurs a marked reduction in the velocity of the water as it leaves the lower end of the flume. Where the flow is submerged at 60 to 70 percent, the exit velocity is modified, the erosion effect on the bed and banks of the channel is less severe, and the total loss of head through the structure is lessened.

The degree or percentage of submergence is the ratio of the two measured heads, or H_b divided by H_a. Where this ratio does not exceed certain limits, the rate of flow or discharge is not affected by the elevation of the water surface downstream, and a free-flow condition exists. The free-flow limits of the ratio H_b/H_a vary with the widths of the throat and are tabulated as follows:

Width of Throat	Free flow limit of H_b/H_a
1 to 3 inches	0.5
6 to 9 inches	.6
1 to 8 feet	.7
10 to 50 feet	.8

To illustrate the determination of the degree of submergence and rate of discharge, it is assumed that for a 2-foot flume the measured heads (H_a and H_b) are 2.2 and 1.3 feet, respectively. The ratio of H_b to H_a is 1.3 divided by 2.2, or 0.6. Since this value is less than 0.7, free-flow conditions exist, and to find the discharge it is only necessary to use the one measured head H_a. The free-flow discharge for a 2-foot flume operating under a head of 2.2 foot is 27.2 cubic feet per second (table 9-14).

When the ratio of the two heads H_b and H_a exceeds the limit for free-flow conditions, it becomes necessary to apply a negative correction to the free-flow discharge in order to determine the rate of submerged flow.

For throat widths for 1 to 9 inches, the submerged rate of flow can be read directly from one of figures 9-22 through 9-26. To illustrate, it is assumed that for a 6-inch flume, the measured heads H_a and H_b are 1.20 and 1.08 feet respectively. Then the percentages of submergence will be 1.08 divided by 1.20 or 90 percent. From figure 9-25, the submerged flow is 1.80 cubic feet per second.

Table 9-14.--Free-flow discharge values for Parshall measuring flume

Head, H_a (feet)	Discharge, Q, for throat widths, W, of—											
	3 inches	6 inches	9 inches	1 foot	1.5 feet	2 feet	3 feet	4 feet	5 feet	6 feet	7 feet	8 feet
	Second-feet	*Second-feet*	*Second-feet*	*Second-feet*	*Second-feet*	*Second-feet*	*Second-feet*	*Second-feet*	*Second-feet*	*Second-feet*	*Second-feet*	*Second-feet*
0.10	0.028	0.05	0.09	0.11	0.15	-----	-----	-----	-----	-----	-----	-----
.11	.033	.06	.10	.12	.18	-----	-----	-----	-----	-----	-----	-----
.12	.037	.07	.12	.14	.21	-----	-----	-----	-----	-----	-----	----
.13	.042	.08	.14	.16	.24	-----	-----	-----	-----	-----	-----	-----
.14	.047	.09	.15	.18	.27	-----	-----	-----	-----	-----	-----	-----
.15	.053	.10	.17	.20	.30	0.42	0.61	-----	-----	-----	-----	-----
.16	.058	.11	.19	.23	.34	.47	.68	-----	-----	-----	-----	-----
.17	.064	.12	.20	.26	.38	.51	.75	-----	-----	-----	-----	-----
.18	.070	.14	.22	.29	.42	.56	.82	-----	-----	-----	-----	-----
.19	.076	.15	.24	.32	.46	.61	.89	-----	-----	-----	-----	-----
.20	.082	.16	.26	.35	.51	.66	.97	1.26	1.55	-----	-----	-----
.21	.089	.18	.28	.37	.55	.71	1.04	1.36	1.68	-----	-----	-----
.22	.095	.19	.30	.40	.59	.77	1.12	1.47	1.81	-----	-----	-----
.23	.102	.20	.32	.43	.63	.82	1.20	1.58	1.94	-----	-----	-----
.24	.109	.22	.35	.46	.67	.88	1.28	1.69	2.08	-----	-----	-----
.25	.117	.23	.37	.49	.71	.93	1.37	1.80	2.22	2.63	3.02	3.46
.26	.124	.25	.39	.51	.76	.99	1.46	1.91	2.36	2.80	3.25	3.68
.27	.131	.26	.41	.54	.80	1.05	1.55	2.03	2.50	2.97	3.44	3.90
.28	.138	.28	.44	.58	.85	1.11	1.64	2.15	2.65	3.15	3.65	4.13
.29	.146	.29	.46	.61	.90	1.18	1.73	2.27	2.80	3.33	3.85	4.37
.30	.154	.31	.49	.64	.94	1.24	1.82	2.39	2.96	3.52	4.08	4.62
.31	.162	.32	.51	.68	.99	1.30	1.92	2.52	3.12	3.71	4.30	4.88
.32	.170	.34	.54	.71	1.04	1.37	2.02	2.65	3.28	3.90	4.52	5.13
.33	.179	.36	.56	.74	1.09	1.44	2.12	2.78	3.44	4.10	4.75	5.39
.34	.187	.38	.59	.77	1.14	1.50	2.22	2.92	3.61	4.30	4.98	5.66
.35	.196	.39	.62	.80	1.19	1.57	2.32	3.06	3.78	4.50	5.22	5.93
.36	.205	.41	.64	.84	1.25	1.64	2.42	3.20	3.95	4.71	5.46	6.20
.37	.216	.43	.67	.88	1.30	1.72	2.53	3.34	4.13	4.92	5.70	6.48
.38	.222	.45	.70	.92	1.36	1.79	2.64	3.48	4.31	5.13	5.95	6.76
.39	.231	.47	.73	.95	1.41	1.86	2.75	3.62	4.49	5.35	6.20	7.05
.40	.241	.48	.76	.99	1.47	1.93	2.86	3.77	4.68	5.57	6.46	7.34
.41	.250	.50	.78	1.03	1.53	2.01	2.97	3.92	4.86	5.80	6.72	7.64
.42	.260	.52	.81	1.07	1.58	2.09	3.08	4.07	5.05	6.02	6.98	7.94
.43	.269	.54	.84	1.11	1.64	2.16	3.29	4.22	5.24	6.25	7.25	8.24
.44	.279	.56	.87	1.15	1.70	2.24	3.32	4.38	5.43	6.48	7.52	8.55
.45	.289	.58	.90	1.19	1.76	2.32	3.44	4.54	5.63	6.72	7.80	8.87
.46	.299	.61	.94	1.23	1.82	2.40	3.56	4.70	5.83	6.96	8.08	9.19
.47	.309	.63	.97	1.27	1.88	2.48	3.68	4.86	6.03	7.20	8.36	9.51
.48	.319	.65	1.00	1.31	1.94	2.57	3.80	5.03	6.24	7.44	8.65	9.84
.49	.329	.67	1.03	1.35	2.00	2.65	3.92	5.20	6.45	7.69	8.94	10.2
.50	.339	.69	1.06	1.39	2.06	2.73	4.05	5.36	6.66	7.94	9.23	10.5
.51	.350	.71	1.10	1.44	2.13	2.82	4.18	5.53	6.87	8.20	9.53	10.9
.52	.361	.73	1.13	1.48	2.19	2.90	4.31	5.70	7.09	8.46	9.83	11.2
.53	.371	.76	1.16	1.52	2.25	2.99	4.44	5.88	7.30	8.72	10.1	11.5
.54	.382	.78	1.20	1.57	2.32	3.08	4.57	6.05	7.52	8.98	10.5	11.9
.55	.393	.80	1.23	1.62	2.39	3.17	4.70	6.23	7.74	9.25	10.8	12.2
.56	.404	.82	1.26	1.66	2.45	3.26	4.84	6.41	7.97	9.52	11.1	12.6
.57	.415	.85	1.30	1.70	2.52	3.35	4.98	6.59	8.20	9.79	11.4	13.0
.58	.427	.87	1.33	1.75	2.59	3.44	5.11	6.77	8.43	10.1	11.7	13.3
.59	.438	.89	1.37	1.80	2.66	3.53	5.25	6.96	8.66	10.4	12.0	13.7

See note at end of table.

Table 9-14.--Free-flow discharge values for Parshall measuring flume--continued

Head, H_a (feet)	Discharge, Q, for throat widths, W, of—											
	3 inches	6 inches	9 inches	1 foot	1.5 feet	2 feet	3 feet	4 feet	5 feet	6 feet	7 feet	8 feet
	Second-feet	*Second-feet*	*Second-feet*	*Second-feet*	*Second-feet*	*Second-feet*	*Second-feet*	*Second-feet*	*Second-feet*	*Second-feet*	*Second-feet*	*Second-feet*
0.60	0.450	0.92	1.40	1.84	2.73	3.62	5.39	7.15	8.89	10.6	12.4	14.1
.61	.462	.94	1.44	1.88	2.80	3.72	5.53	7.34	9.13	10.9	12.7	14.5
.62	.474	.97	1.48	1.93	2.87	3.81	5.68	7.53	9.37	11.2	13.0	14.8
.63	.485	.99	1.51	1.98	2.95	3.91	5.82	7.72	9.61	11.5	13.4	15.2
.64	.497	1.02	1.55	2.03	3.02	4.01	5.97	7.91	9.85	11.8	13.7	15.6
.65	.509	1.04	1.59	2.08	3.09	4.11	6.12	8.11	10.1	12.1	14.1	16.0
.66	.522	1.07	1.63	2.13	3.17	4.20	6.26	8.31	10.3	12.4	14.4	16.4
.67	.534	1.10	1.66	2.18	3.24	4.30	6.41	8.51	10.6	12.7	14.8	16.8
.68	.546	1.12	1.70	2.23	3.31	4.40	6.56	8.71	10.8	13.0	15.1	17.2
.69	.558	1.15	1.74	2.28	3.39	4.50	6.71	8.91	11.1	13.3	15.5	17.6
.70	.571	1.17	1.78	2.33	3.46	4.60	6.86	9.11	11.4	13.6	15.8	18.0
.71	.584	1.20	1.82	2.38	3.54	4.70	7.02	9.32	11.6	13.9	16.2	18.5
.72	.597	1.23	1.86	2.43	3.62	4.81	7.17	9.53	11.9	14.2	16.6	18.9
.73	.610	1.26	1.90	2.48	3.69	4.91	7.33	9.74	12.1	14.5	16.9	19.3
.74	.623	1.28	1.94	2.53	3.77	5.02	7.49	9.95	12.4	14.9	17.3	19.7
.75	.636	1.31	1.98	2.58	3.85	5.12	7.65	10.2	12.7	15.2	17.7	20.1
.76	.649	1.34	2.02	2.63	3.93	5.23	7.81	10.4	12.9	15.5	18.0	20.6
.77	.662	1.36	2.06	2.68	4.01	5.34	7.97	10.6	13.2	15.8	18.4	21.0
.78	.675	1.39	2.10	2.74	4.09	5.44	8.13	10.8	13.5	16.2	18.8	21.5
.79	.689	1.42	2.14	2.80	4.17	5.55	8.30	11.0	13.8	16.5	19.2	21.9
.80	.702	1.45	2.18	2.85	4.26	5.66	8.46	11.3	14.0	16.8	19.6	22.4
.81	.716	1.48	2.22	2.90	4.34	5.77	8.63	11.5	14.3	17.2	20.0	22.8
.82	.730	1.50	2.27	2.96	4.42	5.88	8.79	11.7	14.6	17.5	20.4	23.3
.83	.744	1.53	2.31	3.02	4.50	6.00	8.96	11.9	14.9	17.8	20.8	23.7
.84	.757	1.56	2.35	3.07	4.59	6.11	9.13	12.2	15.2	18.2	21.2	24.2
.85	.771	1.59	2.39	3.12	4.67	6.22	9.30	12.4	15.5	18.5	21.6	24.6
.86	.786	1.62	2.44	3.18	4.76	6.33	9.48	12.6	15.8	18.9	22.0	25.1
.87	.800	1.65	2.48	3.24	4.84	6.44	9.65	12.8	16.0	19.2	22.4	25.6
.88	.814	1.68	2.52	3.29	4.93	6.56	9.82	13.1	16.3	19.6	22.8	26.1
.89	.828	1.71	2.57	3.35	5.01	6.68	10.0	13.3	16.6	19.9	23.2	26.5
.90	.843	1.74	2.61	3.41	5.10	6.80	10.2	13.6	16.9	20.3	23.7	27.0
.91	.858	1.77	2.66	3.46	5.19	6.92	10.4	13.8	17.2	20.7	24.1	27.5
.92	.872	1.81	2.70	3.52	5.28	7.03	10.5	14.0	17.5	21.0	24.5	28.0
.93	.887	1.84	2.75	3.58	5.37	7.15	10.7	14.3	17.8	21.4	24.9	28.5
.94	.902	1.87	2.79	3.64	5.46	7.27	10.9	14.5	18.1	21.8	25.4	29.0
.95	.916	1.90	2.84	3.70	5.55	7.39	11.1	14.8	18.4	22.1	25.8	29.5
.96	.931	1.93	2.88	3.76	5.64	7.51	11.3	15.0	18.8	22.5	26.2	30.0
.97	.946	1.97	2.93	3.82	5.73	7.63	11.4	15.3	19.1	22.9	26.7	30.5
.98	.961	2.00	2.98	3.88	5.82	7.75	11.6	15.5	19.4	23.2	27.1	31.0
.99	.977	2.03	3.02	3.94	5.91	7.88	11.8	15.8	19.7	23.6	27.6	31.5
1.00	.992	2.06	3.07	4.00	6.00	8.00	12.0	16.0	20.0	24.0	28.0	32.0
1.01	1.01	2.09	3.12	4.06	6.09	8.12	12.2	16.3	20.3	24.4	28.5	32.5
1.02	1.02	2.12	3.17	4.12	6.19	8.25	12.4	16.5	20.6	24.8	28.9	33.0
1.03	1.04	2.16	3.21	4.18	6.28	8.38	12.6	16.8	21.0	25.2	29.4	33.6
1.04	1.05	2.19	3.26	4.25	6.37	8.50	12.8	17.0	21.3	25.6	29.8	34.1
1.05	1.07	2.22	3.31	4.31	6.47	8.63	13.0	17.3	21.6	25.9	30.3	34.6
1.06	1.09	2.26	3.36	4.37	6.56	8.76	13.2	17.5	21.9	26.3	30.7	35.1
1.07	1.10	2.29	3.40	4.43	6.66	8.88	13.3	17.8	22.3	26.7	31.2	35.7
1.08	1.12	2.32	3.45	4.50	6.75	9.01	13.5	18.1	22.6	27.1	31.7	36.2
1.09	1.13	2.36	3.50	4.56	6.85	9.14	13.7	18.3	22.9	27.5	32.1	36.8

See note at end of table.

Table 9-14.--Free-flow discharge values for Parshall measuring flume--continued

Head, H_a (feet)	Discharge, Q, for throat widths, W, of—											
	3 inches	6 inches	9 inches	1 foot	1.5 feet	2 feet	3 feet	4 feet	5 feet	6 feet	7 feet	8 feet
	Second-feet	*Second-feet*	*Second-feet*	*Second-feet*	*Second-feet*	*Second-feet*	*Second-feet*	*Second-feet*	*Second-feet*	*Second-feet*	*Second-feet*	*Second-feet*
1.10	1.15	2.40	3.55	4.62	6.95	9.27	13.9	18.6	23.3	27.9	32.6	37.3
1.11	1.16	2.43	3.60	4.68	7.04	9.40	14.1	18.9	23.6	28.4	33.1	37.8
1.12	1.18	2.46	3.65	4.75	7.14	9.54	14.3	19.1	23.9	28.8	33.6	38.4
1.13	1.20	2.50	3.70	4.82	7.24	9.67	14.5	19.4	24.3	29.2	34.1	38.9
1.14	1.21	2.53	3.75	4.88	7.34	9.80	14.7	19.7	24.6	29.6	34.5	39.5
1.15	1.22	2.57	3.80	4.94	7.44	9.94	14.9	19.9	25.0	30.0	35.0	40.1
1.16	1.25	2.60	3.85	5.01	7.54	10.1	15.1	20.2	25.3	30.4	35.5	40.6
1.17	1.26	2.64	3.90	5.08	7.64	10.2	15.3	20.5	25.7	30.8	36.0	41.2
1.18	1.28	2.68	3.95	5.15	7.74	10.3	15.6	20.8	26.0	31.3	36.5	41.8
1.19	1.30	2.71	4.01	5.21	7.84	10.5	15.8	21.1	26.4	31.7	37.0	42.3
1.20	1.32	2.75	4.06	5.28	7.94	10.6	16.0	21.3	26.7	32.1	37.5	42.9
1.21	1.33	2.78	4.11	5.34	8.05	10.8	16.2	21.6	27.1	32.5	38.0	43.5
1.22	1.35	2.82	4.16	5.41	8.15	10.9	16.4	21.9	27.4	33.0	38.5	44.1
1.23	1.37	2.86	4.22	5.48	8.25	11.0	16.6	22.2	27.8	33.4	39.0	44.6
1.24	1.38	2.89	4.27	5.55	8.36	11.2	16.8	22.5	28.1	33.8	39.5	45.2
1.25	1.40	2.93	4.32	5.62	8.46	11.3	17.0	22.8	28.5	34.3	40.0	45.8
1.26	1.42	2.97	4.37	5.69	8.56	11.5	17.2	23.0	28.9	34.7	40.5	46.4
1.27	1.44	3.01	4.43	5.76	8.67	11.6	17.4	23.3	29.2	35.1	41.1	47.0
1.28	1.45	3.04	4.48	5.82	8.77	11.7	17.7	23.6	29.6	35.6	41.6	47.6
1.29	1.47	3.08	4.53	5.89	8.88	11.9	17.9	23.9	30.0	36.0	42.1	48.2
1.30	1.49	3.12	4.59	5.96	8.99	12.0	18.1	24.2	30.3	36.5	42.6	48.8
1.31	1.50	3.16	4.64	6.03	9.09	12.2	18.3	24.5	30.7	36.9	43.1	49.4
1.32	1.52	3.19	4.69	6.10	9.20	12.3	18.5	24.8	31.1	37.4	43.7	50.0
1.33	1.54	3.23	4.75	6.18	9.30	12.4	18.8	25.1	31.4	37.8	44.2	50.6
1.34	1.56	3.27	4.80	6.25	9.41	12.6	19.0	25.4	31.8	38.3	44.7	51.2
1.35	1.58	3.31	4.86	6.32	9.52	12.7	19.2	25.7	32.2	38.7	45.3	51.8
1.36	1.59	3.35	4.92	6.39	9.63	12.9	19.4	26.0	32.6	39.2	45.8	52.5
1.37	1.61	3.39	4.97	6.46	9.74	13.0	19.6	26.3	33.0	39.7	46.4	53.1
1.38	1.63	3.43	5.03	6.53	9.85	13.2	19.9	26.6	33.3	40.1	46.9	53.7
1.39	1.65	3.47	5.08	6.60	9.96	13.3	20.1	26.9	33.7	40.6	47.4	54.3
1.40	1.67	3.51	5.14	6.68	10.1	13.5	20.3	27.2	34.1	41.1	48.0	55.0
1.41	1.69	3.55	5.19	6.75	10.2	13.6	20.6	27.5	34.5	41.5	48.5	55.6
1.42	1.70	3.59	5.25	6.82	10.3	13.8	20.8	27.8	34.9	42.0	49.1	56.2
1.43	1.72	3.63	5.31	6.89	10.4	13.9	21.0	28.1	35.3	42.5	49.6	56.9
1.44	1.74	3.67	5.37	6.97	10.5	14.1	21.2	28.5	35.7	42.9	50.2	57.5
1.45	1.76	3.71	5.42	7.04	10.6	14.2	21.5	28.8	36.1	43.4	50.8	58.1
1.46	1.78	3.75	5.48	7.12	10.7	14.4	21.7	29.1	36.5	43.9	51.3	58.8
1.47	1.80	3.79	5.54	7.19	10.8	14.5	21.9	29.4	36.9	44.4	51.9	59.4
1.48	1.82	3.83	5.59	7.26	11.0	14.7	22.2	29.7	37.3	44.9	52.5	60.1
1.49	1.84	3.87	5.65	7.34	11.1	14.9	22.4	30.0	37.7	45.3	53.0	60.7
1.50	1.86	3.91	5.71	7.41	11.2	15.0	22.6	30.3	38.1	45.8	53.6	61.4
1.51	----	----	5.77	7.49	11.3	15.2	22.9	30.7	38.5	46.3	54.2	62.1
1.52	----	----	5.83	7.57	11.4	15.3	23.1	31.0	38.9	46.8	54.7	62.7
1.53	----	----	5.89	7.64	11.5	15.5	23.4	31.3	39.3	47.3	55.3	63.4
1.54	----	----	5.94	7.72	11.7	15.6	23.6	31.6	39.7	47.8	55.9	64.0
1.55	----	----	6.00	7.80	11.8	15.8	23.8	32.0	40.1	48.3	56.5	64.7
1.56	----	----	6.06	7.87	11.9	15.9	24.1	32.3	40.5	48.8	57.1	65.4
1.57	----	----	6.12	7.95	12.0	16.1	24.3	32.6	40.9	49.3	57.7	66.1
1.58	----	----	6.18	8.02	12.1	16.3	24.6	32.9	41.3	49.8	58.2	66.7
1.59	----	----	6.24	8.10	12.2	16.4	24.8	33.3	41.8	50.3	58.8	67.4

See note at end of table.

Table 9-14.--Free-flow discharge values for Parshall measuring flume--continued

Head, H_a (feet)	Discharge, Q, for throat widths, W, of—											
	3 inches	6 inches	9 inches	1 foot	1.5 feet	2 feet	3 feet	4 feet	5 feet	6 feet	7 feet	8 feet
	Second-feet	*Second-feet*	*Second-feet*	*Second-feet*	*Second-feet*	*Second-feet*	*Second-feet*	*Second-feet*	*Second-feet*	*Second-feet*	*Second-feet*	*Second-feet*
1.60	----	----	6.31	8.18	12.4	16.6	25.1	33.6	42.2	50.8	59.4	68.1
1.61	----	----	6.37	8.26	12.5	16.7	25.3	33.9	42.6	51.3	60.0	68.8
1.62	----	----	6.43	8.34	12.6	16.9	25.5	34.3	43.0	51.8	60.6	69.5
1.63	----	----	6.49	8.42	12.7	17.1	25.8	34.6	43.4	52.3	61.2	70.2
1.64	----	----	6.55	8.49	12.8	17.2	26.0	34.9	43.9	52.8	61.8	70.9
1.65	----	----	6.61	8.57	13.0	17.4	26.3	35.3	44.3	53.3	62.4	71.6
1.66	----	----	6.67	8.65	13.1	17.6	26.5	35.6	44.7	53.9	63.0	72.3
1.67	----	----	6.73	8.73	13.2	17.7	26.8	35.9	45.1	54.4	63.6	73.0
1.68	----	----	6.79	8.81	13.3	17.9	27.0	36.3	45.6	54.9	64.3	73.7
1.69	----	----	6.86	8.89	13.5	18.0	27.3	36.6	46.0	55.4	64.9	74.4
1.70	----	----	6.92	8.97	13.6	18.2	27.6	37.0	46.4	56.0	65.5	75.1
1.71	----	----	6.98	9.05	13.7	18.4	27.8	37.3	46.9	56.5	66.1	75.8
1.72	----	----	7.04	9.13	13.8	18.5	28.1	37.7	47.3	57.0	66.7	76.5
1.73	----	----	7.11	9.21	13.9	18.7	28.3	38.0	47.7	57.5	67.3	77.2
1.74	----	----	7.17	9.29	14.1	18.9	28.6	38.3	48.2	58.1	68.0	77.9
1.75	----	----	7.23	9.38	14.2	19.0	28.8	38.7	48.6	58.6	68.6	78.7
1.76	----	----	7.29	9.46	14.3	19.2	29.1	39.0	49.1	59.1	69.2	79.4
1.77	----	----	7.36	9.54	14.4	19.4	29.3	39.4	49.5	59.7	69.9	80.1
1.78	----	----	7.42	9.62	14.6	19.6	29.6	39.7	49.9	60.2	70.5	80.8
1.79	----	----	7.48	9.70	14.7	19.7	29.9	40.1	50.4	60.7	71.1	81.6
1.80	----	----	7.54	9.79	14.8	19.9	30.1	40.5	50.8	61.3	71.8	82.3
1.81	----	----	7.61	9.87	15.0	20.1	30.4	40.8	51.3	61.8	72.4	83.0
1.82	----	----	7.68	9.95	15.1	20.2	30.7	41.2	51.7	62.4	73.0	83.8
1.83	----	----	7.74	10.0	15.2	20.4	30.9	41.5	52.2	62.9	73.7	84.5
1.84	----	----	7.81	10.1	15.3	20.6	31.2	41.9	52.6	63.5	74.3	85.3
1.85	----	----	7.87	10.2	15.5	20.8	31.5	42.2	53.1	64.0	75.0	86.0
1.86	----	----	7.94	10.3	15.6	20.9	31.7	42.6	53.6	64.6	75.6	86.8
1.87	----	----	8.00	10.4	15.7	21.1	32.0	43.0	54.0	65.1	76.3	87.5
1.88	----	----	8.06	10.5	15.8	21.3	32.3	43.3	54.5	65.7	76.9	88.3
1.89	----	----	8.13	10.5	16.0	21.5	32.5	43.7	54.9	66.3	77.6	89.0
1.90	----	----	8.20	10.6	16.1	21.6	32.8	44.1	55.4	66.8	78.2	89.8
1.91	----	----	8.26	10.7	16.2	21.8	33.1	44.4	55.9	67.4	78.9	90.5
1.92	----	----	8.33	10.8	16.4	22.0	33.3	44.8	56.3	67.9	79.6	91.3
1.93	----	----	8.40	10.9	16.5	22.2	33.6	45.2	56.8	68.5	80.2	92.1
1.94	----	----	8.46	11.0	16.6	22.4	33.9	45.5	57.3	69.1	80.9	92.8
1.95	----	----	8.52	11.1	16.7	22.5	34.1	45.9	57.7	69.6	81.6	93.6
1.96	----	----	8.59	11.1	16.9	22.7	34.4	46.3	58.2	70.2	82.2	94.4
1.97	----	----	8.66	11.2	17.0	22.9	34.7	46.6	58.7	70.8	82.9	95.1
1.98	----	----	8.73	11.3	17.2	23.1	35.0	47.0	59.1	71.4	83.6	95.9
1.99	----	----	8.80	11.4	17.3	23.2	35.3	47.4	59.6	71.9	84.3	96.7
2.00	----	----	8.87	11.5	17.4	23.4	35.5	47.8	60.1	72.5	84.9	97.5
2.01	----	----	----	11.6	17.6	23.6	35.8	48.1	60.6	73.1	85.6	98.3
2.02	----	----	----	11.7	17.7	23.8	36.1	48.5	61.0	73.7	86.3	99.1
2.03	----	----	----	11.8	17.8	24.0	36.4	48.9	61.5	74.2	87.0	99.8
2.04	----	----	----	11.8	18.0	24.2	36.7	49.3	62.0	74.8	87.7	100.6
2.05	----	----	----	11.9	18.1	24.3	36.9	49.7	62.5	75.4	88.4	101.4
2.06	----	----	----	12.0	18.2	24.5	37.2	50.1	63.0	76.0	89.1	102.2
2.07	----	----	----	12.1	18.4	24.7	37.5	50.4	63.5	76.6	89.8	103.0
2.08	----	----	----	12.2	18.5	24.9	37.8	50.8	63.9	77.2	90.4	103.8
2.09	----	----	----	12.3	18.7	25.1	38.1	51.2	64.4	77.8	91.1	104.6

See note at end of table.

Table 9-14.--Free-flow discharge values for Parshall measuring flume--continued

Head, H_a (feet)	Discharge, Q, for throat widths, W, of—											
	3 inches	6 inches	9 inches	1 foot	1.5 feet	2 feet	3 feet	4 feet	5 feet	6 feet	7 feet	8 feet
	Second-feet	*Second-feet*	*Second-feet*	*Second-feet*	*Second-feet*	*Second-feet*	*Second-feet*	*Second-feet*	*Second-feet*	*Second-feet*	*Second-feet*	*Second-feet*
2.10	----	----	----	12.4	18.8	25.3	38.4	51.6	64.9	78.4	91.8	105.4
2.11	----	----	----	12.5	18.9	25.5	38.6	52.0	65.4	79.0	92.5	106.2
2.12	----	----	----	12.6	19.0	25.6	38.9	52.4	65.9	79.6	93.3	107.0
2.13	----	----	----	12.6	19.2	25.8	39.2	52.8	66.4	80.2	94.0	107.9
2.14	----	----	----	12.7	19.3	26.0	39.5	53.2	66.9	80.8	94.7	108.7
2.15	----	----	----	12.8	19.5	26.2	39.8	53.5	67.4	81.4	95.4	109.5
2.16	----	----	----	12.9	19.6	26.4	40.1	53.9	67.9	82.0	96.1	110.3
2.17	----	----	----	13.0	19.7	26.6	40.4	54.3	68.4	82.6	96.8	111.1
2.18	----	----	----	13.1	19.9	26.8	40.7	54.7	68.9	83.2	97.5	111.9
2.19	----	----	----	13.2	20.0	27.0	41.0	55.1	69.4	83.8	98.2	112.8
2.20	----	----	----	13.3	20.2	27.2	41.3	55.5	69.9	84.4	98.9	113.6
2.21	----	----	----	13.4	20.3	27.3	41.5	55.9	70.4	85.0	99.7	114.4
2.22	----	----	----	13.5	20.5	27.5	41.8	56.3	70.9	85.6	100.4	115.3
2.23	----	----	----	13.6	20.6	27.7	42.1	56.7	71.4	86.3	101.1	116.1
2.24	----	----	----	13.7	20.7	27.9	42.4	57.1	71.9	86.9	101.8	116.9
2.25	----	----	----	13.7	20.9	28.1	42.7	57.5	72.4	87.5	102.6	117.8
2.26	----	----	----	13.8	21.0	28.3	43.0	57.9	72.9	88.1	103.3	118.6
2.27	----	----	----	13.9	21.2	28.5	43.3	58.3	73.5	88.7	104.0	119.5
2.28	----	----	----	14.0	21.3	28.7	43.6	58.7	74.0	89.4	104.8	120.3
2.29	----	----	----	14.1	21.4	28.9	43.9	59.2	74.5	90.0	105.5	121.2
2.30	----	----	----	14.2	21.6	29.1	44.2	59.6	75.0	90.6	106.2	122.0
2.31	----	----	----	14.3	21.7	29.3	44.5	60.0	75.5	91.2	107.0	122.9
2.32	----	----	----	14.4	21.9	29.5	44.8	60.4	76.1	91.9	107.7	123.7
2.33	----	----	----	14.5	22.0	29.7	45.1	60.8	76.6	92.5	108.5	124.6
2.34	----	----	----	14.6	22.2	29.9	45.4	61.2	77.1	93.1	109.2	125.4
2.35	----	----	----	14.7	22.4	30.1	45.7	61.6	77.6	93.8	110.0	126.3
2.36	----	----	----	14.8	22.5	30.3	46.0	62.0	78.1	94.4	110.7	127.2
2.37	----	----	----	14.9	22.6	30.5	46.4	62.4	78.7	95.1	111.5	128.0
2.38	----	----	----	15.0	22.8	30.7	46.7	62.9	79.2	95.7	112.2	128.9
2.39	----	----	----	15.1	22.9	30.9	47.0	63.3	79.7	96.3	113.0	129.8
2.40	----	----	----	15.2	23.0	31.1	47.3	63.7	80.3	97.0	113.7	130.7
2.41	----	----	----	15.3	23.2	31.3	47.6	64.1	80.8	97.6	114.5	131.5
2.42	----	----	----	15.4	23.3	31.5	47.9	64.5	81.3	98.3	115.3	132.4
2.43	----	----	----	15.5	23.5	31.7	48.2	65.0	81.8	98.9	116.0	133.3
2.44	----	----	----	15.6	23.7	31.9	48.5	65.4	82.4	99.6	116.8	134.2
2.45	----	----	----	15.6	23.8	32.1	48.8	65.8	82.9	100.2	117.6	135.1
2.46	----	----	----	15.7	23.9	32.3	49.1	66.2	83.5	100.9	118.3	135.9
2.47	----	----	----	15.9	24.1	32.5	49.5	66.7	84.0	101.5	119.1	136.8
2.48	----	----	----	15.9	24.2	32.7	49.8	67.1	84.5	102.2	119.9	137.7
2.49	----	----	----	16.0	24.4	32.9	50.1	67.5	85.1	102.8	120.6	138.6
2.50	----	----	----	16.1	24.6	33.1	50.4	67.9	85.6	103.5	121.4	139.5

Note: Table taken from Parshall, R. L. Measuring Water in Irrigation Channels, U.S. Dept. Agr. Cir. 843, 62 p. 1950. (Out of print.) For H_a and W see figure 9-21. To convert decimal fractions to inches see table 9-10.

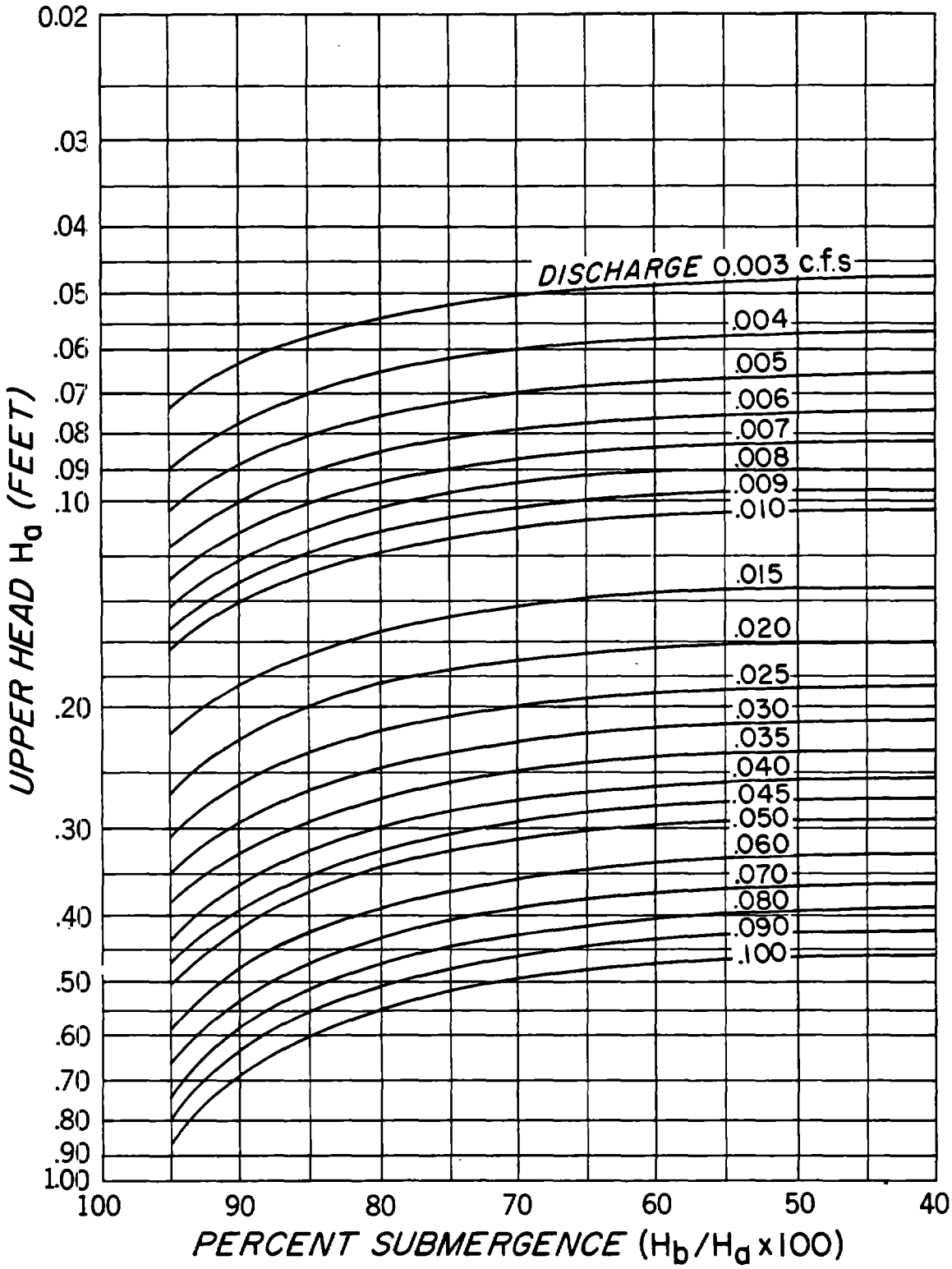

Figure 9-22--Rate of submerged flow through a 1-inch Parshall measuring flume

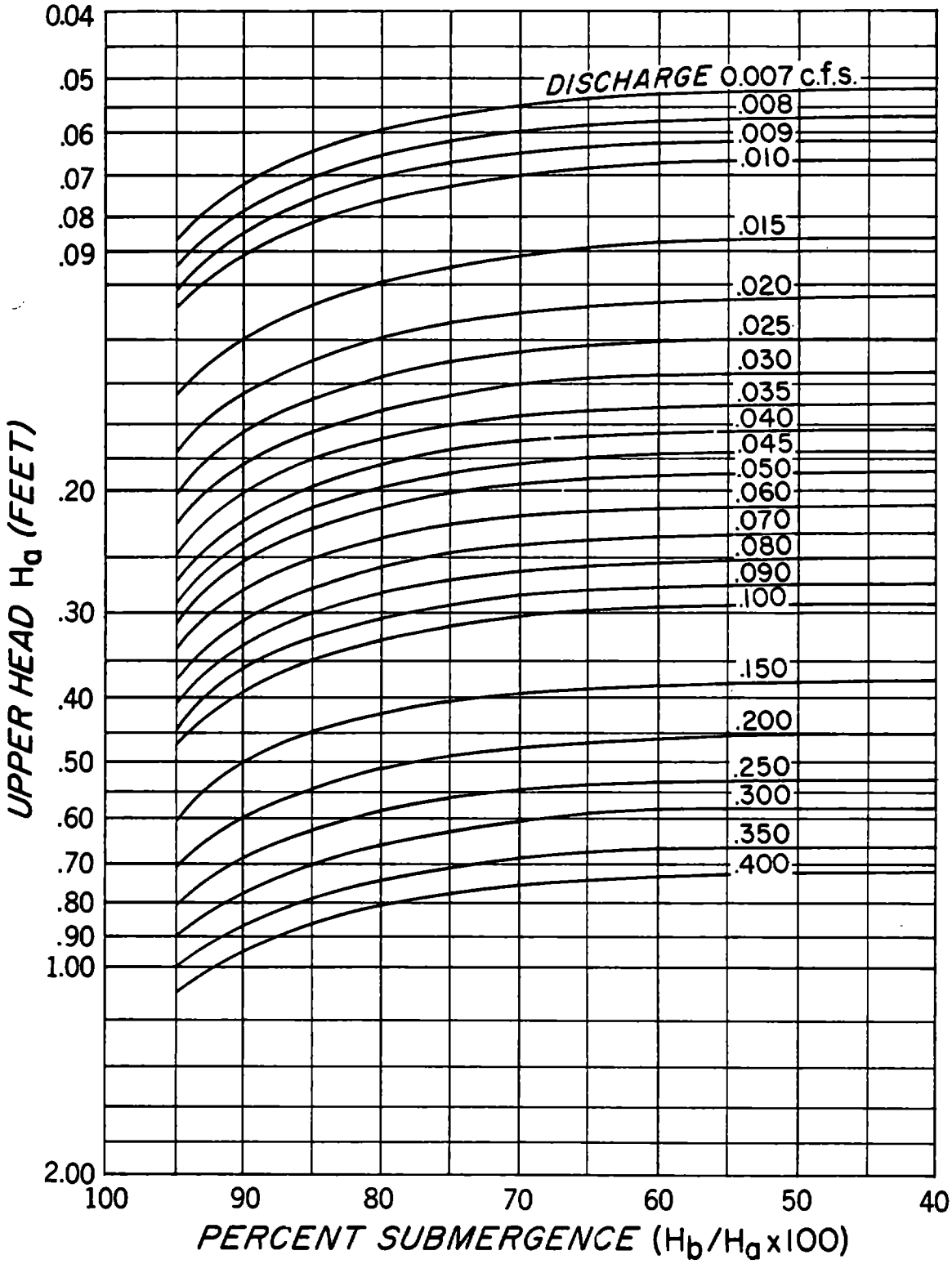

Figure 9-23--Rate of submerged flow through a 2-inch Parshall measuring flume

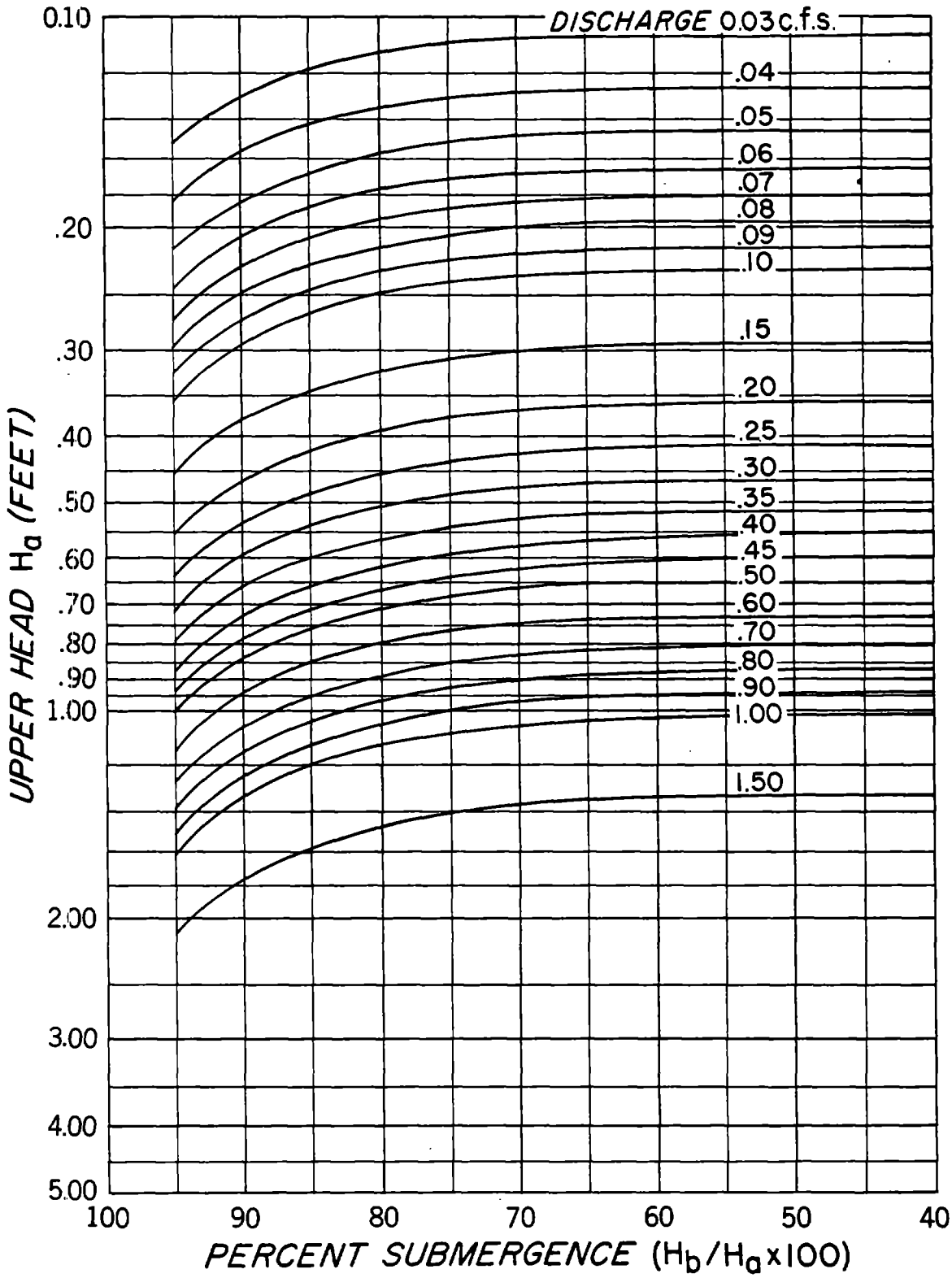

Figure 9-24--Rate of submerged flow through a 3-inch Parshall measuring flume

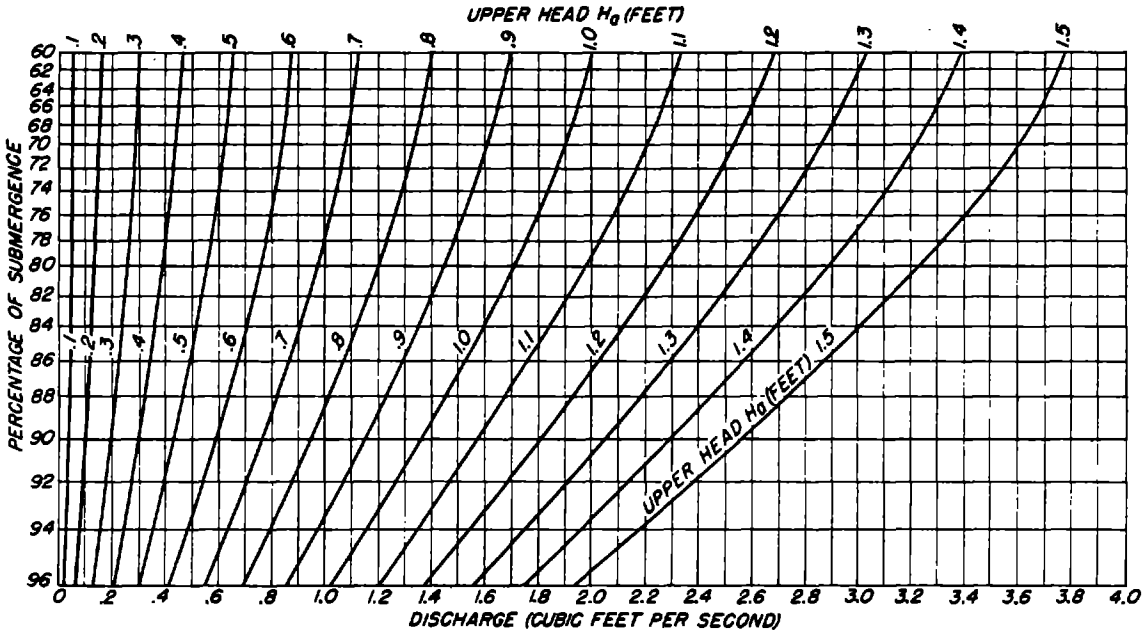

Figure 9-25--Diagram showing the rate of submerged flow, in cubic feet per second, through a 6-inch Parshall measuring flume

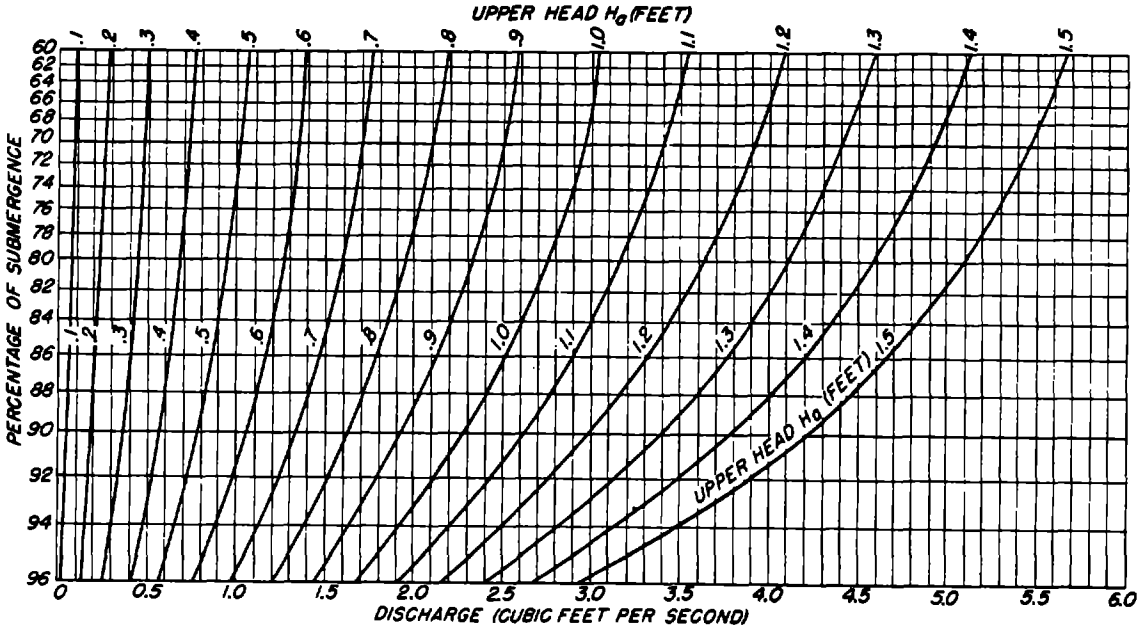

Figure 9-26--Diagram showing the rate of submerged flow, in cubic feet per second, through a 9-inch Parshall measuring flume

For flumes with throat widths between 1 and 8 feet, the submerged discharge is determined by using a correction diagram (fig. 9-27). This diagram is for a 1-foot throat width and is made applicable to the larger flumes by multiplying the correction for a 1-foot flume by the factor (M) for the size of flume in use. This correction is then subtracted from the free-flow discharge for the measured head (H_a), as obtained from table 9-14. The factor M for various throat widths is tabulated as follows:

Throat Width	Multiplying factor (M)
Feet	
1	1.0
1.5	1.4
2	1.8
3	2.4
4	3.1
5	3.7
6	4.3
7	4.9
8	5.4

As an example of the use of the correction diagram, find the submerged discharge through a flume of 3-foot throat width where the measured heads H_a and H_b are 2.1 and 2.0 feet, respectively. The submergence ratio is then 2.0/2.1 or 95 percent. From the correction diagram (fig. 9-27), the correction for a 1-foot throat width is 5.75 cubic feet per second. Since this correction must be made applicable to a 3-foot throat width, multiply it by the applicable value of M, or 2.4, which gives a correction of 13.8 cubic feet per second. From table 9-14, find the free flow from a flume of 3-foot throat width for a head (H_a) equal to 2.1 feet to be 38.4 cubic feet per second. Thus the submerged flow becomes 38.4 - 13.8, or 24.6 cubic feet per second.

For the larger-size flumes (throat widths of 10 to 50 feet), the procedure for determining submerged discharge is the same as that for flumes 1 to 8 feet in throat width. A correction diagram for a 10-foot throat width is used (fig. 9-28). For wider flumes, the multiplying factor (M) is the throat width in feet divided by 10.

For example, find the discharge of a flume with a 25-foot throat width operating under a head (H_a) of 3.25 feet at 94-percent submergence to be:

$$631 - (2.5 \times 53) = 498.5 \text{ cubic feet per second}$$

To operate the Parshall measuring flume as a single head device or at a predetermined degree of submergence for a particular rate of flow, it will be necessary to determine accurately the elevation of the crest with reference to the bed of the channel. Where enough fall is available, this setting may be determined with little difficulty, but if the

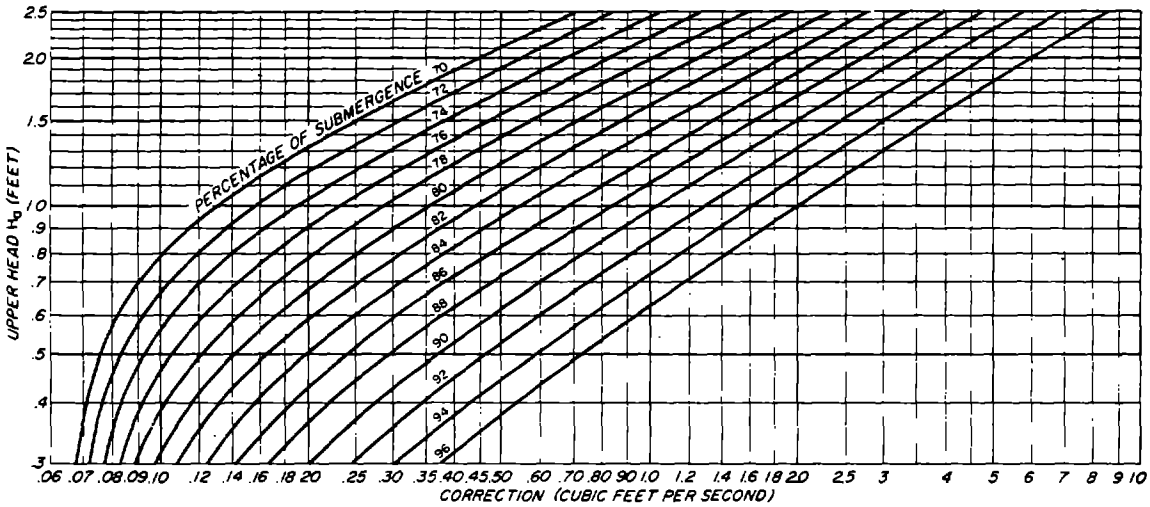

Figure 9-27--Diagram for computing the rate of submerged flow, in cubic feet per second, through a 1-foot Parshall measuring flume

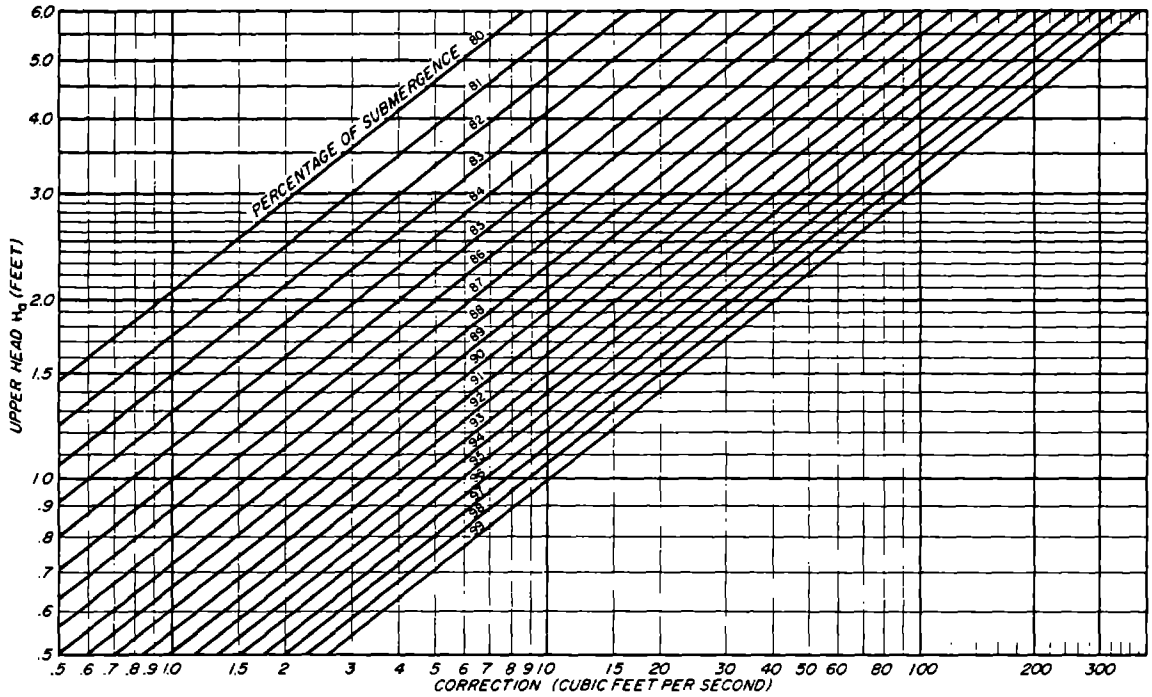

Figure 9-28--Diagram for determining the correction in second-feet per 10 feet of crest for submerged-flow discharge

fall or grade of the channel is slight, care must be taken in fixing the height of the crest so that, if possible, the degree of submergence shall not exceed the limits of free-flow operation, as explained in previous paragraphs. If conditions will not permit free-flow operation, the setting should be so made that minimum submergence will exist.

The selection of the location or site is sometimes important. Generally, it is best to have it conveniently near the point of diversion or regulating gate if conditions of operation require frequent notation of discharge. The flume should not be placed too near the headgate, as the disturbed water just downstream from the outlet may cause surging and unbalanced flow; it had best be in a straight section of the channel.

Following the selection of the site it is necessary to determine the size and proper elevation of the crest. Examples are given below to assist in the problem of size and setting of the measuring flume as covered by general field conditions usually found in irrigation practice. For example: 20 second-feet is to be measured in a channel of moderate grade where the water depth is 2.5 feet. This quantity of flow can be measured through several sizes of flume, but for the sake of economy the smallest practical size should be selected.

First, let it be assumed that a submergence of 70 percent shall not be exceeded in order that the flow may be determined by the single gage reading of H_a.

To meet these requirements three different sizes of flumes and settings will be investigated. First: For a 4-foot flume and a discharge of 20 second-feet, the H_a head is found to be 1.15 feet (table 9-14); for a submergence of 70 percent, the ratio of H_b gage to H_a gage is 0.7; hence H_b for this condition of flow is 0.81 foot. At 70 percent submergence, the water surface in the throat at the H_b gage is essentially level with that at the lower end of the flume. Under this condition of flow, the water depth just below the structure will be approximately the same as before the flume was installed; that is, 2.5 feet. In figure 9-29 the dimension D represents this depth of 2.5 feet. By subtracting

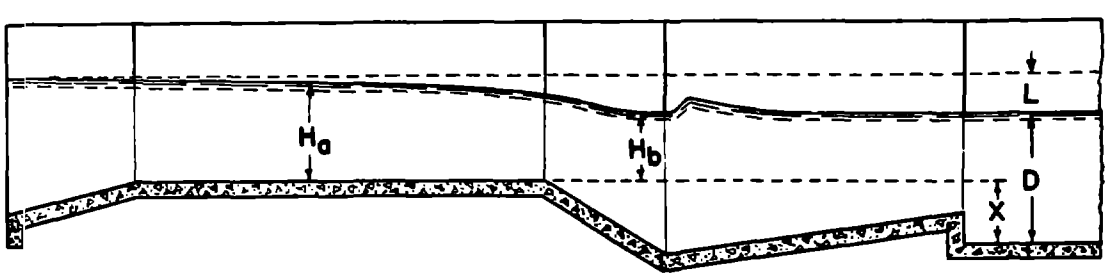

Figure 9-29--Section of a Parshall measuring flume illustrating the determination of the proper crest elevation

H_b, or 0.81 foot, from 2.5 feet, the value of X, or 1.69 feet, is obtained. This is the elevation of the crest above the bottom of the channel. For this size of flume, set with the crest at 1.69 feet above the bed of the channel, the flow of 20 second-feet will be at 70 percent submergence, and the actual loss of head (L) or difference in elevation between the upstream and downstream water surfaces will be 0.40 foot, as determined by figure 9-30. The depth of water upstream from the structure at a flow of 20 second-feet will therefore be 2.90 feet. It will be necessary to examine the freeboard of the channel, as well as the effect of the rise of the water surface upon the flow through the headgate, in deciding which size of flume is the most practical.

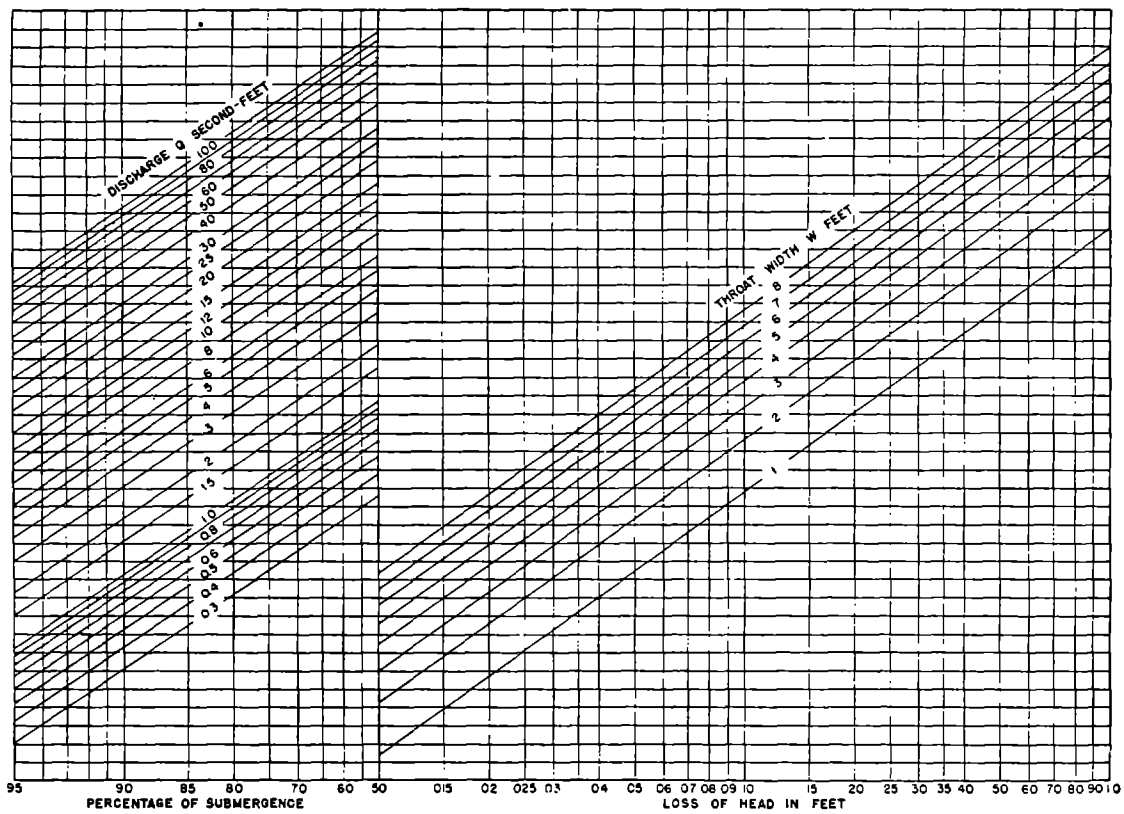

Figure 9-30--Diagram for determining the loss of head through the Parshall measuring flume, 1- to 8-foot sizes

Second: For a 3-foot flume and discharge of 20 second-feet, the H_a head is found to be 1.39 feet (table 9-14). Again for a submergence of 70 percent, the ratio of H_b to H_a is 0.7; hence the H_b for this condition of flow is 0.97. By reference to figure 9-29, the value of X, or the elevation of the crest above the bottom of the channel, is found to be 1.53 feet, and the actual loss of head through the flume (figure 9-30)

is found to be 0.52 foot. The depth of water upstream for this size of flume will now be 3.02 feet.

Next consider a 2-foot flume: as before, find the H_a head in table 9-14 for a free flow of 20 second-feet. For the 2-foot flume this head is 1.81 feet. At a submergence of 70 percent, the value of H_b is 1.27 feet. By again referring to figure 9-29, the value of X or the elevation of the crest above the bed of channel is determined to be 2.50 - 1.27, or 1.23 feet. For this size of flume discharging 20 second-feet at a submergence of 70 percent, the actual loss of head (figure 9-30) is 0.61 foot and the depth of water upstream is 3.11 feet.

If it is found that the banks of the channel and entrance conditions through the headgates are satisfactory, the 2-foot flume will be most economical because of its small dimensions; however, when width of channel is considered the final selection may favor the 3- or 4-foot flume, because moderate to long wing walls may be required. Usually, the width of the throat of the flume will be from one-third to one-half the width of the channel.

In the above analysis of the three sizes of flumes investigated, the actual increase or rise in the depth of water upstream from the structure is considerably less than the elevation of the crest above the bottom of the channel. For the 4-foot flume the crest is 1.69 feet above the channel bed, and the rise in water upstream will be only 0.40 feet.

This analysis further shows that as the size of flume is decreased, the elevation of the crest becomes less, and the depth of water upstream from the structure becomes greater for similar rates of discharge and like degrees of submergence. It is usually the better practice to set the flume high rather than low, to provide a margin of safety for variations of the water surface downstream. In irrigation channels, especially those with earth banks and bottom, deposits of sand or silt may change the downstream flow conditions, and weeds, willows, or moss may likewise affect the degree of submergence.

If it is found impractical to set the flume to operate under a free-flow condition because of insufficient grade or other lining conditions, it becomes necessary to use both the H_a and H_b gages to determine the discharge, as previously explained. The flume may be placed so as to operate at any degree of submergence for any particular rate of flow.

The nomograph shown in Figure 9-31 was developed by Warren Gilbert, Agricultural Engineer, Soil Conservation Service, Sheridan, Wyo., as a tool to aid in setting Parshall flumes. The loss of head figures shown are slightly greater in each case than the values obtained from figure 9-30 for a submergence of 70 percent. This was necessary in order to cover the full range of values from one- to eight-foot widths

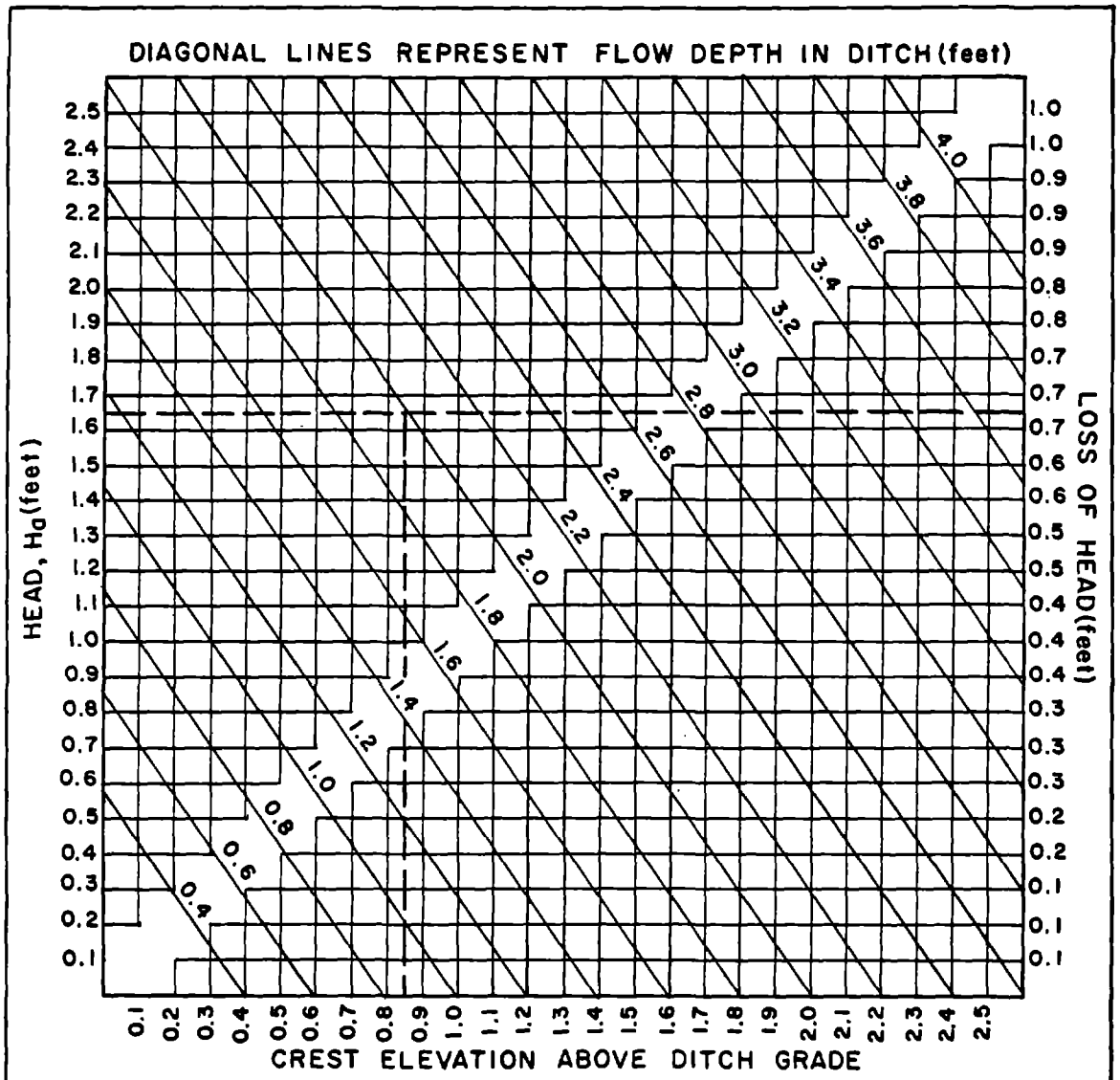

EXAMPLE:

Given: 26 c.f.s. to be measured in a channel where water depth is 2.0 feet. Determine proper setting for 3.0-foot Parshall Measuring Flume.

Solution: From free-flow discharge table for Parshall Measuring Flumes, determine head (H_a) in feet. H_a for a 3.0-foot flume measuring 26 c.f.s. = 1.64. Referring to dashed lines on chart: Setting of crest above ditch to be 0.84 feet or 1.16 below high water line. Loss of head will be 0.7 feet. Flow depth above flume will be 2.7 feet.

Figure 9-31--Size selection and setting chart of 1- to 8-foot Parshall measuring flumes operating under free flow conditions (maximum submergence 70 percent)

for a given H_a. Any error that is introduced is on the side of safety and the accuracy obtained from this chart is adequate for many farm installations.

The Parshall measuring flume may be constructed of sheet metal, timber, or reinforced concrete. Sheet-metal flumes have proved very satisfactory, but since the cost usually exceeds that of either wood or concrete, their use has been restricted to the smaller sizes. While metal flumes up to 10 feet in throat width have been constructed, the most common and practical sizes are those of less than 2 feet. Sheet-metal flumes have the advantage of being portable, and they can readily be reset and readjusted as needed. They have a relatively long life and are immune to fire hazards such as are caused by ditch cleaning. Commercially made flumes of this type are available.

Flumes of all sizes except the smallest have been constructed of timber and have proved satisfactory. Timber flumes usually have an initial cost advantage over concrete flumes; however, their useful life is usually shorter. Timber pressure-treated with creosote or some other preservative will prolong the life of such structures and is economically justified. Timber flumes are subject to damage by fire and by floating ice.

Monolithic reinforced concrete flumes, constructed in sizes ranging from 3 inches to 50 feet, have proved satisfactory. Such flumes have the distinct advantage of permanence and are little subject to expansion or contraction, thus insuring uniformity of operation. They are not subject to fire and other hazards, as are timber structures. Their principal disadvantage is their relatively high initial cost.

Submerged Orifices

A submerged orifice is a hole or opening cut in a bulkhead through which water flows when the water surface on the downstream side is above the top of the opening. Submerged orifices may be divided into two types: (1) Those having fixed dimensions, and (2) those built so that the height may be varied. Those having fixed dimensions are called standard submerged orifices and are preferable to and more widely used than those of variable dimensions. Only the standard submerged orifices will be discussed in the following paragraphs.

The opening of a standard submerged orifice is sharp-edged and usually rectangular with the width two to six times its height. The orifice should have complete contractions, the sides and bottom of the opening being no closer to the sides or bottom of the channel than twice its least dimension.

Submerged orifices are used in channels having flat grades when conditions are not satisfactory for accurate measurement with free-flowing weirs. The submerged orifice is subject to the same disadvantage as the weir--collecting floating debris, sand, and sediment. If the pond on the upstream side of the orifice is allowed to fill with sediment, the accuracy of the measurement is destroyed.

Figure 9-32 shows a perspective of a typical submerged-orifice structure as viewed from upstream. While the structure shown is constructed of wood, other materials such as concrete or metal could be used. Recommended sizes and dimensions for standard submerged-orifice structures are shown in table 9-15.

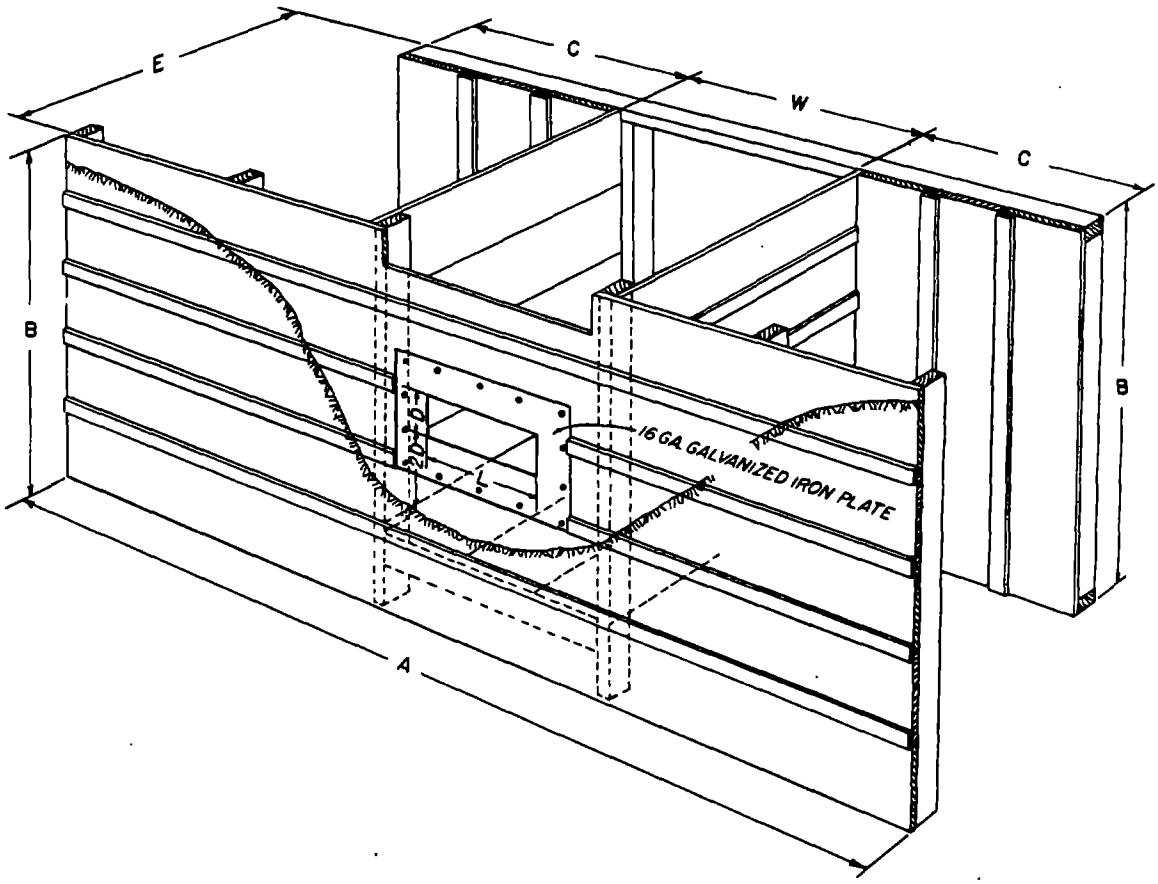

Figure 9-32--Perspective of wooden submerged-orifice structure from upstream

Since the head on a submerged orifice is the difference in elevation between the upstream and downstream water surfaces, measurements are made at two points. Several methods are used. Gages may be fastened to the upstream and downstream wing walls. Often two stakes are set in the channel with their tops at the same elevation, one a few feet upstream from the orifice and the other a few feet downstream. The distances from the tops of the stakes to the two water surfaces are measured with a rule. These measurements should be taken at points far enough from the orifices so that turbulence will not interfere. The difference in these measured distances is the head on the orifice.

Table 9-15.--Recommended sizes and dimensions for submerged-orifice structures[1]

Approximate range in capacity, sec.-ft.	Size of orifice			Height of structure, B	Width of head wall, A	Length E	Width W	Length of down-stream wing wall C
	Height D	Length L	Area					
	In.	In.	Sq.ft.	Ft.	Ft.	Ft.	Ft.	Ft.
0.4 to 1.0	3	12	0.25	4.0	10.0	3.0	2.5	2.0
.5 to 1.4	3	16	.33	4.0	10.0	3.0	3.0	2.0
.8 to 2.1	3	24	.50	4.0	12.0	3.0	3.5	2.0
.5 to 1.4	4	12	.33	4.5	10.0	3.0	2.5	2.5
.8 to 2.1	4	18	.50	4.5	12.0	3.0	3.0	2.5
1.0 to 3.2	4	27	.75	4.5	12.0	3.0	3.5	2.5
.8 to 2.1	6	12	.50	5.0	12.0	3.5	2.5	3.0
1.0 to 3.2	6	18	.75	5.0	14.0	3.5	3.0	3.0
1.5 to 4.3	6	24	1.00	5.0	14.0	3.5	3.5	3.0
2.3 to 6.5	6	36	1.50	5.0	16.0	3.5	4.5	3.0
1.5 to 4.3	9	16	1.00	6.0	14.0	3.5	3.0	3.0
2.3 to 6.5	9	24	1.50	6.0	16.0	3.5	3.5	3.0
3.0 to 8.7	9	32	2.00	6.0	16.0	3.5	4.0	3.0

[1] Dimension letters shown in fig. 9-30.

Discharge through submerged orifices is determined by the formula

$$Q = CA\sqrt{2gh}$$

where Q = discharge in cubic feet per second
C = discharge coefficient equal to 0.61 for orifices with complete contractions
A = cross-sectional area of the orifice in square feet
g = acceleration due to gravity = 32.16 feet per second per second
h = head on the orifice in feet

For convenience, an orifice should be selected so that its cross-sectional area is equal to one of those shown in table 9-15. When this is done, the discharge for any head may be read directly from table 9-16.

Gates

Gates are openings in hydraulic structures. These gates permit the passage of water and are usually provided with some means of regulating outflow. Inasmuch as they have the hydraulic characteristics of orifices, gates of various designs afford an opportunity for discharge measurement. The discharge may either be free or submerged. When the discharge is submerged, gates have the advantage of being able to operate at a low head and can therefore be used in relatively level canals and streams where it is not possible to obtain enough drop for weir measurements. The principal use of gates is to measure the discharge from the canals of irrigation enterprises into individual farm laterals.

Table 9-16.--Flow through rectangular submerged orifices[1]

Head (feet)	Head (inches)[2]	Cross-sectional area of orifice (square feet)						
		0.25	0.333	0.50	0.75	1.00	1.50	2.00
		Sec.-ft.	Sec.-ft.	Sec.-ft.	Sec.-ft.	Sec.-ft.	Sec.-ft.	Sec.-ft.
0.10	1-3/15	0.387	0.518	0.773	1.16	1.56	2.32	3.09
.15	1-13/16	.474	.631	.947	1.42	1.90	2.84	3.79
.20	2-3/8	.547	.729	1.09	1.64	2.19	3.28	4.38
.25	3	.612	.815	1.22	1.83	2.45	3.67	4.89
.30	3-5/8	.670	.892	1.34	2.01	2.68	4.02	5.36
.35	4-3/16	.724	.963	1.45	2.17	2.89	4.34	5.78
.40	4-13/16	.774	1.03	1.55	2.32	3.09	4.64	6.19
.45	5-3/8	.820	1.09	1.64	2.46	3.28	4.92	6.56
.50	6	.865	1.15	1.73	2.59	3.46	5.19	6.92
.55	6-5/8	.907	1.21	1.81	2.72	3.63	5.44	7.25
.60	7-3/16	.947	1.26	1.90	2.84	3.79	5.68	7.58
.65	7-13/16	.986	1.31	1.97	2.96	3.94	5.92	7.89
.70	8-3/8	1.02	1.36	2.05	3.07	4.09	6.14	8.18
.75	9	1.06	1.41	2.12	3.18	4.24	6.36	8.48
.80	9-5/8	1.09	1.46	2.19	3.28	4.38	6.56	8.75

[1] Computed from the formula $Q = 0.61 \ A\sqrt{2gh}$.
[2] Approximate.

The discharge through gates is computed by the standard orifice formula.

$$Q = Ca\sqrt{2gh}$$

When the discharge is free, the head (h) is the difference in elevation between the upstream water surface and the center of the orifice. With submerged discharge, the head is the difference between the elevations of the upstream and downstream water surfaces.

There are no standards of design for gates. Thus it is obvious that the discharge coefficient (C) will vary depending on the geometry of the gate opening, the degree of contraction, and other factors. The shape of the opening for individual gates varies according to how far the gate is opened. Since these factors are in no way standardized, it is essential that any individual gate be calibrated before being used for water measurement.

Commercial gates of standard manufacture are used for water measurement. These have been calibrated by the manufacturer, and tables showing the discharge under various heads and with varying degrees of gate opening are available. Commercial gates are equipped with a device that permits the measurement of the head loss.

A typical commercial gate is shown in figure 9-33. It consists of a circular slide headgate attached to a section of corrugated metal pipe. Flow through the gate must be submerged, and stilling wells are provided in which the difference in elevation between the upstream and downstream water surfaces is measured with a hook gage. The degree of

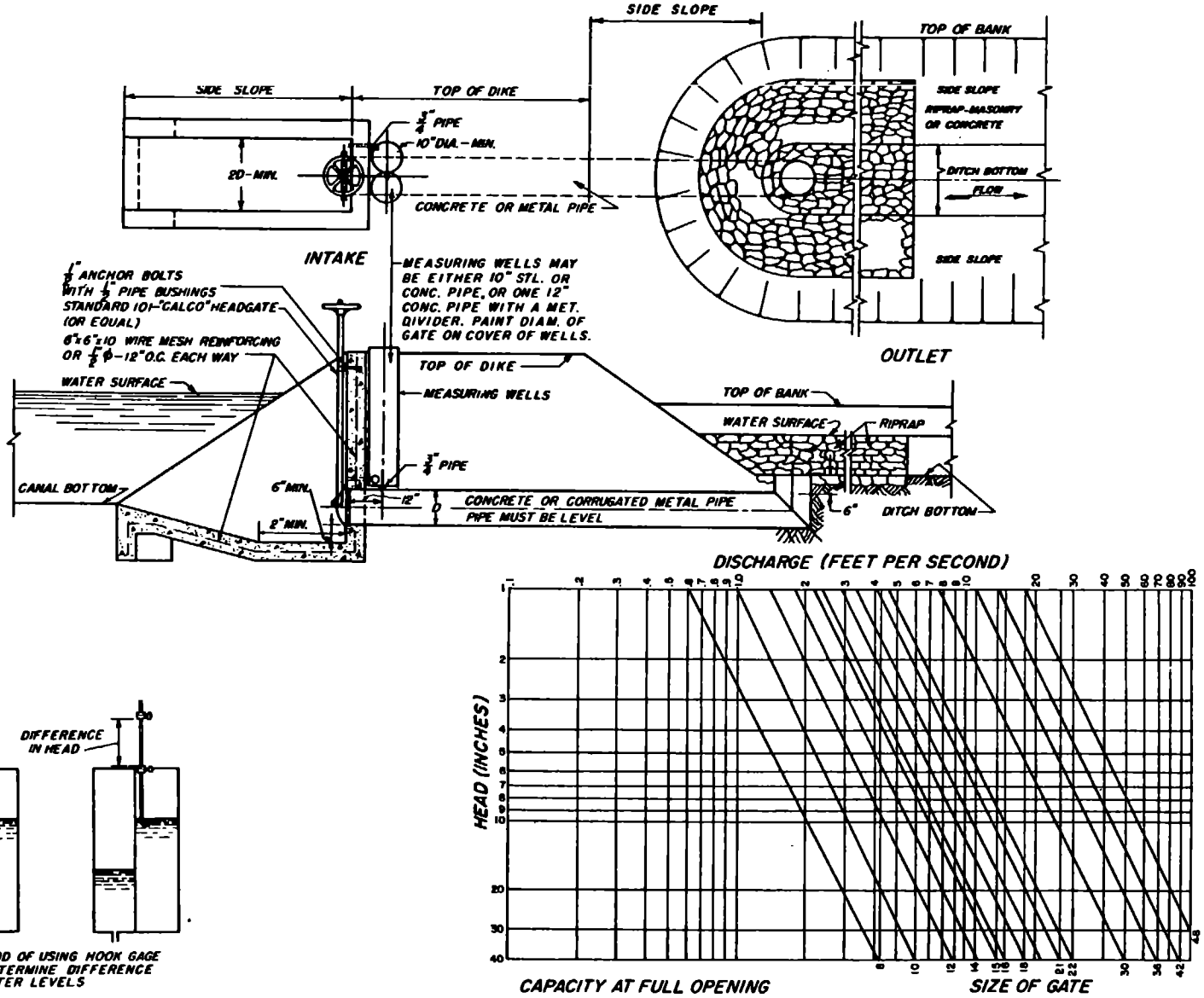

Figure 9-33--Metergate and chart for pipe size selection

gate opening is obtained by filing a notch in the gate stem at a point flush with the top of the handwheel when the gate is at zero point of opening and by measuring the distance between this notch and the top of the handwheel for other openings. This particular gate is available in sizes from 8 to 24 inches in diameter and, under heads ranging from 1 to 18 inches, will measure discharges from less than 1 to 20 cubic feet per second. Discharge measurements in convenient table form are available from the manufacturer for each size gate.

Velocity-Head Rods

The velocity-head rod is a simple, inexpensive measuring stick that can be used to measure with a fair degree of accuracy the velocity of flow in open channels, provided depths and velocities are not too great. Numerous rods have been developed and reported. One rugged and easily constructed rod developed several years ago at the San Dimas Experiment Forest in southern California is shown in figure 9-34.

The principle of the velocity-head rod is not new. It is simply an application of Bernoulli's theorem somewhat different from that used in the Pitot tube. In use, the rod is first placed in the water with its foot on the channel bottom and the sharp edge facing directly upstream. The stream depth at this point is indicated by the reading at the sharp edge of the rod, neglecting the slight ripple or "bow wave." The rod is then turned 180 degrees so as to oppose the flat edge to the streamflow. A hydraulic jump is formed by the obstruction to the flow. The average height of this jump, as read on the rod, measures the total energy content of the stream at this point; the jump height, minus the depth, being the actual velocity head. Thus, for any point in the stream, the velocity can be computed by the standard formula:

$$V = \sqrt{2gh} = 8.02\sqrt{h}$$

where V = velocity in feet per second
g = acceleration due to gravity (32.16 ft./sec./sec.)
h = velocity head in feet

Table 9-17 gives velocities for heads up to 1.5 feet. The discharge of a stream is obtained by taking a number of measurements of depth and velocity at measured intervals throughout its cross section and making area-velocity computations the same way as described in the discussion of current meters.

The rod has obvious limitations. It is inaccurate for velocities much below 1.0 foot per second and for velocities exceeding the critical. Readings are inaccurate where streambeds are soft and unstable. The rod has, however, a very definite and considerable value as a practical, usable method within permissible velocity ranges where straams contain debris and bedload.

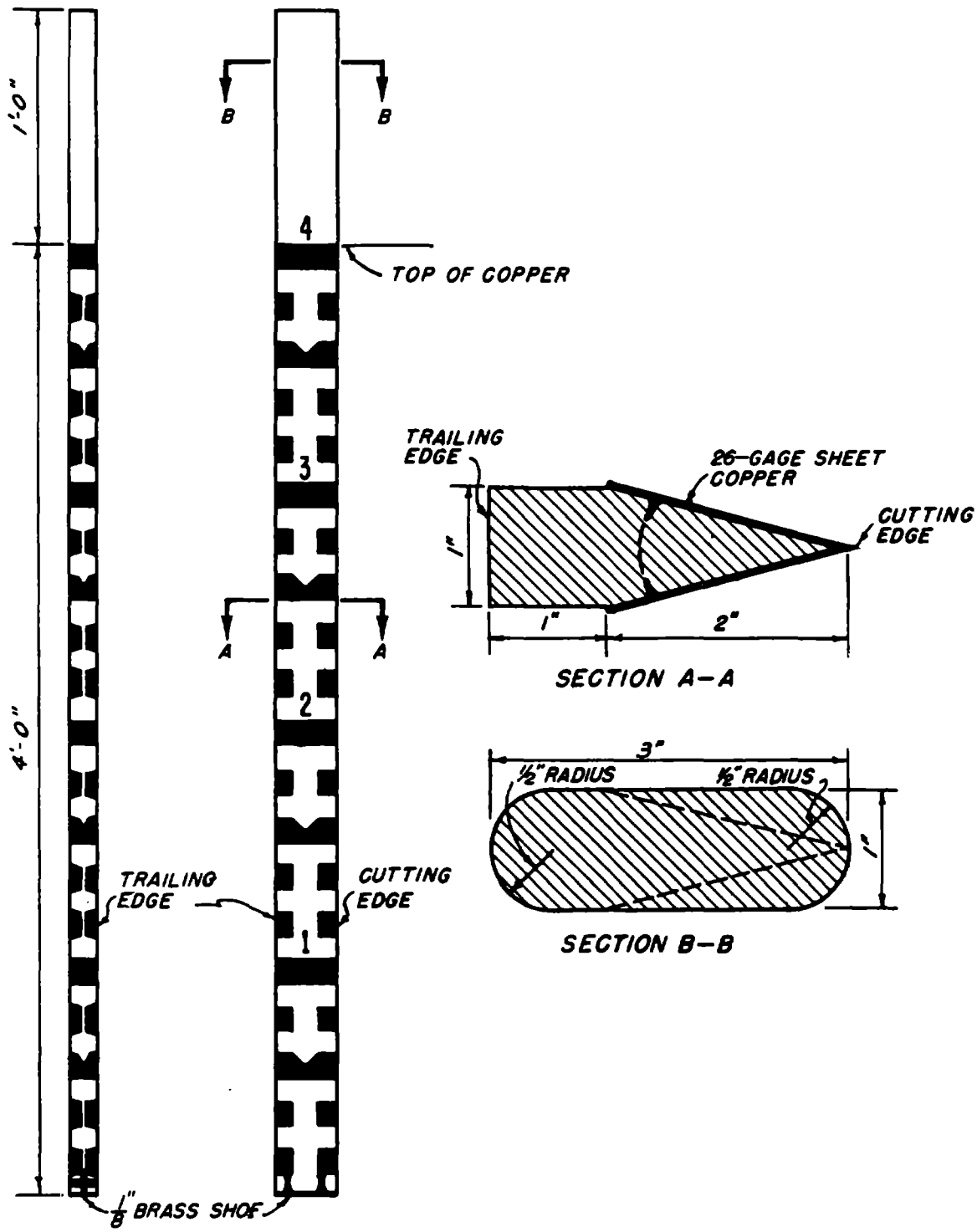

Figure 9-34--Velocity head rod

Table 9-17.--Theoretical velocities for heads of 0 to 1.59 feet, from the formula $V = \sqrt{2gh}$

Head (feet)	.00	.01	.02	.03	.04	.05	.06	.07	.08	.09
	Ft./sec.	Ft./sec.	Ft./sec.	Ft./sec.	Ft./sec.	Ft./sec.	Ft./sec.	Ft./sec.	Ft./sec.	Ft./sec.
0.0	0.00	0.80	1.13	1.39	1.60	1.79	1.96	2.12	2.27	2.41
.1	2.54	2.66	2.78	2.89	3.00	3.11	3.21	3.31	3.40	3.50
.2	3.59	3.68	3.76	3.85	3.93	4.01	4.09	4.17	4.24	4.32
.3	4.39	4.47	4.54	4.61	4.68	4.74	4.81	4.88	4.94	5.01
.4	5.07	5.14	5.20	5.26	5.32	5.38	5.44	5.50	5.56	5.61
.5	5.67	5.73	5.78	5.84	5.89	5.95	6.00	6.06	6.11	6.16
.6	6.21	6.26	6.31	6.37	6.42	6.47	6.52	6.56	6.61	6.66
.7	6.71	6.76	6.80	6.85	6.90	6.95	6.99	7.04	7.08	7.13
.8	7.17	7.22	7.26	7.31	7.35	7.39	7.44	7.48	7.52	7.57
.9	7.61	7.65	7.69	7.73	7.78	7.82	7.86	7.90	7.94	7.98
1.0	8.02	8.06	8.10	8.14	8.18	8.22	8.26	8.30	8.33	8.37
1.1	8.41	8.45	8.49	8.53	8.56	8.60	8.64	8.68	8.71	8.75
1.2	8.79	8.82	8.86	8.89	8.93	8.97	9.00	9.04	9.07	9.11
1.3	9.14	9.18	9.21	9.25	9.28	9.32	9.35	9.39	9.42	9.45
1.4	9.49	9.52	9.56	9.59	9.62	9.66	9.69	9.72	9.76	9.79
1.5	9.82	9.86	9.89	9.92	9.95	9.99	10.02	10.05	10.08	10.11

Stage-Discharge Curves

A stage-discharge curve (sometimes called a rating curve) is one that shows the relation between the depth of flow and the discharge in an open channel at a given point or gaging station along the channel. Stage is the vertical distance to the water surface measured above a permanent elevation usually referred to as zero gage height. Zero flow will correspond to the stage that represents the elevation of the channel bottom above zero gage height. The stage-discharge curve is developed by plotting measured discharges against corresponding observed gage heights at the selected station. It is reliable only when the hydraulic characteristics of the channel remain constant. For example, the opening and closing of headgates and turnouts might cause varying backwater conditions that would destroy the reliability of a curve. A typical stage-discharge curve for an unlined irrigation canal is shown in figure 9-35.

In the development of stage-discharge curves, the discharge measurements are usually made with a current meter as described in previous paragraphs. Stage measurements may be made by sounding, by differential leveling, or by use of a staff gage. The latter method is most common, particularly at permanent gaging stations.

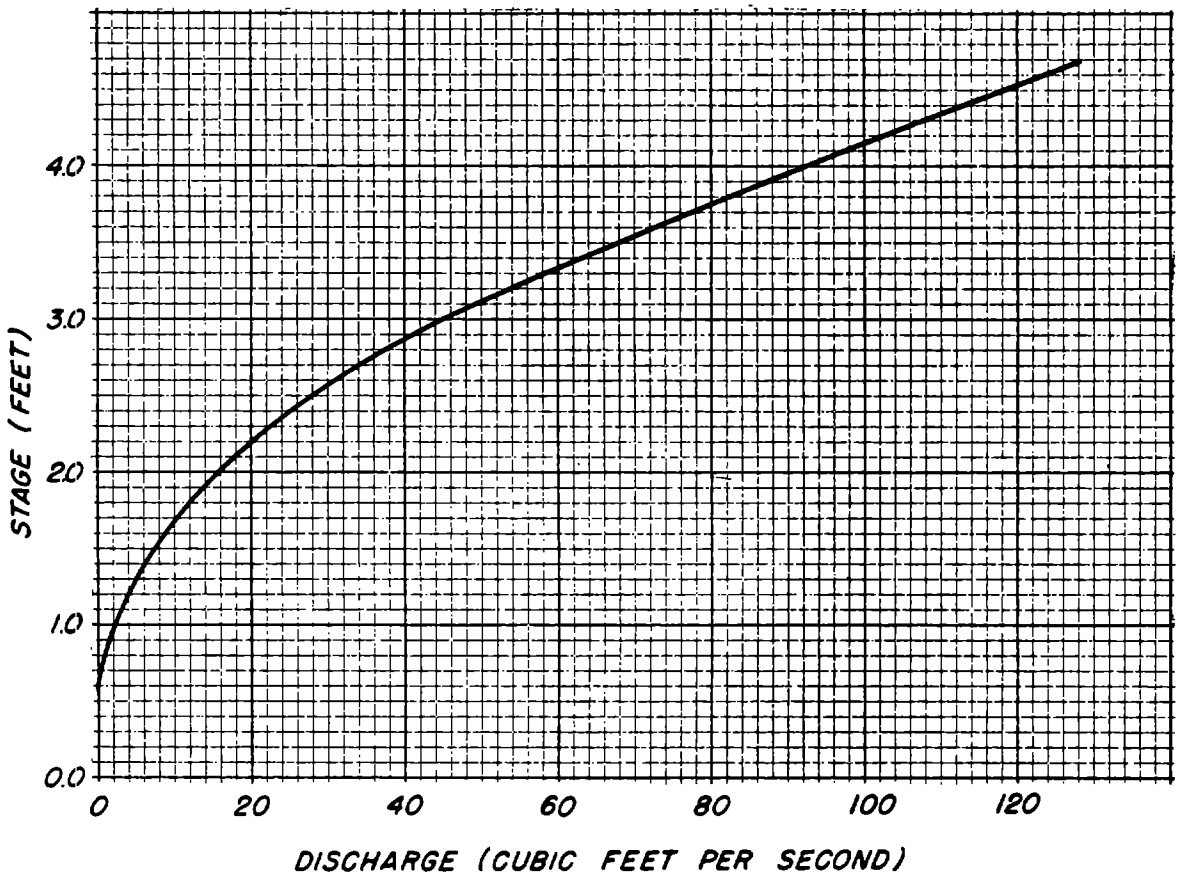

Figure 9-35--Typical stage-discharge curve for unlined irrigation canal

The staff gage is a vertical scale usually graduated in feet and tenths and installed on the faces of piers, walls, or abutments for protection. The scale is often painted on a wooden staff or directly on the sides of the structures previously mentioned. Painted graduations are temporary at best since the paint is subject to weathering and scouring. A porcelain-enameled, sheet-iron staff is more resistant to weathering and is widely used by the U. S. Geological Survey. After a stage-discharge curve has been developed, it is only necessary to read the staff gage and refer to the curve in order to determine the discharge passing the gaging station at any time.

Automatic stage-recording devices are in common use at permanent gaging stations. There are several types of such devices available commercially; however, those in most common use are the float gage and the pressure gage.

The essential parts of a float gage are: (1) A float, installed in a stilling box, which rises and falls with the water surface; (2) a drum, with a record sheet attached, which is rotated by the action of a chain attached to the float; and (3) a clock which moves a pen or pencil axially along the drum. The pen is in contact with the record sheet and produces a continuous stage-time curve as the drum rotates and the pen itself moves along the drum.

The pressure type of recording gage consists of an airtight bulb connected by copper tubing to a pressure chamber that actuates a pen-arm in contact with a circular chart that is revolved by clockwork. The bulb is securely fastened in the bed of the channel below low water, and its bottom is the zero point of the gage. The weight of the water above the bulb compresses the air in the tubing and the pressure chamber, and the movement of a diaphragm on the latter actuates the pen-arm in contact with the record sheet.

The conditions under which the use of automatic stage-recording devices are desirable are:

1. The flow in the stream or channel fluctuates rapidly, and occasional staff-gage readings would not be enough to give a reasonably accurate estimate of discharge.
2. The gaging station is inaccessible or the reliability of available observers is questionable.
3. There is a necessity for continuous records of flow for legal or other purposes.

By the combined use of the stage-discharge curve and the automatic stage recorder, a hydrograph of the stream or channel may be plotted. This is a curve resulting from discharge plotted on a vertical scale against time plotted on a horizontal scale. The area beneath the curve represents the volume of water passing the gaging station within the time range plotted.

☆ U.S. GOVERNMENT PRINTING OFFICE: 1983-380-931:SCS-1060