ISSN 2521-1943. Mechanics and Advanced Technologies #2 (86), 2019

UDC 539
DOI: 10.20535/2521-1943.2019.86.190488

# Surface Modification Processes for Use in LEO, GEO and Planetary Environments

**Jacob I. Kleiman**

**Integrity Testing Laboratory Inc., 80 Esna Park Drive, Units 7-9, Markham, Ontario, L3R 2R7, Canada**

Received: 16 September 2019 / Accepted: 24 September 2019

***Abstract.*** *ITL Inc. through its 30 years of activities in space exploration developed a number of unique processes for impairing new properties to space-bound materials that are exposed in LEO, GEO and planetary environments to space factors like atomic oxygen, ultraviolet radiation, charged energetic particles, etc.*

*For materials flown in LEO missions, the atomic oxygen remains the major hazard. We developed a number of surface modification processes like Photosil, Implantox to change the surface structure of many polymer materials and paints and make them atomic oxygen resistive. For systems operating in GEO orbits the charging effects are among the major hazards. Two surface modification processed developed by ITL successfully solved these problems, while keeping the RF transparency of materials where necessary.*

***Keywords:*** *Surface modification, space environment, low Earth orbit, Photosil™, Implantox™, SurfTex™, Carbosurf™, Carbosurf+*

## 1.0 Introduction

Among the major problems encountered by polymer materials, paints, graphite and polymer-based composites in LEO and GEO space environments one can mention erosion of materials in LEO due to the atomic oxygen effects, change in such functional characteristics like thermal optical properties, surface charging and space equipment performance degradation of high-voltage solar arrays due to arcing in GEO and secondary arcs on solar generators and a number of other problems in long-term modern antennae performance in GEO.

Higher energy erosion processes, such as physical sputtering, are well understood for polymers. Chemical reactions of polymer oxidation at thermal energies, including those by thermal atomic oxygen, are also well understood, yet only a few attempts have been made to study the basic aspects of the accelerated mechanism of polymer erosion by energetic neutral beams [1, 2]. Figure 1 provides a few examples of the effects of low Earth orbit on carbon fiber-epoxy composite materials and Kapton.

An extensive review on surface modification technologies developed for protection of materials from the space environment and for impairing to them new functional properties in different space environments was published in 2010 [3]. The present paper will review briefly the

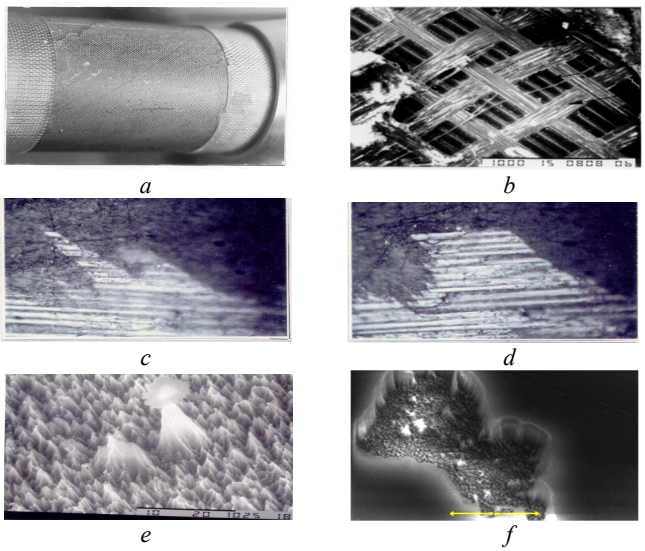


**Fig. 1.** Optical and scanning electron microscopy analyses of materials exposed to LEO environment factors

*a*) Optical image of the carbon fiber-epoxy 4-ply composite material tube (~ 50 mm in diameter) exposed to the LEO environment for ~ 4.5 years on the LDEF satellite; *b*) Enlarged scanning electron microscpy analysis image of a region on the surface of the tube; *c*) and *d*) Optical images of cross-sectioned carbon fiber-epoxy 4-ply composite material tube; *e*) SEM image (secondary electrons) of a Kapton HN polymer exposed to a FAO flux of ~ 4E15 at/cm$^2$/s for 6 hrs in a LEO environment simulator; *f*) Planar secondary electrons SEM image of a Kapton polymer with a protective coating exposed to a FAO flux of ~ 1E15 at/cm$^2$/s for ~ 24 hours in a LEO simulator showing strong erosion of an area that contained, most probably, a defect or a pit through which the erosion started



✉ Jacob I. Kleiman
jkleiman@sintec.ca

work on surface modification technologies that were developed at ITL either to protect the basic properties of the materials [4 – 11] or to change them in a desirable way, without altering the bulk properties [12 – 14].

## 2.0 Surface Modification Processes Developed at ITL

### 2.1 Surface Modification Processes for Protection in LEO

Protective coatings of oxides, such as silicon and aluminum oxides, deposited on the surface of polymers or composites provide improved erosion resistance in LEO environment. However, the thin oxide coatings when exposed to thermal cycling in the LEO space environment develop cracks and/or spalling, mostly because of interfacial stresses and differences in thermal expansion coefficients between the coatings and polymers they supposed to protect. These destructive processes leave the underlying polymeric material exposed to FAO, thus causing extensive surface erosion. High-quality protection of polymer-based materials in LEO, therefore, remains a major challenge, especially for future long-duration missions or deployed space stations.

Surface modification processes designed for protection of materials from the harsh space environment factors were developed as a complimentary to coatings approach and that in many cases are lacking the deficiencies of the coating approaches. Two surface modification processes, one taking a "chemical route" [15] while the other followed the "physical route" [16] were developed by ITL for protecting the polymer materials from erosion by atomic oxygen in LEO.

The Photosil™ process that represents the chemical approach, involves three major steps, i.e. UV/air pre-treatment (activation) of the material, actual silylation, and UV/air post-treatment (stabilization) of the modified material. The process is based on a silylation reaction allowing Si to be incorporated into the sub-surface region of the originally treated material. A newly developed organic structure containing silicon, carbon, and oxygen atoms bonded in a complex configuration is formed at the end of the process that stops the destruction of polymers, thermal control paints and other organic-based materials in different oxidizing environments. It was confirmed through XPS and SIMS depth profile analyses that the silicon atoms penetrated to a depth of at least 0.5 μm.

The XPS data for the thermal control paints indicated a sharp increase in silicon and oxygen contents in the outer portion of the surface region with a decrease in carbon content and a nearly total disappearance of nitrogen, as a result of Photosil™ treatment. These results verified the incorporation of silicon-containing groups and confirm the modification of the sub-surface region of the original paint material.

No mass loss or morphology changes were evident for the Photosil™ treated polymer samples after FAO testing. Moreover, the XPS surface content of samples before and after the FAO testing was practically the same for all analysed samples. The FAO test results for the other Photosil™ treated samples showed that the erosion yields were about one-to-two orders of magnitude lower than the erosion yield of untreated polymer samples as shown in Table I.

Table I

**Summary of Erosion Yield for a number of materials treated by Photosil and exposed to AO Flux for 6 hours**

| Material | Treatment | Erosion Yield (g/atom) |
|---|---|---|
| Kapton 500 HN | Control (untreated) | $4.3 \times 10^{-24}$ |
| | Photosil | $\leq 5.5 \times 10^{-26}$ |
| PEEK | Control (untreated) | $2.8 \times 10^{-24}$ |
| | Photosil | $\leq 7.9 \times 10^{-26}$ |
| Gray Paint (A276:Z306) | Control (untreated) | $1.0 \times 10^{-24}$ |
| | Photosil | $\leq 7.0 \times 10^{-26}$ |
| Black Paint (Z306) | Control (untreated) | $6.2 \times 10^{-25}$ |
| | Photosil | $\leq 6.5 \times 10^{-26}$ |
| White Paint (A276) | Control (untreated) | $5.1 \times 10^{-25}$ |
| | Photosil | $\leq 2.6 \times 10^{-27}$ |

Fig. 2 provides an example of a lacing tape, an aromatic polyamide (Nomex) flat braided tape impregnated with a synthetic resin that is used on the International Space Station that was treated by Photosil and exposed to an O-plasma.

Thermal optical characteristics of pristine, Photosil™-treated, and Photosil/FAO-tested polyurethane-based paints were also evaluated before and after surface treatment and FAO testing. All paints after surface treatment have maintained their original thermal optical properties, even after FAO exposure. Both solar absorptance and thermal emittance values remained essentially unchanged within the experimental uncertainty ($\alpha = \pm 0.02$ and $\varepsilon = \pm 0.01$). A slight increase of the thermal emittance of the untreated samples after AO exposure was noticed that might be due to roughening of the surface by non-uniform erosion of the paint.

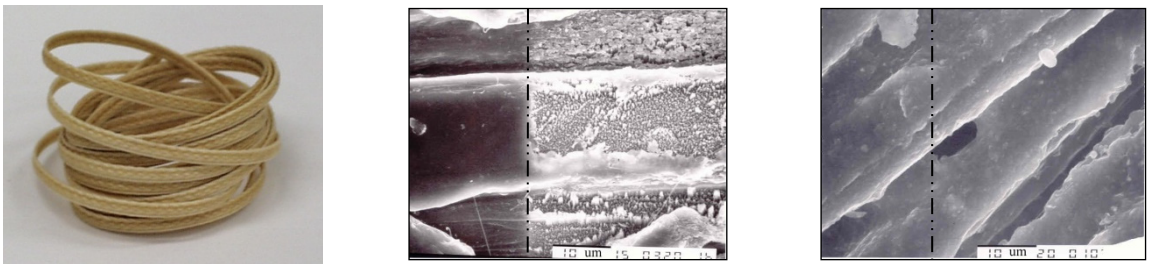

*a* *b* *c* *d* *e*

**Fig. 2.** Optical image (*a*) and SEM micrographs of lacing tape exposed to oxygen plasma (Effective Fluence ~ 2. × $10^{20}$ atoms/$cm^2$) before and after Photosil$^{TM}$ treatment. Magnification 2000x. (*b*) Untreated surface, masked section; (*c*) Untreated surface, exposed section; (*d*) Treated surface, masked section; (*e*) Treated surface, exposed section. The black line separates the masked and unmasked regions on the surface

Another surface modification process based on high energy ion beam sources was developed to modify space–bound materials in order to provide new protective properties to their surfaces. A method of surface modification of advanced polymers, graphite and carbon-based composites named Implantox$^{TM}$ and based on high–dose ion implantation with *Si*, *Al*, *Si* + *Al*, *Si* + *B*, *Si* + *Al* + *B*, *Y*, *Sm*, *Gd* and special oxidative post-treatment was developed and patented in 1997 [6, 7, 9, 16]. The developed technology allowed increasing dramatically the erosion and oxidation resistance of polymer–based materials together with substantial improvements in mechanical, electrical, and optical properties.

The sequence of processes happening on an atomic level in the surface layers of a modified material, during treatment by Implantox$^{TM}$ can be understood from the schematic drawing (Fig. 3). At the first stage, implantation with high dose, and low or medium energy ions of specially selected metal or semi-metal elements is performed. During the implantation process, the surface region is enriched with the implanted species (*I*), and a release of volatiles (*AB*, *BC*, $A_2$, etc.) may occur at the same time, leaving a carbonized or graphitized surface layer on the original material.

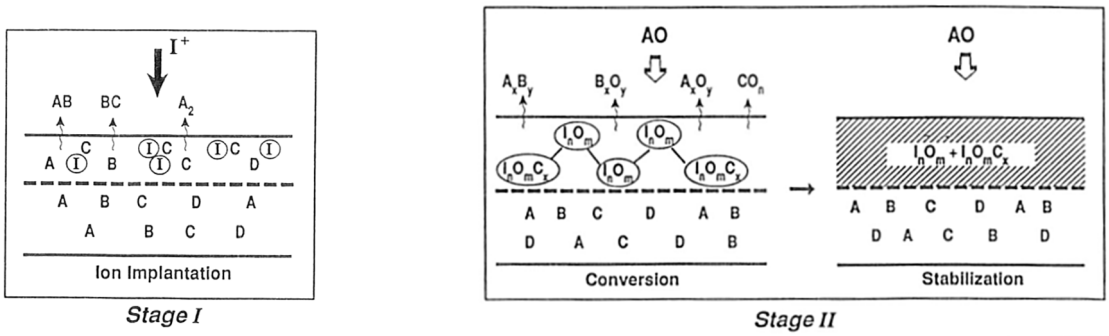


**Fig. 3.** Schematic presentation of the Implantox$^{TM}$ process

The second stage in the process is carried out in appropriate oxidative environment containing atomic oxygen (AO), for instance, under exposure to FAO flux. A number of processes are happening simultaneously at this stage among which the oxidation of the remaining organics, the release of the formed volatiles ($B_xO_y$, $A_xO_y$, $CO_n$), and the oxidation of the implanted elements with formation of oxide(s)-based precipitates can be mentioned. The implanted layer is then gradually converted to a layer of oxide(s)-based compound(s) and is stabilized in this form, thus providing long-term protection of the original polymer underneath. The kinetics of mass loss upon exposure to FAO flux during the conversion and surface stabilization stages presents a clear indication of the development of erosion resistant, protective surface layer (Fig. 4).

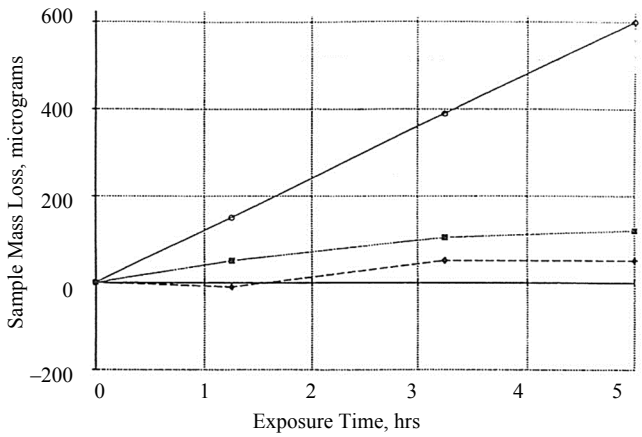


**Fig. 4.** Kinetic plots of mass loss of Kapton polyimide, implanted with silicon and aluminum (diamonds); with silicon, aluminum and boron (squares) and of an untreated sample (circles) under fast atomic oxygen and vacuum ultraviolet irradiation exposure. Notice that mass loss in both implanted samples stopped shortly after the start of the experiment, indicating that full surface stabilization and protection were achieved

The implantation energy range required to produce a 50–100 nm thick, modified, protective oxide–based layer in most of the treated materials was determined to be 20–50 keV and the required ion dose range was found to be $10^{16} – 10^{17}$ ions/cm$^2$ [16].

### 2.2 Surface Modification Processes to Impair New Functional Properties

A surface modification texturing process, Surftex™ was developed at ITL that changes the reflectance of the surface in a controlled manner from completely specular to almost completely diffuse [12, 13]. The developed process is based on ion-beam bombardment of the surface with noble gases. As a result of such treatment, the specularity of the treated surfaces can be reduced dramatically, with the surface morphology changing from metallic-like and shiny to complete milky, white appearance.

The developed process was applied to Silver / Inconel-coated on the back Teflon thermal protective coverings [12–14] that were attached using an adhesive to cameras and other equipment on the International Space Station.

Fig. 5 shows the total and diffuse reflectance of a 127 μm thick Silver/Inconel metallized Teflon sample after its mirror-like surface was treated with Krypton ions. As can be seen from Fig. 5, after the ion-bema treatment, most of the light was reflected as diffused, with the diffused reflectance almost equalling the total reflectance. The developed treatment allowed reducing dramatically the specularity of Silver/Inconel metallized Teflon thermal control films and eliminating glare, without significantly affecting their thermal optical properties

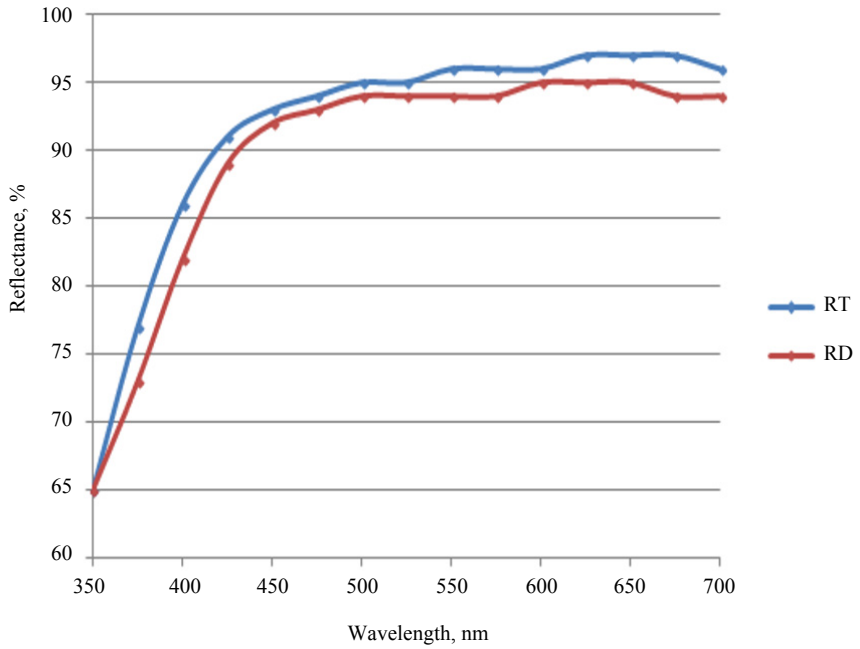


**Fig. 5.** Total ($R_T$) and diffuse ($R_D$) reflectance measurements for a Ag/Teflon sample after an exposure to a Krypton gas ion-beam

### 2.3 Charge Dissipative Ion-beam Treatment Process Carbosurf™

A few variants of a surface modification technology, Carbosurf that were developed to achieve charge dissipative properties on the surface of polymers are based on the controlled carbonization of the surface layer of thin polymer films [17, 18]. Temperature stable surface resistivity (SR) in the charge dissipative range, from ~2 MΩ/sq up to 150 MΩ/sq, has been achieved on hydrocarbon and partially fluorinated polyimides due to surface carbonization using specially selected ion beam treatment conditions. The created surface resistivity can be tailored to the desired values for particular applications on a variety of space polymer films. The Carbosurf treatment is performed using ion beams, without affecting the mechanical and any other properties of the polymeric material underneath, and may be scaled-up using industrial high-intensity ion beams.

The main advantage of surface carbonization over technologies currently available is a low dependence of the achieved surface resistivity on temperature and excellent RF performance. Fig. 6 presents the results of measurements of SR behavior in the temperature range from –150°C to +150°C for two treated polymers, namely, CP1 treated by $Ar^+$ ion beam and Kapton HN exposed to $Kr^+$ ion beam [19]. As can be seen from Fig. 6, the ion beam treated samples keep the surface resistivity in the appropriate range of values over the whole range of measured temperatures.

The other important feature of the Carbosurf™-treated materials, i.e. their full RF permeability. The significant distinction of the developed surface carbonization technology from deposition of semi-conductive coatings is that the Carbosurf™ treatment is "graded" into the material thus eliminating any sharp interfaces that could be a weak point of the alternate coatings' technologies.

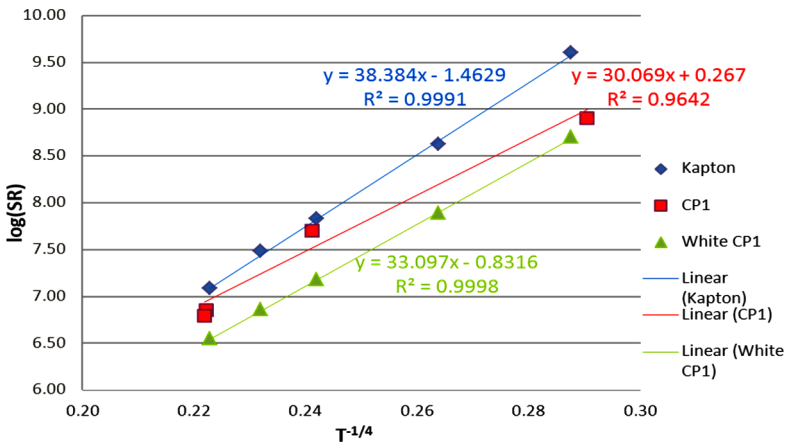


**Fig. 6.** Semi-log graphs of the $T^{-1/4}$ temperature dependence of surface resistivity of a few polyimide samples with different Carbosurf treatments. The found T-dependence is an indication of variable range hopping conductivity mechanism in the thin Carbosurf-treated surface layer of polymers

Charge dissipation and RF transmittance of Carbosurf™ treated polymers provide a broad range of required SR values in a very thin top surface layer, without any influence on the rest of material and on RF transmittance. By tuning the process parameters, it is possible to obtain surface resistivity changes in a range over 5 orders of magnitude, as well as variable thermal optical properties with a weak temperature dependence of surface resistivity at low temperatures and no RF losses in the treated materials.

### 3.0 Summary

Surface modification technologies present a viable alternative for protection and impairment of new functional properties to polymers, paints and other carbon-based materials and structures used in space. The surface modification processes developed at ITL provide an alternative solution to the problems caused by different space environmental factors to polymer-based materials, composites and paints used in LEO/GEO spacecrafts. The developed processes allow drastically reducing the atomic oxygen erosion by creating a self-healing protective layer that allows, in turn, protecting the major functional properties like the thermal optical properties.

Ion-beam based surface modification treatments allowed to impair new functional properties to surfaces like reduced glare or increased surface conductivity that extended the use of traditional space materials in space applications.

### 4.0 Acknowledgments

The author would like to thank his co-workers, Dr. Z. Iskanderova and Dr. Y. Gudimenko for their devotion to the topic and many years of hard work at ITL on development of these processes. Special thanks are due to Prof. R.C. Tennyson who envisaged the importance of the surface modification approach and was mostly instrumental in the first steps undertaken at UTIAS and ITL in this field. Finely my thanks are due to all my colleagues who participated in the work during the past years that lead to the development and applications of the surface modification technologies at ITL.

**References**

1. Minton, T.K., Seale, J.W., Garton, D.J. and Frandsen, A.K. (2001), "Dynamics of Atomic-oxygen Degradation of Materials", In Proceedings of ICPMSE–4, "Protection of Space Materials from Space Environment", *Kluwer Academic Publishers*, *Space Technology Proceedings*, v.4, eds. J.I. Kleiman and R.C. Tennyson, Toronto, Canada, May 1–3, 2002, pp. 15 – 31.
2. Pascual, R.Z, Schatz, G.C. and Garton, D.J. (1995), "A Direct Trajectory Dynamics Investigation of Fast O+ Alkane Reactions", In Proceedings of ICPMSE-6, Protection of Materials and Structures from the Space Environment, Toronto, April 23–24, 1998, *Kluwer Academic Publishers*, *Space Technology Proceedings*, v.5, eds. J.I. Kleiman and Z.I. Iskanderova, 2003, pp. 537 – 541.

3. Kleiman, J.I. (2010), "Surface Modification Technologies for Durable Space Polymers", *MRS Bulletin*, January, vol. 35, no. 01, pp. 55 – 65.
4. Iskanderova, Z., Kleiman, J., Mojazza, B. and Sutton, M. (1993), "Erosion Protection and Surface Conductivity Enhancement of TOR Polymers by Implantox Technology", in Proceedings of the 9th Symposium on Materials in a Space Environment, 16–20 June 1993, Noordwijk, The Netherlands, pp. 473–478, June; Goudimenko, Y., Iskanderova, Z., Kleiman, J., Cool, G.R., Morison, D., Tennyson, R.C. 1997, "Erosion Protection of Polymer Materials in Space", *in: Proc. 7th Intern. Symp., Materials in Space Environment*, Toulouse, France, pp. 403–410.
5. Goudimenko, Y., Iskanderova, Z., Kleiman, J., Cool, G.R., Morison, D. and Tennyson, R.C. (1997), "Erosion Protection of Polymer Materials in Space", *in: Proc. 7th Intern. Symp., Materials in Space Environment*, Toulouse, France, pp. 403 – 410.
6. Iskanderova, Z., Kleiman, J., Gudimenko, Y., Morison, W.D. and Tennyson, R.C. (1997A), "Improvement of Oxidation and Erosion Resistance of Polymers and Composites in Space Environment by Ion Implantation", *Nuclear Instruments and Methods in Physics Research*, vol. B127/128, p. 702–709.
7. Iskanderova, Z., Kleiman, J., Morison, W.D. and Tennyson, R.C. (1998), "Erosion Resistance and Durability Improvement of Polymers and Composites in Space Environment by Ion Implantation", *Mat. Chem. Phys*. vol. 54, pp. 91–97.
8. Iskanderova, Z., Kleiman, J.I., Gudimenko, Y., Morison, W.D. and Tennyson, R.C. (1999), "Surface Modification of Polymer–Based Materials by Ion Implantation – A New Approach for Protection in LEO", in: Protection of Materials and Structures in LEO Space Environment, Eds. J.I. Kleiman, R.C. Tennyson, *Kluwer Academic Publishers*, pp. 225–234.
9. Gudimenko Y, Ng R, Kleiman J, Iskanderova Z, Hughes PC, Tennyson RC, Milligan D (2002) " Photosil$^{TM}$ Surface Modification Treatment of Polymer-Based Space Materials and External Space Components", *in Proceedings of the 6$^{th}$ International Conference on Protection of Materials and Structures from Space Environment – ICPMSE–6*, eds. Kleiman, J. and Iskanderova, Z., Toronto, May 1 – 3, pp. 419 – 434.
10. Gudimenko, Y., Ng. R., Kleiman, J.I., Iskanderova ZA, Tennyson R.C., Hughes P.C., Milligan D., Grigorevski A., Shuiski M., Kiseleva L., Edwards D., Finckenor M. (2003) "Enhancement of Surface Durability of Space Materials and Structures in LEO Environment", *in: Proceedings of the 9th International Symposium on Materials in a Space Environment,* 16 – 20 June 2003, (ESA SP–540. September 2003), Noordwijk, The Netherlands, pp. 95–106.
11. Kleiman, J., Iskanderova, Z. and Tennyson, R.C. (1998), "Ion Implantation Protects Surfaces", *Advanced Materials and Processes*, pp. 26–30.
12. Kleiman, J.I., Iskanderova, Z.A., Gudimenko, Y.I., Morison, W.D. and Tennyson, R.C. (1999), "Polymers and Composites in the Low Earth Orbit Space Environment: Interaction and Protection", *Canadian Aeronautic and Space Journal*, vol. 45, no. 2, pp. 148–160.
13. Kleiman, J.I., Popov, O., Tong, A. and Molenda, D. (1996), "Development of High Diffuse Reflectance Surfaces on Teflon", April, 25–26, *in Proceedings of the ICPMSE–3 Conference, Publisher Kluwer Academic Publishers,* pp. 167–177.
14. Kleiman, J.I. and Gudimenko, Y. (1997), "Reduced Glare, High Diffuse Reflectance Teflon Surfaces for Improved Performance of Video Cameras on Canadian MSS For SS Alpha", *The 7–th International Symposium on Materials in a Space Environment, ENSAE–SUPAERO,* 16–20 June, Toulouse, Franc, pp. 419–425.
15. Kleiman, J.I., Iskanderova, Z. and Antoniazzi, J. (2009), Long Term Flight Performance of High Diffuse Reflectance Ag/Teflon Coverings Flown on Canadian Mobile Servicing Station, MSS, *Proceedings of the ISMSE–11 Symposium,* Aix–en-Provence, France, (available on CD), 15–18 September 2009.
16. Goudimenko, Y., Kleiman, J.I., Cool, G.R., Iskanderova, Z., Tennyson, R.C. (1999), *Modyfikatsiya pidzemnoyi oblasti polimeriv ta materialiv na osnovi vuhletsyu* [Modification of Subsurface Region of Polymers and Carbon-Based Materials], U.S., Pat. 5,948,484.
17. Iskanderova, Z., Kleiman, J.I., Goudimenko, Y., Cool, G.R., Tennyson, R.C. (1997B), *Modyfikatsiya poverkhni polimernykh ta vuhletsevykh materialiv shlyakhom ionnoyi implantatsiyi ta okyslyuval'noyi konversiyi* [Surface Modification of Polymer and Carbon–Based Materials by Ion Implantation and Oxidative Conversion], U.S., Pat. 5,683,757.
18. Iskanderova, Z., Kleiman, J.I. and Bussieres, F. (2015), *Sposib vyhotovlennya dysypatyvnykh poverkhon' zaryadiv z polimernykh materialiv z nyz'koyu temperaturoyu zalezhnosti oporu poverkhni ta nyz'kykh vtrat RF* [Method of Making Charge Dissipative Surfaces of Polymeric Materials with Low Temperature Dependence of Surface Resistivity and Low RF Loss], U.S., Pat. 9,174,396 B2.
19. Nömayr, Ch., Zimmermann, C., Iskanderova, Z., Kleiman, J. (2015), *Sposib vyhotovlennya poverkhnevoho sharu, shcho rozsiyuye zaryad* [Method for manufacturing a charge dissipative surface layer], Pat. PCT WO 2015/074758 Al.
20. Iskanderova, Z., Kleiman, J.I., Issoupov, V. and Bussieres, F. (2009), "CARBOSURF™ Surface Modification Technology for Charge Dissipative and Radio–Transparent GEO Durable Space Polymers", *in Proceedings of the 9th International Conference "Protection of Materials and Structures from Space Environment"*, Toronto, Canada, 20–23 May, 2008, ed. J.I. Kleiman, AIP Conference Proceedings 1087, 2009, pp. 588–599.


# Процеси поверхневих модифікацій для використання в навколоземних і геостаціонарних орбітах і планетарних середовищах

**Я. И. Клейман**

***Аннотація.*** *Компанія ITL Inc. за 30 років своєї діяльності в галузі дослідження космосу розробила ряд унікальних процесів забезпечують нові властивості матеріалів використовуваних в космосі, які піддаються впливу таких космічних факторів на навколоземних (LEO) і, геостаціонарних орбітах (GEO) і в планетарних середовищах, як атомарний кисень, ультрафіолетове випромінювання , заряджені енергетичні частинки, і т.д.*

*Для матеріалів, що літають в місіях на навколоземних орбітах (LEO), атомарний кисень залишається головною небезпекою. Ми розробили ряд процесів по модифікації поверхні, таких як Photosil, Implantox, які дозволяють змінити структуру поверхні багатьох полімерних матеріалів і фарб і зробити їх стійкими до дії атомарного кисню. Для систем, що працюють на геостаціонарних орбітах (GEO), ефекти пов'язані з електричними зарядами на поверхнрсті відносяться до числа основних небезпек. Два процеса поверхневої модифікації, розроблені ITL, успішно вирішили ці проблеми, зберігаючи при цьому, де необхідно, повну радіо проникність матеріалів.*
***Ключові слова:*** *Зовнішнє зміна, космічне оточення, низька Земляна орбіта, PHOTOSIL™, IMPLANTOX™, SurfTex™, CARBOSURF™, Carbosurf +.*

# Процессы поверхностных модификаций для использования в околоземных и геостационарных орбитах и планетарных средах

**Я. И. Клейман**

***Аннотация.*** *Компания ITL Inc. за 30 лет своей деятельности в области исследования космоса разработала ряд уникальных процессов обеспечивающих новые свойства материалам используемых в космосе, которые подвергаются воздействию таких космических факторов на околоземных (LEO) и, геостационарных орбитах (GEO) и в планетарных средах, как атомарный кислород, ультрафиолетовое излучение, заряженные энергетические частицы, и т.д.*
*Для материалов, летающих в миссиях на околоземных орбитах (LEO), атомарный кислород остается главной опасностью. Мы разработали ряд процессов по модификации поверхности, таких как Photosil, Implantox, которые позволяют изменить структуру поверхности многих полимерных материалов и красок и сделать их устойчивыми к воздействию атомарного кислорода. Для систем, работающих на геостационарных орбитах (GEO), эффекты связанные с электрическими зарядами на поверхнрсти относятся к числу основных опасностей. Два процеса поверхностной модификации, разработанные ITL, успешно решили эти проблемы, сохраняя при этом, где необходимо, полную радио проницаемость материалов.*
***Ключевые слова:*** *Внешнее изменение, космическое окружение, низкая Земляная орбита, PHOTOSIL™, IMPLANTOX™, SurfTex™, CARBOSURF™, Carbosurf+.*

**References**

1. Minton, T.K., Seale, J.W., Garton, D.J. and Frandsen, A.K. (2001), "Dynamics of Atomic-oxygen Degradation of Materials", In Proceedings of ICPMSE-4, "Protection of Space Materials from Space Environment", *Kluwer Academic Publishers*, *Space Technology Proceedings*, v.4, eds. J.I. Kleiman and R.C. Tennyson, Toronto, Canada, May 1–3, 2002, pp. 15 – 31.
2. Pascual, R.Z, Schatz, G.C. and Garton, D.J. (1995), "A Direct Trajectory Dynamics Investigation of Fast O+ Alkane Reactions", In Proceedings of ICPMSE-6, Protection of Materials and Structures from the Space Environment, Toronto, April 23–24, 1998, *Kluwer Academic Publishers*, *Space Technology Proceedings*, v.5, eds. J.I. Kleiman and Z.I. Iskanderova, 2003, pp. 537 – 541.
3. Kleiman, J.I. (2010), "Surface Modification Technologies for Durable Space Polymers", *MRS Bulletin*, January, vol. 35, no. 1, pp. 55 – 65.
4. Iskanderova, Z., Kleiman, J., Mojazza, B. and Sutton, M. (1993), "Erosion Protection and Surface Conductivity Enhancement of TOR Polymers by Implantox Technology", in Proceedings of the 9th Symposium on Materials in a Space Environment, 16–20 June 1993, Noordwijk, The Netherlands, pp. 473 – 478, June; Goudimenko, Y., Iskanderova, Z., Kleiman, J., Cool, G.R., Morison, D., Tennyson, R.C. 1997, "Erosion Protection of Polymer Materials in Space", *in: Proc. 7th Intern. Symp., Materials in Space Environment*, Toulouse, France, pp. 403 – 410.
5. Goudimenko, Y., Iskanderova, Z., Kleiman, J., Cool, G.R., Morison, D. and Tennyson, R.C. (1997), "Erosion Protection of Polymer Materials in Space", *in: Proc. 7th Intern. Symp., Materials in Space Environment*, Toulouse, France, pp. 403 – 410.
6. Iskanderova, Z., Kleiman, J., Gudimenko, Y., Morison, W.D. and Tennyson, R.C. (1997A), "Improvement of Oxidation and Erosion Resistance of Polymers and Composites in Space Environment by Ion Implantation", *Nuclear Instruments and Methods in Physics Research*, vol. B127/128, p. 702 – 709.
7. Iskanderova, Z., Kleiman, J., Morison, W.D. and Tennyson, R.C. (1998), "Erosion Resistance and Durability Improvement of Polymers and Composites in Space Environment by Ion Implantation", *Mat. Chem. Phys*. vol. 54, pp. 91 – 97.
8. Iskanderova, Z., Kleiman, J.I., Gudimenko, Y., Morison, W.D. and Tennyson, R.C. (1999), "Surface Modification of Polymer–Based Materials by Ion Implantation – A New Approach for Protection in LEO", in: Protection of Materials and Structures in LEO Space Environment, Eds. J.I. Kleiman, R.C. Tennyson, *Kluwer Academic Publishers*, pp. 225 – 234.
9. Gudimenko Y, Ng R, Kleiman J, Iskanderova Z, Hughes PC, Tennyson RC, Milligan D (2002) " Photosil™ Surface Modification Treatment of Polymer-Based Space Materials and External Space Components", *in Proceedings of the 6th International Conference on Protection of Materials and Structures from Space Environment – ICPMSE–6*, eds. Kleiman, J. and Iskanderova, Z., Toronto, May 1 – 3, pp. 419 – 434.
10. Gudimenko, Y., Ng. R., Kleiman, J.I., Iskanderova ZA, Tennyson R.C., Hughes P.C., Milligan D., Grigorevski A., Shuiski M., Kiseleva L., Edwards D., Finckenor M. (2003) "Enhancement of Surface Durability of Space Materials and Structures in LEO Environment", *in: Proceedings of the 9th International Symposium on Materials in a Space Environment,* 16 – 20 June 2003, (ESA SP–540. September 2003), Noordwijk, The Netherlands, pp. 95 – 106.
11. Kleiman, J., Iskanderova, Z. and Tennyson, R.C. (1998), "Ion Implantation Protects Surfaces", *Advanced Materials and Processes*, pp. 26 – 30.
12. Kleiman, J.I., Iskanderova, Z.A., Gudimenko, Y.I., Morison, W.D. and Tennyson, R.C. (1999), "Polymers and Composites in the Low Earth Orbit Space Environment: Interaction and Protection", *Canadian Aeronautic and Space Journal*, vol. 45, no. 2, pp. 148 – 160.

13. Kleiman, J.I., Popov, O., Tong, A. and Molenda, D. (1996), "Development of High Diffuse Reflectance Surfaces on Teflon", April, 25 – 26, *in Proceedings of the ICPMSE–3 Conference, Publisher Kluwer Academic Publishers,* pp. 167 – 177.
14. Kleiman, J.I. and Gudimenko, Y. (1997), "Reduced Glare, High Diffuse Reflectance Teflon Surfaces for Improved Performance of Video Cameras on Canadian MSS For SS Alpha", *The 7–th International Symposium on Materials in a Space Environment, ENSAE–SUPAERO,* 16–20 June, Toulouse, Franc, pp. 419 – 425.
15. Kleiman, J.I., Iskanderova, Z. and Antoniazzi, J. (2009), Long Term Flight Performance of High Diffuse Reflectance Ag/Teflon Coverings Flown on Canadian Mobile Servicing Station, MSS, *Proceedings of the ISMSE–11 Symposium,* Aix-en-Provence, France, (available on CD), 15–18 September 2009.
16. Goudimenko, Y., Kleiman, J.I., Cool, G.R., Iskanderova, Z., Tennyson, R.C. (1999), *Modyfikatsiya pidzemnoyi oblasti polimeriv ta materialiv na osnovi vuhletsyu* [Modification of Subsurface Region of Polymers and Carbon-Based Materials], U.S., Pat. 5,948,484.
17. Iskanderova, Z., Kleiman, J.I., Goudimenko, Y., Cool, G.R., Tennyson, R.C. (1997B), *Modyfikatsiya poverkhni polimernykh ta vuhletsevykh materialiv shlyakhom ionnoyi implantatsiyi ta okyslyuval'noyi konversiyi* [Surface Modification of Polymer and Carbon-Based Materials by Ion Implantation and Oxidative Conversion], U.S., Pat. 5,683,757.
18. Iskanderova, Z., Kleiman, J.I. and Bussieres, F. (2015), *Sposib vyhotovlennya dysypatyvnykh poverkhon' zaryadiv z polimernykh materialiv z nyz'koyu temperaturoyu zalezhnosti oporu poverkhni ta nyz'kykh vtrat RF* [Method of Making Charge Dissipative Surfaces of Polymeric Materials with Low Temperature Dependence of Surface Resistivity and Low RF Loss], U.S., Pat. 9,174,396 B2.
19. Nömayr, Ch., Zimmermann, C., Iskanderova, Z., Kleiman, J. (2015), *Sposib vyhotovlennya poverkhnevoho sharu, shcho rozsiyuye zaryad* [Method for manufacturing a charge dissipative surface layer], Pat. PCT WO 2015/074758 Al.
20. Iskanderova, Z., Kleiman, J.I., Issoupov, V. and Bussieres, F. (2009), "CARBOSURF™ Surface Modification Technology for Charge Dissipative and Radio-Transparent GEO Durable Space Polymers", *in Proceedings of the 9th International Conference "Protection of Materials and Structures from Space Environment"*, Toronto, Canada, 20 – 23 May, 2008, ed. J.I. Kleiman, AIP Conference Proceedings 1087, 2009, pp. 588 – 599.