Chapter

Unmanned Ground Vehicles for Smart Farms

Pablo Gonzalez-De-Santos, Roemi Fernández, Delia Sepúlveda, Eduardo Navas and Manuel Armada

Abstract

Forecasts of world population increases in the coming decades demand new production processes that are more efficient, safer, and less destructive to the environment. Industries are working to fulfill this mission by developing the smart factory concept. The agriculture world should follow industry leadership and develop approaches to implement the smart farm concept. One of the most vital elements that must be configured to meet the requirements of the new smart farms is the unmanned ground vehicles (UGV). Thus, this chapter focuses on the characteristics that the UGVs must have to function efficiently in this type of future farm. Two main approaches are discussed: automating conventional vehicles and developing specifically designed mobile platforms. The latter includes both wheeled and wheel-legged robots and an analysis of their adaptability to terrain and crops.

Keywords: smart farm, precision agriculture, agricultural robot, unmanned ground vehicle, autonomous robot

1. Introduction

The world's human population increases by approximately 240,000 people every day: it is expected to reach 8 billion by 2025 and approximately 9.6 billion by 2050. Cultivated land is at a near-maximum, yet estimates predict that food production must be increased by 70% for worldwide peace to persist circa 2050 [1]. Thus, producing sufficient food to meet the ever-growing demand for this rising population is an exceptional challenge to humanity. To succeed at this vital objective, we must build more efficient—yet sustainable—food production devices, farms, and infrastructures. To accomplish that objective, the precision farming concept—a set of methods and techniques to accurately manage variations in the field to increase crop productivity, business profitability, and ecosystem sustainability—has provided some remarkable solutions.

Figure 1 summarizes the cycle of precision agriculture and distinguishes the activities based on analysis and planning (right) from those that rely on providing motion (left). The solutions for activities illustrated in **Figure 1** right are being based on information and communication technologies (ICT), whereas the activities on the left rely on tractors, essential devices in current agriculture, that are being automated and robotized and will be also critical in future agriculture (smart farms).

The activities indicated in **Figure 1** left can be applied autonomously in an isolated manner, i.e., a fertilization-spreading task, can be performed autonomously

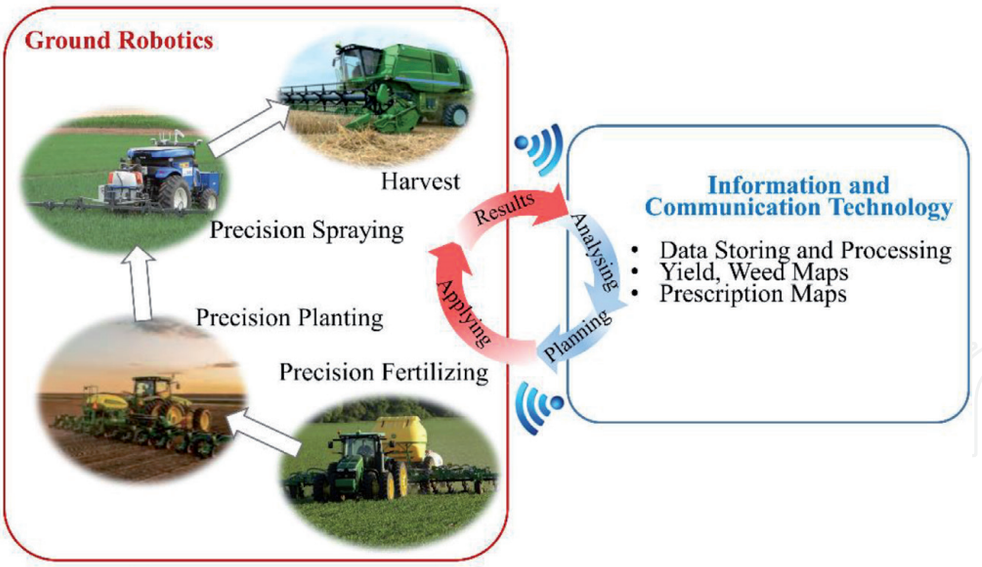

Figure 1.
UGVs in the cycle of precision agriculture.

if the appropriate implement tank has been filled with fertilizer and attached to a fueled autonomous tractor (UGV); the same concept is applicable to planting and spraying. In addition, harvesting systems must offload the yield every time their collectors are full. However, tasks such as refilling, refueling/recharging, implement attachment, and crop offloading are currently primarily performed manually. The question that arises is: would it be possible to automate all these activities? And if so, would it be possible to combine these activities with other already automated farm management activities to configure a fully automated system resembling the paradigm of the fully automated factory? Then, the combination becomes a fully automated farm in which humans are relegated to mere supervisors. Furthermore, exploiting this parallelism, can we push new developments for farms to mimic the smart factory model? This is the smart farm concept that represents a step forward from the automated farm into a fully connected and flexible system capable of (i) optimizing system performances across a wider network, (ii) learning from new conditions in real- or quasi-real time, (iii) adapting the system to new conditions, and (iv) executing complete production processes in an autonomous way [2]. A smart farm should rely on autonomous decision-making to (i) ensure asset efficiency, (ii) obtain better product quality, (iii) reduce costs, (iv) improve product safety and environmental sustainability, (v) reduce delivery time to consumers, and (vi) increase market share and profitability and stabilize the labor force.

Achieving the smart farm is a long-term mission that will demand design modifications and further improvements on systems and components of very dissimilar natures that are currently being used in agriculture. Some of these systems are outdoor autonomous vehicles or (more accurately) UGVs, which are essential in future agriculture for moving sensors and implementing to cover crop fields accurately and guarantee accurate perception and actuation (soil preparation, crop treatments, harvest, etc.). Thus, this chapter is devoted to bringing forward the features that UGVs should offer to achieve the smart farm concept. Solutions are focused on incorporating the new paradigms defined for smart factories while providing full mobility of the UGVs. These two activities will enable the definition of UGV requirements for smart farm applications.

To this end, the next section addresses the needs of UGVs in smart farms. Then, two main approaches to configure solutions for UGVs in agricultural tasks are described: the automation of conventional vehicles and specifically designed mobile

platforms. Their advantages and shortcomings regarding their working features are highlighted. This material enables the definition of other operating characteristics of UGVs to meet the smart farm requirements. Finally, the last section presents some conclusions.

2. UGV for agriculture

Ground mobile robots, equipped with advanced technologies for positioning and orientation, navigation, planning, and sensing, have already demonstrated their advantages in outdoor applications in industries such as mining [3], farming, and forestry [4, 5]. The commercial availability of GNSS has provided easy ways to configure autonomous vehicles or navigation systems to assist drivers in outdoor environments, especially in agriculture, where many highly accurate vehicle steering systems have become available [6, 7]. These systems aid operators in the precise guidance of tractors using LIDAR (light/laser detection and ranging) or GNSS technology but do not endow a vehicle or tool with any level of autonomy. Nevertheless, other critical technologies must also be incorporated to configure UGVs, such as the safety systems responsible for detecting obstacles in the robots' path and safeguarding humans and animals in the robots' surroundings as well as preventing collisions with obstacles or other robots. Finally, robot communications with operators and external servers (cloud technologies) through wireless communications that include the use of cyber-physical systems (CPSs) [8] and Internet of things (IoT) [9] techniques will be essential to incorporate decision-making systems based on big data analysis. Such integration will enable the expansion of decision processes into fields such as machine learning and artificial intelligence. Smart factories are based on the strongly intertwined concepts of CPS, IoT, big data, and cloud computing, and UGVs for smart farms should be based on the same principles to minimize the traditional delays in applying the same technologies to industry and agriculture.

The technology required to deploy more robotic systems into agriculture is available today, as are the clear economic and environmental benefits of doing so. For example, the global market for mobile robots, in which agricultural robots are a part, is expected to increase at a compound annual growth rate of over 15% from 2017 to 2025, according to recent forecast reports [10]. Nevertheless, manufacturers of agricultural machinery seem to be reluctant to commercialize fully robotic systems, although they have not missed the marketing potential of showing concepts [11, 12]. In any event, according to the Standing Committee on Agricultural Research [13], further efforts should be made by both researchers and private companies to invent new solutions.

Most of the robotics and automation systems that will be used in precision agriculture—including systems for fertilizing, planting, spraying, scouting, and harvesting (**Figure 1**)—will require the coordination of detection devices, agricultural implements, farm managing systems, and UGVs. Thus, several research groups and companies have been working on such systems. Specifically, two trends can be identified in the development of UGVs: the automation of conventional agricultural vehicles (tractors) and the development of specifically designed mobile platforms. The following sections discuss these two types of vehicles.

3. Automation of conventional vehicles

The tractor has been the central vehicle for executing most of the work required in a crop field. Equipped with the proper accessories, this machine can till, plant, fertilize, spray, haul, mow, and even harvest. Their adaptability to dissimilar tasks

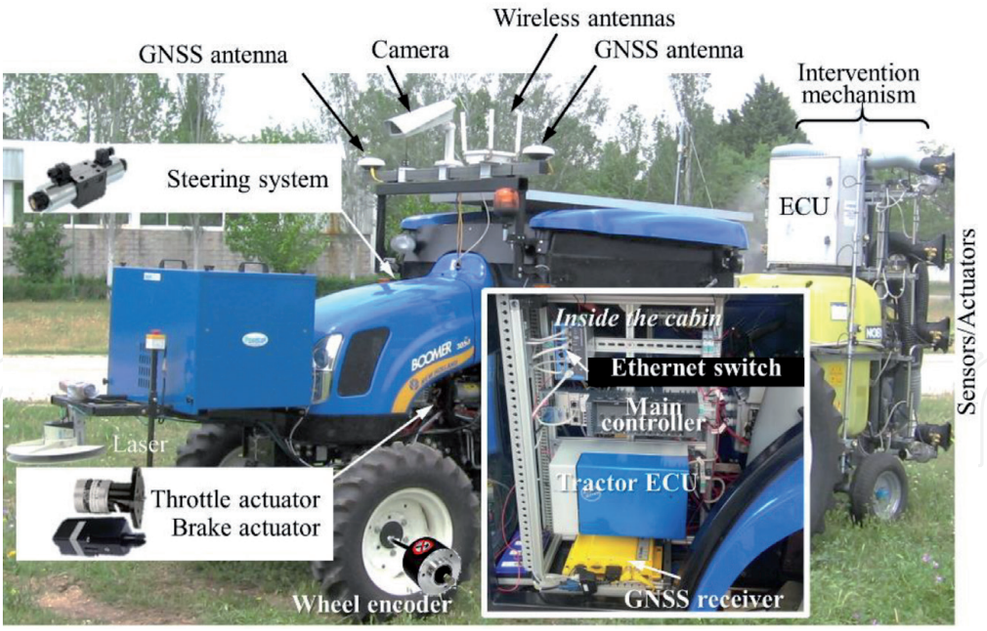

Figure 2.
An example of agricultural tractor automation-distribution of sensorial and actuation systems for transforming an agricultural tractor into a UGV (Gonzalez-de-Santos et al., 2017).

makes tractors a prime target for automation, which would enable productivity increases, improve safety, and reduce operational costs. **Figure 2** shows an example of the technologies and equipment for automating agricultural tractors.

Numerous worldwide approaches to automating diverse types of tractors have been researched and developed since 1995 when the first GNSS was made available to the international civilian community of users, which opened the door for GPS-guided agricultural vehicles (auto-steering) and controlled-traffic farming.

The first evaluations of GPS systems for vehicle guidance in agriculture were also published in 1995 [14] demonstrating its potential and encouraging many research groups around the world to automate diverse types of tractors. The earliest attempts were made at Stanford University in 1996, where an automatic control system for an agricultural tractor was developed and tested on a large farm [15]. The system used a location system with four GPS antennas. Around the same time, researchers at the University of Illinois, USA, developed a guidance system for an autonomous tractor based on sensor fusion that included machine vision, real-time kinematics GPS (RTK-GPS), and a geometric direction sensor (GDS). The fusion integration methodology was based on an extended Kalman filter (EKF) and a two-dimensional probability-density-function statistical method. This system achieved a lateral average error of approximately 0.084 m at approximately 2.3 m s^{-1} [16].

A few years later, researchers at Carnegie Mellon University, USA, developed some projects that made significant contributions. The Demeter project was conceived as a next-generation self-propelled hay harvester for agricultural operations, and it became the most representative example of such activity [17]. The positional data was fused from a differential GPS, a wheel encoder (dead reckoning), and gyroscopic system sensors. The project resulted in a system that allowed an expert harvesting operator to harvest a field once, thus programming the field. Subsequently, an operator with lesser skill could "playback" the programmed field at a later date. The semi-autonomous agricultural spraying project, developed by the same research group, was devoted to making pesticide spraying significantly cheaper, safer, and more environmentally friendly [18]. This system enabled a remote operator to oversee the nighttime operation of up to four spraying vehicles. Another example is research conducted at the University of Florida, USA, [19], in

which two individual autonomous guidance systems for use in a citrus grove were developed and tested along curved paths at a speed of approximately 3.1 m s^{-1}. One system, based on machine vision, achieved an average guidance error of approximately 0.028 m. The other system, based on LIDAR guidance, achieved an average error of approximately 0.025 m.

Similar activities started in Europe in the 2000s. One example is the work performed at LASMEA-CEMAGREF, France, in 2001, which evaluated the possibilities of achieving recording-path tracking using a carrier phase differential GPS (CP-DGPS), as the only sensor. The vehicle heading was derived according to a Kalman state reconstructor and a nonlinear velocity independent control law was designed that relied on chained systems properties [20].

A relevant example of integrating UGVs with automated tools is the work conducted at the University of Aarhus and the University of Copenhagen, Denmark [21]. The system comprised an autonomous ground vehicle and a side shifting arrangement affixed to a weeding implement. Both the vehicle and the implement were equipped with RTK-GPS; thus, the two subsystems provided their own positions, allowing the vehicle to follow predefined GPS paths and enabling the implement to act on each individual plant, whose positions were automatically obtained during seeding.

Lately, some similar automations of agricultural tractors have been conducted using more modern equipment [22, 23], and some tractor manufacturers have already presented noncommercial autonomous tractors [11, 12]. This tendency to automate existing tractors has been applied to other types of lightweight vehicles for specific tasks in orchards such as tree pruning and training, blossom and fruit thinning, fruit harvesting, mowing, spraying, and sensing [24]. **Table 1** summarizes the UGVs based on commercial vehicles for agricultural tasks.

Institution	Year	Description
Stanford University (USA) [15]	1996	Automatic large-farm tractor using 4 GPS antennas
University of Illinois (USA) [16]	1998	A guidance system using a sensor based on machine vision, an RTK-GPS, and a GDS
Carnegie Mellon University (USA)—Demeter project [17]	1999	A self-propelled hay harvester for agricultural operations
Carnegie Mellon University (USA)—Autonomous Agricultural Spraying project [18]	2002	A ground-based vehicles for pesticide spraying
LASMEA-CEMAGREF (France) [20]	2001	This study investigated the possibility of achieving vehicle guiding using a CP-DGPS as the only sensor
University of Florida (USA) [19]	2006	An autonomous guidance system for citrus groves based on machine vision and LADAR
University of Aarhus and the University of Copenhagen (Denmark) [21]	2008	An automatic intra-row weed control system connected to an unmanned tractor
RHEA consortium (EU) [22]	2014	A fleet (3 units) of tractors that cooperated and collaborated in physical/chemical weed control and pesticide applications for trees
Carnegie Mellon University (USA) [24]	2015	Self-driving orchard vehicles for orchard tasks
University of Leuven (Belgium) [23]	2015	Tractor guidance using model predictive control for yaw dynamics

Table 1.
UGVs based on commercial vehicles.

Nevertheless, UGVs suitable for agriculture remain far from commercialization, although many intermediate results have been incorporated into agricultural equipment—from harvesting to precise herbicide application. Essentially, these systems are installed on tractors owned by farmers and generally consist of a computer (the controller), a device for steering control, a localization system (mostly based on RTK-GPS), and a safety system (mostly based on LIDAR). Many of these systems are compatible only with advanced tractors that feature ISOBUS control technology [25], through which controllers connected to the ISOBUS can access other subsystems of the tractor (throttle, brakes, auxiliary valves, power takeoff, linkage, lights, etc.). Examples of these commercial systems are AutoDrive [26] and X-PERT [27].

An important shortcoming of these solutions is their lack of intelligence in solving problems, especially when obstacles are detected because they are not equipped with technology suitable for characterizing and identifying the obstacle type. This information is essential when defining any behavior other than simply stopping and waiting for the situation to be resolved. Another limitation of this approach is that the conventional configuration of a standard tractor driven by an operator is designed to maximize the productivity per hour; thus, the general architecture of the system (tractor plus equipment) is only roughly optimized.

4. Specifically designed mobile platforms

The second approach to the configuration of mobile robots for agriculture is the development of autonomous ground vehicles with specific morphologies, where researchers develop ground mobile platforms inspired more by robotic principles than by tractor technologies. These platforms can be classified based on their locomotion system. Ground robots can be based on wheels, tracks, or legs. Although legged robots have high ground adaptability (that enables the vehicles to work on irregular and sloped terrain) and intrinsic omnidirectionality (which minimizes the headlands and, thus, maximizes croplands) and offer soil protection (discrete points in contact with the ground that minimize ground damage and ground compaction, an important issue in agriculture), they are uncommon in agriculture; however, legged robots provide extraordinary features when combined with wheels that can configure a disruptive locomotion system for smart farms. Such a structure (which consists of legs with wheels as feet) is known as a wheel-legged robot. The following sections present the characteristics, advantages, and disadvantages of these specifically designed types of robots.

4.1 Wheeled mobile robots

4.1.1 Structures of wheeled robots

The structure of a wheeled mobile platform depends on the following features:

Number of wheels: Three nonaligned wheels are the minimum to ensure platform static stability. However, most field robots are based on four wheels, an approach that increases the static and dynamic stability margins [28].

Wheel orientation type: An ordinary wheel can be installed on a platform in different ways that strongly determine the platform characteristics. Several wheel types can be considered:

a. **Fixed wheel**: This wheel is connected to the platform in such a way that the plane of the wheel is perpendicular to the platform and its angle (orientation) cannot change.

b. **Orienting wheel**: The wheel plane can change its orientation angle using an orientation actuator.

c. **Castor wheel**: The wheel can rotate freely around an offset steering joint. Thus, its orientation can change freely.

Wheel power type: Depending on whether wheels are powered, they can also be classified as follows:

a. Passive wheel: The wheel rotates freely around its shaft and does not provide power.

b. Active wheel: An actuator rotates the wheel to provide power.

Wheel arrangement: Different combinations of wheel types produce mobile platforms with substantially different steering schemes and characteristics.

a. Coordinated steering scheme: Two fixed active wheels at the rear of the platform coupled with two passive orienting wheels at the front of the platform are the most common wheel arrangement for vehicles. To maintain all wheels in a pure rolling condition during a turn, the wheels need to follow curved paths with different radii originating from a common center [29]. A special steering mechanism, the Ackermann steering system, which consists of a 4-bar trapezoidal mechanism (**Figure 3a**), can mechanically manage the angles of the two steering wheels. This system is used in all the vehicles presented in **Table 2**. It features medium mechanical complexity and medium control complexity. One advantage of this system is that a single actuator can steer both wheels. However, independent steering requires at least three actuators for steering and power (**Figure 3b**).

b. Skid steering scheme: Perhaps the simplest structure for a mobile robot consists of four fixed, active wheels, one on each corner of the mobile platform. Skid steering is accomplished by producing a differential thrust between the left

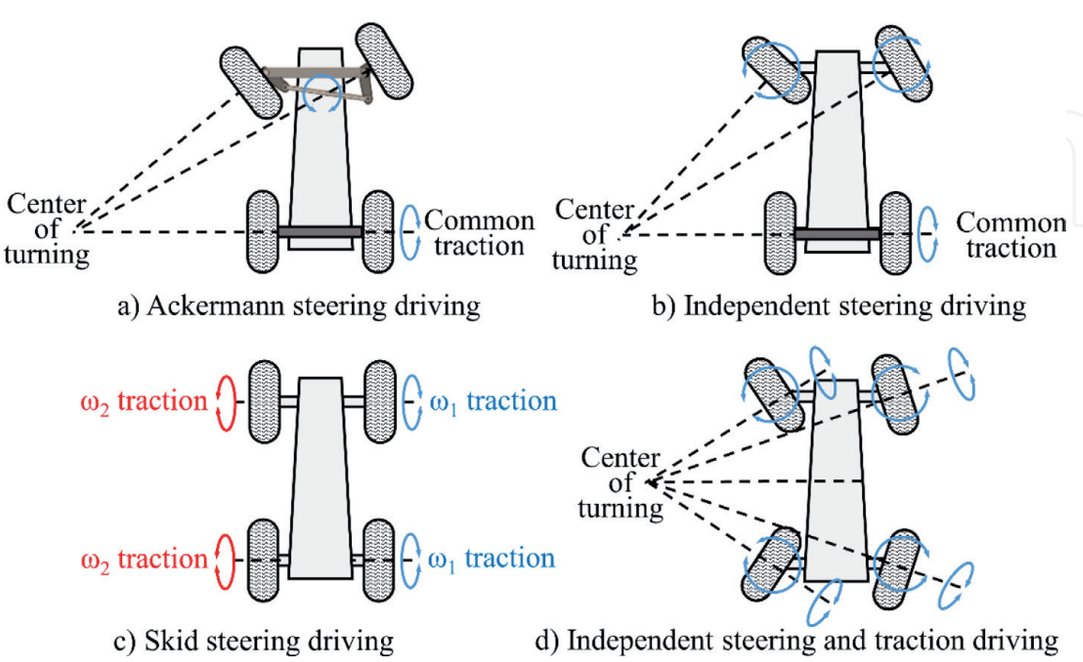

Figure 3.
Steering driving systems: (a) Ackermann steering system; (b) independent steering; (c) skid steering system and (d) independent steering and traction system.

and right sides of the vehicle, causing a heading change (**Figure 3c**). The two wheels on one side can be powered independently or by a single actuator. Thus, the motion of the wheels in the same direction produces backward/forward platform motion; and the motion of the wheels on one side in the opposite direction to the motion of wheels on the other side produces platform rotation.

c. Independent steering scheme: An independent steering scheme controls each wheel, moving it to the desired orientation angle and rotation speed (**Figure 3d**). This steering scheme makes wheel coordination and wheel

Steering scheme	Characteristics
Coordinated	Advantages: • Simplicity. • Few actuators (2) if based on the Ackermann device. • Good turning accuracy if the front wheels are steered independently. Disadvantages: • Large turning radii. • Ideal rotation in only three steering angles if based on the Ackermann device. • Requires three actuators and more complex control algorithms if based on front wheels steered independently. • Steering control on loose grounds, e.g., after plowing, is difficult. Use in smart farms: • New mobile robotic designs are abandoning this scheme, which only offers simplicity. Hence, such steering control is not expected to be used in smart farms.
Skid	Advantages: • Compact size, robustness, few parts. • Agility (motion with heading control and zero-radius turns). • Few actuators (2). Disadvantages: • The maximum forward thrust is not maintained during turns. • Terrain irregularities and tire-soil effects demand unpredictable power supply. • Vehicle rotations erode the ground and wore the tires. Use in smart farms: • This steering scheme is simple and robust, but not very precise in loose terrain; hence, it could be used in smart farms, e.g., for indoor tasks, but not for infield tasks.
Independent	Advantages: • Full mobility (including crab motion). Disadvantages: • Many actuators and parts (eight for a four-wheel robot). • Complex control algorithms. Use in smart farms: • This steering scheme is the more versatile of the schemes, but it is also more complex and expensive. However, most of the engineering systems evolve by increasing their sophistication and robustness while decreasing their cost; hence, this scheme will be intensively used in smart farms.

Table 2.
Characteristics of wheeled structures.

position accuracy more complex but provides some advantages in maneuverability. In addition, this scheme provides crab steering (sideways motion at any angle α; $0 \leq \alpha \leq 2\pi$) by aligning all wheels at an angle α with respect to the longitudinal axis of the mobile platform. Finally, the coordination of driving and steering results in more efficient maneuverability and reduces internal power losses caused by actuator fighting. The independent steering scheme requires eight actuators for a four-wheel vehicle.

Table 2 summarizes the advantages and drawbacks of these schemes. Note that the number of actuators increases the total mass of a robot as well as its mechanical and control complexity (more motors, more drivers, more elaborate coordinating algorithms, etc.).

4.1.2 Examples of wheeled robots

Some examples of wheeled mobile platforms for agriculture are the conventional tractor using the Ackermann steering system (**Figure 2**) with two front passive and steerable wheels and two rear fixed and active wheels.

Skid steering platforms can be found in many versions. For example,

- Four fixed wheels placed in pairs on both sides of the robot
- Two fixed tracks, each one placed longitudinally at each side of the robot,
- Two fixed wheels placed at the front of the robot and two castor wheels placed at the rear (**Figure 4c**), etc.

Regarding the independent steering scheme, the robot developed by Bak and Jakobsen [30] is one of the first representative examples (**Figure 4a**). This platform was designed specifically for agricultural tasks in wide-row crops and featured good ground clearance (approximately 0.5 m) and 1-m wheel separation. The platform is based on four-identical wheel modules. Each one includes a brushless electric motor that provides direct-drive power, and steering is achieved by a separate motor.

An example of a mobile platform under development that focuses on performing precision agricultural tasks is AgBot II (**Figure 4c**). This is a platform that follows the skid steering scheme with two front fixed wheels (working in skid or differential mode) and two rear caster wheels. It is intended to work autonomously on both large-scale and horticultural crops, applying fertilizer, detecting and classifying weeds, and killing weeds either mechanically or chemically [31, 32]). Another robot is Robot for Intelligent Perception and Precision Application (RIPPA), which is a light, rugged, and easy-to-operate prototype for the vegetable growing industry. It is used for autonomous high-speed, spot spraying of weeds using a directed micro-dose of liquid when equipped with a variable injection intelligent precision applicator [33]. Another example is Ladybird (**Figure 4b**), an omnidirectional robot powered with batteries and solar panels that follows the independent steering scheme. The robot includes many sensors (i.e., hyperspectral cameras, thermal and infrared detecting systems, panoramic and stereovision cameras, LIDAR, and GPS) that enable assessing crop properties [34]. One more prototype, very close to commercialization, is Kongskilde Vibro Crop Robotti, which is a self-contained track-based platform that uses the skid steering scheme. It can be equipped with implements for precision seeding and mechanical row crop cleaning units. This robot can work for 2–4 hours at a 2–5 km h^{-1} rate and is supplied by captured electric energy [35].

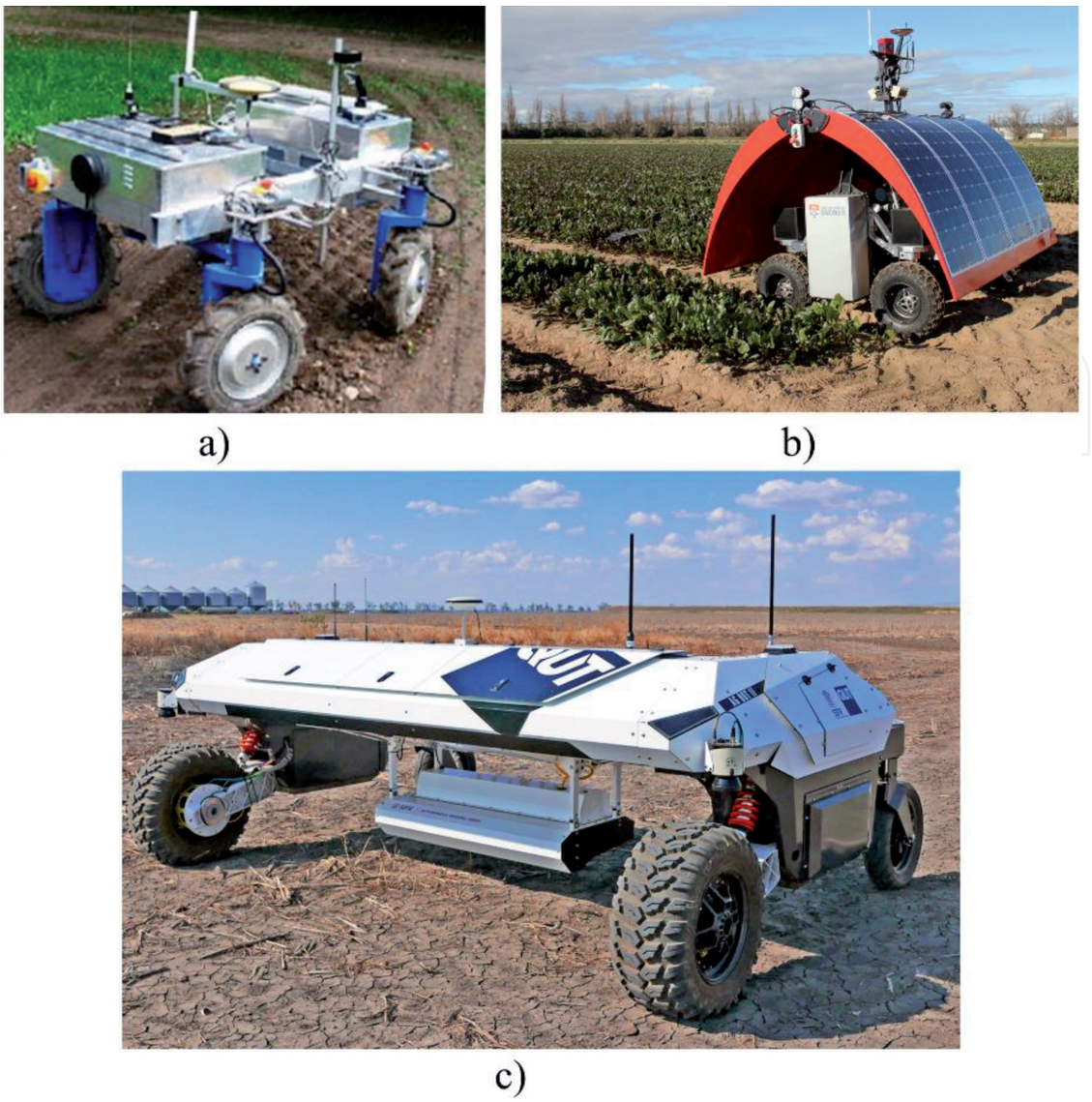

Figure 4.
Pictures of several specifically-designed agricultural platforms. (a) Robot for weed detection, courtesy of T. Bak, Department of Agricultural Engineering, Danish Institute of Agricultural Sciences; (b) ladybird, courtesy of J. P. Underwood, Australian Centre for Field Robotics at the University of Sydney [34]; (c) AgBot II, courtesy of O. Bawden, strategic Investment in Farm Robotics, Queensland University of Technology [31].

These robots are targeted toward fertilizing, seeding, weed control, and gathering information, and they have similar characteristics in terms of weight, load capacity, operational speed, and morphology. Tools, instrumentation equipment, and agricultural implements are connected under the robot, and tasks are performed in the area just below the robot, which optimizes implement weight distribution. These robots have limitations for use on farmland with substantial (medium to high) slopes or gully erosion. Nevertheless, some mobile platforms are already commercially available. Two examples of these vehicles are the fruit robots Cäsar [36] and Greenbot [37].

Cäsar is a remote-controlled special-purpose vehicle that can perform temporarily autonomous operations in orchards and vineyards such as pest management, soil management, fertilization, harvesting, and transport. Similarly, Greenbot is a self-driving machine specially developed for professionals in the agricultural and horticultural sectors who perform regular, repetitious tasks. This vehicle can be used not only for fruit farming, horticulture, and arable farming but also in the urban sector and even at waterfronts or on roadsides.

Despite their current features, the existing robots lack flexibility and terrain adaptability to cope with diverse scenarios, and their safety features are limited. For example:

- They focus only on orchard and vineyard activities.
- They have ground clearance limitations.
- They are unsuitable for rough terrain or slopes.
- They must be manually guided to the working area rather than freely and autonomously moving to different working areas around the farm.
- They possess no advanced detection systems for weed or soil identification, which limits their use to previously planned tasks related to selective treatment.
- They lack dynamic safety systems capable of recognizing or interpreting safety issues; thus, they are incapable of rescheduling or solving problems by themselves.

In addition, existing UGVs for agriculture lack communication mechanisms for providing services through cloud technologies, CPS, and IoT techniques, crucial instruments to integrate decision-making systems based on big data analysis, as is being done in the smart factory concept.

Table 3 summarizes the diverse robotic platforms, and **Figure 4** depicts some of these platforms.

4.2 Wheel-legged robots

4.2.1 Structures of wheel-legged robots

The structure of a wheel-legged mobile platform depends on (i) the number of legs, (ii) the leg type, and (iii) the leg arrangement. The feet consist of 2-DOF steerable powered wheels as illustrated in **Figure 5**.

Number of legs: The minimum number of legs required for statically stable walking is four-three legs providing support in the form of a stable tripod while the other leg performs the transference phase [38]. Combining sequences of leg

Vehicle	Type*	Year	Description
AgBot II [32]	P	2014	A platform that follows the skid steering scheme with two front fixed wheels (working in skid or differential mode) and two rear caster wheels
Ladybird [34]	P	2015	An omnidirectional robot powered with batteries and solar panels that uses the independent steering scheme
Greenbot [37]	C	2015	A self-driving robot for tasks in agriculture and horticulture
Cäsar [36]	P	2016	A remotely controlled platform for temporary, autonomous use in fruit plantations and vineyards
RIPPA [33]	P	2016	A light, rugged, and easy-to-operate prototype for the vegetable growing industry
Vibro Crop Robotti [35]	C	2017	A self-contained track-based platform that uses the skid steering scheme

**) P-prototype; C-commercial.*

Table 3.
Robots designed specifically for agriculture.

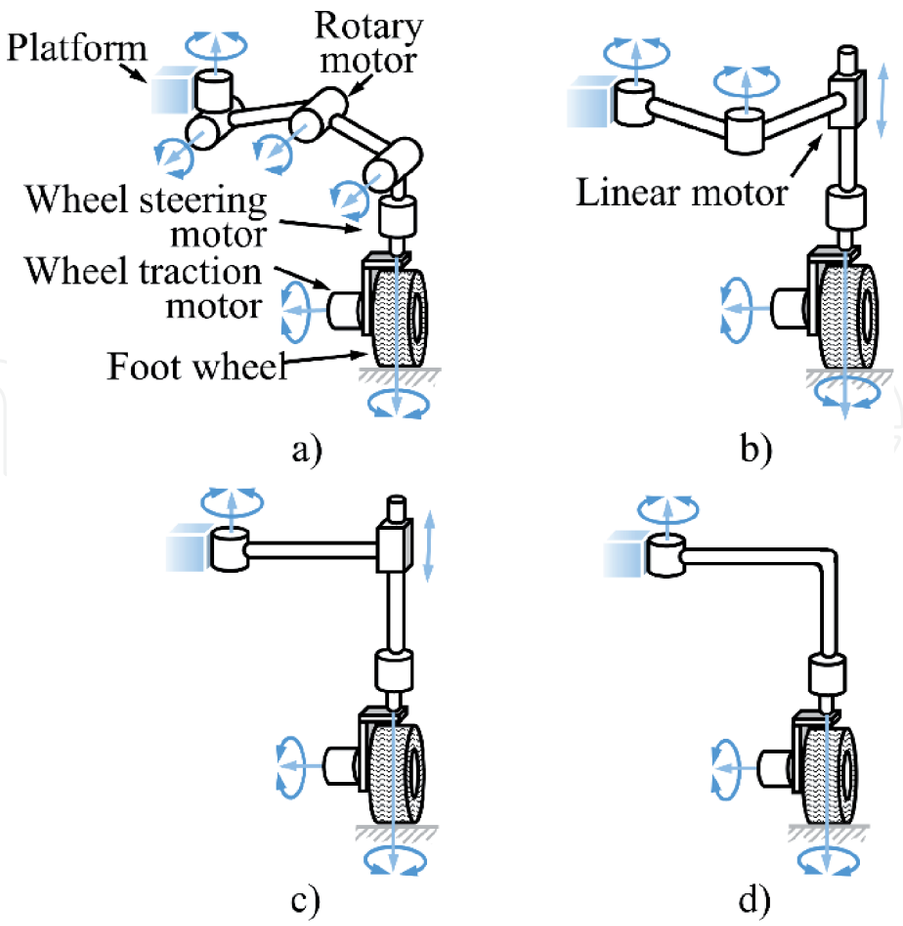

Figure 5.
Wheel-legged structures. (a) 4-DOF articulated leg; (b) 3-DOF SCARA leg; (c) 2-DOF SCARA leg; (d) 1-DOF leg.

transferences with stable tripods produce a walking motion. A wheel-legged robot requires only three legs for translational motion, which provides additional terrain adaptation.

Leg type: Legs are based on the typical configurations of manipulators; thus, articulated, cylindrical, Cartesian, and pantographic configurations are the types used most often.

Leg arrangement: The normal arrangement for a $2n$-legged robot is to distribute n legs uniformly on the longitudinal sides. Four-legged structures present some advantages regarding terrain adaptability, ground clearance, and track width control (crop adaptability) but also have some drawbacks, such as additional mechanical complexity (complex joints designs, including actuators and brakes) and control of redundant actuated systems, which exhibit complex interactions with the environment and make motion control more difficult than that of conventional wheeled platforms. **Table 4** illustrates different theoretical wheel-legged structures.

4.2.2 Examples of wheel-legged robots

Figure 6a illustrates the structure scheme of a wheel-legged robot based on the 3-DOF SCARA leg (See **Figure 5b**) with full terrain adaptability, ground clearance control, crop adaptability, and capability of walking, and **Figure 6b** shows the structure of a wheel-legged robot exhibiting full terrain adaptability, ground clearance control, and crop adaptability; however, it cannot walk under static stability.

Another interesting example is the structure of BoniRob [39], a real wheel-legged platform for multipurpose agriculture applications, which consists of four independently steerable powered wheeled legs with the structure illustrated in **Figure 5d** (1-DOF legs with a 2-DOF wheeled foot). This robot can adjust the distance between its wheel sets, making it adaptable to many agricultural scenarios. The platform can be equipped with common sensorial systems used in robotic agricultural applications, such as LIDAR, inertial sensors, wheel odometry, and GPS. Moreover,

Structure	Characteristics
A 4-DOF articulated leg with a 2-DOF wheeled foot (**Figure 5a**)	Advantages: • Full terrain adaptability and ground clearance control. • Crop control. • Full capability for walking. Disadvantages: • A huge number of actuators (24) that jeopardize the robot's reliability. Use in smart farms: • This structure is the most complex structure that exhibits complete wheel positioning and orientation in its working volume. However, the orientation of the wheel does not provide additional characteristics regarding stability or traction. Thus, this structure provides the same advantages as other structures (see **Figure 5c**) but with extra complexity, which will jeopardize its application in smart farms. This structure is presented here as the most complex platform.
A 3-DOF motion-decoupled leg* with a 2-DOF wheeled foot (**Figure 5b**)	Advantages: • Full terrain adaptability and ground clearance control. • Crop adaptability. • Full capability for walking. Disadvantages: • A large number of actuators (20). Use in smart farms: • This structure provides full positioning of the wheel in its working volume and can control the robot's body leveling, which allows for the wheel plane to be aligned with gravity, which provides an excellent robot's stability using fewer motors than the structure illustrated in **Figure 5a**. In addition, this structure can walk under static stability, an interesting feature when the robot works in very irregular, soft, or muddy terrain. Its terrain adaptability, ground clearance control, and crop adaptability, along with its medium complexity, make this structure the most promising for use in smart farms in the long term.
A 2-DOF motion-decoupled leg* with a 2-DOF wheeled foot (**Figure 5c**)	Advantages: • A medium number of actuators (16). • Full terrain adaptability and ground clearance control. • Crop adaptability. Disadvantages: • Limitations for walking. Use in smart farms: • This structure can control the ground clearance, leveling, and distance between wheels; the latter determines the adaptation to different crops (distance between crop rows). Nevertheless, the wheel moves on a vertical-cylindrical surface rather than in a working volume. This fact impedes the robot from walking and, thus, exhibits worse characteristics than the structure illustrated in **Figure 5b**. In any case, it can be a proper structure to introduce wheel-legged vehicles and could be used in the short term.

Structure	Characteristics
A 1-DOF leg with a 2-DOF wheeled foot (**Figure 5d**)	Advantages: • A small number of actuators (12). • Crop adaptability. Disadvantages: • No terrain adaptability or ground clearance control. • Limitations for walking. Use in smart farms: • This structure has no capabilities for walking or controlling the ground clearance of the vehicle or its leveling. However, the structure is simple and could be used as an introductory robot structure for smart farms in the short term.

**Cylindrical, Selective Compliant Articulated Robot Arm (SCARA) or Cartesian.*

Table 4.
Wheel-legged structures.

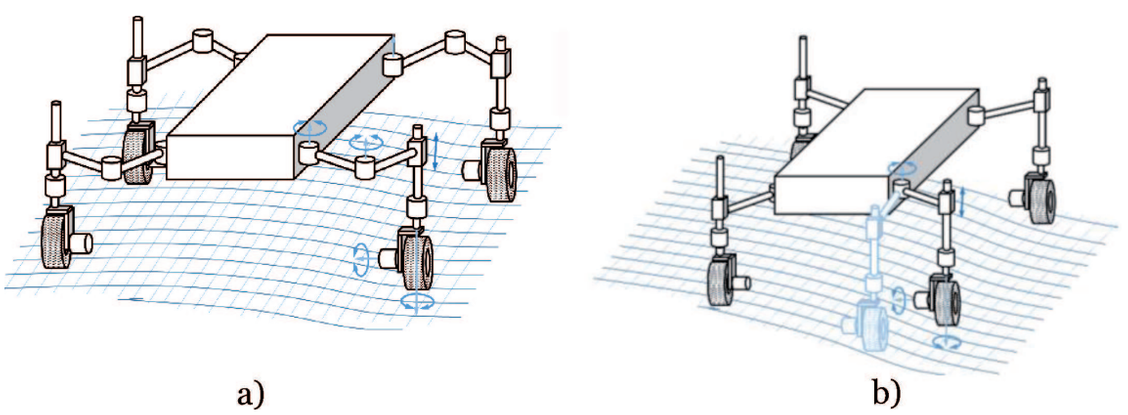

Figure 6.
Model of wheel-legs: (a) full terrain-crop adaptability, (b) full terrain and partial crop adaptability.

the robotic platform can be retrofitted and upgraded with swappable application modules or tools for crop and weed identification, plant breeding applications, and weed control. This robotic platform is completely powered by electricity, which is more environmentally friendly but reduces its operational working time compared to conventional combustion-engine systems. Nevertheless, this robot configuration requires custom-built implements, which prevent the reuse of existing implements and, thus, jeopardize the introduction of this robot to the agricultural market.

5. Smart farm UGV characteristics

In addition to their needed characteristics for infield operations, the robots fulfilling the demands of a smart farm will require the operating requirements summarized in the following paragraphs and **Table 5**.

Small size: The idea that using small robots provides many advantages over the use of conventional large vehicles has been widely discussed over the past decade [22, 40]. It is broadly accepted that although several small robots can cost the same as a large machine and accomplish the same amount of work, using small robots allows a multi-robot system to continue a task even if a number of robots fail (re-planning the task). Moreover, the reduced weight of the small robots reduces terrain compaction and allows farmers to acquire robots incrementally.

Characteristics	Value
Dimensions	Length: ~3.0 m; width: ~1.50 m; height:~1.00 m
Weight	1200–1700 kg
Payload	500–1000 kg
Comments: These characteristics are estimations based on the current medium-sized vehicles reported in this chapter that are capable of carrying agricultural implements. Robots for carrying sensing systems can be truly small (low payloads), but vehicles for treatments need to carry medium to heavy loads (pesticides, fertilizes, etc.). For example, existing sprayers [45] weigh approximately 600–700 kg including 200–300 L of active ingredient.	
Speed	3–25 km h^{-1}
Comments: Treatment speed is limited by the treatment process that depends on physical laws. However, robots need to move among working fields minimizing moving time; therefore, they must feature a reasonably high top speed.	
Position accuracy	±0.02 m
Comments: The current DGPS accuracy seems to be sufficient for real applications. However, specific real-time localization systems, RTLS, can be used in small areas where GNSS is unavailable (radio frequency identification tags (RFID), ultra-wide band tags (UWB), etc.). These technologies will be essential in smart farms to ensure positioning precision in GNSS occluded areas.	
Clearance	0.35–1 m
Comments: Weed control is performed at an early crop-growth stage; therefore, the minimum ground clearance of the robot must be approximately 0.35 m. A ground clearance of approximately 1 m will facilitate application of treatments at later crop-growth stages. The ideal approach would be to control the ground clearance to optimize the working height of the implements based on the crop. Existing robots cannot control their ground clearance, but some wheel-legged configurations can meet this specification (**Figure 5a, b**, and **c**).	
Track width	1.50–2.25 m
Comments: To preserve crops in narrow-row situations, a tramline control is required; however, in wide-row crops, the tramlines must be located in the inter-row spacing. Taking maize as an example, which is planted at an inter-row spacing of approximately 0.75 m in some areas in Europe, a robot track width of 1.50 to 2.25 m is required to enable 2 or 3 rows to pass under the robot's body. Controlling robot track width is imperative in a smart farm world. This characteristic is exhibited by wheeled-legged robots, which makes them a good candidate for UGVs in smart farms.	
Energetic autonomy	~10 h
Comments: Robots based on combustion engines (e.g., tractors) can operate autonomously for approximately 10 hours, at minimum. The duration of autonomous operation for electrically driven systems should be similar. Some existing prototypes already meet this expectation [31]. In any case, the increasing improvement in battery technology will enlarge the energetic autonomy of future vehicles and robots.	

Table 5.
Prospective characteristics for UGVs in smart farms.

Flexibility: Agricultural robots must be capable of adapting to many different scenarios (e.g., crops, row types, etc.) and tasks (e.g., plow, sow, fumigate, etc.). Thus, the robots must also be able to accommodate different agricultural implements, which should attach to or connect to (respectively, detach or disconnect from) the robots automatically.

Although conventional tractors are proven and highly reliable machines, they lack some adaptability features. Tractors have normally fixed distances between wheels, which makes them unsuitable for working on crops with different distances between rows. Using mobile platforms capable of controlling the distance between wheels could alleviate this problem, allowing the machines to adapt to different crops under different situations.

Maneuverability: Robots must be capable of performing small radius turns while adapting to different terrain. This last feature requires independent vertical control of wheels with respect to the robot's body.

A steering system capable of zero-radius turns would be a proper solution, and this feature can be implemented by different structures as discussed in the previous section. Thus, minimization of headlands and wheel distance control can be achieved using either conventional or new articulated structures. Among the conventional structures, the skid steering scheme based on wheels or tracks is capable of zero-radius turns without additional steering mechanism, which helps in minimizing the headlands. However, separating and controlling the distance between contralateral wheels/tracks requires an active system (which already exists for some tracked vehicles used in the building industry).

Mobile platform structures based on coordinated or independent steering schemes can achieve zero-radius turns, but they still lack intrinsic track width control and require additional mechanisms. Another structure is the wheel-legged mechanism. Legged robots exhibit high terrain adaptability on irregular ground, but wheeled robots have speed advantages on smooth terrain; that is, they complement each other. Therefore, the most complete wheel-legged mechanism (**Figure 6a**) is a leg with three degrees of freedom [38] with an active wheel as a foot, where the wheel is steered and driven separately. This is a disruptive design not verified yet that will provide extraordinary characteristics to robots for smart farm applications. Thus, the wheels drive and steer, while the legs provide track-width control and terrain adaptation, i.e., they control the robot's body leveling and ground clearance. This is the most capable system regarding ground clearance and body pose control, but it comes at the cost of higher mechanical complexity. Nevertheless, intermediate solutions can be developed to reduce the number of actuators while maintaining appropriate robot characteristics. **Table 4** summarizes different wheel-legged theoretical solutions indicating advantages and shortcomings, and **Figure 5** shows some sketches of practical solutions.

Resilience: Resilience is the ability to recover from malfunctions or errors. Initializing complex robots is a time-consuming procedure, especially when several robots are collaborating on the same task. Agricultural mobile robots must be resilient enough to ensure profitability. Thus, they must be easily shut down and started up (essential for error recovery); moreover, they must facilitate changing between manual operation mode and autonomous operation mode and vice versa.

Efficiency: UGV should be more efficient than conventional, manned solutions. This can be accomplished by systems that:

- Minimize energy consumption by optimizing the robot trajectories during the mission
- Drastically reduce the use of herbicides and fertilizers by using intelligent detection systems, tools, and decision-making algorithms
- Eliminate the need for a driver and minimize operator risk
- Minimize unnecessary crop damage and soil compaction

Friendly human-machine interfaces (HMI): A friendly interface is required to facilitate the introduction of robots into agriculture and to achieve profitability. Intuitive, reliable, comfortable, and safe HMIs are essential for farmers to accept robotic systems. The HMIs should be implementable on devices such as smartphones and tablets.

Communications: Communications in the smart farm must capitalize on CPS and IoT to collect sufficient data to take advantage of the big data techniques and enable communication with the cloud for use via different services (software as a service, platform as a service, and infrastructure as a service) offered by cloud providers [41].

Wireless communications with the operator and/or a central controller for control commands and data exchanges, including images and real-time video, will be required. Wireless communication among robots will also be required for coordination and collaboration.

Standardization of mechanical and electrical/electronic interfaces: Commercial equipment must comply with well-defined standards and homologous procedures before adoption by industry. Subsystems such as LIDAR units, computers, and wireless or Internet communication (4G/5G) devices and GNNS receivers and antennas are already off-the-shelf components, but mobile platforms must also cope with some standards related to agricultural machinery [25, 42].

Safety: Safety systems for agricultural robots must focus on three stages: (i) safety to humans, (ii) safety to crops, and (iii) safety to the robots themselves.

Safety for humans and robots can usually be accomplished through a combination of computer vision, LIDAR, and proximity sensors to infer dangerous situations and halt robot motion, whereas safety to crops is achieved through precise steering that guides the robot to follow the crop rows accurately using the crop position acquired at seeding time or real-time crop-detection systems. Following these three stages, a step forward in safety for agricultural robots would be the integration of a two-level safety system relying on the following:

- **A low-level safety system** that detects short-range obstacles with the purpose of avoiding imminent collisions. This level should be implemented within the robot controller and based on commercial components.

- **A high-level safety system** that detects and discriminates obstacles at an adequate distance to allow the robotic system to make decisions (i.e., re-planning a trajectory). This level should include vision, infrared, and hyperspectral cameras that provide information about the surroundings. Optical flow methods should be applied to detect obstacles in motion and compute their speed and direction to predict potential collisions [43]. Hence, optical sensors should track obstacles and their movements, dynamically compute safe zones, and adjust a robot's speed and direction of movement according to the given situation.

Regardless of the exact approach, standards on safety machinery must be taken into consideration [42] to ensure that systems will meet regulations and will be able to achieve certification.

Environmentally friendly impact: Both intervention mechanisms (implements) and mobile robots must be environmentally friendly (e.g., use fewer chemicals and cause less soil compaction) while improving the efficiency of the agricultural processes (i.e., reduce chemical costs while equaling or improving production). In addition, current agricultural vehicles use fossil fuels that emit large amounts of pollutants into the air such as carbon dioxide (CO_2), nitrogen oxide (NOX), carbon monoxide (CO), and hydrocarbon (HC) [44]. Furthermore, fuel can be spilled onto the ground, which is a long-term pollutant. These elements alter the environment and damage the ecosystem. One possible solution—envisaged as the likely future solution—is the use of electric vehicles.

Implements: The use of the conventional three-point hitch to attach implements to tractors should be changed as robots are introduced into agriculture. Instead, implements should be aligned with the robot's center of gravity to optimize the

payload distribution and minimize compaction. Mechanical attachment and electrical connection to the implement should be automated. The definition of these types of interfaces is a pending issue; nevertheless, an intermediate solution allowing the use of both new and conventional attachment devices (three-point hitch) will facilitate the gradual introduction of robotic systems into the agricultural sector. Obviously, developing new robots and adapting existing implements to a new attachment/connection system is the only way to introduce the robots to real applications.

HMI: An HMI for operators to communicate with robots should be implementable on portable equipment (smartphones, tablets, etc.). Operators will use such devices to send commands and receive responses and data. Moreover, an additional device—an emergency button that works using radio signals—must be provided to stop the robots from malfunctioning or unsafe situations. These interfaces must be true user-friendly devices to be operated by farmers rather than by engineers, which is a vital aspect for the introduction of robotics into agriculture, as it is for industry and services.

Autonomy: Two basic types of autonomies will be needed in smart farms: behavioral autonomy and operational autonomy. Behavioral autonomy is primarily associated with autonomous robots and relies on artificial intelligence techniques. It refers to the robot's ability to deal with uncertainty in its environment to accomplish a mission. Operational autonomy is associated with the tasks the robot has to accomplish autonomously to become a UGV, i.e., the tasks required for the robot to work continuously without human intervention: refueling or recharging (energetic autonomy, see **Table 5**), herbicide/pesticide refilling, implement attaching, and crop offloading. These tasks, which can be solved using current automatic techniques, are currently being done with human intervention and should be fully automated in the smart farms.

Based on the existing agricultural vehicles and robot prototypes, robots to be deployed in smart farms should meet also the characteristics presented in **Table 5**.

6. Conclusions

The world population is increasing rapidly, causing a demand for more efficient production processes that must be both safe and respect the ecosystem. Industry has already planned to meet production challenges in the coming decades by defining the concept of the smart factory; the agriculture sector should follow a similar path to design the concept of the smart farm: a system capable of optimizing its performance across a wide network, learning from new conditions in real time and adapting the system to them and executing the complete production process in an autonomous manner. Smart factory and smart farm concepts have many commonalities and include some common solutions, but some specific aspects of smart farms should be studied separately. For example, the design of UGVs for outdoor tasks in agriculture (field robots) presents specific characteristics worthy of explicit efforts.

This chapter focused on reviewing the past and present developments of UGVs for agriculture and anticipated some characteristics that these robots should feature for fulfilling the requirements of smart farms. To this end, this chapter presented and criticized two trends in building UGVs for smart farms based on (i) commercial vehicles and (ii) mobile platforms designed on purpose. The former has been useful for evaluating the advantages of UGV in agriculture, but the latter offers additional benefits such as increased maneuverability, better adaptability to crops, and improved adaptability to the terrain. Clearly, independent-steering

and skid-steering systems provide the best maneuverability, but depending on their complexity, wheel-legged structures can provide similar maneuverability and improved adaptability to crops and terrain as well as increased stability on sloped terrain. For example, the 4-DOF articulated wheeled leg (**Figure 5a**) and the 3-DOF SCARA leg (**Figure 5b** and **6a**) exhibit the best features at the cost of being the most complex. Note that although both structures have the same maneuverability features and adaptability to crops and terrain (ground clearance, body leveling, etc.), the 3-DOF SCARA leg involves one fewer motor per leg, which decreases the price and weight and improves the reliability of the robot. However, the 2-DOF SCARA leg also exhibits useful features regarding maneuverability, adaptability to crops, and adaptability to terrain (ground clearance control and body leveling) while using fewer actuators (**Figure 5c** and **6b**). For agricultural tasks carried out on flat terrain, the 1-DOF leg with a 2-DOF wheeled foot provides sufficient maneuverability and adaptability to crops with very few actuators (leg structure as in **Figure 5d**).

However, these robots also require some additional features to meet the needs of the smart farm concept, such as the following:

i. Flexibility to work on very dissimilar scenarios and tasks.

ii. Maneuverability to perform zero-radius turns, crab motion, etc.

iii. Resilience to recover itself from malfunctions.

iv. Efficiency in the minimization of pesticide and energy usage.

v. Intuitive, reliable, comfortable, and safe HMIs attractive to nonrobotic experts to ease the introduction of robotic systems in agriculture.

vi. Wireless communications to communicate commands and data among the robots, the operator, and external servers for enabling CPSs, IoT, and cloud computing techniques to support services through the Internet.

vii. Safety systems to ensure safe operations to humans, crops, and robots.

viii. Environmental impact by reducing chemicals in the ground and pollutants into the air.

ix. Standards: operational robots have to meet the requirements and specifications of the standards in force for agricultural vehicles.

x. Implement usage: although specific onboard implements for UGV are appearing, the capability of also using conventional implements will help in the acceptation of new technologies by farmers and, hence, the introduction of new-generation robotic systems.

xi. Autonomy: both behavioral autonomy and operation autonomy. Regarding power supplies, automobiles worldwide will likely be electric vehicles powered by batteries within the next few decades; thus, agricultural vehicles should embrace the same solution.

Regardless of these characteristics, UGVs for smart farms have to fulfill the requirements of multi-robot systems, which is a fast-growing trend [22, 40, 46].

Multi-robot systems based on small-/medium-sized robots can accomplish the same work as a large machine, but with better positioning accuracy, greater fault tolerance, and lighter weights, thus reducing soil compaction and improving safety. Moreover, they can support mission coordination and reconfiguration. These capabilities position small/medium multi-robot systems as prime future candidates for outdoor UGVs in agriculture. Additionally, UGVs for smart farms should exhibit some quantitative physical characteristics founded on past developments and current studies that are summarized in **Table 5**.

Finally, autonomous robots of any type, working in fleets or alone, are essential for the precision application of herbicides and fertilizers. These activities reduce the use of chemicals generating important benefits: (i) a decrease in the cost of chemical usage, which impacts in the system productivity; (ii) an improvement in safety for operators, who are moved far from the vehicles; (iii) better health for the people around the fields, who are not exposed to the effects of chemical; and (iii) improved quality of foods that will reduce the content of toxic products.

Acknowledgements

The research leading to these results has received funding from (i) RoboCity2030-DIH-CM Madrid Robotics Digital Innovation Hub ("Robótica aplicada a la mejora de la calidad de vida de los ciudadanos. fase IV"; S2018/NMT-4331), funded by "Programas de Actividades I+D en la Comunidad de Madrid" and cofunded by Structural Funds of the EU; (ii) the Agencia Estatal Consejo Superior de Investigaciones Científicas (CSIC) under the BMCrop project, Ref. 201750E089; and (iii) the Spanish Ministry of Economy, Industry and Competitiveness under Grant DPI2017-84253-C2-1-R.

Author details

Pablo Gonzalez-De-Santos*, Roemi Fernández, Delia Sepúlveda, Eduardo Navas and Manuel Armada
Center for Automation and Robotics (UPM-CSIC), Madrid, Spain

*Address all correspondence to: pablo.gonzalez@car.upm-csic.es

References

[1] CEMA–European Agricultural Machinery. [Accessed: November, 2019]

[2] Burke R, Mussomeli A, Laaper S, Hartigan M, Sniderman B. The Smart Factory: Responsive, adaptive, Connected Manufacturing. Deloitte University Press. Available from: https://dupress.deloitte.com/dup-us-en/focus/industry-4-0/smart-factory-connected-manufacturing.html, 2019 [Accessed: November, 2019]

[3] Corke PI, Roberts JM, Winstanley GJ. Robotics for the mining industry. In: de Almeida A. T., Khatib O. (Eds) Autonomous Robotic Systems. Lecture Notes in Control and Information Sciences, Vol 236. Springer, London, 1998

[4] Bechar A, Vigneault C. Agricultural robots for field operations: Concepts and components. Biosystems Engineering. 2016;**149**:94-111

[5] Bechar A, Vigneault C. Agricultural robots for field operations. Part 2: Operations and systems. Biosystems Engineering. 2017;**153**:110-128

[6] Autopilot. Available from: http://www.trimble.com/Agriculture/autopilot.aspx, 2019 [Accessed: November, 2019]

[7] AutoTrac. Available from: https://www.deere.com/en_INT/products/, 2019 [Accessed: November, 2019]

[8] Lee EA, Seshia SA. Introduction to Embedded Systems - A Cyber-Physical Systems Approach. 2nd ed. Cambridge, Massachusetts: MIT Press; 2017

[9] Ochoa SF, Fortino G, Di Fatta G. Cyber-physical systems, internet of things and big data. Future Generation Computer Systems. 2017;**75**:82-84

[10] TMR, Transparency Market Research, Mobile Robotics Market: Global Industry Analysis, Size, Share, Growth, Trends and Forecast, 2017-2025. Available from: https://www.transparencymarketresearch.com/mobile-robotics-market-2017-2025.html, 2019 [Accessed: November, 2019]

[11] CASE. 2019. Available from: https://www.therobotreport.com/case-ih-displays-new-cab-less-concept-tractor/, 2019 [Accessed: November, 2019]

[12] NEW HOLLAND. Available from: http://agriculture1.newholland.com/nar/en-us/about-us/whats-up/news-events/2016/new-holland-nh-drive-new-concept-autonomous-tractor, 2019 [Accessed: November, 2019]

[13] EU SCAR. Agricultural Knowledge and Innovation Systems Towards the Future – A Foresight Paper, Brussels. Luxembourg: Publications Office of the European Union; 2016

[14] Vetter AA. Quantitative evaluation of DGPS guidance for ground-based agricultural applications. Applied Engineering in Agriculture. 1995;**11**(3):459-464

[15] O'Connor M, Bell T, Elkaim G, Parkinson B. Automatic steering of farm vehicles using GPS. In: Proceedings of the 3rd International Conference on Precision Agriculture, Minneapolis, USA; 1996. pp. 767-777

[16] Noguchi N, Reid JF, Will J, Benson ER, Stombaugh TS. Vehicle Automation System Based on Multi-sensor Integration> ASAE Paper, 983111; 1998

[17] Pilarski T, Happold M, Pangels H, Ollis M, Fitzpatrick K, Stentz A. The Demeter system for automated harvesting. In: Proceedings of the

8th International Topical Meeting on Robotics and Remote Systems; 1999

[18] Stentz A, Dima C, Wellington C, Herman H, stager D. A system for semi-autonomous tractor operations. Autonomous Robots. 2002;**13**:87-104

[19] Subramanian V, Burks TF, Arroyo AA. Development of machine vision and laser radar based autonomous vehicle guidance systems for citrus grove navigation. Computers and Electronics in Agriculture. 2006;**53**(2):130-143

[20] Thuilot B, Cariou C, Martinet P, Berducat M. Automatic guidance of a farm tractor relying on a single CP-DGPS. Autonomous Robots. 2002;**13**(1):53-71. DOI: 10.1023/A:1015678121948

[21] Nørremark M, Griepentrog HW, Nielsen J, Søgaard HT. The development and assessment of the accuracy of an autonomous GPS-based system for intra-row mechanical weed control in row crops. Biosystems Engineering. 2008;**101**:396-410

[22] Gonzalez-de-Santos P, Ribeiro A, Fernandez-Quintanilla C, Lopez-Granados F, Brandstoetter M, Tomic S, et al. Fleets of robots for environmentally-safe Pest control in agriculture. Precision Agriculture. 2017;**18**(4):574-614

[23] Kayacan E, Kayacan E, Ramon H, Saeys W. Towards agrobots: Identification of the yaw dynamics and trajectory tracking of an autonomous tractor. Computers and. Electronics in Agriculture. 2015;**115**:78-87

[24] Bergerman M, Maeta SM, Zhang J, Freitas GM, Hamner M, Singh S, et al. Robot farmers: Autonomous orchard vehicles help tree fruit production. IEEE Robotics and Automation Magazine. 2015;**22**(1):54-63

[25] ISO, Robotic platform: ISO 500 ISO 730 ISO 11001 ISO/TR 12369—Agricultural tractors, 2017

[26] ATC - Autonomous Tractor Corporation – AutoDrive. 2019. Available from: https://www.autonomouStractor.com/ [Accessed: November, 2019]

[27] Precision Makers, X-PERT. Available from: http://www.precisionmakers.com/en/x-pert/, 2019 [Accessed: November, 2019]

[28] Garcia E, Gonzalez-de-Santos P. On the improvement of walking performance in natural environments by a compliant adaptive gait. IEEE Transactions on Robotics. 2006;**22**(6):1240-1253

[29] Lakkad S. Modeling and simulation of steering systems for autonomous vehicles. master thesis. The Florida State University, US; 2004

[30] Bak T, Jakobsen H. Agricultural robotic platform with four wheel steering for weed detection. Biosystems Engineering. 2004;**87**(2):125-136

[31] Bawden O, Ball D, Kulk J, Perez T, Russell R. A lightweight, modular robotic vehicle for the sustainable intensification of agriculture. In: Australian Conference on Robotics and Automation (ACRA 2014), University of Melbourne, December 2014

[32] Bawden O, Kulk J, Russell R, McCool C, English A, Dayoub F, et al. Robot for weed species plant-specific management. Journal of Field Robotics. 2017;**34**:1179-1199

[33] Bogue R. Robots poised to revolutionise agriculture. Industrial Robot International Journal. 2016;**43**(5):450-456

[34] Underwood JP, Calleija M, Taylor Z, Hung C, Nieto J, Fitch R, et al. Real-time

target detection and steerable spray for vegetable crops. In: Proceedings of IEEE ICRA -Workshop on Robotics in Agriculture; 2015

[35] Kongskilde, New Automated Agricultural Platform–Kongskilde Vibro Crop Robotti. Available from: http://conpleks.com/robotech/new-automated [Accessed: November, 2019]

[36] Raussendorf, Raussendorf Maschinen. Available from: http://www.raussendorf.de/en/fruit-robot.html [Accessed: November, 2019]

[37] Precision Makers, Greenbot. Available from: http://www.precisionmakers.com/greenbot/ [Accessed: November, 2019]

[38] Gonzalez-de-Santos P, Garcia E, Estremera J. Quadrupedal Locomotion: An Introduction to the Control of Four-Legged Robots. London: Springer-Verlag; 2006

[39] Ruckelshausen A, Biber P, Dorna M, Gremmes H, Klose R, Linz A, et al. An autonomous field robot platform for individual plant phenotyping. Precision Agriculture. 2009;**9**:841-847

[40] Blackmore BS, Have H, Fountas SA. Specification of behavioural requirements for an autonomous tractor. In: Proceedings of the 6th International Symposium on Fruit, Nut and Vegetable Production Engineering conference, Germany, Institute für Agrartechnik Bornim e.V; 2001. pp. 25-36

[41] Jadeja Y, Modi K. Cloud computing - concepts, architecture and challenges. In: International Conference on Computing, Electronics and Electrical Technologies (ICCEET), Kumaracoil, India; 2012. pp. 877-880

[42] ISO, Robot safety system: ISO 14121—Safety of machinery— Risk assessment (Part 1- Principles and Part 2 - Practical guidance and examples of methods (Technical report)) prepared by the Technical Committee ISO/TC 199; 2017

[43] Wei Z. Real-time optical flow sensor design and its application to obstacle detection. PhD thesis. Brigham Young University. Provo, Utah, US; 2006

[44] Gonzalez-de-Soto M, Emmi L, Benavides C, Garcia I, Gonzalez-de-Santos P. Reducing air pollution with hybrid-powered robotic tractors for precision agriculture. Biosystems Engineering. 2016;**143**:79-994

[45] Perez-Ruiz M, Gonzalez-de-Santos P, Ribeiro A, Fernandez-Quintanilla C, Peruzzi A, Vieri M, et al. Highlights and preliminary results for autonomous crop protection. Computers and Electronics in Agriculture. 2015;**110**:150-161

[46] Emmi L, Gonzalez-de-Soto M, Pajares G, Gonzalez-de-Santos P. New trends in robotics for agriculture: Integration and assessment of a real fleet of robots. The Scientific World Journal. 2014;**2014**:1-21. 404059