View metadata, citation and similar papers at core.ac.uk

brought to you by CORE

provided by IntechOpen

We are IntechOpen, the world's leading publisher of Open Access books Built by scientists, for scientists

4,800
Open access books available

122,000
International authors and editors

135M
Downloads

154
Countries delivered to

Our authors are among the

TOP 1%
most cited scientists

12.2%
Contributors from top 500 universities

WEB OF SCIENCE™

Selection of our books indexed in the Book Citation Index in Web of Science™ Core Collection (BKCI)

Interested in publishing with us? Contact book.department@intechopen.com

Numbers displayed above are based on latest data collected.
For more information visit www.intechopen.com

Chapter

Mitigating Turbulence-Induced Fading in Coherent FSO Links: An Adaptive Space-Time Code Approach

Ojo O. Adedayo, Oluwafemi B. Ilesanmi, Ogunlade M. Adegoke and Ajibade Adedayo

Abstract

Free space optical communication systems have witnessed a significant rise in attention over the last half a decade owing largely to their enormous bandwidth and relative ease of deployment. Generally, free space optical communication systems differ in their detection mechanism as various detection mechanisms are being reported, including intensity modulation/direct detection FSO, differential FSO and coherent FSO. In this chapter, we explore the prospect of obtaining an optimally performing FSO system by harnessing the cutting-edge features of coherent FSO systems and the coding gain and diversity advantage offered by a four-state space-time trellis code (STTC) in order to combat turbulence-induced fading which has thus far beleaguered the performance of FSO systems. The initial outcomes of this technique are promising as a model for various visible light communication applications.

Keywords: free space optical communication, space-time trellis code, turbulence, coherent detection

1. Introduction

Telecommunication is one of the most important innovations in the history of mankind as it affords people the opportunity to communicate rapidly and reliably over long distances, often breaking physical and geographical barriers to make the world a global village as it is known today. One of the key ingredients in the heart of communication technologies over the last century is wireless communication. The advent of RF wireless communication techniques and protocols has been instrumental to the giant strides made in the communication domain as it eliminates the cumbrous requirement of lengthy wired connections, a requirement which has often been a great limitation for wired communication systems.

RF wireless communication systems enjoyed significant attention and penetration but soon became a victim of its success as more and more contents are demanded by users due to the proliferation of data, video, gaming and general broadband multimedia. These demands have prompted communication system engineers to explore

IntechOpen

more efficient, faster and reliable wireless communication techniques. To this end, free space optical (FSO) communication has been a viable solution [1].

Free space optical communication is a communication technology that employs light as carrier by modulating baseband information with optical carriers often from laser beams through free space to the receiver [2]. The path of connection between FSO transmitters and the receivers are known as FSO links. Even though the very first optical system dates back to the eighteenth century, modern FSO communication systems were first widely deployed by the National Aeronautics and Space Administration (NASA) and have since become a promising broadband wireless access technology. FSO communication systems are also being combined with standard RF systems in order to form hybrid communication systems that harness the unique features of RF and FSO communication systems to enhance performance, capacity and reliability.

Characteristically, FSO communication systems are highly secure as they have high immunity to interference with the use of secure point-to-point line-of-sight links, they require no licensing or regulatory permission, and they are fast and can be easily deployed and operated compared to other systems like the fiber optic systems [3]. These features make FSO communication the favored option for the provision of high-speed links for a variety of next generation optical applications including broadcast, security, wireless backhaul at a data rate as high as 40 Gbps [4], fiber backup and last mile communication [5]. Finally, the ease of setup and cost effectiveness of FSO systems have made them the preferred option for restoring connection in case of disaster.

However, the performance of FSO communication systems are greatly affected by turbulence-induced fading [6–12], and different investigations are currently being explored to address this challenge. The inhomogeneity of the temperature and pressure of the atmosphere causes local variations in the refractive index as light propagates from the transmitter to the photoreceptor; these variations degrade the performance of FSO links significantly.

Geared towards the improvement of the performance of coherent FSO communication systems in the presence of atmospheric turbulence, this work examines the error reduction schemes currently being employed for FSO links and presents an adaptive space-time trellis code (STTC) scheme for coherent FSO links.

2. Free space optical communication: types and variants

In terms of reception technique, however, the most commonly reported variants of FSO communication systems are the direct detection/intensity modulated (IM/DD) FSO system and the coherent FSO system. The IM/DD FSO communication systems convey the information to be transmitted only on the intensity of the emitted light, and the receivers simply decode the information as the light changes in intensity. In coherent FSO communication systems, however, other signal properties such as phase and frequency may be employed in conveying the information. At the receiving end, as against simply observing changes in light intensity as in the case of IM/DD FSO systems, coherent FSO communication systems, first, mix the received field optically with a local oscillator before the actual photodetection. So far, more works on the IM/DD FSO communication system are being reported in literature owing to its simplicity of detection as less complex receivers and algorithms are required. Coherent FSO systems, though more complex, however, offer superior performance in terms of improved receiver sensitivity and background noise rejection [13].

Finally, in terms of communication range, FSO communication systems can be characterized into short-range, medium-range, long-range and inter-terrestrial FSO

systems depending on the application for which they are deployed, and these applications include inter-chip communication, inter-vehicular communication, metropolitan area communication as well as satellite and space exploration.

3. FSO system and channel models

Concerted efforts being expended by researchers in the quest of effectively modeling the FSO channel are geared towards understanding the channel and serving as the template upon which FSO modulators, demodulators, receivers and other devices can work. Accurate mathematical models for FSO communication system are the basis upon which the development of high-performing hardware is established, despite huge technical challenge of turbulence-induced fading. This challenge is however being addressed using various techniques as summarized in **Figure** 1.

In the wavelength diversity schemes, the source information is encoded into different wavelengths obtainable from different constituents of the infrared spectrum.

4. Turbulence models

One of the most crucial steps in the attempts to mitigate the degradation in the performance of optical communication systems is accurate modeling of the atmospheric turbulence under different conditions. Below are some of the irradiance functions presented in terms of probability distribution functions.

4.1 Lognormal distribution

The lognormal distribution is one of the most widely employed for weak atmospheric turbulence distribution. Here, the irradiance value received at the receiver follows the distribution [9]

$$f_A(a) = \frac{1}{2a\left(2\pi\sigma_x^2\right)^{\frac{1}{2}}} \exp\left(-\frac{(\ln a + 2\sigma_x)^2}{8\sigma_x^2}\right) \tag{1}$$

where μ_x is the mean value of fading and σ_x^2 is the fading covariance.

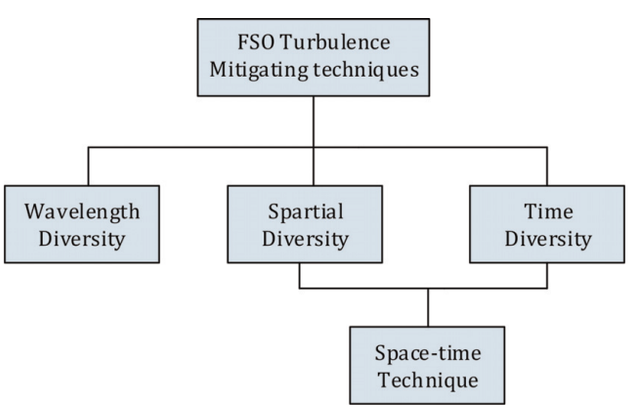

Figure 1.
Some turbulence mitigation techniques in FSO systems.

4.2 *K*-distribution

The K-distribution turbulence model is often used to describe strong atmospheric turbulence conditions (non-Rayleigh sea clutter). For K-distribution atmospheric turbulence model, the probability distribution function $p(I)$ is expressed as [14]

$$p(I) = \frac{2\alpha}{\Gamma(\alpha)}(\alpha I)^{\frac{\alpha-1}{2}} K_{\alpha-1}\left(2\sqrt{\alpha I}\right), I > 0, \alpha > 0 \tag{2}$$

$K_m(\bullet) =$ modified Bessel function of second kind and order m.

4.3 Negative exponential distribution

Negative exponential turbulence model is employed for saturated turbulence cases where the probability distribution function of the received irradiance value is expressed as [15]

$$p(I) = \frac{1}{I_0}\exp\left(\frac{-I}{I_0}\right), I_0 > 0 \tag{3}$$

where I_0 denotes the mean irradiance.

4.4 Gamma-gamma distribution

The gamma-gamma model is very commonly used in FSO communication literatures because it is applicable for a wider range of turbulence conditions. In comparison with measured data, gamma-gamma distribution is effective in describing weak to strong atmospheric turbulence conditions. The PDF is expressed as [16]

$$f\widetilde{H}^{GG}(h) = \frac{2(\alpha\beta)^{\frac{\alpha+\beta}{2}}}{\Gamma(\alpha)\Gamma(\beta)} h^{\frac{\alpha+\beta}{2}-1} K_{\alpha-\beta}\left(2\sqrt{\alpha\beta h}\right) \tag{4}$$

where $K_v(x)$ is the modified Bessel function of the second kind and α and β are the turbulence parameter.

5. Space-time trellis coded coherent FSO

The essence of space-time trellis encoder is to employ mapping functions which are representatives of their trellis diagrams to map binary data to modulation symbols. We design and evaluate the performance of space-time trellis code with two transmit antennas for FSO channel. In order to simplify the design and yet ensuring that there is no jeopardy to the intended MIMO configuration, we represent, for the two transmit antennas, the input bitstream c as [17]

$$c = (c_0, c_1, c_2, \ldots, c_t, \ldots) \tag{5}$$

where c_t, at any instant t denotes a group of two information bits expressed as

$$c_1 = \left(c_t^1, c_t^2\right) \tag{6}$$

As shown in **Figure 2**, the encoder, made up of feedforward shift registers, converts the input bit sequence into a sequence of modulated signals

$x_0, x_1, x_2, \ldots, x_t, \ldots$, where each element x_t of this sequence is the space-time symbol at a given time t.

The output x_t^i of the encoder for the ith transmitter at time t is expressed as [19]

$$x_t^i = \sum_{k=1}^{m} \sum_{j=0}^{v_k} g_{j,i}^k c_{t-j}^k \text{Mod } 2, i = 1, 2 \tag{7}$$

Space-time code (STC) leverages on the features of both time diversity and space diversity to combat turbulence-induced fading in wireless communication systems. RF wireless systems in particular have witness an explosion of interest in the use of space-time coding to improve communication system performance in terms of error control and turbulence mitigation, and FSO communication systems are also witnessing a lot of interest in using this same tool for similar purpose.

In this chapter, we present an adaptive four-state space-time trellis coded coherent FSO system with two transmit lasers, as illustrated in **Figure 3**. Firstly, the error correction performance of the system is complemented by the interleaver, a mechanism put in place to distribute the burst errors—an effect of deep fade, onto different codeword lengths.

Denoting the average SNR as γ, we take the received signal matrix for each codeword C as [20]

$$R = \sqrt{\gamma}\text{CH} + Z \tag{8}$$

where H and Z are the channels and noise matrices, respectively, and H is modeled in terms of the uniformly distributed channel gain phase $\phi_{\mu v}$ and the channel gain amplitude $a_{\mu v}$ as [20]

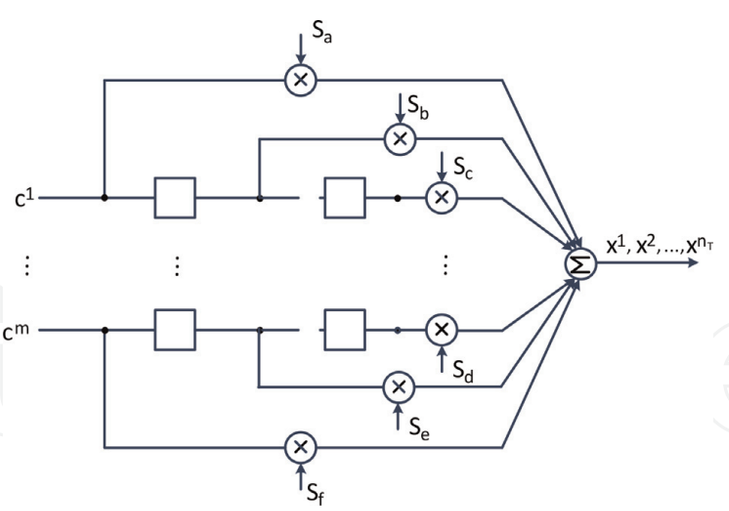

Figure 2.
STTC encoder [18].

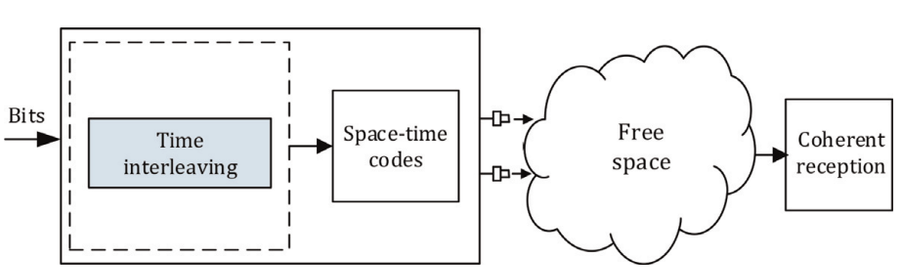

Figure 3.
Space-time trellis coded FSO communication system.

$$[H]_{\mu v} = a_{\mu v} e^{j\phi_{\mu v}} \; 1 \le \mu \le 2, 1 \le v \le N \tag{9}$$

We begin our analysis using the pairwise error probability (PEP), which is the probability that the decoder erroneously decodes a transmitted STTC codeword **C** as $C' = \left[c'_0 ... c'_{T-1}\right]$. Then, assuming a gamma-gamma fading distribution as portrayed in Eq. (4), we represent the conditional PEP as [5]

$$P_e(E|H) = Q\left(\sqrt{\frac{\gamma d^2(E)}{2}}\right) \tag{10}$$

where

$$d^2(E) = tr\left\{H^H E^H E H\right\} \tag{11}$$

Now, writing a matrix B and its constituent elements as

$$B = \begin{bmatrix} b_{11} & b_{12} \\ b_{12}^* & b_{22} \end{bmatrix} \tag{12}$$

and by equating B with the positive semi-definite matrix $E^H E$ and comparing the elements thereof, where E represents the error matric in the decoding of the codewords and $(\bullet)^H$ denotes the Hermitian transpose function, we write the asymptotic pairwise error probability of the systems as [21]

$$PEP = \frac{\left(\pi a_h^2 \Gamma^2(2\mu) F\left(\mu, \mu; 1; \xi^2\right)\right)^N \Gamma\left(2\mu N + \frac{1}{2}\right) \gamma^{-2\mu N}}{2\sqrt{\pi}(b_{11} b_{22}) \mu^N \Gamma(2\mu N + 1) \Gamma^{2N}\left(\mu + \frac{1}{2}\right)} \tag{13}$$

where the Gaussian hypergeometric function $F(\bullet)$ is readily computed by using specialized computing functions from libraries of most engineering computing applications or by using fast-converging series [20] as

$$F\left(\frac{t}{2}, \frac{t}{2}; 1; \xi^2\right) = \sum_{n=0}^{\infty} \left[\binom{\frac{t}{2} + n - 1}{n} \xi^n\right]^2 \tag{14}$$

The function Γ in Eq. (13) is a function of the channel parameters α and β; these parameters may be obtained through the Rytov variance, which in turn is a function of the refractive index, the transmission path length between the transmitter and the receiver and the optical wave number [22].

With proper modifications of the values of ξ, Eq. (13) and by extension, Eq. (14), could be modified for general case as well as specific non-orthogonal space-time codes for coherent free space optical communication system. We leverage onto this feature to introduce an adaptive orthogonality controller which adjusts its parameters to any STC supplied thereby not merely eliminating the orthogonality condition as presented in [21] but effectively introduces additional flexibility to the coding scheme.

Readers are to note, however, that several space-time code designs reported for IM/DD FSO communication systems cannot be simply employed for coherent FSO communication systems. This caveat is due to the peculiarities inherent in coherent FSO systems. In addition to this, it should also be noted that in this work, it is assumed that the transmit lasers simultaneously illuminate the receivers with the receivers far away enough from the transmit lasers to assume independent and identically distributed (iid) fading gain.

6. Results and discussion

In this section, the results of the space-time code technique for mitigating turbulence-induced fading in coherent FSO communication systems are presented. Free space optical systems often face the challenge of fading as well as pointing error, and the effect of the latter has been well addressed [23]. The performance of the link under gamma-gamma turbulence is investigated for two transmit lasers, first, with two receivers and then four and six receivers, respectively, as shown in **Figure 4**. Apart from the reduction of the average bit error rate with increase in SNR values, the result shows that at low average SNR, the average performance of the link under the turbulence condition for the different number of receivers are relatively close. However, the difference in performance becomes apparent at higher SNRs as evidenced from SNR 20 to SNR 38.

Although gamma-gamma distribution have been well reported as suitable for modeling weak turbulence as well as strong turbulence scenarios, for the sake of analysis, we employ the values $\alpha = 3.0$ and $\beta = 2.7$. The choice of these values is

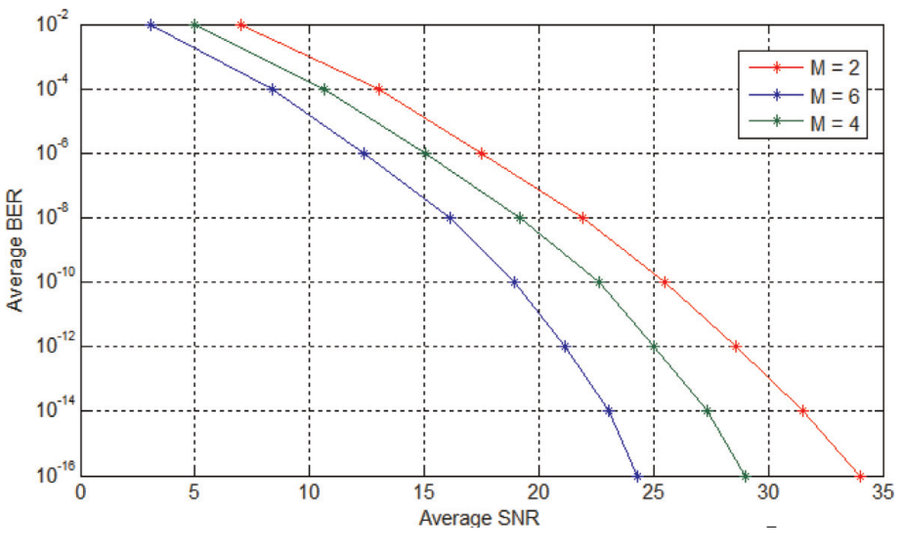

Figure 4.
Performance of coherent FSO link with different receivers.

Coding scheme	Modulation scheme	Detection type	SNR (dB)	References
STBC	OOK	IM/DD	—	[24]
STC variant—no additional constellation extension	PPM	IM/DD	$0 \leq \text{SNR} \leq 30$	[25]
STBC	OOK	IM/DD with maximum likelihood (ML)	—	[26]
Alamouti-type STC	OOK and PPM	Coherent detection and IM/DD	Additional 3 dB loss relative to BPSK	[27]
STTC	—	IM/DD	$0 \leq SNR \leq 90$	[28]
Extended Alamouti STC with turbo coding	PPM	IM/DD	$0 \leq \text{SNR per bit} \leq 30$	[29]
STTC	QPSK	Coherent detection	$0 \leq SNR \leq 35$	This work

Table 1.
Some coding schemes employed for FSO links.

informed by their popularity in literature as the performance of this work is compared with earlier works in this domain, many of which employed the gamma-gamma distribution parameter above.

FSO communication systems vary in their reception mechanisms as well as modulation techniques. Many works have employed OOK, PPM and QPSK or a combination of these modulation schemes all in a bid to mitigate turbulence-induced fading in FSO links. A few of these works and their corresponding features in comparison to this work are presented in **Table 1**.

Even though the efficiency of space-time codes for turbulence mitigation or error correction in intensity modulated/direct detection FSO systems remains inconclusive in literature, we establish that space-time coding—adaptive space-time trellis codes as in the case of this work, together with inherent potentials of coherent reception for FSO systems—remains a promising solution for free space optical communication systems.

7. Conclusion

For coherent free space optical communication links, we explore the space-time approach to mitigating turbulence-induced fading which thus far remains a serious performance degrading factor for FSO systems. Additionally, as an effort geared towards realizing the promising potentials of coherent free space optical communication systems, we propose an adaptive orthogonality controller for seamless deployment of space-time codes for coherent free space optical communication systems.

Author details

Ojo O. Adedayo[1*], Oluwafemi B. Ilesanmi[2], Ogunlade M. Adegoke[1] and Ajibade Adedayo[1]

1 Department of Electrical Electronic and Computer Engineering, College of Engineering, Afe Babalola University Ado-Ekiti (ABUAD), Ado-Ekiti, Ekiti State, Nigeria

2 Department of Electrical Electronic Engineering, Faculty of Engineering, Centre for Research in Electrical Communication (CRECO), Ekiti State University, Ado-Ekiti, Ekiti State, Nigeria

*Address all correspondence to: ojoao@abuad.edu.ng

IntechOpen

© 2019 The Author(s). Licensee IntechOpen. This chapter is distributed under the terms of the Creative Commons Attribution License (http://creativecommons.org/licenses/by/3.0), which permits unrestricted use, distribution, and reproduction in any medium, provided the original work is properly cited.

References

[1] Adedayo O, Oluwafemi I, Esan O. Space-time codes in free space optical communications: A case for improved spectral efficiency. The International Journal of Microwave and Optical Technology. 2018;**13**(4):359-368

[2] Kaur G, Singh H, Sappal AS. Free space optical using different modulation techniques—A review. International Journal of Engineering Trends and Technology (IJETT). 2017;**43**(2): 109-115

[3] Mahdieh MHÃ, Pournoury M. Optics & laser technology atmospheric turbulence and numerical evaluation of bit error rate (BER) in free-space communication. Optics and Laser Technology. 2010;**42**(1):55-60

[4] Leitgeb E, Sheikh S, Chlestil C, Gebhart M, Birnbacher U. Reliability of FSO links in next generation optical networks. IEEE ICTCON. 2005:394-401

[5] Garcia-Zambrana A, Castillo-vazquez C, Castillo-vazquez B. Space-time trellis coding with transmit laser selection for FSO links over strong atmospheric turbulence channels. Optics Express. 2010;**18**(6):1293-1300

[6] Tang X, Xu Z. Outage probability of multihop free space optical communications over Nakagami fading channels. 2013. pp. 199–202

[7] Bayaki E, Schober R, Mallik RK. Performance analysis of MIMO free-space optical systems in gamma-gamma fading. IEEE Transactions on Communications. 2009;**57**(11)

[8] Ninos MP, Nistazakis HE, Tombras GS. On the BER performance of FSO links with multiple receivers and spatial jitter over gamm-gamma or exponential turbulence channels. Optik—International Journal for Light and Electron Optics. 2017:1-28

[9] Alimi I, Shahpari A, Sousa A, Ferreira R, Monteiro P, Teixeira A. Challenges and opportunities of optical wireless communication technologies. In: Optical Communication Technology, Pedro Pinho, IntechOpen; 2017

[10] Abou-rjeily C, Member S. Performance analysis of FSO communications with diversity methods: Add more relays or more apertures? IEEE Journal on Selected Areas in Communications. 2015;**33**(9): 1890-1902

[11] Ogunmodede HA, Afullo TJ, Owolawi PA. Performance evaluation of OFDM-FSO communication systems using-QAM and BPSK modulation under log-normal channel. In: The Southern Africa Telecommunication Network and Application Conference; 2016. pp. 98-103

[12] Niu M, Cheng J, Holzman JF. Space-time coded MPSK coherent MIMO FSO systems in gamma-gamma turbulence. In: IEEE Wireless Communications and Networking Conference (WCNC)); 2013. pp. 4266-4271

[13] Kumar P. Comparative analysis of BER performance for direct detection and coherent detection FSO communication systems. In: Fifth Interantional on Communication Systems and Network Technologies; 2015. pp. 369-374

[14] Khalighi MA, Uysal M. Survey on free space optical communication: A communication theory perspective. IEEE Communication Surveys and Tutorials. 2014;**16**(4):2231-2258

[15] Anbarasi K, Hemanth C, Sangeetha RG. A review on channel models in free space optical communication systems. Optics and Laser Technology. 2017;**97**: 161-171

[16] Letzepis N, Guillén A. Outage probability of the Gaussian MIMO free-space optical channel with PPM. IEEE Transactions on Communications. 2009; **57**(12):3682-3690

[17] Rana SM, Alam SMS, Fatema KJ. Code construction and performance evaluation of space time trellis code (STTC) over Rayleigh fading channel. In: Proceedings of the 14th International Conference on Computer and Information Science and Technology; 2011. pp. 22-24

[18] Li Y, Ge Y, Yu J, Dai J, Fu X, Yang E. Improved space-time trellis coded OFDM scheme for frequency selective fading channels. IEEE Canadian Conference on Electrical and Computer Engineering. 2004:1967-1970

[19] Vucetic B, Yuan J. Space-Time Coding. West Sussex, England: John Wiley & Sons Ltd; 2003

[20] Nezampour A, Schober R. Asymptotic analysis of space-time codes in generalized fading channels. IEEE Communications Letters. 2009;**13**(8): 561-563

[21] Bayaki E, Schober R. Performance and design of coherent and differential space-time coded FSO systems. Journal of Lightwave Technology. 2012;**30**(11): 1569-1577

[22] Niu M, Cheng J, Holzman JF. Terrestrial coherent free-space optical communication systems. In: Optical Communication. British Columbia, Canada: The University of British Columbia (UBC); 2012. pp. 169-176

[23] Dubey V, Chandra V. Effect of pointing error on cooperative free space optical communication systems under different channel conditions. In: International Conference on Advanced Networks and Telecommunications System (ANTS); 2015. pp. 2-5

[24] Garcia-Zambrana A. Error rate performance for STBC in free-space optical communications through strong atmospheric turbulence. IEEE Communications Letters. 2007;**11**(5): 390-392

[25] Abou-Rjeily C, Fawaz W. Space-time codes for MIMO ultra-wideband communications and MIMO free-space optical communications with PPM. IEEE Journal on Selected Areas in Communications. 2008;**26**(6):938-947

[26] Wang K, Nirmalathas A, Lim C, Alameh K, Skafidas E. Space-time coded high-speed reconfigurable free-space card-to-card optical interconnects with extended range. The Journal of the Optical Society of America. 2016;**1**(16): 6-8

[27] Abaza M, Mesleh R, Mansour A, Aggoune EM. Spatial diversity for FSO communication systems over atmospheric turbulence channels. In: IEEE WCNC '14 Track 1: PHY and Fundamentals. vol. 1. 2014. pp. 382-387

[28] Mesleh R, Elgala H, Haas H. Optical spatial modulation. Journal of Optical Communications and Networking. 2011; **3**(3):234-244

[29] Khare V, Chadha D. Extended alamouti space time coding scheme with turbo coding for free space optical communication. In: International Conference on Computational Intelligence and Communication Networks; 2011. pp. 366-369