4

Reduction of Nonlinear Distortion in Multi-Antenna WiMAX Systems

Peter Drotár, Juraj Gazda, Dušan Kocur
and Pavol Galajda
Technical University of Kosice
Slovakia

1. Introduction

Multiple-input multiple-output (MIMO) techniques in combination with orthogonal frequency-division multiplexing (OFDM) have already found its deployment in several standards for the broadband communications including WiMAX or 3GPP proposal termed as Long Term Evolution (LTE). The MIMO-OFDM allows to substantially increase the spectral efficiency, link reliability and coverage of the signal transmission. With recent advent of the hardware processing enhacements, the processing requirements of MIMO-OFDM might be accomodated in the portable units and thus, it is widely expected that this technology will dominate over the next years in the wireless communications.

Despite of its undoubted benefits, MIMO-OFDM transmission systems are also characterized by the large envelope fluctuation of the transmitted signal Drotar et al. (2010a). This requires the application of the high Input Back-off (IBO) at the nonlinear High Power Amplifier (HPA) stage that subsequently results in an inefficient use of HPA and limitation of the battery life in the user mobile stations.

In is important to note that nonlinear amplification manifests itself in the form of Bit-Error-Rate (BER) degradation at the receiver side and simultaneously, in the form of the out-of-band radiation Deumal et al. (2008). An intuitive solution to supress the out-of-band radiation and thus, occupy the area within the spectral mask of the transmission is is to deactivate subcarriers at the borders of the used MIMO-OFDM spectrum. However, this approach impairs the spectral efficiency of the transmission and may not be convenient for the high data rate applications. Therefore it is feasible to look for the additional technique that aim to reduce the out-of-band emissions and to maintain the specific spectral mask of the transmission Khan (2009).

The possible solution is to design MIMO-OFDM systems such that the signal is less sensitive to the nonlinearity impairments. Lower fluctuation of the signal envelope can be achieved by modifying the transmitted signal prior to the transmission. However, this approach requires additional hardware and signal processing at the transmitter, which is not feasible in some applications. For these applications, the receiver based compensation is of more interest.

In the following sections, we will review the details of the most favourite methods reducing envelope fluctuation, which are intended to be used in Single-Input Single-Output (SISO) OFDM and MIMO-OFDM systems. Moreover, we will introduce two novel techniques that

aim to supress the effects of the nonlinearities in MIMO-OFDM. The former will significantly reduce the envelope fluctuation by using the null subcarriers occuring in the transmission and the latter will improve the BER performance of MIMO-OFDM by means of the iterative detection.
Specially, the salient advantage of employing the nonlinear detector scheme in WiMAX is that, since it is implemented at the base station, it does not increase the computational complexity of the mobile terminal, thus neither increasing the cost nor reducing the battery life. On the other hand, using the null subcarriers for the envelope fluctuation reduction does not reduce the data rate, nor the spectral efficiency of the transmission and therefore its application is also vital in WiMAX.

2. MIMO-OFDM system model

Given we have N_t transmit antennas and N_c OFDM subcarriers, at each time instant t a block of symbols is encoded to generate space-frequency codeword. The space-frequency block-code (SFBC) codeword is then given by

$$\mathbf{X} = \begin{pmatrix} x_1^1 & x_2^1 & \cdots & x_{N_t}^1 \\ x_1^2 & x_2^2 & \cdots & x_{N_t}^2 \\ \vdots & \vdots & \ddots & \vdots \\ x_1^{N_c} & x_2^{N_c} & \cdots & x_{N_t}^{N_c} \end{pmatrix}, \tag{1}$$

where n-th column is the data sequence for n-th transmit antenna.
Space-frequency codeword is generated by grouping subcarriers and applying space time block code only across the sub-carriers in the same group Giannakis et al. (2007); Jafarkhani (2005); Liu et al. (2002). If SFBC is designed carefully, such a grouping will not degrade the diversity gain of the proposed coding scheme. Moreover, the subcarrier grouping reduces the complexity and allows the design of code matrices per subsystem since space-frequency coding constructs $\mathbf{X}_g$ separately as in (2) instead of constructing the entire $\mathbf{X}$ as in (1).

$$\mathbf{X} = \begin{pmatrix} \mathbf{X}_0 \\ \mathbf{X}_1 \\ \vdots \\ \mathbf{X}_{N_g-1} \end{pmatrix}, \tag{2}$$

where N_g is number of sub-blocks equal to $N_g = N_c/N_s$ and N_s is number of the time slots required to transmit one codeword.

3. Problem formulation

The discussion in this chapter assumes the single antenna system. However, the extension to MIMO-OFDM is straightforward and will be used with advantage later in the sections.

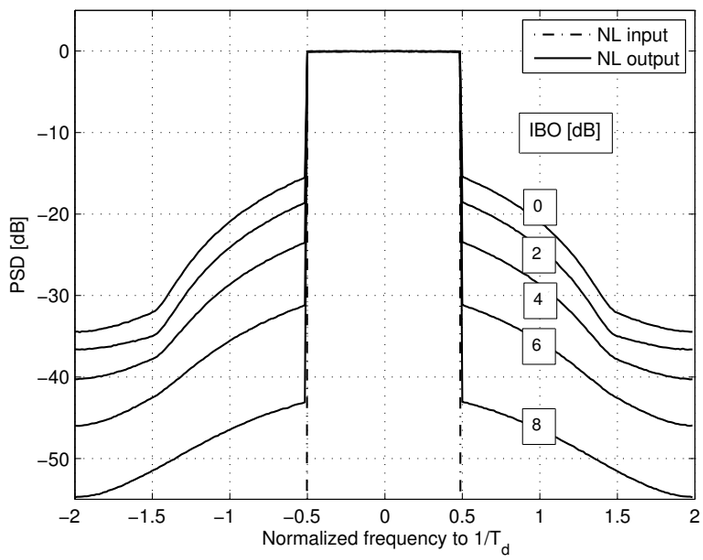

Fig. 1. Power spectral density at the output of the transmitter at various IBO.

If there is a non-constant envelope signal (e.g OFDM signal) at the input of HPA, the nonlinear amplification might result in the significant nonlinear distortion that consequently affects the system performance. The resulting effect of the nonlinear distortion can be divided into the two types: the out-of-band distortion and the in-band distortion. The in-band distortion produces inter-carrier interference increasing BER, or equivalently reducing the system capacity or operational range. The out-of-band distortion appears as the spectral regrowth, hence causing the interference in the adjacent channels.

The spectral regrowth can be easily explained by the intermodulation product introduced by the nonlinearity. Intermodulation products may potentially lay outside the transmission bandwidth, what means that some portion of energy is generated into the neighbouring channel. However, these channels are usually occupied by the adjacent user and so the operation point of HPA has to be chosen very carefully to meet the spectral mask constrains. Employing higher IBO values leads to the suppression of the out-of-band radiation, but at the cost of reduced HPA efficiency. Figure 1 shows the PSD curves for the OFDM signal employing $N_c = 256$ subcarriers and soft limiter model of HPA at various IBO levels. As can be seen from the figure, there is a significant out of band radiation at low IBO levels, but it decreases towards larger IBO. As the result, by applying larger IBO, HPA operates in the linear region of its characteristic. The spectral regrowth and out-of-band distortion is treated in more detail in e.g. Baytekin & Meyer (2005); Zhou & Raich (2004).

Next, the BER performance degradation caused by the nonlinear amplification is considered. In the following we assume that the distortion caused by the HPA can be modelled as an additive Gaussian noise (AWGN) whose variance depends on the input signal and the nonlinear HPA characteristics. Note that, even though this is the most common assumption in the literature Dardari et al. (2000); Ochiai & Imai (2001); Tellado (2000), there are some cases, e.g low number of subcarriers or low clipping levels, when this assumption is inaccurate and does not hold.

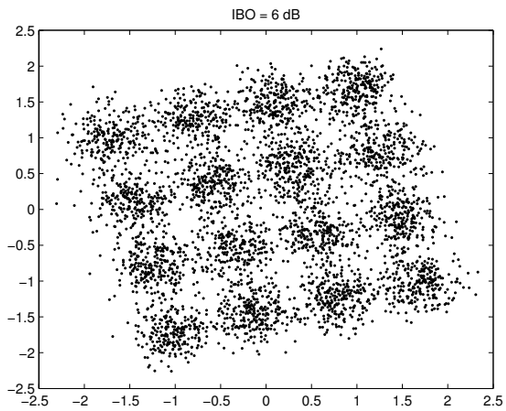

Fig. 2. The effects of nonlinear distortion on 16-QAM OFDM constellation for different IBO values

Assuming that the nonlinear distortion is additive and Gaussian, the OFDM signal at the output of the nonlinearity can be written as

$$\overline{x} = G_{HPA}x + d, \tag{3}$$

where the term $\overline{x}$ is the distortion free input signal vector. G_{HPA} is the complex scaling term that is responsible for the attenuation and rotation of the constellation. The term d is responsible for clouding of the constellation is the function of the modulated symbol vector x and the nonlinear transfer function $g(\cdot)$. Moreover, if the symbol size is large and so the number of nonzero distortion terms, the distortion term will be approximately Gaussian random variable, as was already pointed out in Tellado (2000).
The constellation of an exemplary distorted 16-QAM symbol alphabet for selected IBO values is shown in Figure 2. Figure 2 also confirms that in-band nonlinear distortion behaves as an additive Gaussian noise.

4. Review of selected PAPR reduction methods

In this section, we provide the brief overview of the most well-known PAPR reduction methods. Formerly, they were designed for conventional SISO systems, but the extension to MIMO systems is in the most cases straightforward.

4.1 Clipping of the transmitted signal

The simplest technique for reduction of the envelope fluctuation is clipping. In clipping all the samples exceeding a given threshold are forced to this maximum value. This is similar to the passing signal through soft limiter nonlinearity. The major disadvantage of clipping technique is that it introduces distortion and increase both BER and out-of-band radiation. In order to improve BER performance, the receiver needs to estimate clipping that has occurred and conversely, compensate received OFDM signal accordingly.
Authors in Kwon et al. (2009) propose the new low complexity SFBC transmitter for clipped OFDM signals, which preserves orthogonality of transmitted signals. Furthermore, clipping reconstruction method for SFBC/STBC-OFDM system based on iterative amplitude

reconstruction (IAR) in Kwon & Im (2006) is presented. Another approach for improving the performance of clipped MIMO-OFDM systems with (quasy)-OSTBC is to use the statistics of the clipping distortions to develop maximum likelihood (ML) decoding Li & Xia (2008). For the case of spatially multiplexed systems, the soft correction method of Bittner et al. (2008) is applicable.

4.2 The selected mapping scheme

In the selected mapping technique, the transmitter generates several candidate data blocks from the original data block. Subsequently, the one with the lowest envelope fluctuation is transmitted. The candidate data blocks are generated as follows. First, U different phase sequences of length N are generated, $\mathbf{b}^{(u)} = (b_0^{(u)}, b_1^{(u)}, \ldots, b_{N-1}^{(u)})$, $u = 1, \ldots, U$, where normally $\mathbf{b}^1$ is set to be all-one vector of the length N in order to include also unmodified block into the set of candidate data blocks. Then candidate data blocks are generated by element-wise multiplication of the frequency-domain OFDM symbol by each $\mathbf{b}^{(u)}$, IFFT is applied and the resulting block with the lowest envelope fluctuations is selected for the transmission. The information about the selected phase sequence has to be transmitted to the receiver in the form of the side information. At the receiver, the reverse operation is performed to recover the original data block.

The straight-forward implementation of conventional SISO SLM is similar to PTS. In this scheme the SISO SLM technique is applied separatelly to each of the N_t transmitting antennas in the MIMO-OFDM system. For each of the parallel OFDM frames, the best phase modification out of the U possible ones is individually selected.

Concurrent SLM approach ensures higher reliability of side information. This is achieved through the spatial diversity by transmitting the same side information on different antennas Lee et al. (2003).

In Fischer & Hoch (2006), authors introduce *directed* SLM (*d*SLM) scheme that uses advantage of multiple antennas. The PAPR decreasing abilities of this method improve with increasing number of antennas, however this comes at the expense of higher number of side information (SI) bits.

In order to improve bandwidth efficiency number of transmitted SI bits has to be decreased. Therefore *small-overhead* SLM was proposed in Hassan et al. (2009). This scheme not only improve bandwidth efficiency but achieves also substantially better BER performance compared to *d*SLM or SISO SLM applied on multiple antennas.

The computational complexity of SLM method is relatively high therefore there is strong need for low-complexity solutions. The promising approach that require only one FFT operation was introduced in Wang & Li (2009). It exploits the time-domain signal properties of MIMO-OFDM systems to achieve a low-complexity architecture for candidate signal generation.

4.3 The partial transmit sequence technique

In the partial transmit sequence technique Han & Lee (2006); Muller & Huber (1997), the original data block of length N is partitioned into V disjoint subblocks, $\mathbf{s}_v = (s_{v,0}, s_{v,1}, \ldots, s_{v,N-1})$, $v = 1, \ldots, V$ such that $\sum_{v=1}^{V} \mathbf{s}_v = \mathbf{s}$. The subcarriers in each subblock are weighted by a phase factor, $b_v = e^{j\Phi_v}$, $v = 1, 2, \ldots, V$, for vth subblock. Such phase factors are

selected in the way that the envelope fluctuation of the combined signal is minimized. The time domain signal after applying PTS can be expressed as

$$s = \sum_{v=1}^{V} b_v \cdot s_v, \tag{4}$$

where $\{b_1, b_2, ..., b_V\}$ is the selected set of phase factors.
The *straight-forward* implementation of the PTS technique for MIMO-OFDM is the independent application of PTS to each transmit antenna. It is just simple application of single antenna PTS. *Simplified approach* provides advantage over straight-forward implementation by decreasing required side information. The input data symbols are converted into the several parallel streams and the conventional PTS technique for single antenna OFDM is applied for each antenna with the sets of the phase factors being equal for all transmit antennas. Since the side information is the same for all transmit antennas, the amount of the side information per transmit antenna is reduced.
Another, *directed PTS*, approach is based on directed Selected Mapping technique Fischer & Hoch (2006). The idea of this technique is to increase number of possible alternative signal representations. In order to keep the complexity similar to the straight-forward or the simplified approach, not all possible candidates are evaluated for each transmitt antenna. The algorithm concentrates on the antenna exhibiting the highest PAPR and aims to reduce it Siegel & Fischer (2008).
In contrast to afore mentioned approaches, *Spatial shifting* provides additional way to exploit presence of multiple antenna by cyclically shifting the partial sequences between antennas Schenk et al. (2005). In other words, instead of using weighting factors for generating the different signal representations cyclic shifting of the partial sequences between the antennas is used. The advantage of this technique is its possible implementation as transparent version, where no side information needs to be transmitted.
Recently, *Siegel* and *Fischer* proposed *Spatially permuted PTS* that is more general permutation compared to cyclic shifting, described above Siegel & Fischer (2008).
Similarly as for SLM method, complexity remains significant issue also for PTS methods. The approach with reduced complexity, named *Polyphase interleaving and inversion*, for SFBC MIMO-OFDM can be find in Latinović & Bar-Ness (2006).
Finally, interesting comparison of PTS and SLM can be found in Siegel & Fischer (2008).The comparison is based on equal computational complexity of both schemes and presented analysis indicate better performance (in terms of PAPR reduction) of PTS method.

4.4 Active constellation extension

In the active constellation extension strategy, some of the outer constellation points of each OFDM block are extended toward the outside of the original constellation such that the envelope variations of OFDM signal are reduced. By doing this, some constellation points are set to be further from the decision boundaries than the nominal constellation points that slightly reduce BER.
The advantages of ACE are that it is transparent to the receiver, there is no loss of the data rate and no need for the side information. On the other hand, it increases the total transmitted power, that has to be considered in system design.

Recent work in this area includes extensions of the concept of ACE using a modified smart gradient-project (SGP) algorithm for MIMO-OFDM systems Krongold et al. (2005) and extension of the efficient ACE-SGP method to STBC, SFBC and V-BLAST OFDM systems Tsiligkaridis & Jones (2010).

4.5 Tone reservation

The basic idea of the tone reservation is to add data-block dependent time domain signal u_n to the original OFDM signal s_n with aim to reduce its peaks. In case of Tone Reservation (TR), the transmitter does not use the small subset of subcarriers that are reserved for the correcting tones. These reserved subcarriers are then stripped off at the receiver. TR similarly to the ACE technique has the slight drawback of the increase in the power of the transmission.
The extension of TR for MIMO-OFDM is straightforward, but it does not take advantage of MIMO potential. TR technique tailored for eigenbeamformed multiple antenna systems has been proposed in Zhang & Goeckel (2007), where authors introduced so-called mode reservation as analogy for TR of SISO-OFDM. Nevertheless this technique requires a perfect CSI at the transmitter.

5. Tone reservation for OFDM SFBC using null subcarriers

Now, let us assume SFBC-OFDM system with the code rate $r = 3/4$ corresponding to the selected code $\mathbf{C}_{334}$ Jafarkhani (2005) , equipped with $N_t = 3$ transmitting and N_r receiving antennas. Furthermore we assume that system employs N_c sub-carriers and M-QAM based-band modulation. The data symbol vector $\mathbf{s} = [s_0, s_1, \ldots, s_{r \cdot N_c - 1}]$ is encoded with the space-frequency encoder producing three vectors $\mathbf{x}_1$, $\mathbf{x}_2$, $\mathbf{x}_3$ as

$$\mathbf{x}_1 = [s_0, -s_1^*, s_2^*, 0, \ldots, s_{rN_c-3}, -s_{rN_c-2}^*, s_{rN_c-1}^*, 0] \tag{5}$$

$$\mathbf{x}_2 = [s_1, s_0^*, 0, s_2, \ldots, s_{rN_c-2}, s_{rN_c-3}^*, 0, s_{rN_c-1}] \tag{6}$$

$$\mathbf{x}_3 = [s_2, 0, -s_0^*, -s_1^*, \ldots, s_{rN_c-1}, 0, -s_{rN_c-3}^*, s_{rN_c-2}^*] \tag{7}$$

The vectors $\mathbf{x}_1$, $\mathbf{x}_2$, $\mathbf{x}_3$ corresponds to the columns of (1). After the mapping according to the orthogonal design on several streams associated with the transmit antennas, a simple serial to parallel converter is used for each transmit antenna, followed by IFFT processing, cyclic prefix insertion and amplification. A simplified block diagram is shown in Figure 3.
From the above discussion it is clear that due to the SFBC coding scheme, there will be uniformly distributed zero tones at the input of IFFTs. Let us define the positions of the correcting signals $\mathcal{Q}_{R,n}$ for $n = 1, \ldots, N_t$ by these zero subcarriers. The proposed method consists of adding the correcting tones at the subcarrier indices occupied by the zero symbols according to $\mathcal{Q}_{R,n}$, instead of reserving the set of the subcarriers from the data bearing tones. By doing so, we can avoid an important drawback of the tone reservation technique-bandwidth expansion.
It is clear that adding correcting signal to the SFBC encoded signals $\mathbf{x}_1, \mathbf{x}_2, \mathbf{x}_3$ may result in loss of the orthogonality, thereby eventually increasing the probability of erroneous detection. The correcting signal represents additive distortion for the decision variables in the receiver. Conversely, in order not to increase BER, the amplitude of the correcting tones must be

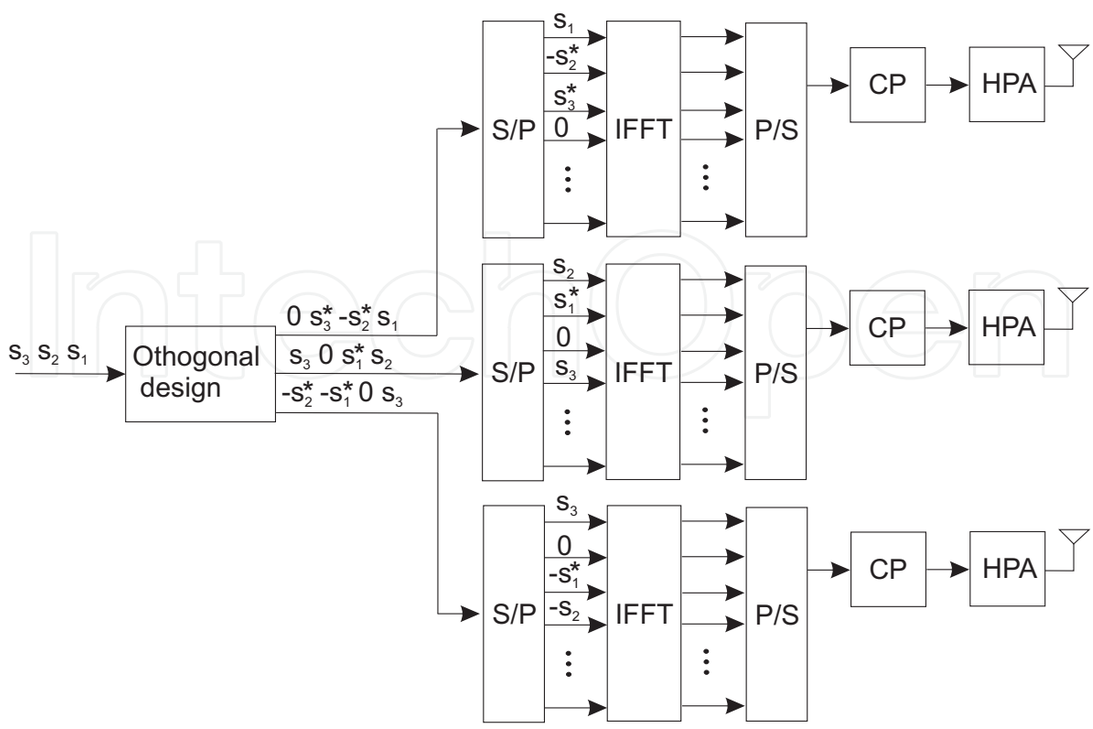

Fig. 3. Transmitter of MIMO SFBC-OFDM employing C_{334} code

controlled. Maximal amplitude that does not result in increase in BER depends on both, the baseband modulation scheme and the in-band nonlinear distortion introduced by HPA.

Figure 4 shows maximum allowed amplitude vs. IBO for various modulations. All curves fulfill the following condition:$BER_{TR} \leq BER_{conv}$ i.e. BER of TR based SFBC-OFDM system is lower or equal to that of the conventional system. This figure can be used by system designer as upper bound for the amplitude of the reserved tones in the different system setups. As it can be appreciated, these results are in compliance with our previous assumptions. We can go for higher amplitudes of peak-reduction tones and achieve large out-of-band radiation reduction without BER penalty when QPSK and 16 QAM or coded 64 QAM are adopted for the transmission. The presumptions of the amplitude constraints when uncoded 64 QAM is used are of more relevance, especially for lower IBO. In other words, when applying the uncoded higher modulation schemes (e.g. 64 QAM), the amplitude of the correcting tones is constrained to the very low power, leading to poorer performance of the proposed method performing at the low IBO. However, it should be noted that for low IBO achieved BER of the original system is very poor, characterized by the occurrence of the error floor, thus this performance is not of our interest. Because of this, designer must go for the higher IBO.

Figure 5 shows the PSD of original and TR-reduced OFDM signals when a soft limiter operating at IBOs of 4dB or 5dB is present at the output of the transmitter. In order to prevent the BER performance degradation resulting from the broken space orthogonality among transmitted signals, the maximum amplitude γ is constrained to be $\gamma = 0.2$. That corresponds to the power of reserved tones being more than 14 dB lower than the average signal power. It allows for obtaining the reduction in terms of the out-band-radiation while keeping the BER performance of the system at the same or even better level than BER of the

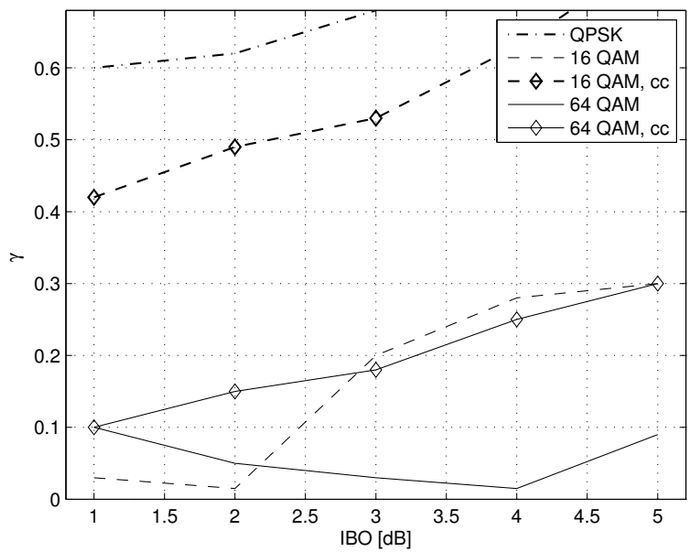

Fig. 4. Maximal normalized amplitude of reserved tones for various IBO satisfying $BER_{TR} \leq BER_{conv}$

conventional system without the application of TR. Moreover, such a value is suitable for most of the system setup implementations. It can be seen in Figure 5 that the spectrum at the center of the adjacent channel is reduced by 2.7 dB and 4.3 dB when the nonlinearity is operating at IBO = 4dB and 5dB respectively. Based on the analytical results introduced in Deumal et al. (2008) it can be stated that the amount of the out-of-band radiation is independent on the mapping scheme. Therefore by applying the proposed technique here, the same out-of-band radiation suppression can be observed for all modulation formats which make the application of the proposed technique robust in general.

6. Iterative nonlinear detection

This novel method aims to improve the system performance of SFBC OFDM based transmission system affected by the nonlinear amplification by means of the iterative decoding. It will be showed that the BER performance could be significantly improved even after the first iteration of the decoding process and thus, does not require the large computation processing. Moreover, also the second and the third iteration might be beneficial, especially in the strong nonlinear propagation environment.

Now, we would like to express the input signal of the receiver in the frequency domain. Let $\mathbf{Y}$ be the $N_c \times N_r$ matrix containing received signal after CP removal and OFDM demodulation. Similarly to the transmitter case, we can divide $\mathbf{Y}$ into N_g sub-blocks yielding $\mathbf{Y} = \left[\mathbf{Y}_0, \mathbf{Y}_1, \ldots, \mathbf{Y}_{N_g-1}\right]$. Then, the SFBC-OFDM system follows input-output relationship

$$\mathbf{Y}_g = \overline{\mathbf{X}}_g \mathbf{H}_g + \mathbf{W}_g, \tag{8}$$

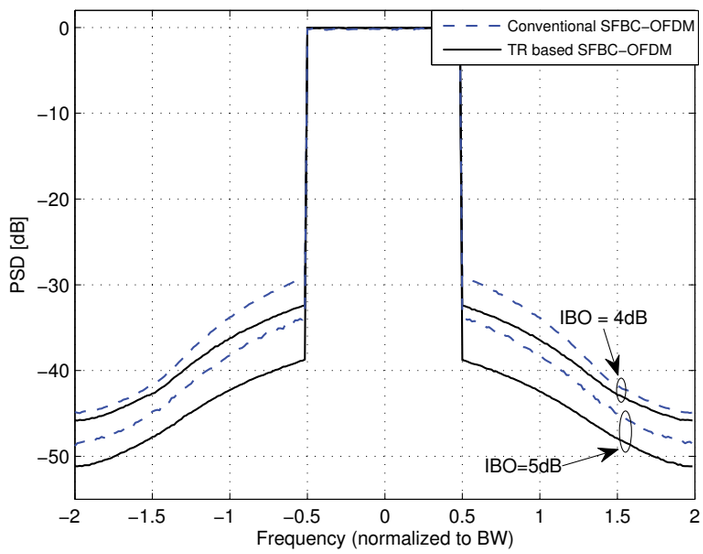

Fig. 5. PSD of a conventional and a TR-based SFBC-OFDM system obtained when a soft limiter is present. IBO={4, 5} dB.

for $g = 0, 1, \ldots, N_g - 1$. The $\mathbf{W}_g$ is $N_s \times N_r$ matrix containing noise samples with variance σ_n^2 and $\mathbf{H}_g$ is $N_t \times N_r$ matrix of path gains h_n between $n - th$ transmit and receive antenna at subcarrier frequency $g \cdot N_s$.
From (3) and (8), the signal in the frequency domain at the output of OFDM demodulator can be rewritten as

$$\mathbf{Y}_g = (\mathbf{X}_g + \mathbf{D}_g)\mathbf{H}_g + \mathbf{W}_g, \tag{9}$$

where noise term $\mathbf{D}_g$ is the frequency domain representation of nonlinear distortion. Hence, the maximum likelihood sequence detector has to find codeword $\tilde{\mathbf{X}}_g$ that minimises frobenius norm as

$$\tilde{\mathbf{X}}_g = \arg\min_{\forall \check{\mathbf{X}}_g} \left|\left| \mathbf{Y}_g - \left(\check{\mathbf{X}}_g \mathbf{H}_g + \mathbf{D}_g \mathbf{H}_g \right) \right|\right|_F, \tag{10}$$

where $\check{\mathbf{X}}_g$ is any possible transmitted codeword Drotár et al. (2010b). Using a full search to find the optimal codeword is computationally very demanding. However, if we assume that receiver knows NLD it can be compensated in decision variables. Since $\mathbf{D}_g$ is deterministic it does not play any role in ML detector. Orthogonal SFBC coding structure that we have considered make it possible to implement a simpler per-symbol ML decoding Giannakis et al. (2007); Tarokh et al. (1999). It can be shown Drotár et al. (2010b) that transmitted symbols to be decoded separately with small computional complexity as follows

$$\tilde{s}_{g,k} = \arg\min_{\forall \check{s}} \left|\left| \tilde{y}_{g,k} - d_{g,k} - \kappa \sum_{n=1}^{N_t} |h_n|^2 \check{s}_{g,k} \right|\right|. \tag{11}$$

Here, $\tilde{y}_{g,k}$ is $k - th$ entry of $\tilde{\mathbf{Y}}_g$ and $d_{g,k}$ is $k - th$ entry of $\mathbf{d}_g$ computed as

$$\mathbf{d}_g = \mathbf{D}_g^{'} \mathbf{H}_g^H. \tag{12}$$

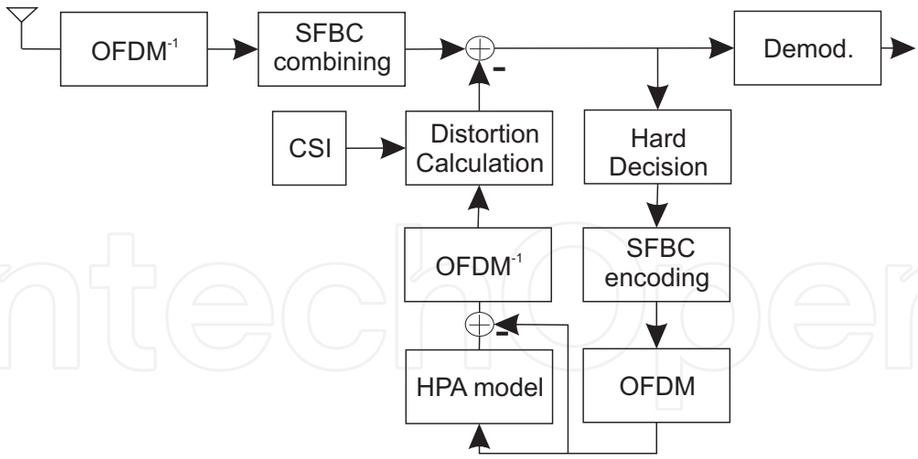

Fig. 6. Proposed SFBC-OFDM receiver structure for iterative detection of nonlinearly distorted signals

Term $\mathbf{D}_g^{'}$ is obtained from $\mathbf{D}_g$ by conjugating second half of $\mathbf{D}_g^{(\mathbf{H})}$ entries. In practice the receiver does not know $\mathbf{D}_g^{(\mathbf{H})}$. However, if receiver knows the transmit nonlinear function, it can be estimated from the received symbol vector $\mathbf{Y}_g$.
Let us assume, that complex characteristics of HPA $g(\cdot)$ and channel frequency responses are known. Then, taking into account these assumptions, the nonlinear iterative detection procedure will consist of the following steps:

1. Compute the estimation $\tilde{s}_{g,k}^{(i)}$ of the transmitted symbol $s_{g,k}$ by the hard decisions applied to signals at the output of SFBC decoder according :

$$\tilde{s}_{g,k}^{(i)} = \left\langle \tilde{y}_{g,k} - \tilde{d}_{g,k}^{(i-1)} \right\rangle \tag{13}$$

   The symbols $< \cdot >$ and i denote the hard decision operation and the iteration number, respectively. The estimated distortion terms $\tilde{d}_{g,k}^{(i)}$ are assumed to be zero for $i = 1$.

2. Compute the estimation $\tilde{\mathbf{D}}_g$ of the nonlinear distortion terms $\mathbf{D}_g$

$$\tilde{\mathbf{D}}_g = FFT\left(\tilde{\bar{\boldsymbol{x}}}_g - \tilde{\boldsymbol{x}}_g\right)$$

   where $\tilde{\boldsymbol{x}}_g$ is obtained by taking the IFFT of block $\tilde{\mathbf{s}}_g^{(i)} = \left[\tilde{s}_{g,0}^{(i)}, \ldots, \tilde{s}_{g,K-1}^{(i)}\right]$ after SFBC encoding and $\tilde{\bar{\boldsymbol{x}}}_g = g\left(\tilde{\boldsymbol{x}}_g\right)$.

3. Go to step 1 and compute $\tilde{s}_{g,k}^{(i+1)}$.

The block scheme of the proposed iterative receiver is depicted in Fig. 6. The iterative process is stopped if $BER(i+1) = BER(i)$ or if the BER is acceptable from an application point of view.
Figure 7 shows the performance of the proposed method for different iterations with {16, 64}-QAM and Rapp model of HPA operating at IBO = 5 dB. We assume convolutionaly coded system. Most of the performance improvement is achieved with first and second

iteration for 16-QAM and 64-QAM, respectively. When more iterations are applied, no further performance improvement is observed. Incremental gains diminish after the first for 16-QAM and second iteration for 64-QAM, respectively. This can be explained by the reasoning that some OFDM blocks are too badly distorted for the iterative process to converge and more iterations will not help.

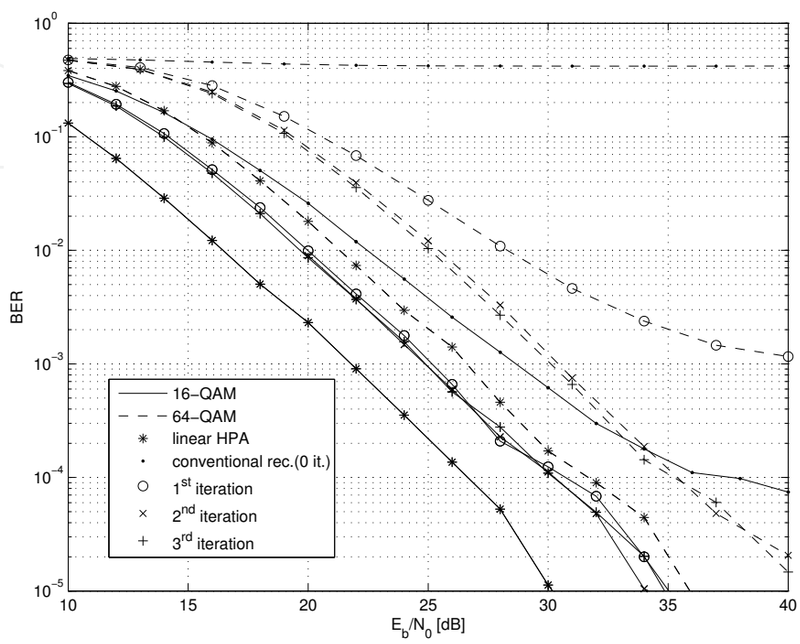

Fig. 7. BER performance of a coded SFBC-OFDM system with a Rapp nonlinearity operating at IBO=5 dB for {16, 64}-QAM and for {1, 2, 3 } of iterations. HPA characteristics is perfectly known at the receiver.

7. Extension of iterative nonlinear detection

7.1 Spatial multiplexing

In the previous section, we have assumed MIMO SFBC-OFDM systems. However, if our aim is to increase capacity of system better solution is to use Spatial Multiplexing (SM) MIMO-OFDM systems. Unfortunately, as long as the fundamental operation of SM MIMO-OFDM remains identical to conventional OFDM, the SM MIMO-OFDM transmitted signal suffers from nonlinear distortion.

It was shown that we can estimate distortion term by using received signal and characteristic of HPA. The estimated distortion term can be afterwards cancelled from the received distorted signal. When the estimation is quite accurate cancellation results in reduction of in-band nonlinear distortion. The very similar approach can be taken also for SM MIMO-OFDM systems.

The procedure of iterative detection is illustrated in Figure 8 and can be described as follows:

1. First, received signal is processed in OFDM demodulator followed by equalisation technique such as zero forcing or minimum mean square error.

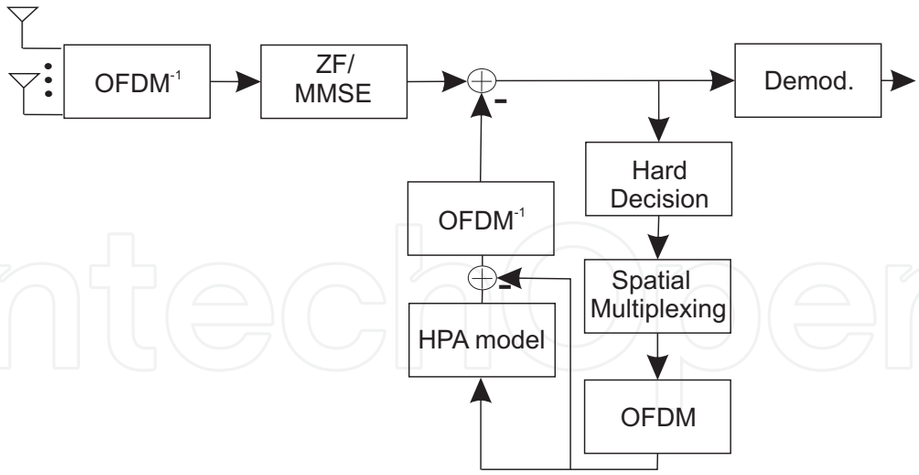

Fig. 8. Proposed receiver structure for iterative detection of nonlinearly distorted signals in SM MIMO-OFDM.

2. The estimation of transmitted symbol is computed by means of hard decision applied to symbol at the output of the detector.
3. Further, transmitter processing is modelled in order to obtain estimate of transmitted symbol that allows to compute distortion term, when HPA characteristics is known at the receiver.
4. Finally, distortion term in frequency domain is subtracted from the signal at the output of detector.
5. Whole procedure can be repeated to obtain additional improvement.

To evaluate the performance of the proposed detection, let us consider the coded SM MIMO-OFDM system with $N_c = 128$ subcarriers and 2 transmit and 2 receive antennas performing with Rapp nonlinearity. Figure 9 shows the simulation results for Rapp nonlinearity operating at IBO=4 dB using 16-QAM. The results are reported for $1, 2, 3$ iterations of proposed cancellation technique. The results of conventional receiver are also shown as a reference. It can be seen that proposed technique provides a serious performance improvement even with the first iteration.

7.2 Application to improve BER of tone reservation for SFBC OFDM using null subcarriers

As was indicated in section 5 addition of correcting signal to the SFBC encoded signals may result in loss of orthogonality, thereby eventually degradate BER performance of the system. The probability of erroneous detection is increased because correcting signal represents additive distortion - tone reservation distortion (TRD). In this section, we attempt to cancel this distortion at the receiver side of SFBC-OFDM transmission system.

Let us recall from section 5, the SFBC coded signal vectors $\mathbf{x}_n$, for $n = 1, \ldots, N_t$ to be transmitted from N_t antennas in parallel at N_c subcarriers. These signals carry zero symbols at subcarriers positions defined by $\mathcal{Q}_{R,n}$. The correcting signal in frequency domain $\mathbf{u}_n$ is added to the data signal. The position of nonzero correcting symbols in $\mathbf{u}_n$ is given by $\mathcal{Q}_{R,n}$. Therefore, the signal to be transmitted from n-th antenna can be described as

$$\mathbf{x}_n + \mathbf{u}_n. \tag{14}$$

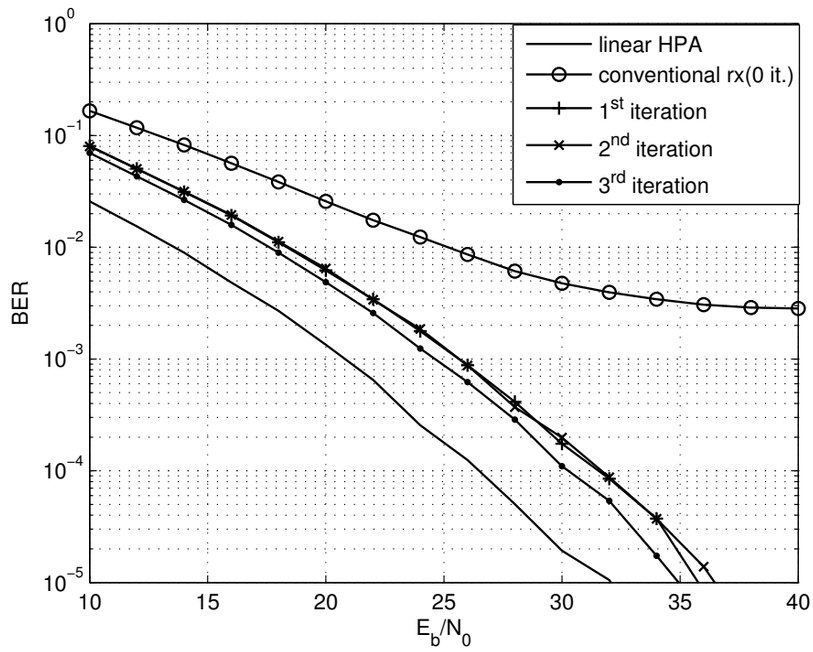

Fig. 9. BER performance of a coded SM MIMO-OFDM system with a Rapp nonlinearity operating at IBO=4 dB, 16-QAM and for {1, 2, 3 } iterations. HPA characteristic is perfectly known at the receiver.

Let us assume only one receive antenna. Then, the received signal in the frequency domain is

$$\mathbf{Y} = \sum_{n=1}^{N_t} (\mathbf{x}_n + \mathbf{u}_n + \mathbf{d}_n) \odot \mathbf{h}_n + \mathbf{w}_n. \tag{15}$$

Here $\mathbf{d}_n$ represents the in-band nonlinear distortion, $\mathbf{h}_n$ is the channel frequency response between n-th transmit and receive antenna, $\mathbf{w}$ is vector of AWGN noise samples and $\odot$ stands for element-wise multiplication. The best way how to limit the influence of TRD, represented by $\mathbf{u}_n$, on decision variable is to cancel it from received signal. However, in order to subtract TRD from received signal correcting signal has to be known. The feasible approach is to obtain the estimate of correcting signal by means of iterative estimation and then cancel it from received signal. The background and details of process of iterative estimation and cancellation were treated in detail in the section 6 for the matter of nonlinear distortion. Now, we will apply the same concept in the straight-forward manner for TRD.

Similarly to Figure 4, in Figure 10 we show the maximal available amplitudes of correcting signal, that can be used in conjunction with TRD cancellation technique. As it can be seen from Figure 10 the combination of TRD cancellation and convolutional coding for 64-QAM leads to higher affordable amplitudes in comparison with only coding application. Moreover, the combination of these approaches makes it possible to use TR technique with no spectral broadening also for 256-QAM modulation.

Finally, we present performance results for uncoded SFBC-OFDM employing three transmit antennas and $\mathbf{C}_{334}$ code. Rapp model of the HPA operating at IBO=5 dB is assumed. In this

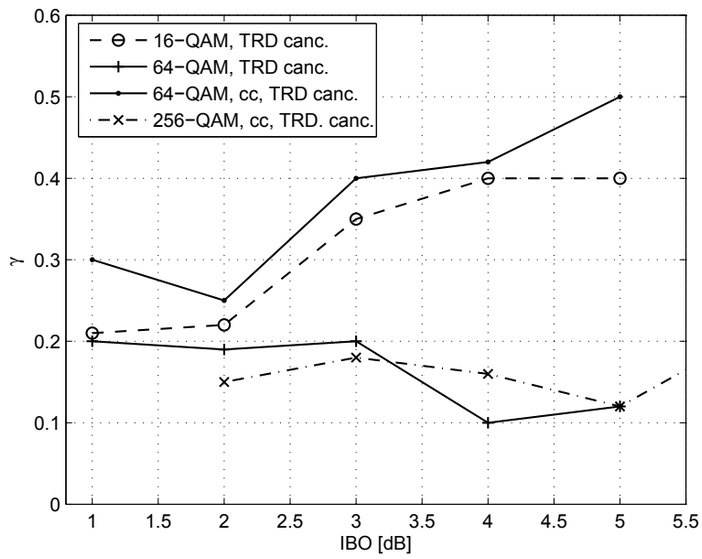

Fig. 10. Maximal normalized amplitude of reserved tones for various IBO satisfying $BER_{TR} \leq BER_{conv}$, TRD cancellation technique applied at the receiver

case, the both techniques for reduction of nonlinear distortion introduced in this thesis i.e. tone reservation with no spectral broadening and the iterative receiver technique are applied. BER curves for assumed scenario are depicted in Figure 11. As reported results indicate the best BER performance is achieved when the iterative receiver for estimation and cancellation

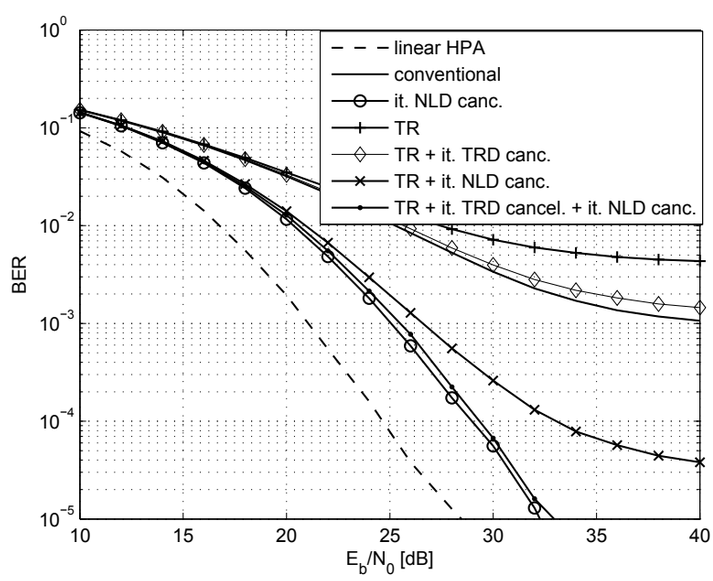

Fig. 11. BER vs. E_b/N_0 for uncoded SFBC-OFDM employing three transmit antennas and $\mathbf{C}_{334}$ code. Rapp model of HPA operating at IBO=5. HPA characteristics is perfectly known at the receiver.

of NLD (it. NLD canc.) is used. This is illustrated by a curve with circle marker. However, applying only the receiver technique does not bring any reduction in out-of-band radiation at the transmitter side. Therefore, TR with no spectral broadening was applied at the transmitter. Amplitude of correcting tones was constraint to $\gamma = 0.2$, but this results in increased BER for the Rapp nonlinearity operating at IBO=5 dB. Increase in BER is noticeable for TR with no spectral broadening when compared to the conventional system and also for application of TR together with iterative NLD cancellation compared to iterative NLD cancellation without TR. Fortunately, this can be solved by application of the receiver cancellation of TRD. Then, the dotted marker BER curve represents results for the application of both the transmitter and the receiver based methods. As can be seen from the figure significant BER performance reduction is obtained, moreover out-of-band radiation reduction is also achieved.

8. Conclusion

This chapter deals with the nonlinear impairments occuring in OFDM MIMO transmission. We present the brief overview of several PAPR reduction methods. The major contribution of this chapter is the introduction of two strategies, capable of mitigating the nonlinear impairments occuring in MIMO OFDM based transmission system. The fundamental idea of the former one is to use the null subcarriers for the reduction of the out-of-band radiation. The latter method, employed in the detector, improves significantly the BER performance of the MIMO-OFDM system degradaded by HPA nonlinearities. Finally, we present their joint impact on overall performance of MIMO-OFDM sytem operating over nonlinear channel. We show that the application of these methods is specially vital in the broadcast cellular standards, such as WiMAX, and therefore we believe that this contribution might be of interest to the readers and researchers working in this area.

9. Acknowledgments

Work was supported by VEGA Advanced Signal Processing Techniques for Reconfigurable Wireless Sensor Networks, VEGA 1/0045/10, 2010 Ű 2011.

10. References

Baytekin, B. & Meyer, R. G. (2005). Analysis and simulation of spectral regrowth in radio frequency power amplifiers, *IEEE J. Solid-State Circuits* 40: 370–381.

Bittner, S., Zillmann, P. & Fettweis, G. (2008). Equalisation of MIMO-OFDM signals affected by phase noise and clipping and filtering, *Proc. IEEE Int. Conf on Communications*, Beijing, China, pp. 609–614.

Dardari, D., Tralli, V. & Vaccari., A. (2000). A theoretical characterization of nonlinear distortion effects in OFDM systems, *IEEE Trans. Commun.* 48: 1755–1764.

Deumal, M., Behravan, A., Eriksson, T. & Pijoan, J. (2008). Evaluation of performance capabilities of PAPR reducing methods, *Wireless Personal Communications* 47(1): 137–147.

Drotar, P., Gazda, J. & et. al. (2010a). Receiver based compensation of nonlinear distortion in MIMO-OFDM, *Proc IEEE Int. Microwave Workshop Series on RF Front-ends for Software Defined and Cognitive Radio Solutions*, Aveiro, Portugal, pp. 53–57.

Drotár, P., Gazda, J. & et. al. (2010b). Receiver technique for iterative estimation and cancellation of nonlinear distortion in MIMO SFBC-OFDM systems, *IEEE Trans. Consum. Electron.* 56: 10–16.

Fischer, R. F. & Hoch, M. (2006). Directed selected mapping for peak-to-average power ratio reduction in MIMO OFDM, *IEE Electronics Lett.* 42: 1289–1290.

Giannakis, G. B., Liu, Z., Ma, X. & Zhou, S. (2007). *Space-time coding for broadband wireless communications*, John Wiley & Sons, Hoboken, USA.

Han, S. H. & Lee, J. H. (2006). PAPR reduction of OFDM signals using a reduced complexity PTS technique, *IEEE Signal Process. Lett.* 11: 887–890.

Hassan, E., El-Khamy, S., Dessouky, M., El-Dolil, S. & El-Samie, F. A. (2009). Peak-to-average power ratio reduction in spaceŰtime block coded multi-input multi-output orthogonal frequency division multiplexing systems using a small overhead selective mapping scheme, *IET Communications* 3: 1667–1674.

Jafarkhani, H. (2005). *Space - Time Coding: Theory and Practice*, Cambridge University Press, New York, USA.

Khan, F. (2009). *LTE for 4G mobile broadband*, Cambridge University Press, Cambridge.

Krongold, B. S., Woo, G. R. & et. al. (2005). Fast active constellation extension for MIMO-OFDM PAR reduction, *Proc. IEEE Int. Conference on Communications*, pp. 1476 – 1479.

Kwon, U. I., Kim, K. & Im, G.-H. (2009). Amplitude clipping and iterative reconstruction of MIMO-OFDM signals with optimum equalization, *IEEE Trans. Wireless Commun.* 8(1): 268–277.

Kwon, U. K. & Im, G. H. (2006). Iterative amplitude reconstruction of clipped OFDM signals with optimum equalization, *IEE Electronics Lett.* 42: 1189–1190.

Latinović, Z. & Bar-Ness, Y. (2006). SFBC MIMO-OFDM peak-to-average power ratio reduction by polyphase interleaving and inversion, *IEEE Commun. letters* 10: 266–268.

Lee, Y.-L., You, Y.-H. & et.al. (2003). Peak-to-average power ratio in MIMO-OFDM systems using selective mapping, *IEEE Commun. letters* 7: 575–577.

Li, Z. & Xia, X.-G. (2008). Single-symbol ML decoding for orthogonal and quasi-orthogonal stbc in clipped MIMO-OFDM systems using a clipping noise model with gaussian approximation, *IEEE Trans. Commun.* 56: 1127–1137.

Liu, Z., Xin, Y. & Giannakis, G. B. (2002). Space-time-frequency coded OFDM over frequency-selective fading channels, *IEEE Trans. on Signal Processing* 50: 2465–2476.

Muller, S. H. & Huber, J. B. (1997). OFDM with reduced peak-to-average power ratio by optimum combination of partial transmit sequences, *IEE Electronics Lett.* 33: 36–39.

Ochiai, H. & Imai, H. (2001). On the distribution of the peak-to-average power ratio in OFDM signals, *IEEE Trans. Commun.* 49: 282–289.

Schenk, T., Smulders, P. & Fledderus, E. (2005). Peak-to-average power reduction in space division multiplexing based OFDM systems through spatial shifting, *Electronic letters* 41: 860–861.

Siegel, C. & Fischer, R. F. H. (2008). Partial transmit sequences for peak-to-average power ratio reduction in multiantenna OFDM, *EURASIP Journal on Wireless Communications and Networking* 2008: 1–11.

Tarokh, V., Jafarkhani, H. & Calderbank, A. R. (1999). Space - time block codes from orthogonal designs, *IEEE Trans. Inf. Theory* 45: 1456–1467.

Tellado, J. (2000). *Peak-to-average Power Reduction for Multicarrier modulation*, PhD thesis, Stanford Univeristy, Stanford.

Tsiligkaridis, T. & Jones, D. L. (2010). PAPR reduction performance by active constellation extension for diversity MIMO-OFDM systems, *Journal of Electrical and Computer Engineering* 2010: 5–9.

Wang, S.-H. & Li, C.-P. (2009). A low-complexity PAPR reduction scheme for SFBC MIMO-OFDM systems, *IEEE Signal Proc. letters* 16: 941–945.

Zhang, H. & Goeckel, D. L. (2007). Peak power reduction in closed-loop MIMO-OFDM systems via mode reservation, *IEEE Commun. Lett.* 11: 583–586.

Zhou, G. T. & Raich, R. (2004). Spectral analysis of polynomial nonlinearity with applications to rf power amplifiers, *EURASIP Journal on Applied Signal Processing* 12: 1831–1840.

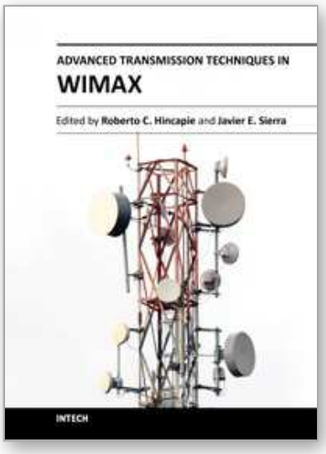

Advanced Transmission Techniques in WiMAX

Edited by Dr. Roberto Hincapie

ISBN 978-953-307-965-3

Hard cover, 336 pages

Publisher InTech

Published online 18, January, 2012

Published in print edition January, 2012

This book has been prepared to present the state of the art on WiMAX Technology. The focus of the book is the physical layer, and it collects the contributions of many important researchers around the world. So many different works on WiMAX show the great worldwide importance of WiMAX as a wireless broadband access technology. This book is intended for readers interested in the transmission process under WiMAX. All chapters include both theoretical and technical information, which provides an in-depth review of the most recent advances in the field, for engineers and researchers, and other readers interested in WiMAX.

How to reference

In order to correctly reference this scholarly work, feel free to copy and paste the following:

Peter Drotár, Juraj Gazda, Dušan Kocur and Pavol Galajda (2012). Reduction of Nonlinear Distortion in Multi-Antenna WiMAX Systems, Advanced Transmission Techniques in WiMAX, Dr. Roberto Hincapie (Ed.), ISBN: 978-953-307-965-3, InTech, Available from: http://www.intechopen.com/books/advanced-transmission-techniques-in-wimax/reduction-of-nonlinear-distortion-in-multi-antenna-wimax-systems

INTECH
open science | open minds

InTech Europe
University Campus STeP Ri
Slavka Krautzeka 83/A
51000 Rijeka, Croatia
Phone: +385 (51) 770 447
Fax: +385 (51) 686 166
www.intechopen.com

InTech China
Unit 405, Office Block, Hotel Equatorial Shanghai
No.65, Yan An Road (West), Shanghai, 200040, China
中国上海市延安西路65号上海国际贵都大饭店办公楼405单元
Phone: +86-21-62489820
Fax: +86-21-62489821