We are IntechOpen, the world's leading publisher of Open Access books Built by scientists, for scientists

4,800
Open access books available

122,000
International authors and editors

135M
Downloads

154
Countries delivered to

Our authors are among the

TOP 1%
most cited scientists

12.2%
Contributors from top 500 universities

WEB OF SCIENCE™

Selection of our books indexed in the Book Citation Index in Web of Science™ Core Collection (BKCI)

Interested in publishing with us? Contact book.department@intechopen.com

Numbers displayed above are based on latest data collected.
For more information visit www.intechopen.com

Inter-RAT Handover Between UMTS And WiMAX

Bin LIU and Philippe Martins
Télécom ParisTech - École Nationale Supérieure des Télécommunications
France
Philippe Bertin and Abed Ellatif Samhat
France Telecom Research and Development
France

1. Introduction

The future beyond third generation (B3G) or fourth generation (4G) systems will consist of different radio access technologies, such as GSM/GPRS, UMTS, WiFi, and WiMAX. Many intensive efforts have been made to identify the unsolved issues about the future mobile systems, and one important issue is what the future vertical handover management solution will be. A variety of mobility management solutions have been proposed, such as MIPv6/FMIPv6 (D. Johnson, et al., 2004; R. Koodli, 2005), SCTP (M. Afif, et al., 2006), inter-RAT (Radio Access Technologies) handover of 3GPP (3GPP TS 43.129; 3GPP TR 25.931). Among these solutions, the layer 2 inter-RAT handover solution of 3GPP is a promising way for its high reliable handover procedure. Unfortunately, the 3GPP inter-RAT solutions only support inter-RAT handover between cellular networks, and do not support inter-RAT handover between WiMAX (Worldwide Interoperability for Microwave Access) and UMTS (Universal Mobile Telecommunications System).

Another important issue is the interworking architecture and the coupling scenario that are used to provide an efficient inter-RAT handover management. Depending on where is the coupling point, there are several interworking architectures: no coupling, loose coupling, tight coupling, very tight coupling (integrated coupling) (G. Lanpropoulos, et al., 2005). The loose coupling and tight coupling architectures often use Mobile IP or part of Mobile IP as the handover management protocol. So these two kinds of coupling architectures require less complicated modifications to the existing protocol stacks and are more flexible than integrated coupling. However, they often suffer from longer handover latency varying from some hundreds of milliseconds to some seconds. The integrated coupling generally achieves better handover performance at expense of adding complex modification to existing network protocol stacks.

In recent years, the 3GPP and IEEE organizations have proposed their respective interworking solutions for convergence of heterogeneous networks. For instance, the ongoing 3GPP standard for interworking between UMTS and WiFi (3GPP TS 23.234) only focuses on the control plane, and defines the interworking topologies, access gateways,

AAA, charging, interfaces and so on. It does not provide a scheme to resolve the handover problems in the user plane, like packet loss, long handover latency. Another promising vertical handover solution is IEEE 802.21 (IEEE 802.21, 2006). This standard defines a generic link layer to mask the heterogeneities of various RATs as well as three kinds of services. How to resolve handover problems is still manufactures' task. For these reasons, in this chapter, we will only focus on the user plane instead of control plane, and propose an inter-RAT handover solution to resolve some typical handover problems. Besides, our inter-RAT handover solution can be applied to a variety of interworking scenarios in addition to the integrated and tight coupling architectures. This solution is a novel solution for interworking between UMTS and WiMAX, which has not been stated by other references or standards.

In section 2, we firstly summarize the features of 3GPP Packet Switched (PS) network/cell switch procedures, i.e. reselection and handover, and then we get some guides to the design of inter-RAT handover mechanism between UMTS and WiMAX. The PS handover is introduced in order to support real-time packet-switched traffics with strict QoS requirements on low latency and packet loss. For one thing, the handover reduces the service interruption of the user plane information when cell changes compared to the cell reselection; for another, it enables buffer handling of user plane data in order to reduce packet loss when cell changes. For unreal-time services with loose QoS requirements on packet loss, or Mobile Station (MS) is not in dedicated state, the PS cell reselection is introduced. Compared to PS handover, the cell reselection suffers from uncertain packet loss, but benefits from the reduced signaling and resource overhead between cells or RATs.

Next, in section 3 and 4 respectively, based on the requirements of inter-RAT handover between UMTS and WiMAX, we propose a novel layer 2 inter-RAT handover scheme by introducing a novel common sublayer named IW (InterWorking) sublayer and SR ARQ (Selective Repeat ARQ) mechanism in the integrated and tight coupling architectures to resolve several typical inter-RAT handover problems, such as packet loss, long handover latency. The better handover performance is validated by the simulation results carried out on the NS2 emulator. In addition, this novel IW sublayer scheme also eliminates the false fast retransmission, which is due to packet loss or out-of-order packet arrivals during a handover period.

Finally, we come to our conclusions in section 5.

2. 3GPP Handover Features

This section mainly describes procedures that are used by the MS to select a suitable cell to be connected to in the 3GPP cellular networks. For details, please refer to references (3GPP TS 25.331; 3GPP TS 43.129; 3GPP TS 44.060; 3GPP TR 25.931; J.P Romero, et al., 2005).

When a MS is switched on, it must first select a PLMN (Public Land Mobile Network) and a RAT (Radio Access Technology) automatically or manually. It searches for the most adequate cells so as to camp on a suitable cell. Then the MS will register its presence in the registration area of the chosen cell if necessary. As long as the MS remains in idle mode, it will continuously execute the cell reselection procedures in order to choose and camp on the most suitable cell of the selected PLMN. The events triggering the cell reselection may due to high path loss, downlink signaling failure and so on. If the new cell is in a different registration area, a Location Registration (LR) request is performed (3GPP TS 23.122).

When the MS is in the packet transfer or dedicated mode, the network use PS Handover to command a MS to move from its source cell to a new cell, and continue the ongoing PS service operation in the new cell. The handover trigger conditions could be serving cell resource limitation, measurement reports from a MS, and the cell change notification from a MS. This handover procedure between cells of the same RAT is also referred to as *intra-RAT handover*.

Depending on the PLMN availability and network configuration, it is possible that cell reselection and handover procedures involve a cell switch from one RAT to another RAT (e.g., from 2G GSM/GPRS/EDGE to 3G UMTS networks). The handover procedure between cells of different RATs is referred to as *inter-RAT handover* in 3GPP standards or *vertical handover* in IETF protocols.

In general, in contrast with the cell reselection, the intra-RAT handover and inter-RAT handover of 3GPP have the following distinct features:

- The network makes the handover decision depending on the measurement reports, network states and negotiation with target base station or cell.
- The network controls the whole handover procedure, including message transfer, handover timing, handover target, resource allocation, and context transfer.
- Only packet transfer mode or dedicated mode needs the handover procedure due to handover overheads.
- The handover can be considered as a kind of specific QoS-guaranteed cell reselection procedure.

It should be stressed that Mobile IPv6 and its extensions (D. Johnson, et. al., 2004; R.Koodli, 2005) support both network-initiated and terminal-initiated handover procedures. In this chapter, we only consider 3GPP inter-RAT handover procedures initiated by the network.

The conventional 3GPP inter-RAT handover procedure must involve the SGSN, whether for handover from GSM/GPRS to UMTS or from UMTS to GSM/GPRS. This is because the Link Control Sublayer (LLC) terminates at SGSN, which is in charge of making lossless packets forwarding during the MS mobility thanks to its retransmission mechanism. This is not a problem for GSM/GPRS or UMTS core network, because the SGSN is their common network entity. But for inter-RAT handover between 3GPP cellular network and IEEE wireless IP network like WiFi/WiMAX, it becomes a challenge for the packet lossless RAT switch procedure due to the lack of SGSN in IEEE wireless network. In the following sections, we utilize the 3GPP inter-RAT handover procedure, messages and signaling to resolve this problem for two typical coupling network architectures: integrated coupling and tight coupling.

3. Inter-RAT Handover between UMTS and WiMAX in Integrated Coupling Architecture

In order to realize a seamless inter-RAT handover for future B3G or 4G mobile networks, a variety of interworking architectures and inter-RAT handover mobility managements have been proposed. Based on the integrated architecture, in this section, a novel common interworking sublayer (IW sublayer) is proposed at Layer 2 on RNC and MS to provide a seamless PS inter-RAT handover between UMTS and WiMAX systems. This IW sublayer scheme focuses on eliminating packet loss and reducing handover latency that are common problems for most inter-RAT handover scenarios. Compared with other context transfer

schemes, the simulation results show the IW sublayer with ARQ mechanism can achieve a lossless and prompt handover procedure. In addition, this IW sublayer scheme can eliminate false fast retransmission of TCP traffics that is usually caused by packet losses or out-of-order packet arrivals. In what follows, the IW sublayers in integrated and tight coupling architectures are specified in this section and section 4 respectively.

3.1 Context Transfer

The problems during the inter-RAT handover period have been extensively studied in (G. Lanpropoulos, et al., 2005; S.L. Tsao, et al., 2002; N. Dailly, et al., 2006; J. Sachs, et al., 2006; H. Inaura, et al., 2003; H. Rutagemwa, et al., 2007), such as long handover latency, BDP (Bandwidth Delay Product) mismatch, delay spikes, packet losses, premature timeout, false fast retransmission. Among these problems, the packet losses and long handover latency are in particular not desirable for real-time and throughput-sensitive traffics. The most common solution is applying the context transfer mechanism (J. Sachs, et al., 2006; R. Koodli, 2005) or retransmission (3GPP TS 25.323; N. Dailly, et al., 2006) to accelerate the handover process or reduce the amount of lost packets. There exist the following typical context transfer and retransmission schemes: PDCP Synchronization, buffering-and-forwarding (B&F), SDU Reconstruction, R-LLC.

PDCP Synchronization: In 3GPP UMTS network (3GPP TS 25.323), the PDCP sublayer is applied to guarantee reliable data transmission service during Service Radio Network Subsystem (SRNS) relocation. For this purpose, PDCP maintains PDCP sequence numbers to avoid any data losses during SRNS relocation. After the successful relocation, the data transmission starts from the (first) unconfirmed SDU having a sequence number equal to the next expected sequence number by the PDCP entity. For instance, in the uplink, if some transmitted SDUs are still left unacknowledged, the data transmission is resumed by retransmission of the SDU with the "uplink send" sequence number equal to the uplink receive sequence number. Otherwise, the data transmission is resumed with the transmission of the first unsent SDU. Moreover, when the RLC entities mapped to a lossless PDCP entity are reset or reestablished for reasons other than SRNS relocation, then it is the PDCP's responsibility that the peer lossless PDCP entities do not go out of synchronization by the means of "PDCP sequence number synchronization procedure" (3GPP TS 25.323).

The retransmission mechanism of PDCP works well when a MS performs SRNS relocation during data transmission in the domain of UMTS. Unfortunately, in the scenario of inter-RAT handover, the PDCP will not take effect any more because:

- The other heterogeneous network system usually does not have the similar mechanism, especially IEEE 802 RATs such as WiMAX or WiFi.
- In addition, the WiMAX system has its own IP packet header compression mechanism rather than ROHC (3GPP TS 25.323) in UMTS. If the packets or frames stored in the source system with their particular headers and control signaling parts are forwarded to the target systems directly, the target system may discard these unreadable packets, which will induce sequence number asynchronization and break down current communication connection.

In a word, the sequence number synchronization, header compression and retransmission mechanism of respective RAT complicate the inter-RAT handover procedure instead.

Buffering-and-Forwarding: R. Koodli (2005) propose to utilize buffering-and-forwarding mechanism (B&F) to forward unsent data packets from previous access router to new access

router in FMIPv6 to eliminate packet losses during a handover period. In this IP solution the packets stored at link layer of one RAT usually cannot be retrieved to the IP layer. So, generally, there usually exist packet losses if an inter-RAT handover management protocol with B&F is realized only at IP layer or above.

SDU Reconstruction: J. Sachs (2006) proposes the SDU (Service Data Unit) reconstruction scheme. In order to make a lossless handover, the segments stored in the PDU (Packet Data Unit) buffer of source link are first reconstructed back to a SDU and then forwarded to the target link as well as the SDUs from the SDU buffer. When this proposal is applied to the inter-RAT handover from UMTS to WiMAX or from WiMAX to UMTS for TCP traffics, the handover performance may still degrade, for the following reasons:

- If a PDCP (Packet Data Convergence Protocol) PDU sequence number asynchronization takes place just before an inter-RAT handover from UMTS to WiMAX, the asynchronization problem cannot be resolved by WiMAX system. This leads to an unreliable handover procedure.
- A RLC (Radio Link Control) SDU whose corresponding RLC PDUs have not be successfully transmitted in total, cannot be reconstructed and will be discarded locally, because the successfully transmitted RLC PDUs have been already removed before.
- WiMAX and UMTS systems support different header compression algorithms. That means it needs a deliberate loop back setting in respective system.

From above discussion we can see that the PDCP sequence number synchronization mechanism, which is used to assure lossless handover in UMTS system, becomes an obstacle for inter-RAT handover when the context transfer mechanism is SDU reconstruction. We may suppose the PDCP sublayer is configured in transparent mode (i.e., not attach any PDCP header, no header compression and no sequence number synchronization) when the inter-RAT handover is based on this SDU reconstruction mechanism. But, what the point of using an UMTS network without PDCP sublayer?

R-LLC: N. Dailly (2006) introduce a novel sublayer called R-LLC (Link Layer Control) locating on the BTS for handover between GPRS and WiFi is proposed. This R-LLC sublayer takes the role of conventional LLC, and retransmits packets lost during inter-RAT handover when the retransmission timer expires. The simulation results in this reference (N. Dailly, et al., 2006) demonstrate zero packet loss for handover and cell reselection procedures. However, the packet loss is only indicated by retransmission timer expiration, which usually is set to 5 sec.. Obviously, such a long period is unfavorable to keep TCP congestion window from shrinking. In addition, the configuration of retransmission window is not specified.

Since these typical context transfer or retransmission schemes do not satisfy the inter-RAT handover requirements for interworking UMTS and WiMAX, in what follows, a novel context transfer scheme is proposed at a novel common sublayer – InterWorking (IW) sublayer.

3.2 InterWorking (IW) Sublayer

3.2.1 InterWorking (IW) Sublayer Description

In order to propose a feasible way to provide a seamless handover procedure, a promising solution is designed in terms of the following principles:

- Minimize altering the existing standards and protocol stacks as far as possible.

- Consider the UMTS as the center of the integrated system and preserve its signaling and control procedures as many as possible.
- In WiMAX access network, additional network components and new signaling and primitives could be added.
- The two integrated systems should guarantee seamless service continuity, and execute mobility management processes (e.g., connection establishment, handover) as fast as possible in order to maintain the required QoS.

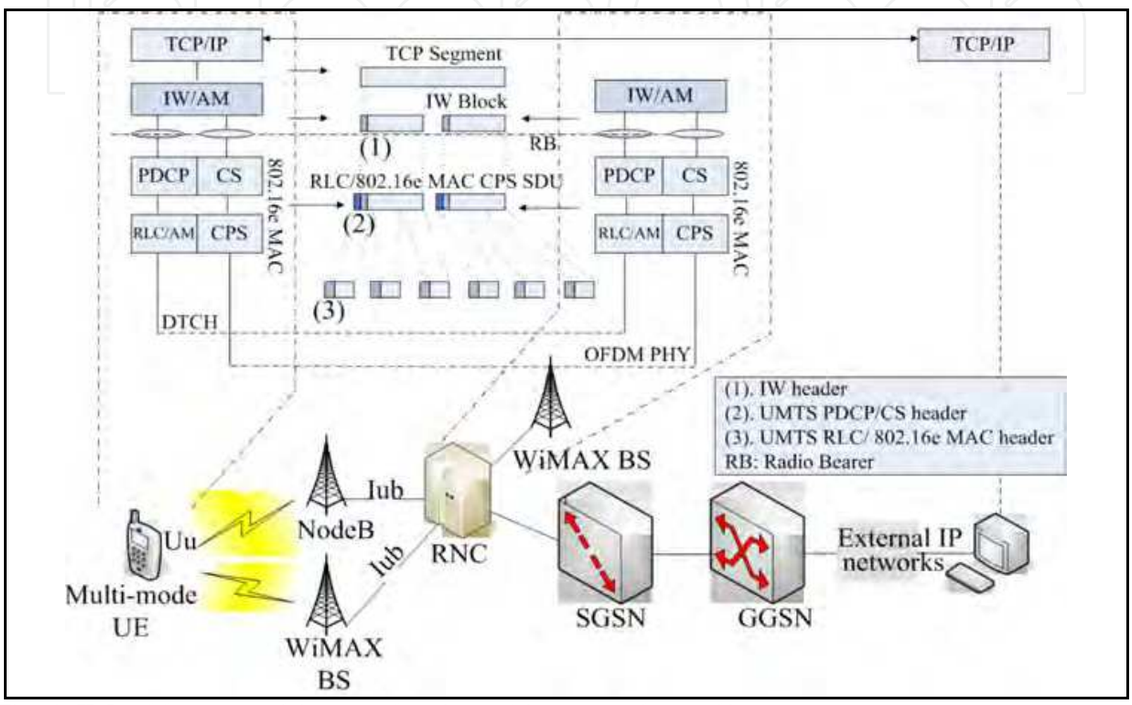

Fig. 1. IW sublayer working mechanism of integrated coupling

As stated above, our inter-RAT scheme is first based on the integrated coupling architecture. We assume UMTS to be the master home network with roaming privileges to WiMAX network. A novel common network entity named interworking sublayer (IW) is introduced on the top of PDCP (Packet Data Convergence Protocol) sublayer of UMTS and the Medium Access Control (MAC) CS sublayer of 802.16e on the RNC and MS, as shown in Fig.1. The WiMAX BS is integrated with the RNC (Radio Network Controller) through Iub interface. The IW takes the role of LLC sublayer of conventional cellular networks, such as retransmission mechanism and handover support. The main functions of IW sublayer are:

- Determination of a suitable target network.
- Primitive mapping between the IW and the UMTS network, or between the IW and the WiMAX network in case of inter-RAT handover.
- Support SR ARQ (Selective Repeat ARQ) mechanism, including packet segmentation and re-sequencing, retransmission, and retransmission window size adjustment.

In Fig. 2 and Fig. 3, the user and control planes of the proposed architectures are illustrated. It should be stressed that the SR ARQ retransmission mechanism is realized in the user plane. While in the control plane, IW sublayer shall translate handover related signaling

between source and target networks. When an inter-RAT handover is made, the IW sublayer is activated according to the QoS requirements of a PDP (Packet Data Protocol). In the control plane, we prefer to reuse the RRC protocol functionality in the MS and RNC respectively, instead of building them from scratch. What is actually needed is to enhance RRC protocol entities in order to forward inter-RAT handover primitives to IW sublayer. In order to minimize the modifications to respective systems, IW sublayer also realizes some essential WiMAX-related primitives and makes RNC act as another WiMAX BS to the WiMAX network.

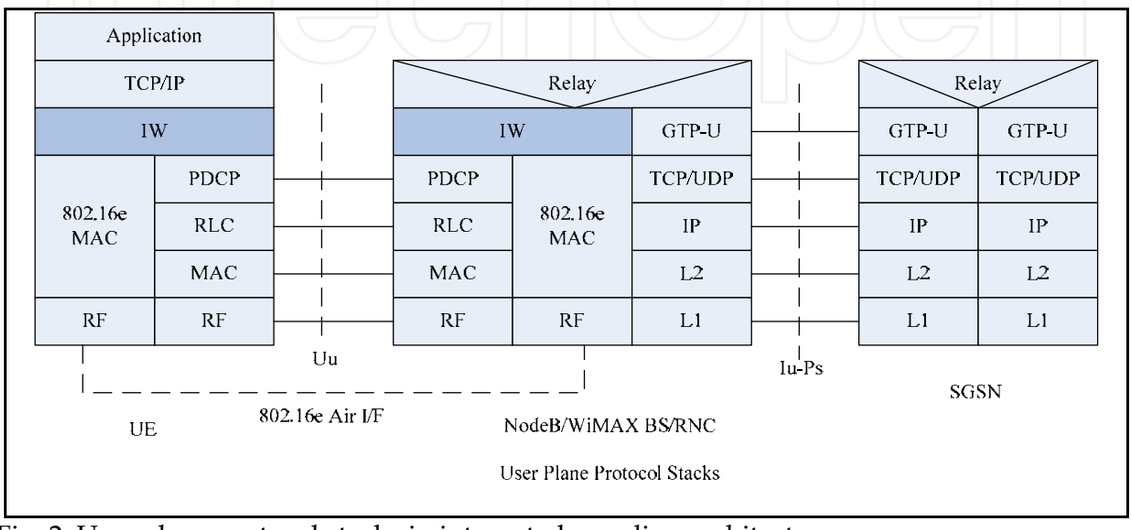

Fig. 2. User plane protocol stacks in integrated coupling architecture

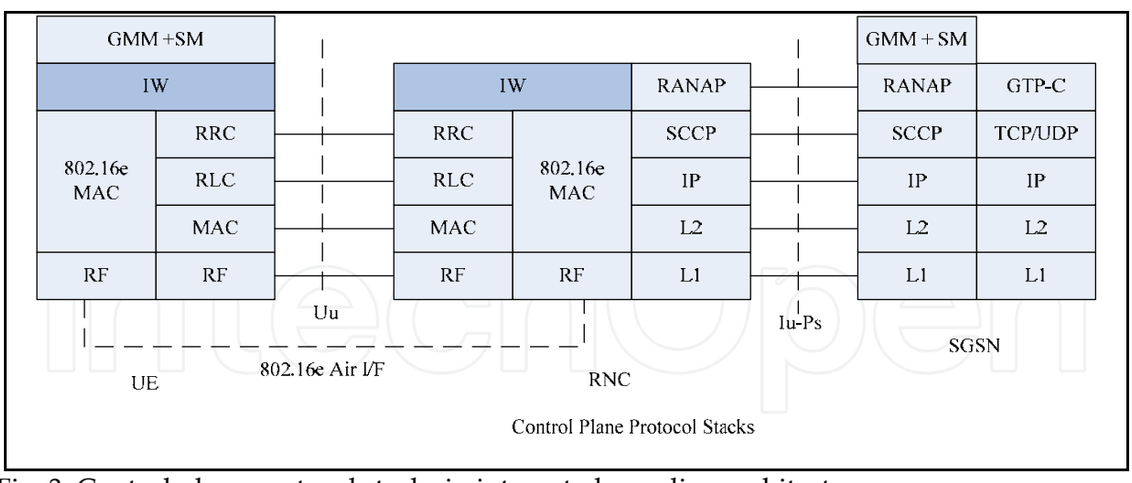

Fig. 3. Control plane protocol stacks in integrated coupling architecture

3.2.2 Signaling and Primitives

3.2.2.1 Overview

In order to have insight into IW sublayer working mechanism, this sub-clause describes the inter-RAT handover signaling procedures and primitives among IW, PDCP, RRC (Radio Resource Control) and WiMAX MAC. Some newly added cross-layer primitives are complemented to the conventional inter-RAT handover signaling procedures of 3GPP (3GPP TS 43.129; 3GPP TR 25.931). We suggest the future WiMAX and UMTS standards should support these primitives and parameters for the seamless and smooth inter-RAT handover.

Generally, the inter-RAT handover consists of handover preparation phase and handover execution phase. In the case of a handover from UMTS to WiMAX, when the inter-RAT handover conditions e.g. low RSSI or load increase, are met, the MS is instructed by the RNC to switch on its WiMAX transceiver. Then MS seeks and monitors the neighbor WiMAX BSs given in System Information Block (SIB) on BCCH of serving cell. After the WiMAX scanning intervals (IEEE 802.16e, 2005), the MS provides the network with its measurement results of the target networks using Measurement Reports message. Meanwhile, other important wireless link parameters, such as round trip time (RTT), BDP are also calculated by the RNC. After that, the inter-RAT handover will enter into execution phase if the RNC makes a positive handover decision.

3.2.2.2 Handover from UMTS to WiMAX

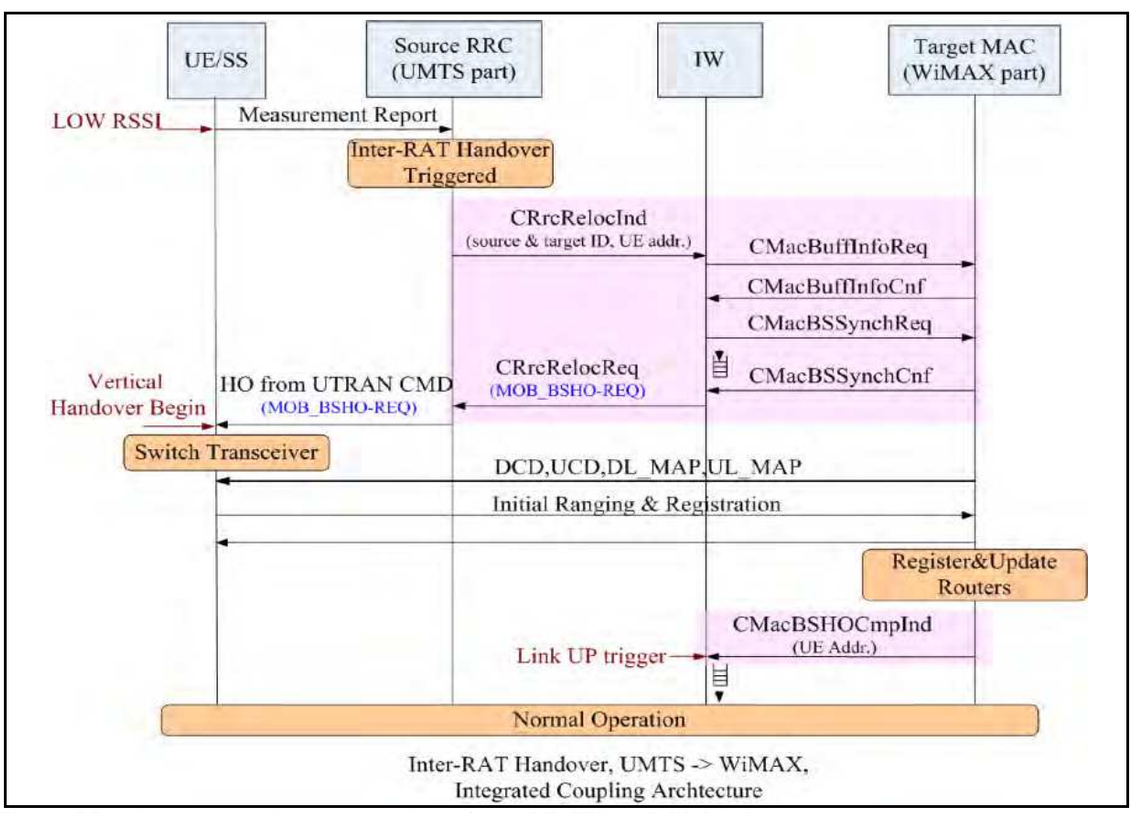

Fig. 4. Handover signaling procedure from UMTS to WiMAX

Fig. 4 describes the inter-RAT handover from UMTS to WiMAX and shows the exchanged messages and primitives.

1) Based on measurement reports and knowledge of the RAN topology, the RNC, more precisely source RRC decides to initiate an inter-RAT PS handover.

2) The source RRC sends the CRrcRelocInd primitive (contains target WiMAX cell id) to the IW sublayer.

3) Then the IW sends the CMacBuffInfoReq primitive to the target WiMAX MAC to request the buffer characteristics. The WiMAX MAC shall return the CMacBuffInfoCnf primitive to inform the IW of the buffer size in its MAC sublayer. According to this information, the IW adjusts its retransmission window size. (Note that current WiMAX MAC does not support this interface, so the IW may adjust its retransmission window size to a default value).

4) At this stage, the IW sends the CMacBSSynchReq primitive to the WiMAX MAC to negotiate the location of the dedicated initial ranging transmission opportunity for the MS. This information is returned by primitive CMacBSSynchCnf.

5) After that, the IW begins to buffer data packets that require delivery order and sends a CRrcRelocReq primitive (including Transparent Container (MOB_BSHO-REQ)) to the source RRC.

6) The RRC sends the Handover from UTRAN Command message to the MS, which includes a MOB_BSHO-REQ.

7) The MS performs hard handover and normal WiMAX network entry procedure.

8) After the provisioned service flow is activated (IEEE 802.16e, 2005), the target WiMAX MAC sends CMacBSHOCmpInd primitive as a Link_Up (LU) trigger to the IW sublayer. On this trigger, the IW shall restart data packet forwarding.

3.2.2.3 Handover from WiMAX to UMTS

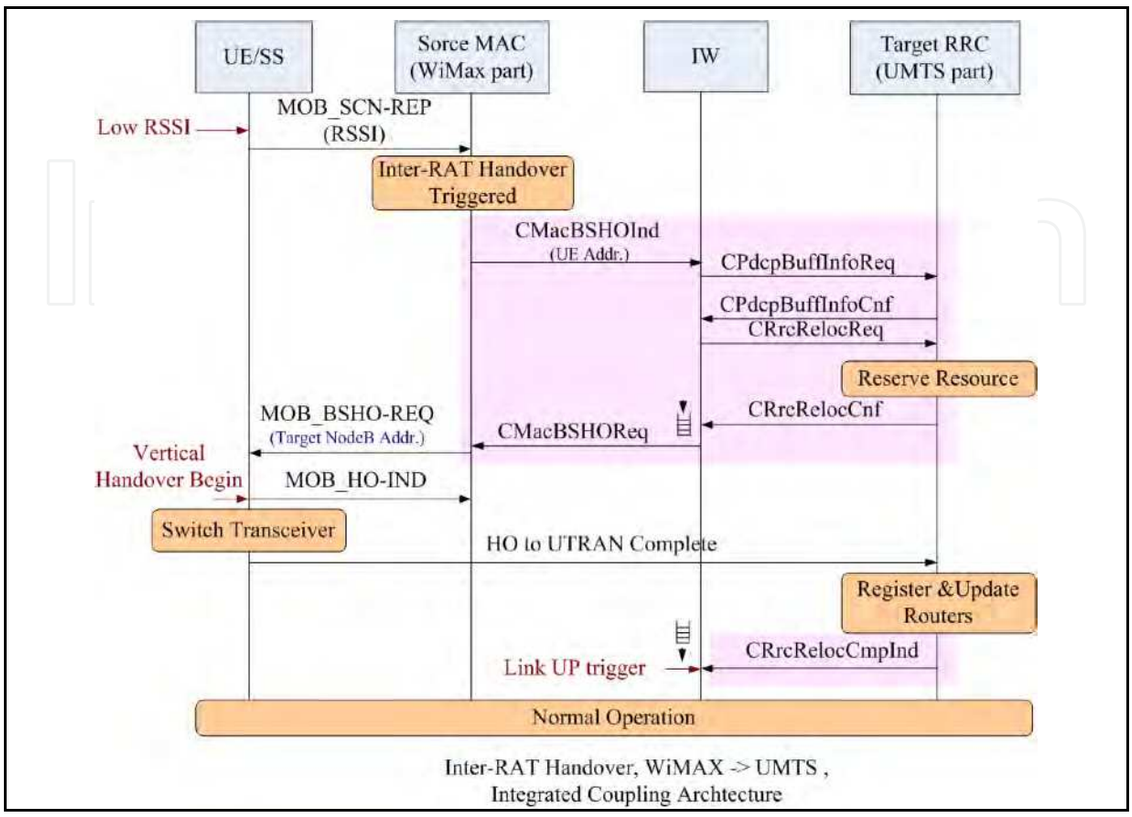

Fig. 5. Handover signalling procedure from WiMAX to UMTS

The inter-RAT handover from WiMAX to UMTS is described in Fig. 5.

1) After the scanning interval, the MS sends scanning report to WiMAX serving BS by message MON_SCN-REP that contains physical information such as mean RSSI.
2) The source WiMAX MAC sends CMacBSHOInd primitive to inform the IW sublayer of target cell id. The IW then sends CPdcpBuffInfoReq primitive to the target RRC of the UMTS network. The RRC shall return the CPdcpBuffInfoCnf primitive to inform the IW sublayer of buffer size and buffer occupation. According to this information, the IW adjusts its retransmission window size.
3) The IW sublayer sends a CRrcRelocReq primitive to the target RRC to apply for resource allocation. The result is returned in CRrcRelocCnf primitive by the target RRC.
4) Upon receipt of the CRrcRelocCnf, the IW suspends and buffers data packets that require delivery order.
5) IW sends CMacBSHOReq primitive to inform source MAC that the target network is ready.
6) The MS performs handover to one of BSs specified in MOB_BSHO-REQ and responds with a MOB_HO-IND message.
7) MS performs normal UMTS hard handover.
8) After the MS successfully finishes UMTS radio link setup, the target RRC shall send the CRrcRelocCmpInd primitive to the IW, and the IW restarts data packet forwarding.

Note that primitive CMacBSHOCmpInd and primitive CRrcRelocCmpInd are defined as the Link_Up (LU) triggers for handover from UMTS to WiMAX and for handover from WiMAX to UMTS respectively.

3.2.2.4 IW ARQ Mechanism

For the sake of achieving lossless inter-RAT handover, a modified Selective Repeat ARQ (SR ARQ) mechanism is applied to the IW sublayer during the handover period, which is renamed IW ARQ. The IW ARQ is an error control mechanism that involves error detection and retransmission of lost or corrupted packets. When a packet is accepted from upper layer, it is segmented into smaller IW blocks, each of which is assigned a sequence number (see Fig. 6). This new IW sub-header is used for block loss detection and block re-sequencing in the receiver to guarantee in-sequence delivery. Afterward, each IW block is transmitted through the UMTS or the WiMAX interface. These IW blocks are also queued in the retransmission buffer in order to be scheduled for retransmission. The IW ARQ transmitter maintains an adaptive window size that is set to target network buffer size. When an IW block is received by the receiver, a positive or negative acknowledgement (ACK/NACK) is sent back immediately for the purpose of reducing handover latency. In addition, in order to avoid dead lock due to IW ACK/NACK losses during a handover period, a status report timer is set when the receiver sends an ACK/NACK. When this timer expires, the receiver sends back a status report (ARQ feedback bitmap) providing the receipt status. This status report is map of the acknowledgement (ACK) or negative acknowledge (NACK) of each IW block within the window. Compared with conventional SR ARQ mechanism of RLC, the IW ARQ has the following features:

- **Receiver-Driven scheme:** the received status and ACK/NACK are sent back on receipt of an IW block initiatively without transmitter's polling message.
- **Support Link_Up (LU) trigger:** when a handover is finished, the target network will signal the IW sublayer with a Link_UP trigger. On receipt of this trigger, the IW sublayer will retransmit blocks in retransmission buffer to avoid unnecessary waiting for an expiration of the status report timer.
- **Adaptive Window Size:** In order to avoid any buffer overflow in the target network when the packets are retransmitted by the IW sublayer after a handover, the IW ARQ window size is adaptively set to buffer size of the target network.

In Fig. 6, an example of the IW ARQ mechanism when the window size is 12 is depicted. The right parts are two retransmission mechanisms: IW ARQ and R-LLC. In this figure, the difference between them is in that the lost blocks are retransmitted when status report timer expires in R-LLC scheme, while IW ARQ retransmits unacknowledged blocks not only on the expiration of this timer but also on the Link_Up trigger.

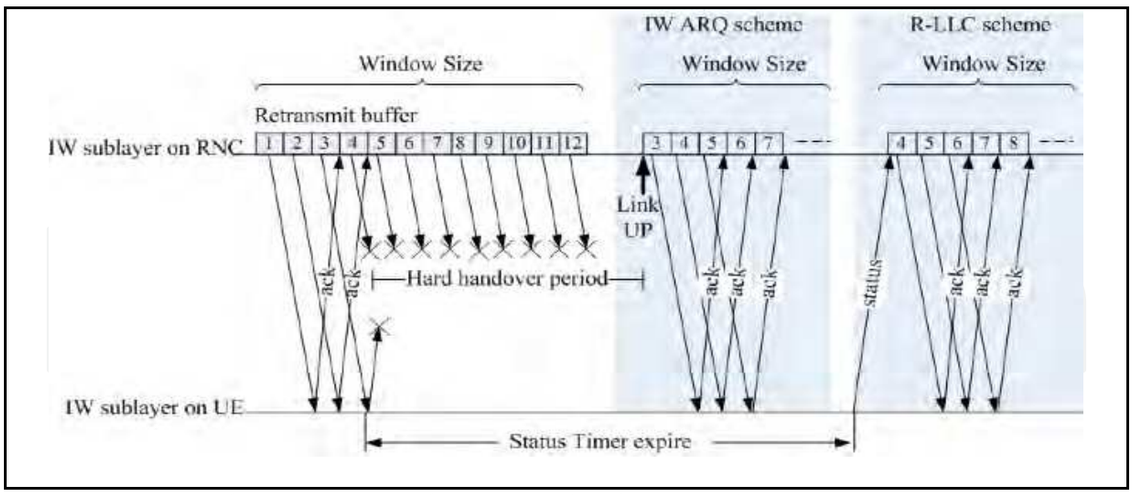

Fig. 6. IW ARQ and R-LLC protocol: an example of time evolution

3.3 Simulation Environment

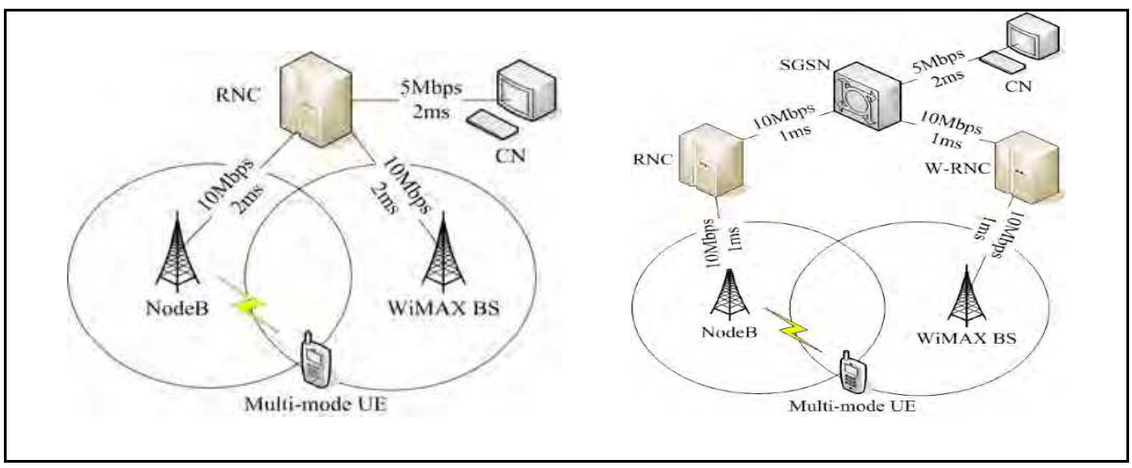

Fig. 7. Simulation topologies: integrated coupling (left) and tight coupling (right)

In order to analyze the performance of the IW sublayer during inter-RAT handover between UMTS and WiMAX, network-level simulations are carried out using NS2. Several extensions are made to this simulator, UMTS and WiMAX models, IW sublayer, multi-channel model, IW ARQ mechanism and new signaling and primitives. The simulation topologies for integrated and tight coupling scenarios are illustrated in Fig. 7. There is only one MS with two transceivers and no other background traffics in this "clean" scenario. The MS always has enough bandwidth to send packet whether it is in WiMAX region or in UMTS region. Note that in this topology, the transmission delay in the wired network is set very small deliberately to minimize its influence to handover procedure. An FTP session is examined, with the CN designated as the sender and the MS designated as the receiver. In UMTS module, a drop-tail policy is applied to radio network queues in PDCP and this queue length is set to 25 IW blocks. As to the WiMAX module, the queue length is set to 50 IW blocks, which considers the fact that generally the bandwidth of WiMAX is much higher. Other important simulation parameters are summarized in Table 1.

	Parameter	Value		Parameter	Value
IW	Fragment Switch	OFF	UMTS PHY	TTI (ms)	10
	Max retransmit count	10		Frame Duration(ms)	10
				BLER	1e-6
	Default Windows size (block)	30	WiMAX MAC	Allocated data rate	unlimited
				Queue length	50
	Status Report Timer (s)	2.5		Payload Header Suppression	no
PDCP	TCP/IP Header compression,and Retransmission	no		Frame duration (ms)	4
	Allocated data rate	64kb/s	WiMAX PHY	Modulation	OFDM
	Queue length	25		Interleaving interval (frames)	50
RLC	RLC Mode	AM			
	Windows size (Blocks)	500		FFT	256
	Block size (Bytes)	20		Number of subcarrier used	200
	maxDAT	20	TCP/IP	Variant	Reno
	Ack timerout period (ms)	50		MSS (bytes)	512
				Default cwnd	32

Table 1. Simulation Parameters

3.4 Simulation Results in the Integrated Coupling Scenario

3.4.1 Handover form UMTS to WiMAX

For the simulation of inter-RAT handover from UMTS network to the WiMAX, an FTP session starts at 0.4 sec., and the MS starts to perform handover at about 4 sec. after it enters into the coverage region of WiMAX. The handover type is hard handover. At about 4.035 sec. the WiMAX network entry procedure is finished and the IW sublayer on the RNC receives a Link_Up trigger. Fig. 8 shows the packet flows of three kinds of context transfer schemes: R-LLC, SDU Reconstruction and IW ARQ.

The R-LLC scheme does not support Link_Up trigger, so it retransmits the last unacknowledged data packets on the expiration of status report timer. During this period, the TCP timer expires and the congestion window shrinks to one, as shown in Fig. 9. There is a retransmitted TCP segment at about 5.7 sec.

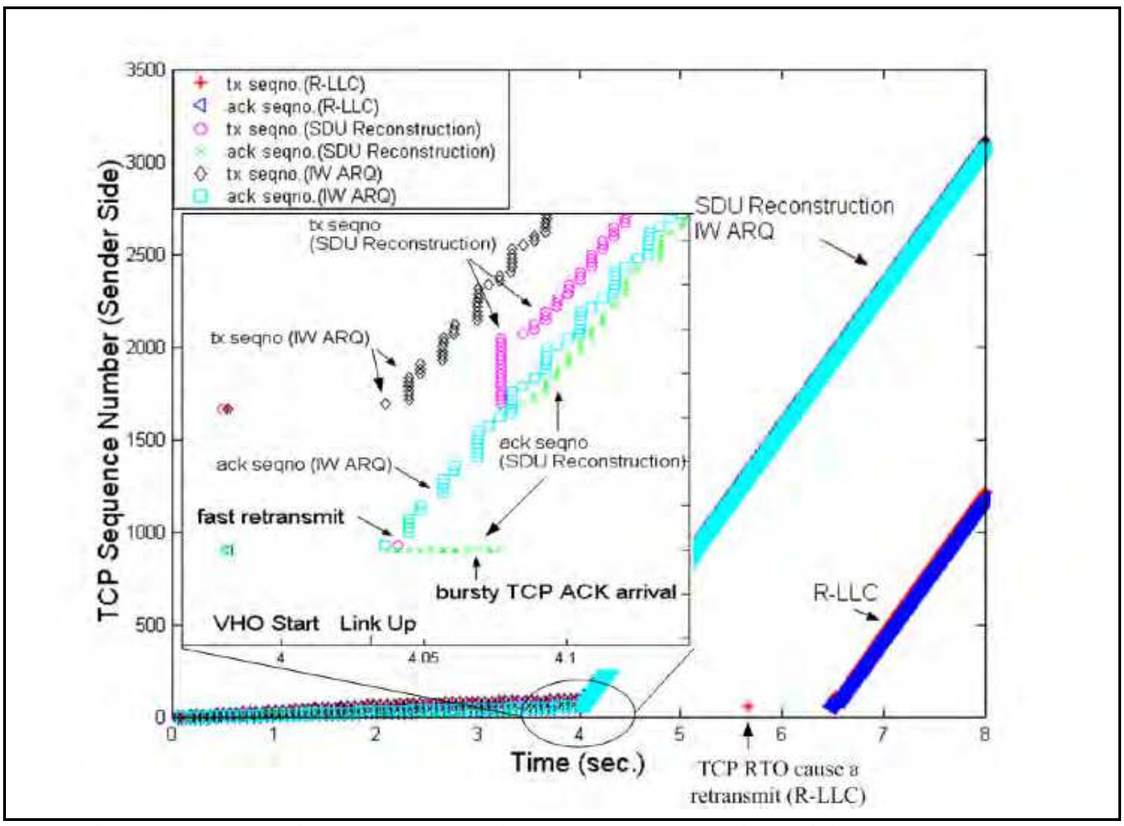

Fig. 8. TCP segment number comparison (umts->wimax, sender side)

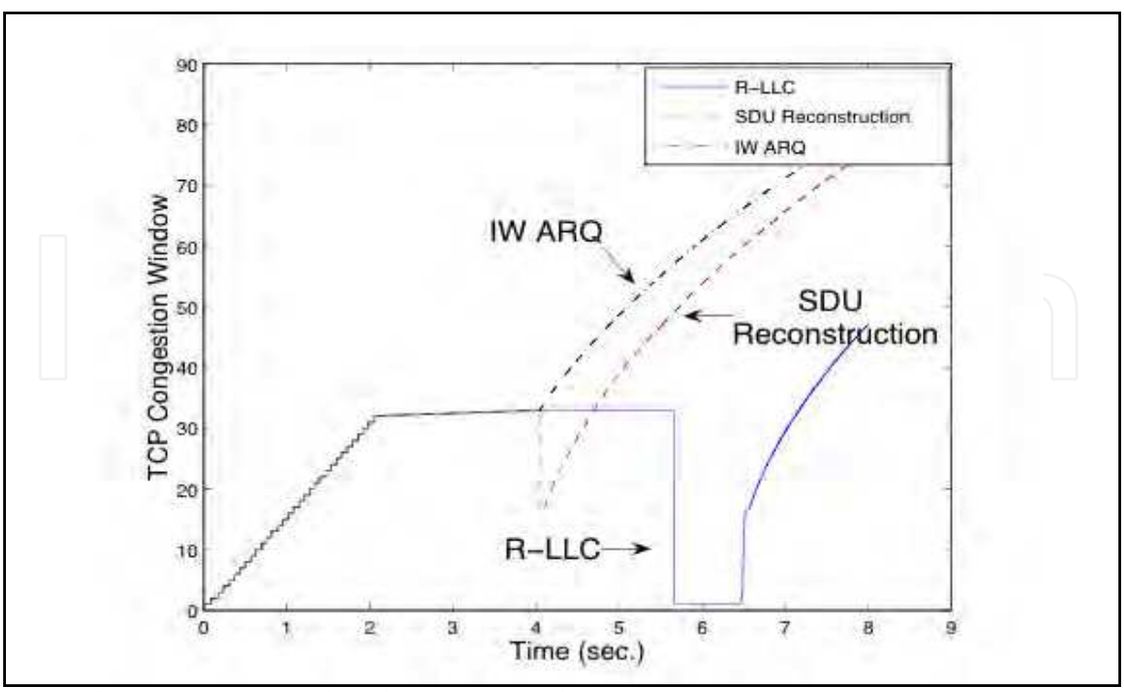

Fig. 9. TCP congestion window (umts->wimax)

The SDU Reconstruction scheme reconstructs the RLC PDUs stored in the RLC retransmission buffer. However, if one PDU of a SDU is successfully transmitted, this PDU is deleted from retransmission buffer and the remaining PDUs of this SDU cannot be reconstructed and are discarded locally. The remaining RLC SDUs (TCP packets here) are forwarded to WiMAX network after handover on RNC. These arrivals of out-of-order packets generate several duplicate ACK and trigger TCP fast retransmission process. The TCP congestion window size shrinks to half of congestion window of steady state, and the average throughput is also reduced.
The IW ARQ scheme adjusts its retransmission window according to the target network's queue size and forwards the IW blocks in its retransmission buffer on receipt of Link_Up trigger. After handover is over, there are no packet losses and the TCP ACK arrivals are not as bursty as those of SDU Reconstruction scheme thanks to the IW ARQ window mechanism (see Fig. 8 between 4 and 4.1 sec.).

3.4.2 Handover from WiMAX to UMTS

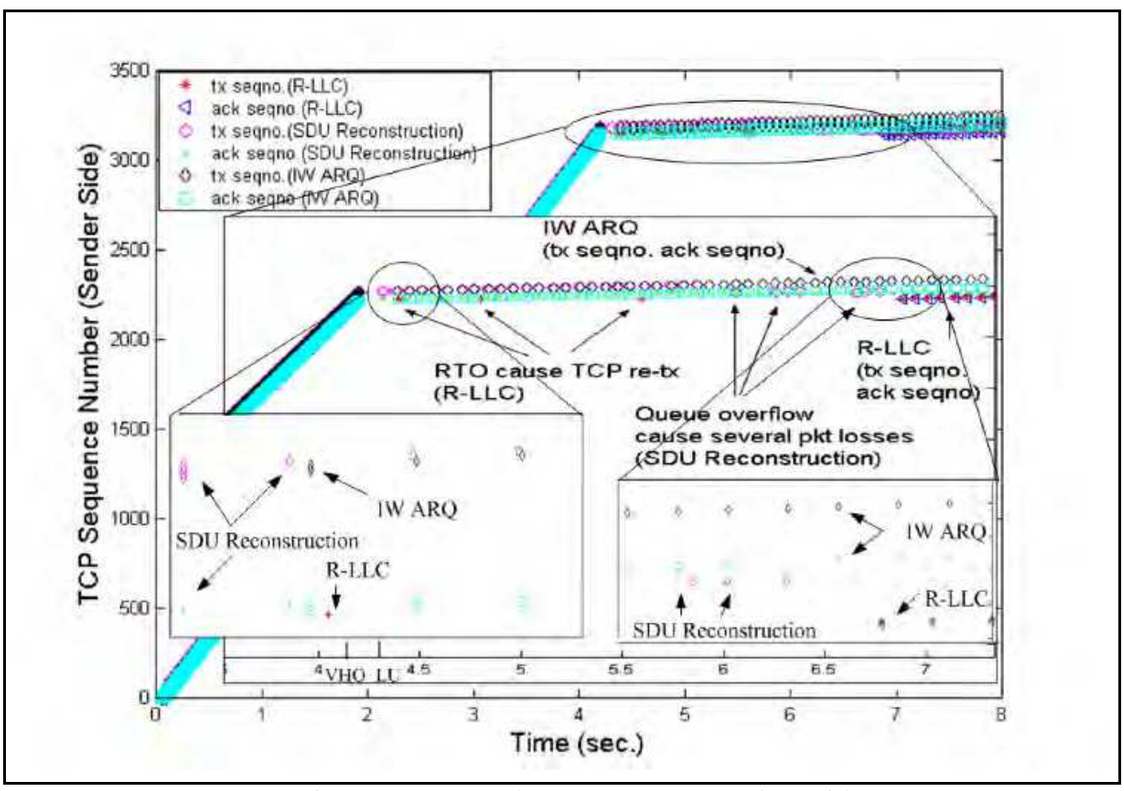

Fig. 10. TCP segment number comparison (wimax->umts, sender side)

A typical problem during handover process from high bandwidth data network WiMAX to relative low bandwidth network UMTS is buffer overflow, which is caused by BDP mismatch between these two networks. The UMTS network is likely to undergo buffer overflow when a TCP congestion window for WiMAX is much larger than the buffer allocation per MS in UMTS RNC.

For SDU Reconstruction scheme, even though TCP congestion window is not larger than buffer size of UMTS, the buffered packet forwarded from WiMAX to UMTS still may have the probability to overflow the UMTS queue, because queue in WiMAX may buffer more packets than the queue size of UMTS due to inflated transmission time. For SDU Reconstruction scheme, in Fig.10, the buffer overflow in UMTS after handover leads to TCP retransmission starting at about 6.0 sec. The corresponding TCP window shrinks, as shown in Fig. 11.

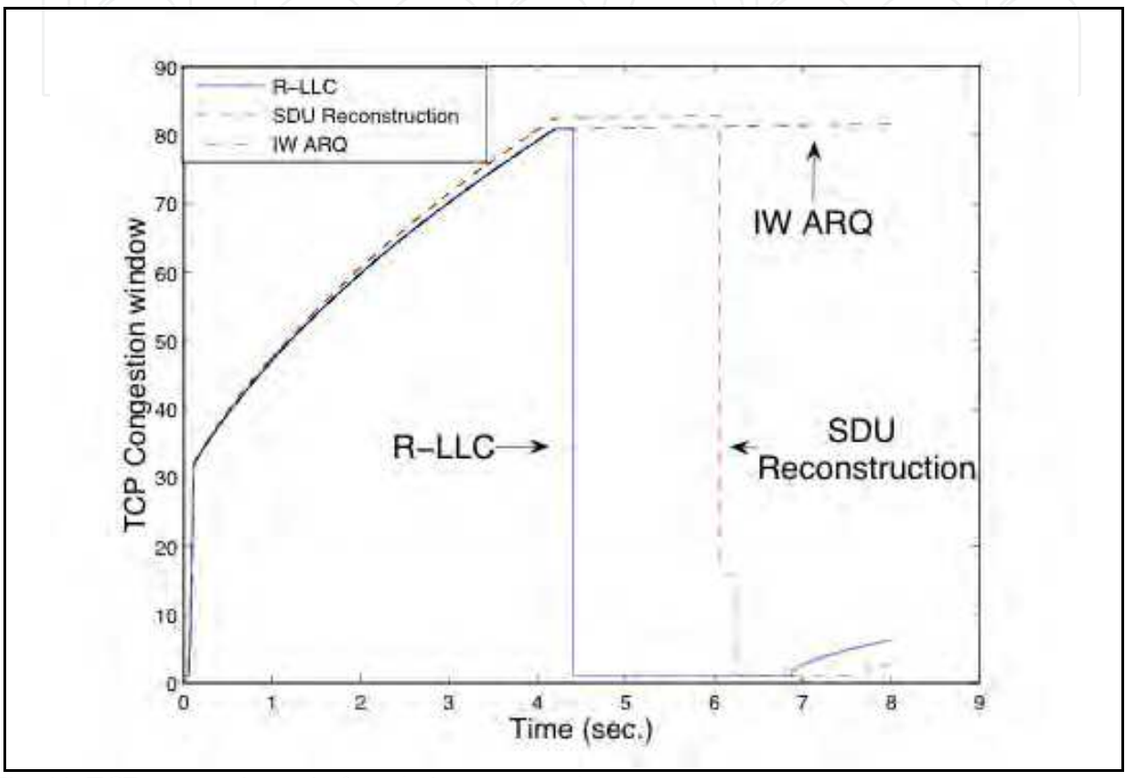

Fig. 11. TCP congestion window (wimax->umts)

For R-LLC scheme, the long status report period leads to TCP RTO and a segment is retransmitted by the TCP sender three times before a status report timer expires. The period of status report timer is set to 2.5 sec. in this scenario.

Whereas for IW ARQ scheme, the support of Link_Up trigger accelerates handover response time, and the adaptive IW ARQ window size effectively eliminates buffer overflow in the target UMTS network. It can be seen that the lossless handover of IW ARQ mechanism has a "side effect": eliminate the false fast retransmission caused by packet losses or out-of-order packet arrivals during a handover.

4. Inter-RAT Handover between UMTS and WiMAX in Tight Coupling Architecture

4.1 The IW Sublayer in the Tight Coupling Architecture

4.1.1 IW Sublayer Description

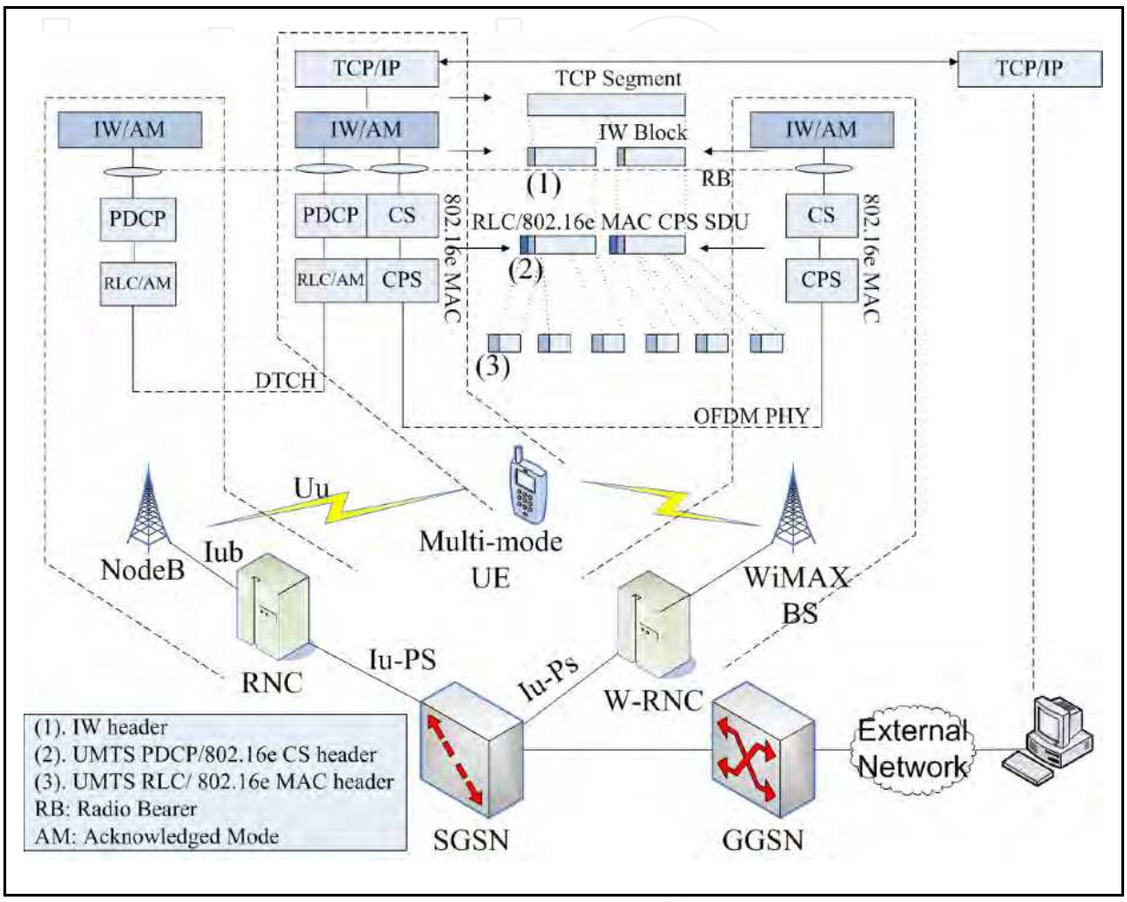

Fig. 12. IW sublayer working mechanism of tight coupling

In the tight coupling scenario, the WiMAX network may emulate a RNC (Radio Network Controller) or a SGSN (Serving GPRS Support Node). We only consider RNC emulation in this chapter. Thus, we introduce a new network component called RNC emulator for WiMAX (W-RNC) in the WiMAX access network, which connects with the UMTS CN (Core Network) at the Iu-PS interface, as shown in Fig. 12. Actually, the W-RNC is an enhanced WiMAX BS with a novel sublayer named IW sublayer, which lies on the top of WiMAX MAC (Medium Access Control) sublayer. The W-RNC with the IW sublayer has the following functions:

- Realize Iu-PS interface.
- Primitive mapping between the IW and the UTRAN network or between the IW and the WiMAX network in case of an inter-RAT handover.

- When an inter-RAT handover takes place, the IW sublayer functions as the LLC sublayer of conventional cellular networks by enabling the SR ARQ (Selective Repeat ARQ) mechanism that includes packet segmentation, re-sequencing, retransmission, and retransmission window size adjustment.
- When a handover takes place, the IW sublayer transfers context to target RNC or W-RNC where the counterpart sublayer locates. In order to provide a seamless inter-RAT handover between UMTS and WiMAX, a peer IW sublayer shall also be realized on the top of the PDCP sublayer on the conventional RNC. While on the MS, the IW sublayer is a common sublayer on the top of the PDCP sublayer of UMTS and the MAC sublayer of WiMAX.

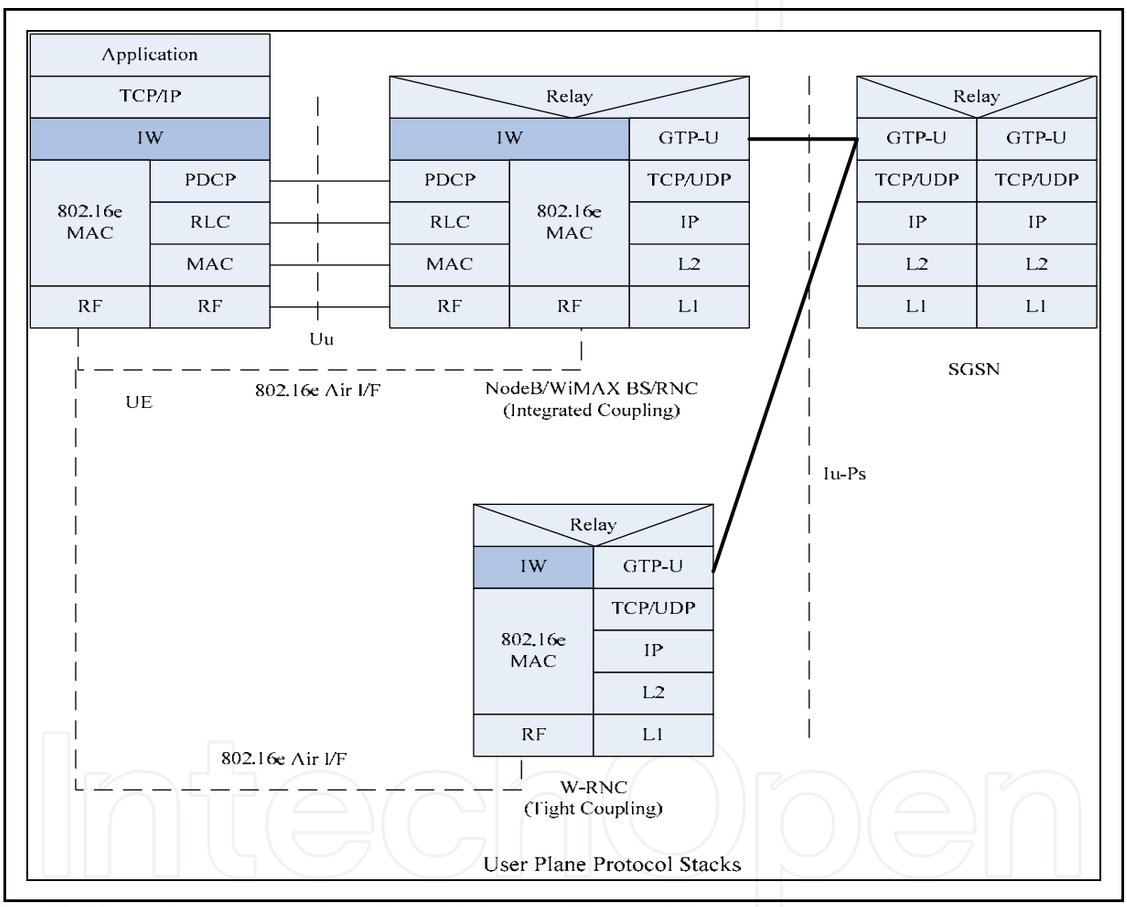

Fig. 13. User plane protocol stacks of tight coupling architecture

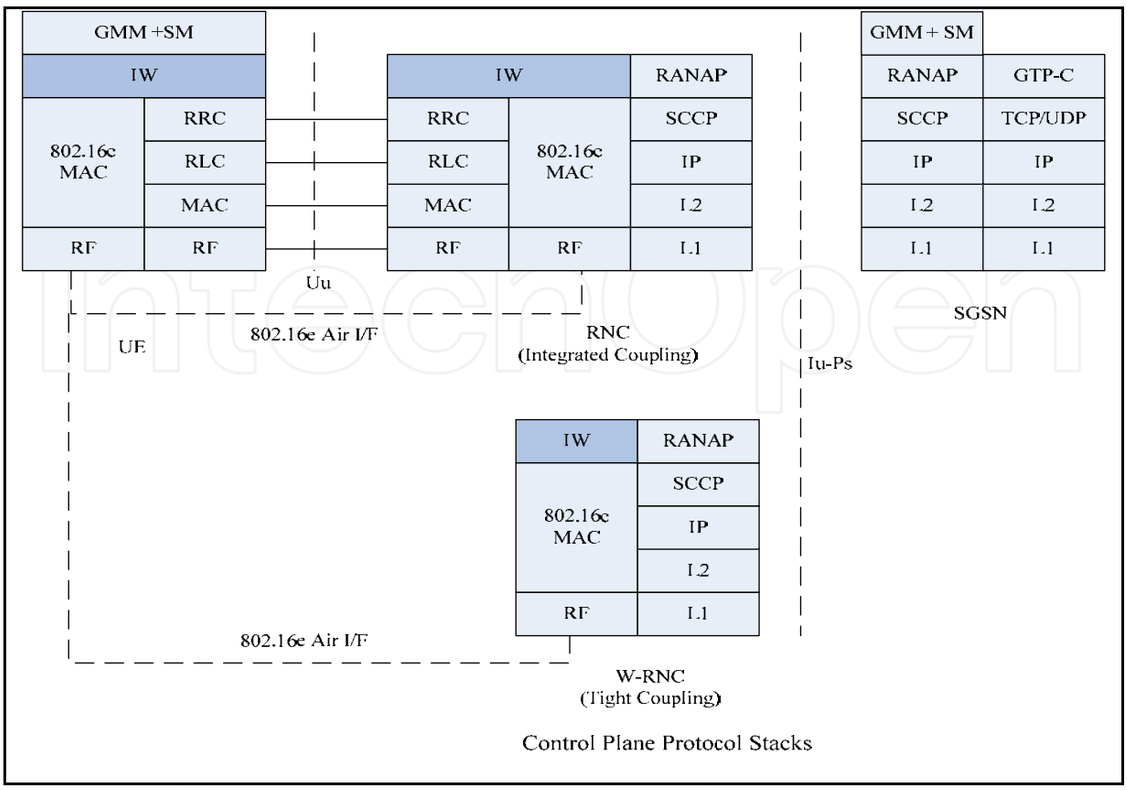

Fig. 14. Control plane protocol stacks of tight coupling architecture

In Fig. 13 and Fig. 14, the user and control planes of the proposed tight coupling architecture are illustrated. W-RNC is assumed to cover the same Routing Area (RA) like the RNC. The IW sublayer on the W-RNC communicates with its counterpart entity on the RNC in order to execute inter-RAT handover to/from its control area. The main contents of the communication between them are as follows:

- GTP-U sequence numbers as well as GTP packets that need to be forwarded by the W-RNC for PDP contexts requiring delivery order.
- IW ARQ parameters, such as windows size, queue length, retransmission timer period, and retransmission count.
- The IW blocks stored in local retransmission buffer.

There are two reasons why add IW ARQ mechanism to W-RNC in addition to SRNS (Serving RNS) context transfer of conventional RNC:

- When an inter-RAT handover takes place, there may exist packet sequence number asynchronization between the source RNC and the target WiMAX BS. It is necessarily that there exists a common context transfer mechanism for these two systems to assure a lossless handover.
- The second reason is that the WiMAX supports cell reselection initiated by MS for active traffics (like dedicated mode in UMTS), which is not the case in UMTS. Hence, the packets that are lost during the cell reselection from WiMAX to UMTS, cannot be retransmitted by the target network.

4.1.2 Signaling and Primitives

4.1.2.1 Handover from UMTS to WiMAX

This sub-clause describes the inter-RAT handover signaling procedures and primitives among IW, PDCP, RRC (Radio Resource Control) and WiMAX MAC in the tight coupling architecture. In the following figures, IW/RNC means the function combination of IW sublayer and RNC, so are the IW/W-RNC and MAC/W-RNC. Some newly added cross-layer primitives are augmented to the conventional inter-RAT handover signaling procedures of 3GPP (3GPP TS 43.129; 3GPP TR 25.931). We suggest the future WiMAX and UMTS standards should support these primitives and parameters for the smooth and seamless inter-RAT handover. The handover preparation period is similar to that of integrated coupling architecture and is omitted in this sub-clause.

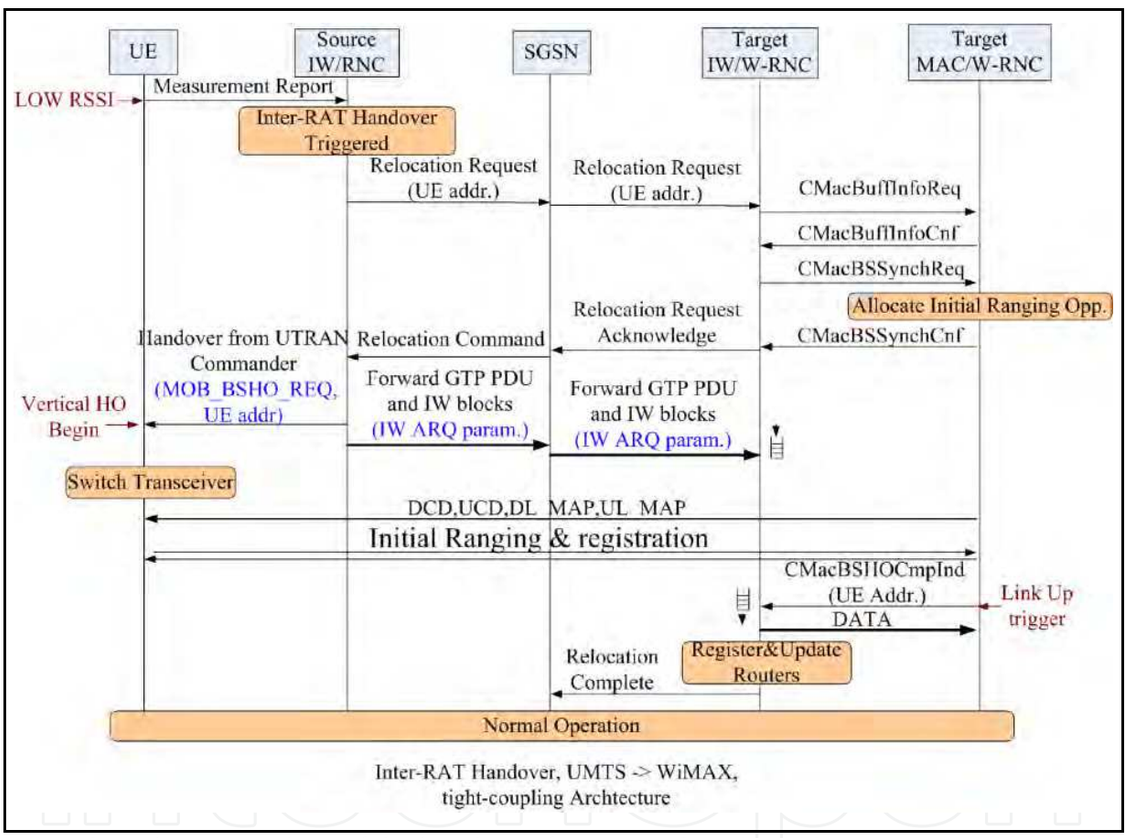

Fig. 15. Signaling procedure of the handover from UMTS to WiMAX

Fig. 15 describes the inter-RAT handover from UMTS to WiMAX and shows the exchanged messages.

1) Based on measurement reports and knowledge of the RAN topology, the RNC, more precisely source RRC decides to initiate an inter-RAT PS handover.
2) The source RNC sends a Relocation Request (contains target WiMAX cell id) message to the SGSN. The SGSN forwards Relocation Request message to target W-RNC.
3) Then the IW of target W-RNC sends the CMacBuffInfoReq primitive to the WiMAX MAC to request the buffer characteristics. The WiMAX MAC returns the

CMacBuffInfoCnf primitive to inform the IW of the buffer size in its MAC sublayer. According to this information, the target IW adjusts its retransmission window size. It should be mentioned at this point that current WiMAX MAC does not support this interface, so the IW may adjust its retransmission window size to a default value.

4) At this stage, the target IW sends the CMacBSSynchReq primitive to the WiMAX MAC to negotiate the location of the dedicated initial ranging transmission opportunity for the MS. This information is returned by primitive CMacBSSynchCnf.
5) The target W-RNC sends the Relocation Request Acknowledge message to SGSN, and the SGSN continues the handover by sending a Relocation Command to source RNC (including Transparent Container (MOB_BSHO-REQ)).
6) Upon receipt of Relocation Command message, the IW of source RNC will forward IW context to target IW of W-RNC. The IW context consists of IW ARQ parameters, received IW ACK and remaining IW blocks that have not been transmitted successfully.
7) The RRC of the source RNC sends the Handover from UTRAN Command message to the MS.
8) The MS performs hard handover and normal network entry procedure.
9) After the provisioned service flow is activated, the target WiMAX MAC sends CMacBSHOCmpInd primitive as a Link_UP (LU) trigger to the IW sublayer. On this trigger, the IW starts data packet forwarding.

4.1.2.2 Handover from WiMAX to UMTS

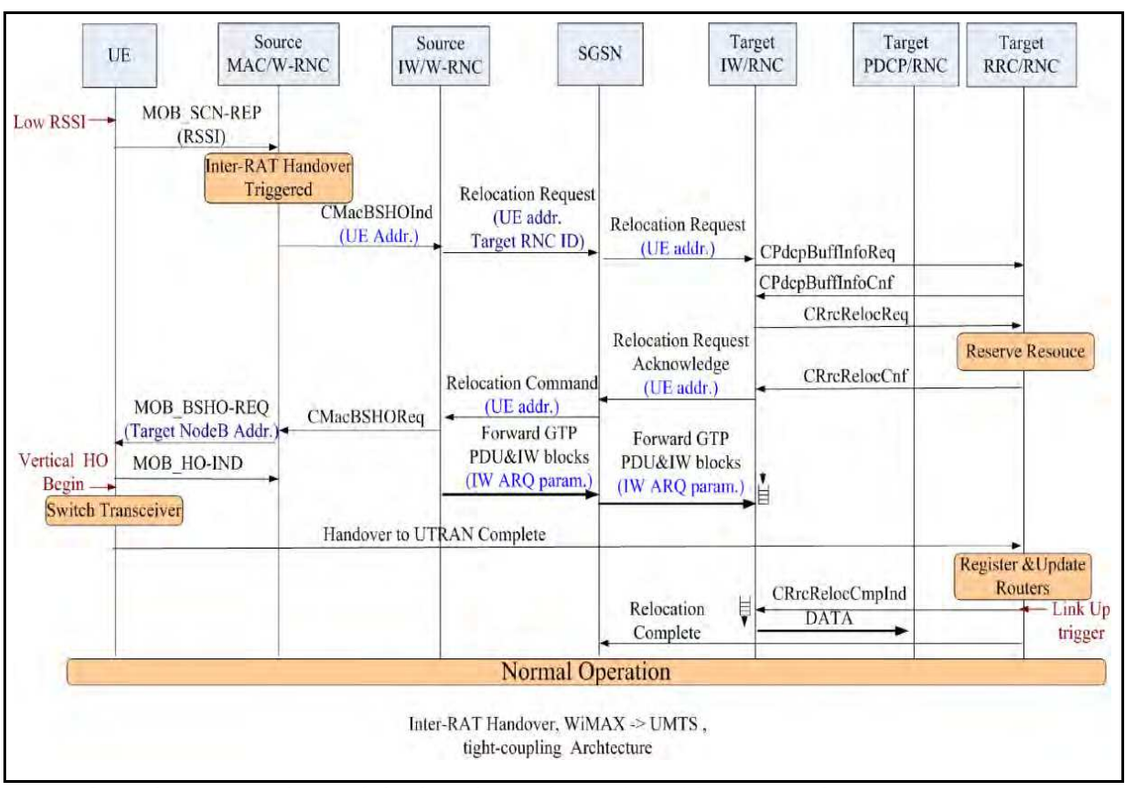

Fig. 16. Signaling procedure of the handover from WiMAX to UMTS

The inter-RAT handover from WiMAX to UMTS is described in Fig. 16.

1) After the scanning interval, the MS sends scanning report to WiMAX serving BS by message MON_SCN-REP that contains physical information such as mean RSSI.

2) The source WiMAX MAC sends CMacBSHOInd primitive to inform the IW sublayer of handover and target cell id. Then, the source W-RNC sends a Relocation Request (contains target cell id) message to the SGSN. The SGSN forwards Relocation Request message to target RNC.

3) The IW of target RNC sends CPdcpBuffInfoReq primitive to the RRC sublayer to request the buffer characteristics of the PDCP sublayer, and RRC returns the CPdcpBuffInfoCnf primitive to inform the IW of buffer size. According to this information, the IW adjusts its retransmission window size.

4) The target IW sends a CRrcRelocReq primitive to the target RRC to apply for resource allocation. The result is returned in CRrcRelocCnf primitive by the target RRC.

5) The target RNC sends the Relocation Request Acknowledge message (contains target RNC to source W-RNC transparent Container) to SGSN. The SGSN continues the handover by sending a Relocation Command to source W-RNC.

6) On receipt of Relocation Command message, the IW of source W-RNC will forward IW context to the IW of target RNC. The IW context consists of IW ARQ parameters, received IW ACK, and remaining IW blocks that have not been transmitted successfully.

7) The source IW sends CMacBSHOReq primitive to inform MAC that the target network is ready.

8) The MS performs handover to one of BSs specified in MOB_BSHO-REQ and responds with a MOB_HO-IND message.

9) MS performs normal UMTS hard handover.

10) After the MS successfully finishes UMTS radio link setup, the target RRC shall send the CRrcRelocCmpInd primitive to the IW, and the IW starts data packet forwarding.

Note that primitive CMacBSHOCmpInd and primitive CRrcRelocCmpInd are defined as the Link_Up (LU) triggers for handover from UMTS to WiMAX, and for handover from WiMAX to UMTS respectively.

4.1.3 Buffering-and-Forwarding (B&F) in Tight Coupling Architecture

We have mentioned that: in FMIPv6 protocol (R. Koodli, 2005), in order to make a handover lossless, previous access router (PAR) will forward buffered packets destined for the MS during the handover period to the new access router (NAR) through an established tunnel, after receiving the new care-of-address (NCoA) of the MS from the NAR. One essence of this IP layer handover solution is the utilization of buffering-and-forwarding (B&F) context transfer scheme. In our IW sublayer solution, the B&F scheme is also applied to forward GTP-U packets, IW blocks and so on from source IW sublayer to target IW sublayer. It becomes meaningful and interesting to compare IW sublayer handover solution with FMIPv6 in tight coupling architecture. For fairly comparing the inter-RAT handover performance of IW sublayer solution with that of FMIPv6, we also only realize the B&F scheme in the IW sublayer in our inter-RAT handover scenario, where the RNC or W-RNC takes the responsibility of buffering and forwarding. This kind of Layer 2 realization considers the fact that: the conventional IP sublayer terminates on the GGSN in the UMTS network, which suffers from longer transmission delay between the MS and the GGSN at IP

layer. It must be stressed that this Layer 2 realization of B&F has better performance than IP layer realization like FMIPv6 thanks to the ability to directly operate Layer 2 data packets stored in one RAT. In the simulation sub-clause, we will inspect these two kinds of context transfer schemes- IW ARQ and B&F in the tight coupling architecture. If the handover performance of IW ARQ is better than that of B&F at Layer 2, we can say that the IW sublayer solution is more suitable for inter-RAT handover than FMIPv6.

4.2 Simulation Results in the Tight Coupling Scenario

4.2.1 Handover from UMTS to WiMAX

For the simulation of inter-RAT handover from UMTS network to the WiMAX, an FTP session starts at 0.4 sec., and the MS starts to perform handover at about 4 sec. after it enters into the coverage region of WiMAX. The handover type is hard handover. At about 4.035 sec, the WiMAX network entry procedure is finished and the IW sublayer on the RNC receives a Link_Up trigger. Fig. 17 shows the packet flows of two kinds of context transfer schemes: buffering-and-forwarding (B&F) and IW ARQ.

During the handover period, there are no new TCP segment arrivals and consequently no segments are forwarded through the tunnel between RNC and W-RNC for both context transfer schemes (see Fig.18). One can see from Fig. 18 that, in B&F scheme, the TCP sender retransmits the last unacknowledged segments on the timeout of TCP retransmission timer (RTO) at about 5.7 sec. During this period, the congestion window shrinks to one, and throughput reduces significantly.

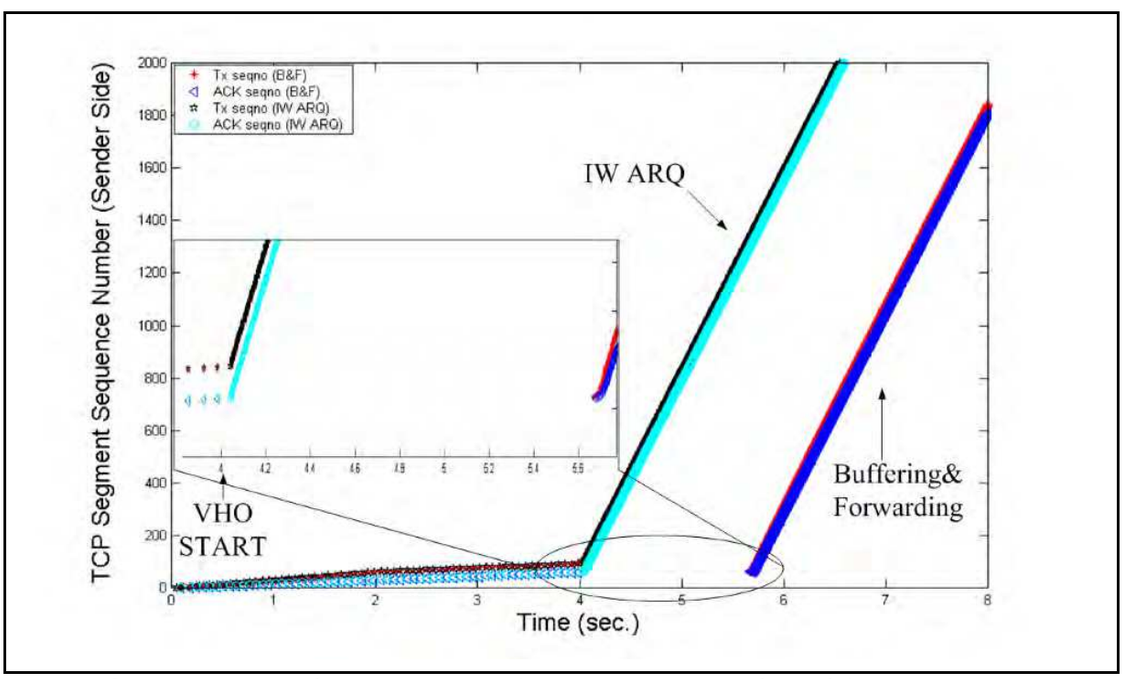

Fig. 17. TCP segment number comparison (umts->wimax, sender side)

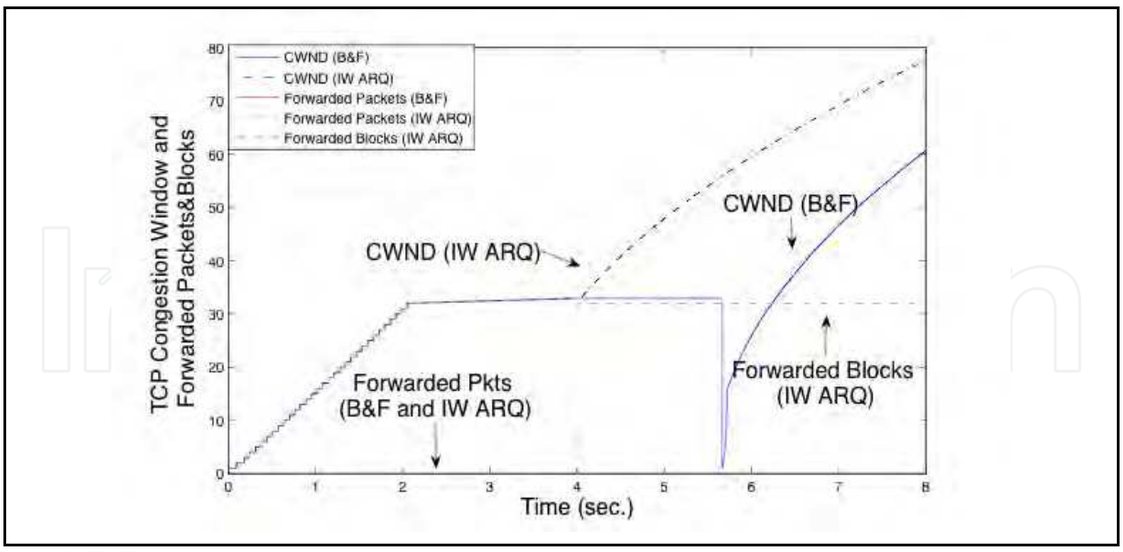

Fig. 18. TCP congestion window (umts->wimax)

The IW ARQ scheme adjusts its retransmission window according to the target network's queue size, and sends the IW blocks that are forwarded from the source IW on receipt of Link_Up trigger. After the handover, there will be no packet losses and TCP congestion window does not shrink thanks to the retransmission mechanism.

4.2.2 Handover from WiMAX to UMTS

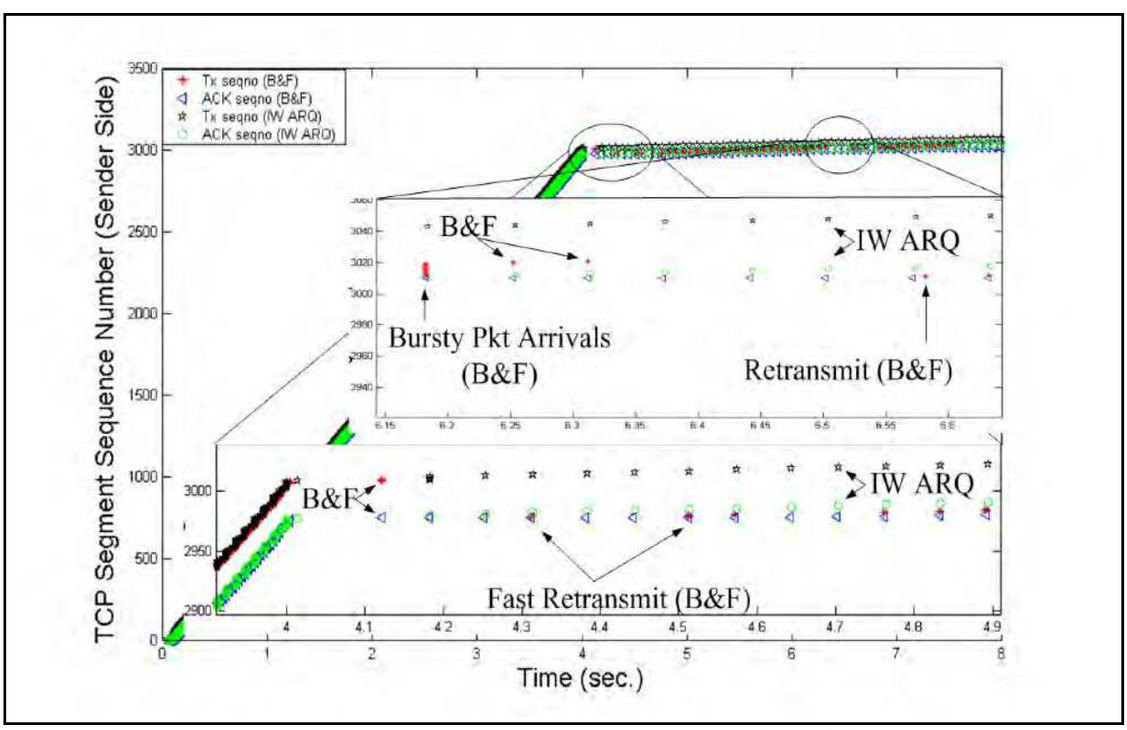

Fig. 19. TCP segment number comparison (wimax->umts, sender side)

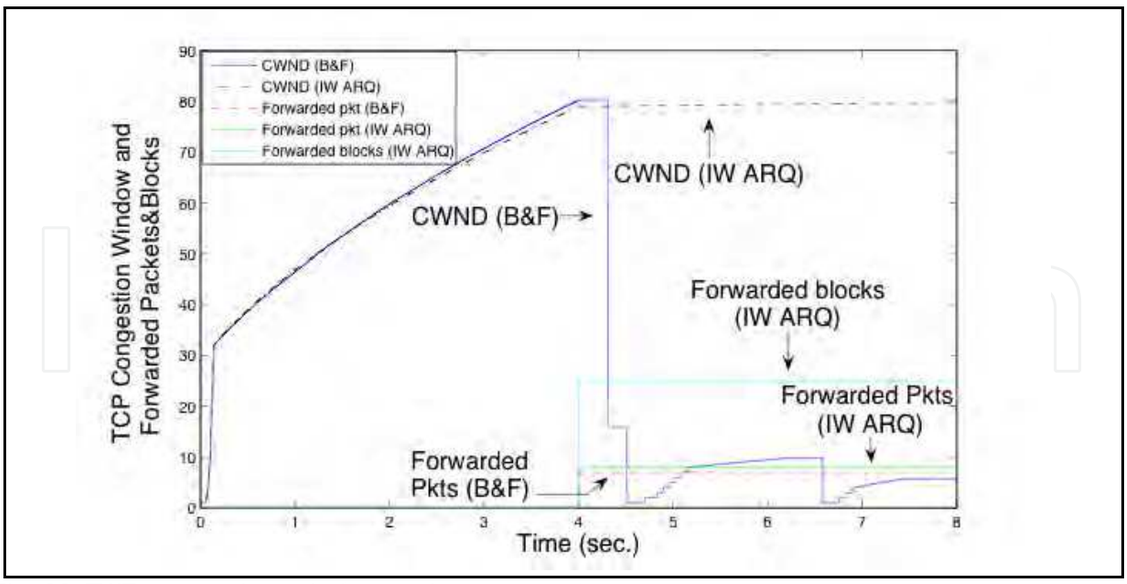

Fig. 20. TCP congestion window (wimax->umts)

When a handover from WiMAX to UMTS happens, there exist some TCP segments and IW blocks, which are forwarded from W-RNC to RNC through the tunnel for two schemes, as shown in Fig.20. For B&F scheme, the arrivals of tunneled segments (about 8 segments) trigger the fast retransmissions twice at time 4.31 sec. and 4.51 sec. for the lost segments during the handover (see Fig. 19), and then congestion window size reduces significantly. From then on, the TCP sender retransmits the segments numbering from the first lost segment to the tunneled segments. The receiver will acknowledge again those segments that have been tunneled before at about 6.18 sec, which herein trigger the bursty segment arrivals. Furthermore, those retransmitted segments that have been tunneled during handover procedure delay the ACK feedback of new segments, and in consequence lead to a retransmission caused by RTO at 6.58 sec.. We can see that, the B&F scheme degrades the handover performance instead of improving it for TCP traffics due to the lack of a mechanism that recovers the lost packets.

For IW ARQ scheme, there is no packet loss during the handover. The support of Link_Up trigger accelerates handover response time, and the adaptive IW ARQ window size effectively eliminates buffer overflow in the target UMTS network. The only price for this lossless handover procedure is that the IW sender may retransmit a couple of IW blocks that possibly have been received by IW receiver but the corresponding ACKs are lost in the air during the handover period.

5. Conclusion

This chapter focuses on introduction of proposed inter-RAT handover solution for interworking UMTS with WiMAX. First, the 3GPP cell reselection and handover mechanism are outlined in the first section. This section gives us main guideline for designing a new mechanism to deal with typical problems of inter-RAT handover between UMTS and WiMAX. Then, a novel Layer 2 inter-RAT handover scheme on basis of the integrated coupling and tight coupling architectures for the seamless roaming between UMTS and

WiMAX networks are elaborated. For instance, in integrated coupling architecture, a new common sublayer named IW sublayer that lies on the RNC and MS is added on the top of PDCP (UMTS) and MAC (WiMAX) sublayer. At this novel sublayer, a new retransmission scheme called IW ARQ is also proposed to eliminate packet losses during handover procedure and accelerate handover procedure. Compared with other context transfer mechanisms, such as R-LLC, SDU Reconstruction and buffering-and-forwarding, IW ARQ can achieve lossless and prompt handover procedure for TCP traffics thanks to the introduction of SR ARQ mechanism. The better handover performance is validated by the simulation results carried out on NS2 emulator. In addition, this novel IW sublayer scheme also can eliminate the false fast retransmission due to packet loss or out-of-order packet arrivals during a handover period. It also provides a suitable framework to solve the TCP problem of BDP mismatch, premature RTO and so on.

6. References

3GPP TS 04.18. Technical Specification Group GSM/EDGE Radio Access Network; mobile radio interface layer 3 specification; radio resource control protocol

3GPP TS 05.08. Technical Specification Group GSM/EDGE Radio Access Network; Radio subsystem link control (release 99)

3GPP TS 23.060. Technical Specification Group Services and System Aspects; General Packet Radio Service (GPRS); Service description, stage 2 (Release 7), v7.4.0

3GPP TS 23.122, "Technical Specification Group Core Network and Terminals; Non-Access-Stratum (NAS) functions related to Mobile Station (MS) in idle mode", (Release 7), V7.2.0

3GPP TS 23.234. 3GPP system to Wireless Local Area Network (WLAN), interworking; System description (Release 6), V6.5.0

3GPP TS 25.304. User Equipment (UE) procedures in Idle Mode and Procedures for Cell Reselection in Connected Mode

3GPP TS 25.323. Technical Specification Group Radio Access Network; Packet Data Convergence Protocol (PDCP) specification, (Release 7), V7.5.0

3GPP TS 25.331. Technical Specification Group Radio Access Network; Radio Resource Control (RRC); Protocol Specification (Release 7), v7.5

3GPP TR 25.922. Technical Specification Group Radio Access Network; Radio resource management strategies (Release 7), V7.10

3GPP TR 25.931. Technical Specification Group RAN; UTRAN functions, examples on signaling procedures, (Realease 7), V7.4.0

3GPP TS 43.022, "Technical Specification Group GSM/EDGE; Radio Access Network; Functions related to Mobile Station (MS) in idle mode and group receive mode", (Release 7), V7.2.0

3GPP TS 43.129. Technical Specification Group GSM/EDGE" Radio Access Network; Packet-switched handover for GERAN A/Gb mode; Stage 2 (Release 7), V7.2.0

3GPP TS 44.060. Technical Specification Group GSM/EDGE Radio Access Network; General Packet Radio Service (GPRS), Radio Link Control/Medium Access Control (RLC/MAC) protocol (Release 7), V7.9.0

3GPP TS 45.008. Technical Specification Group GSM/EDGE; Radio Access Network; Radio subsystem link control (Release 7), V7.8.0

C. Johnson, R. Cuny & N. Wimolpitayarat. (2005). Inter-System Handover for Packet Switched Services", *2005 6th IEE International Conference on 3G and Beyond,* pp: 1-5, 7-9 Nov. 2005

D. Johnson, C. Perkins, & J. Arkko. (2004). IP Mobility Support in IPv6, http://www.ietf.org/rfc/rfc3775.txt, IETF, June 2004

E. Seurre, P. Savelli & P.J. Pietri. (2003). *GPRS for Mobile Internet*, Artech House Ltd, 2003

G. Lanpropoulos, N. Passas, L. Merakos & A. Kaloxylos. (2005). Handover Management Architectures in Integrated WLAN/Cellular Networks. *IEEE Communication Survey & Tutorials.* Vol.7, No.4, pp: 30-44, Fourth Quarter 2005

H. Inaura, G. Montenegro, R. Ludwig, A. Gurtov & F. Khafizov. (2003). TCP over Second (2.5) and Third (3G) Generation Wireless Networks, IETF, RFC 3481

H. Rutagemwa, S. Park, X.M. Shen & J.W. Mark. (2007). Robust Cross-layer Design of Wireless Profiled TCP Mobile Receiver for Vertical Handover, *IEEE Tans. On Vehicular Technology,* Vol.56, No. 6, pp: 3899-3911, Nov. 2007

Http://www.isi.edu/nsnam/ns

IEEE 802.16e (2005). IEEE Standard for Local and metropolitan area networks Part 16: Air Interface for Fixed and Mobile Broadband Wireless Access Systems Amendment 2: Physical and Medium Access Control Layers for Combined Fixed and Mobile Operation in Licensed Bands, 2005

IEEE 802.21 (2006). Standard and Metropolitan Area Networks: Media Independent Handover Services, Draft P802.21/D00.05, January 2006

J.P Romero, O. Sallent, R. Agusti & A.D.G. Miguel. (2005). *Radio Resource Management Strategies in UMTS*, John Wiley & Sons, Ltd, 2005

J. Sachs, B. S. Khurana & P. Mahonen. (2006). Evaluation of Handover Performance for TCP Traffic Based on Generic Link Layer Context Transfer, *IEEE International Symposium on Personal, Indoor and Mobile Radio Communications, 2006 (PIMRC'06),* pp: 1-5, Sept. 2006

M. Afif, P. Martins, S. Tabbane & P. Godlewski. (2006). SCTP Extension for EGPRS/WLAN Handover Data, *31st IEEE Conference on Local Computer Networks*, pp: 746-750, Nov. 2006

N. Dailly, P. Martins & P. Godlewski. (2006). Performance evaluation of L2 handover Mechanisms for Inter-Radio Access Networks, *IEEE Vehicular Technology Conference, 2006 (VTC2006-Spring),* pp: 491-495, May 7-10, 2006

N. Vulic, I. Niemegeers & S.H de Groot. (2004). Architectural Options for the WLAN Integration at the UMTS Radio Access level, *IEEE Vehicular Technology Conference, 2004 (VTC 2004-Spring),* pp: 3009-3013, May 17-19, 2004

R. Koodli. (2005). Fast Handovers for Mobile IPv6, http://www.ietf.org/rfc/rfc4068.txt, IETF, July 2005

S.L. Tsao & C.C. Lin. (2002). Design and Evaluation of UMTS/WLAN interworking Strategies, *IEEE Vehicular Technology Conference, 2002 (VTC2002-Fall),* pp: 777-781, 2002

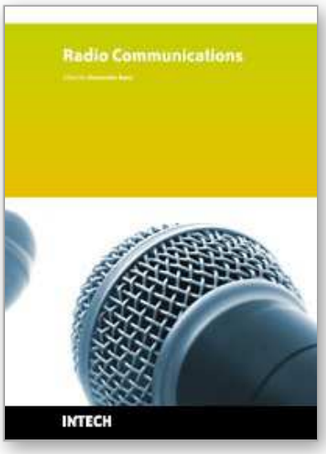

Radio Communications

Edited by Alessandro Bazzi

ISBN 978-953-307-091-9
Hard cover, 712 pages
Publisher InTech
Published online 01, April, 2010
Published in print edition April, 2010

In the last decades the restless evolution of information and communication technologies (ICT) brought to a deep transformation of our habits. The growth of the Internet and the advances in hardware and software implementations modified our way to communicate and to share information. In this book, an overview of the major issues faced today by researchers in the field of radio communications is given through 35 high quality chapters written by specialists working in universities and research centers all over the world. Various aspects will be deeply discussed: channel modeling, beamforming, multiple antennas, cooperative networks, opportunistic scheduling, advanced admission control, handover management, systems performance assessment, routing issues in mobility conditions, localization, web security. Advanced techniques for the radio resource management will be discussed both in single and multiple radio technologies; either in infrastructure, mesh or ad hoc networks.

How to reference

In order to correctly reference this scholarly work, feel free to copy and paste the following:

Bin Liu and Philippe Martins, Philippe Bertin and Abed Ellatif Samhat (2010). Inter-RAT Handover Between UMTS And WiMAX, Radio Communications, Alessandro Bazzi (Ed.), ISBN: 978-953-307-091-9, InTech, Available from: http://www.intechopen.com/books/radio-communications/inter-rat-handover-between-umts-and-wimax

INTECH
open science | open minds

InTech Europe
University Campus STeP Ri
Slavka Krautzeka 83/A
51000 Rijeka, Croatia
Phone: +385 (51) 770 447
Fax: +385 (51) 686 166
www.intechopen.com

InTech China
Unit 405, Office Block, Hotel Equatorial Shanghai
No.65, Yan An Road (West), Shanghai, 200040, China
中国上海市延安西路65号上海国际贵都大饭店办公楼405单元
Phone: +86-21-62489820
Fax: +86-21-62489821