Development of a Novel MultiBody Mechatronic Model for Five-Axis CNC Machine Tool

M. Papananias, S. Sztendel, C. Pislaru
EPSRC Centre for Innovative Manufacturing in Advanced Metrology, University of Huddersfield, UK
Corresponding Author Email: c.pislaru@hud.ac.uk

Abstract

The paper presents the development of a mechatronic hybrid model for Geiss five-axis CNC machine tool using MultiBody-System (MBS) approach. The motion control systems comprising electrical and mechanical elements are analyzed and modeled. The 3D assembly of the machine tool is built in SolidWorks and exported into SimMechanics which interfaces seamlessly with SimPowerSystems, SimDriveline, and Simulink packages. CNC machine tools are mechatronic systems incorporating non-linearities so the proposed multibody mechatronic model (which considers the coupling of elastic mechanical structures with the control systems) represents accurately the dynamic behaviour of the actual machine by using only one simulation environment.

1 Introduction

A number of papers have considered existing methods for modelling and simulating the dynamic behavior of CNC machine tool feed drives [1-4]. Traditional methods for modelling and simulation of CNC machine tool feed drives have used lumped-parameter models with load inertia reflected to the motor [5-6]. To overcome the differences between simulated and experimental results, a modular approach has been applied to the modelling of CNC machine tool feed drives in [7-11] and then in [12], a hybrid model of a CNC machine tool feed drive with distributed load, explicit damping coefficients, backlash and friction was developed.

Computer-Aided Engineering (CAE) simulation is a method which uses computer software packages for the design and analysis of various machines and assemblies. It employs various approaches such as Finite Element Analysis (FEA), MultiBody-System (MBS), or a combination of both. Although FEA and MBS are important part of the Mechanical CAE (MCAE) family, they are essentially different in their respective aims and modus operandi. FEA aims at an approximation of the actual behavior of the mechanical structure of the machine tool by assembling discrete and simple elements through nodes. The MBS simulation has been developed to overcome the drawbacks of the FEA

and is suited for analyzing large rotations and other highly nonlinear motion of full mechanical systems [13-16].

CNC machine tools are mechatronic systems. Therefore, mechatronic modelling, which considers the coupling of elastic mechanical structure with the control system, is of great importance and recently has become an advanced tool in machine tool industry. Mechatronic simulation can be achieved either by coupling a mechanic simulation system and control engineering software or by using only one simulation environment for a complete mechatronic simulation [17-19]. Mechatronic models for CNC machine tools based on the MBS simulation approach result the research of machining dynamics from a new dimension. More precisely, a MBS model takes into account flexible machine structural components, feed drive dynamics, guideways, axis controllers and the motion trajectory generation of the NC control. Furthermore, the MBS enhances the field of examining interactions that occur between machine tool components and the motion dynamic properties obtained with regard to elapsed time [20]. The methods for modelling and simulation of CNC machine tool feed drives have been continuously improving due to CNC machine tools of increasing accuracy are needed when higher tolerances and smoother surfaces are required.

A number of techniques have been developed in modelling and simulation of CNC machine tools feed drives under non-cutting conditions, therefore, in this paper, a multibody mechatronic hybrid model in SIMULINK environment to replicate the dynamic behaviour of the actual machine under cutting and non-cutting conditions is presented. The system under investigation is the GEISS five-axis CNC machine tool existing at the University of Huddersfield. The system dynamics is visualized by the automatically generated three dimensional animation provided by SimMechanics. In section 2, the system is introduced and in section 3, the novel multibody mechatronic hybrid model for the studied system is developed. The simulated results are shown in section 4. Conclusions and suggestions for further work are given in section 5.

2 GEISS five-axis CNC machine tool

The five-axis CNC machine tool existing at the University of Huddersfield (see Figure 1) has two direct-driven rotary axes (*B* and *C*) and three ball-screw driven translation axes (*X, Y,* and *Z*). The controller SIEMENS SINUMERIK 840D sl is linked with the SINAMICS S120 drive system and complemented by the SIMATIC S7-300 automation system. Each feed drive axis contains a three-phase Permanent Magnet Synchronous Motor (PMSM) apart from the gantry drive that has adopted the split (dual-motor) axis feature, and thus it includes two separate PMSMs for the *Y*-axis (*Y*-axis Master and *Y2*-axis Slave). The rotary motion of the motor is converted into linear motion of the nut using the ball-screw assembly driven by the belt drive system. An elastic coupling links the motor to the belt drive. The ball-screw is supported by a set of rolling elements mounted between the screw and nut in order to decrease the friction

and backlash. . In the case of rotational axes, the rotary encoder attached to the motor is used both for rotor speed and rotor angle. In the case of translation axes, the rotary encoder is used only for rotor speed. The feed drive receives feedback signals produced by the linear encoder (mounted on the slide) which directly measures the actual orthogonal trimming head position, and by the attached rotary encoder which provides the rotor speed.

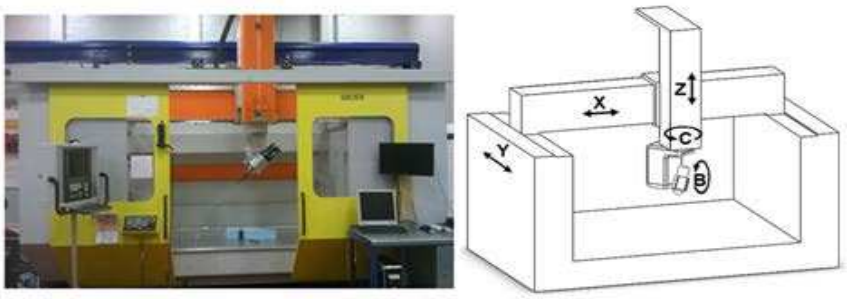

(a) (b)

Figure 1. Five-axis CNC machine tool (a) picture (b) configuration.

3 Development of the novel multibody mechatronic model for the GEISS five-axis CNC machine tool

The 3D (three dimensional) assembly model for the five-axis CNC machine tool (see Figure 2) is built in SolidWorks. The advanced mates are used to define the maximum travel for each translation axis. The SimMechanics link in SolidWorks software is used to export the 3D assembly model of the machine tool. The export procedure (SimMechanics link) generates one XML file (which contains the structure of the assembly and the parameters that define each part) and a set of STL files (which provide the visualization and specify the 3D surface geometry of each CAD part). The STL files are not required to generate the model, but they are required for the visualization of CAD assembly. SimMechanics uses the structure and parameters to automatically generate a new SimMechanics first or second generation model during CAD import.

SimMechanics first generation is used for models which require variable gravity and certain complex constraints. First generation is also used to measure reaction or constraint forces. SimMechanics second generation is nearly used for all other cases. The control systems for the multibody system are designed in SIMULINK. The internal visualization tools of SimMechanics can display and animate simplified representations of three-dimension mechanical systems, before and during simulation in MATLAB Handle Graphics window and Virtual world rendered in a virtual reality viewer. The development of models to other simulation environments including Software-in-the-Loop (SIL) systems is also supported by C-code generation with Simulink Coder as shown in [21].

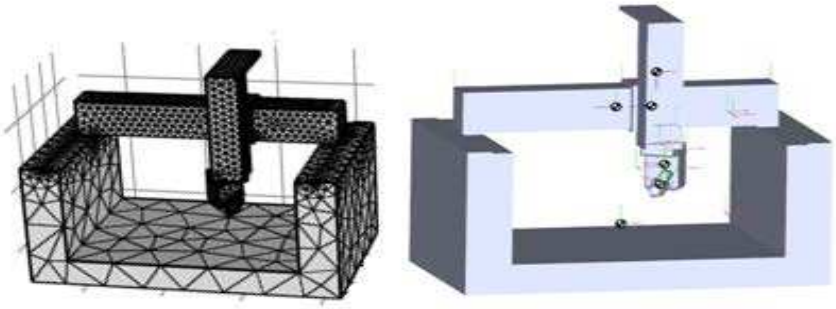

(a) (b)

Figure 2. SolidWorks model (a) SimMechanics model (b).

Once the export procedure is completed, the 3D assembly model of the machine tool is imported into SimMechanics. The novel multibody mechatronic (see Figure 3) contains the five feed drive models developed in SIMULINK and coupled with the SimMechanics model.

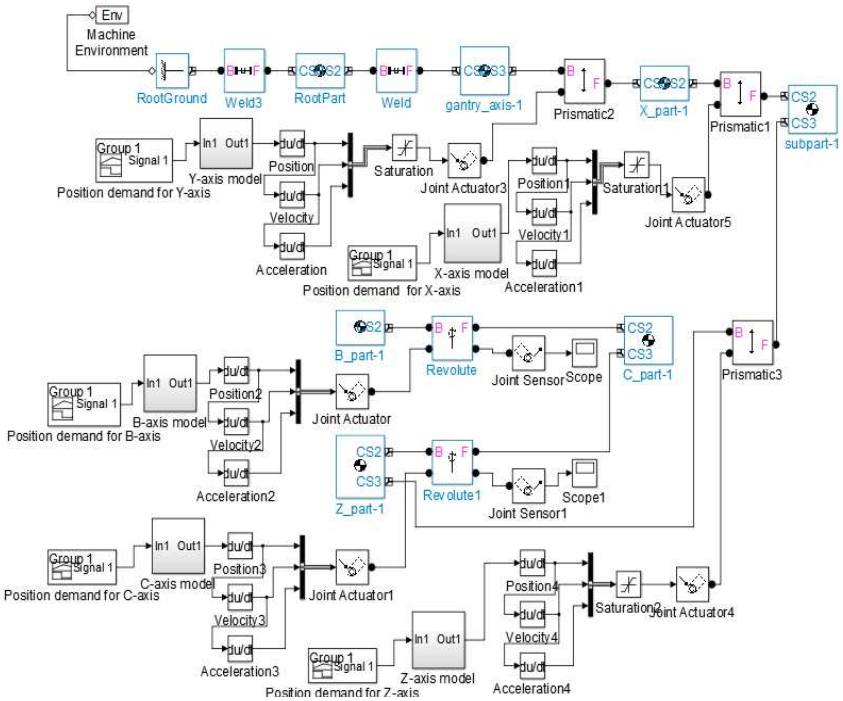

Figure 3. SIMULINK implementation of the multibody mechatronic model.

The *'Machine Environment'* block defines the mechanical simulation environment for the machine to which the block is connected; gravity,

dimensionality, analysis mode, constraint solver type, tolerances, linearization, and visualization. A machine is considered as a complete, connected diagram of SimMechanics blocks topologically distinct from other complete SimMechanics block diagrams. It is responsible for the simulation of the machine, the interpretation of mechanical constraints, and the linearization of simulation. This block also determines whether and how to display the machine in visualization. The *'rootground'* block (ground block), which is required in a SimMechanics model to be valid, represents an immobile ground point at rest in the absolute inertia world reference frame. As a result, its connection with a joint prevents one side of that joint from moving. Exactly one ground block is connected to a *'Machine Environment'* block in each machine of the model. A *'weld'* block represents a joint with zero Degrees of Freedom (DoF). Thus, the two bodies, which are connected to either side of this block, are locked rigidly to one another, with no possible relative motion. So, the *'rootground'* block refers to *'RootPart'* body block (body of infinite mass) that acts both as a reference frame at rest for a whole machine and as a fixed base for attaching machine components such as the*'gantry_axis-1'* body block in this case (see Figure 3).

A *'prismatic'* block represents one translational DoF along a specified axis between two bodies, while a *'revolute'* block represents one rotational DoF about a specified axis between two bodies. A prismatic and a revolute joint are SimMechanics primitive joints and include both sensor and actuator ports. A *'joint actuator'* block actuates a joint primitive with generalized force/torque (force for translational motion along a prismatic joint primitive and torque for rotational motion about a revolute joint primitive) or linear/angular position, velocity, and acceleration motion signals (translational motion for a prismatic joint primitive, in relation to linear position, velocity, and acceleration and rotational motion for a revolute joint primitive, in relation to angular position, velocity, and acceleration). The generalized force or the motion is defined by a Simulink input signal. Motion input signals must be bundled into one signal (as shown in Figure 3).

The blocks included in the block '*X-axis model'* are presented in Figure 4 and the blocks for other SIMULINK models are explained in [21]. The technical details of the practical elements are included in the dialogue boxes of the various blocks so the model reflects the dynamic behaviour of the practical machine. SimMechanics does not recognize the advanced mates used to limit the maximum travel of translation axes in SolidWorks. Therefore *'saturation'* blocks are added to limit the input signal of joint actuator to the upper and lower saturation values. The rotor angles for the *B* and *C* axes are used as input signals for the *'joint actuator'* block, while the translation motion (through the ideal translational motion sensor) is used as an input for the *'saturation'* blocks in the models for the translation axes (*X*, *Y*, and *Z*). Sztendel *et al.* in [21] presents the development and implementation of a SIL platform allowing the real-time simulation of the hybrid model of the feed drive from the gantry axis of the CNC machine tool.

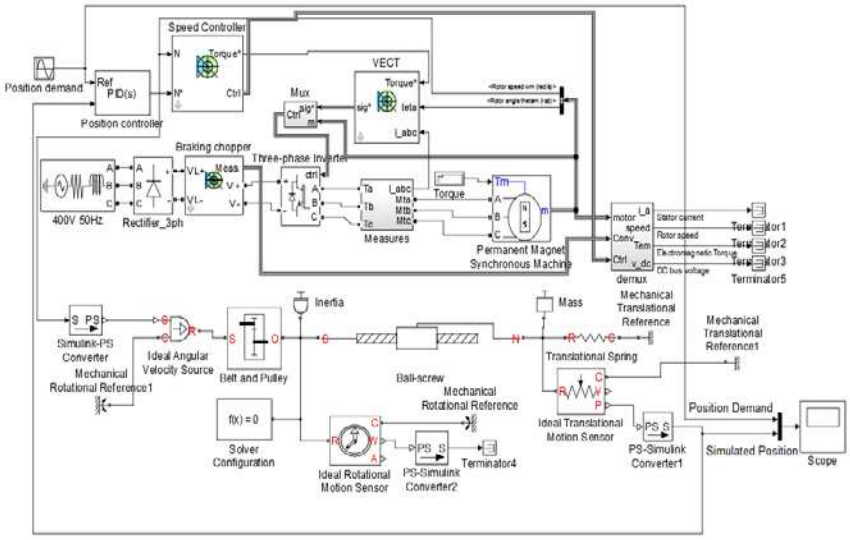

Figure 4. Details for the block '*X-axis model*'.

4 Simulation results

Figure 5 (a) presents the simulated sine response of *Z*-axis feed drive for a constant load torque of 4 N m. The linear positioning error for *Z*-axis (see Figure 5 b) is the difference between the position demand and the simulated position of the orthogonal trimming head.

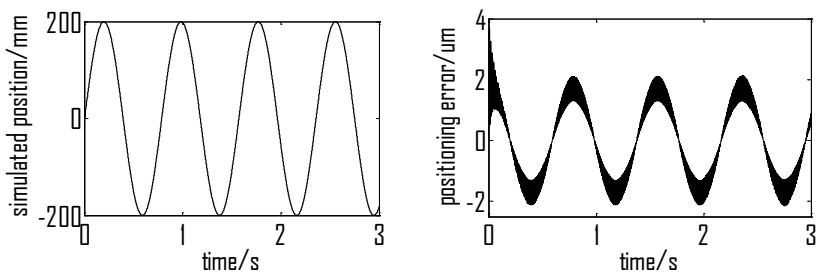

(a) (b)

Figure 5. Simulated results for *Z*-axis feed drive (constant load torque); a) simulated position and b) positioning error.

Figure 6 (a) depicts the simulated sine response of *Z*-axis feed drive for a variable load torque (5 N m for time ϵ (0, 1) s; -5 N m for time ϵ (1, 2) s; 5 N m for time ϵ (2, 3) s). The linear positioning error for *Z*-axis in this case is presented in Figure 6 (b).

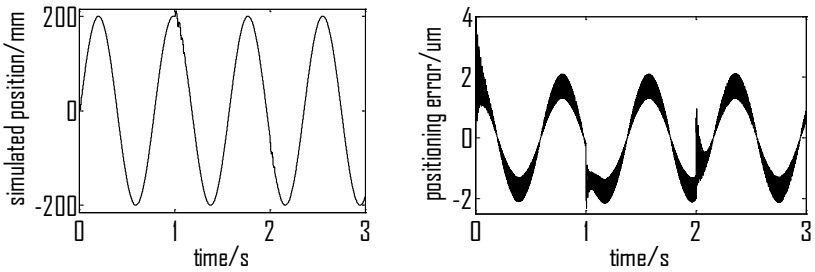

(a) (b)

Figure 6. Simulated results for Z-axis feed drive (variable load torque); a) simulated position and b) positioning error.

Figure 7(a) illustrates the simulated response of *X*-axis feed drive to trapezoidal input for a constant load torque of 6 N m. The linear positioning error for *X*-axis in this case is shown in Figure 7 (b).

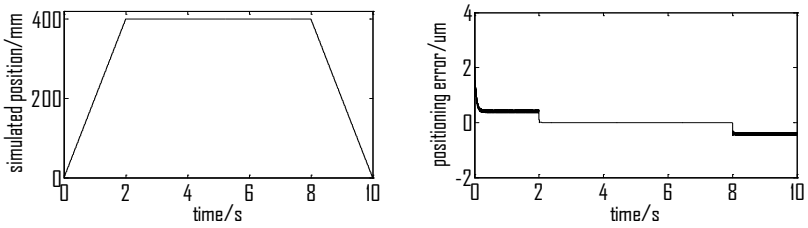

(a) (b)

Figure 7. Simulated results for *X*-axis feed drive (constant load torque); a) simulated position and b) positioning error.

Figure 8(a) portrays the simulated response of *X*-axis feed drive to trapezoidal input for a variable load torque (8 N m for time ϵ (0,4) s; -8 N m for time ϵ (4, 8) s; 8 N m for time ϵ (8, 10) s). The linear positioning error for *X*-axis in this case is depicted in Figure 8 (b).

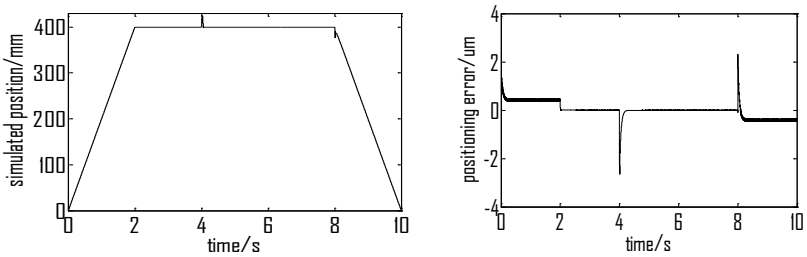

(a) (b)

Figure 8. Simulated results for *X*-axis feed drive (variable load torque); a) simulated position and b) positioning error.

Figure 9(a) illustrates the simulated ramp response of *Y*-axis (Master) feed drive for a constant load torque of 7 N m. The linear positioning error for *Y*-axis in this case is portrayed in Figure 9 (b).

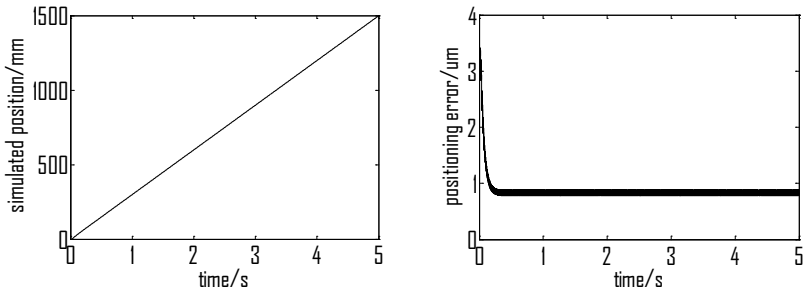

(a) (b)

Figure 9. Simulated results for *Y*-axis feed drive (constant load torque); a) simulated position and b) positioning error.

Figure 10(a) presents the simulated ramp response of *Y*-axis (Master) feed drive for a variable load torque (5 N m for time ϵ (0,2) s; -4 N m for time ϵ (2, 4) s; 5 N m for time ϵ (4, 5) s). The linear positioning error for *Y*-axis in this case is presented in Figure 10 (b).

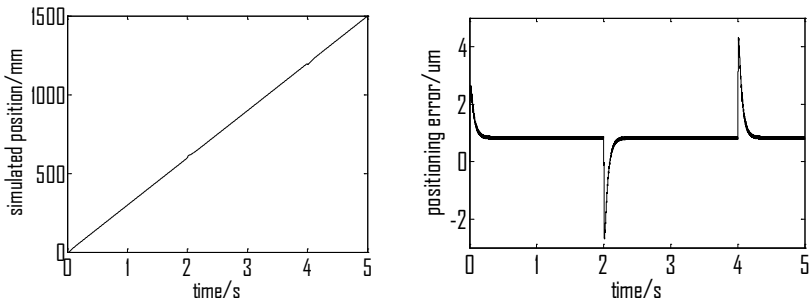

(a) (b)

Figure 10. Simulated results for *Y*-axis feed drive (variable load torque); a) simulated position and b) positioning error.

The values of the positioning errors are in the order of microns which correspond to the measured data from the actual machine so the proposed model is validated. Also it is important to note the variable load torque generates small disturbances in the simulated position but the signals stabilize very quickly afterwards so the system is stable.

5 Conclusions and further work

The paper presents the development of a mechatronic hybrid model for five-axis CNC machine tool using MBS simulation approach. The model is implemented in SIMULINK using the technical details of the practical machine components so the simulated results represent the machine dynamic behavior. Also the feed drives models are tested for variable load torques which occur in the cutting processes. The 3D assembly of the CNC machine tool is built in SolidWorks and imported into SimMechanics using the SimMechanics link software. So the five-axis SIMULINK model simulates the motion of translational and rotational axes through a seamless integration of the 3D assembly created in SolidWorks with SimMechanics and SIMULINK blocks.

The five-axis CNC machine tool is modelled element by element for achieving a realistic model that represents the actual dynamics of machine tool feed drives. The combination of MATLAB/SIMULINK/SimMechanics and SolidWorks software packages is proved as a fast and efficient solution for developing a multibody mechatronic hybrid model for the five-axis CNC machine tool. SimMechanics toolbox allows to define the rigid bodies through the dialog box (including the mass of the body and moment of inertial tensor, the coordinates for the center of gravity (CG) of the body). Unfortunately, it does not recognize the advanced mates, and therefore *saturation* blocks are added to limit the input signal of joint actuator to the upper and lower saturation values. Also SimMechanics first generation is proved more appropriate for modelling the studied system.

The detailed CAD model for the GEISS machine in SolidWorks and development of MBS simulation approach in SimMechanics could provide useful information about the interactions that occur between the machine components and their dynamic properties obtained with regard to elapsed time. The developed model can be included in SIL implementation using dSPACE real-time system [21]. To sum up, this novel model containing blocks from SimPowerSystems, SimDriveline, and SimMechanics fulfills the main purpose of this work and contributes to modern machine tool industry making possible the performance evaluation of machine tools and the production of even more accurate products with lower costs and time, simultaneously.

References

[1] Pislaru C 2013 *Int. J. Mech. Eng.* vol 2, pp 39-44

[2] Altintas Y 2011 *Manufacturing automation: metal cutting mechanics, machine tool vibrations, and CNC design*, Cambridge: Cambridge University Press

[3] Pislaru C, Ford DG, Moreno-Castaneda VY 2005 *Proc. LAMDAMAP 2005 (Cranfield, UK)*, pp 220-229

[4] Pislaru C, Ford DG and Myers A 2006 *Proc. EUSPEN 2006 (Baden bei Wien, Austria),* pp 147-151

[5] Leonhard W 2001 *Control of Electrical Drives (3rd ed),* Germany: Springer

[6] Erkorkmaz K and Altintas Y 2001 *Int. J. of Machine Tools & Manuf.* vol 41, pp 1487–1509

[7] Pislaru C, Ford DG and Freeman JM 1999 *Proc. of Int. Conf. (Nuremberg, Germany) PCIM 99,* pp 259-264

[8] Pislaru C, Ford DG and Freeman JM 1999 *Proc. of Int. Conf. LAMDAMAP 1999 (Newcastle upon Tyne, UK),* pp 335-343

[9] Erkorkmaz K, Altintas Y and Yeung CH 2006 *Annals of CIRP,* vol 55, pp 399-402

[10] Pislaru C, Ford DG and Freeman JM 2001 *Proc. of Int. Conf. LAMDAMAP 2001 (Birmingham, UK),* pp 301-313

[11] Pislaru C, Ford DG and Freeman JM 2002 *Proc. of OPTIM 2002 (Brasov, Romania),* pp 559-564

[12] Pislaru C, Ford DG and Holroyd G 2004 *Proc. IMechE,* I vol 218, pp 111-120

[13] Zulaika J and Campa FJ 2009 *Machine Tools for High Performance Machining* ed LN Lopez de Lacalle and A Lamikiz, Spain: Springer, pp 47-73

[14] Zaeh MF, Oertli T and Milberg J 2004 *CIRP Annals – Manuf. Techn.* vol 53, pp 289-292

[15] Shabana AA 2005. *Dynamics of Multibody Systems (3rd ed),* United States of America: Cambridge

[16] Altintas Y, Brecher C, Weck M and Witt S 2005 *Annals of CIRP,* vol 54, pp 651 – 673

[17] Sztendel S and Pislaru C 2009 *Proc. of 9th Int. Conf. on LAMDAMAP 2009 (Brunel University, UK),* pp 147-155

[18] Neugebauer R, Scheffler C and Wabner M 2011 *CIRP J. of Manuf. Sc. and Techn.* vol 4, pp 71-79

[19] Magnani G and Rocco P 2009 *Mechatronics* vol 20, pp 85-101

[20] Reinhart G and Weissenberger M 1999 *Proc. IEEE/ASME Int. Conf. of Adv. Intel. Mechatr. (Atlanta, GA),* pp 605-610

[21] Sztendel S, Papananias M and Pislaru C 2015 *Proc. of 11th Int. Conf. LAMDAMAP 2015, (University of Huddersfield, UK),* to be published.