An approximate procedure for a general analytical expression of the Prandtl membrane analogy in linear elastic pure torsion

Gil-Martín, L.M. [a*]; *Palomares, A.* [b]; *Hernández-Montes, E.* [c]

[a] Department of Structural Mechanics, University of Granada (UGR). Campus Universitario de Fuentenueva s/n. 18072 Granada, Spain. mlgil@ugr.es. Corresponding author.

[b] Applied Mathematics, University of Granada (UGR). Campus Universitario de Fuentenueva s/n. 18072 Granada, Spain. anpalom@ugr.es.

[c] Department of Structural Mechanics, University of Granada (UGR). Campus Universitario de Fuentenueva s/n. 18072 Granada, Spain. emontes@ugr.es.

Abstract

For pure torsion in linear elasticity, if the shape of cross-section is defined by a closed-form analytical expression satisfying certain conditions, the shear stress in each of the principal Cartesian directions can be obtained by the derivation of the stress function, whose analytical expression can be obtained from the Prandtl analogy. In this paper, a general methodology to obtain an approximate analytical expression of the Prandtl membrane is presented. The proposed methodology uses two variable quadratic piecewise functions to define the Prandtl membrane. This approximate procedure can be applied to any cross-section shape, and it has been proved be especially suitable for steel shapes, for which the proposed method leads to values close to the ones obtained with more precise methods. Several examples are presented.

Keywords: pure torsion, linear elasticity, Prandtl analogy, piecewise functions.

Introduction

Elastic pure torsion is a fundamental topic in the field of both mechanical and civil engineering and it is matter of study in classical Mechanics of Materials courses [1,2]. The understanding of torsion in different types of shapes is still a topic of interest for researchers, professors and engineers [3–7].

There is extensive literature regarding both analytical and numerical methods applied to the study of the Saint-Venant torsion problem for bars having arbitrary constant cross-sections. Approximate solutions of both elastic and plastic torsion problems can be obtained using several numerical methods [5] and in particular using finite element method (FEM) [3,6].

The first torsion studies were carried out by Coulomb[8]. Coulomb studied straight members with circular cross-sections subjected to linear elastic pure torsion (i.e. equal and opposite end torques with both ends free of constraints). The torsion formulation for these types of sections (i.e. circular sections) is derived from the basic mechanics of materials concepts, assuming that: plane sections which are perpendicular to the longitudinal axis of the element remain plane, the shearing strain caused by twisting (γ)

has a linear variation from zero at the center to a maximum at the perimeter of the section, and that the material is both elastic and homogeneous.

The so-called Coulomb theory is not applicable to non-circular cross-sections, because non-circular sections warp, that is, experience out-of-plane deformations when they are subjected to pure torsion. Saint-Venant [9] derived his theory considering that: the cross-section rotates during twisting around a fixed point (the center of twist), the warping deformation (ψ) is the same for all the cross-sections of the member, and the angle of twist per unit length of the bar (θ) is constant. Considering small deformations, the general solution of the torsion problem can be obtained from the theory of linear elasticity imposing equilibrium, compatibility and boundary conditions[1,2], Fig. 1.

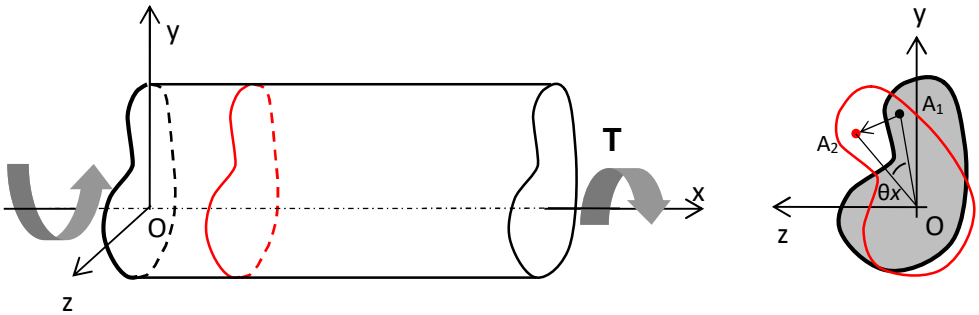

Figure 1. *Pure torsion in a non-circular member.*

It is known that, according to the Saint-Venant formulation [9], the shear stresses in a member subjected to pure torsion are given by:

$$\begin{aligned} \tau_{xy}(y,z) &= \frac{\partial \Gamma}{\partial z} = G\,\theta\left(\frac{\partial \psi}{\partial y} - z\right) \\ \tau_{xz}(y,z) &= -\frac{\partial \Gamma}{\partial y} = G\,\theta\left(\frac{\partial \psi}{\partial z} + y\right) \end{aligned} \tag{1}$$

With Γ as the Prandtl stress function, which verifies that:

$$\frac{\partial^2 \Gamma}{\partial y^2} + \frac{\partial^2 \Gamma}{\partial z^2} = \Delta\Gamma = -2G\theta \quad and \quad \frac{d\Gamma}{ds} = 0 \tag{2}$$

In the above expressions, G is the shear modulus of elasticity and s the line defining the perimeter of the cross-section. Axes x, y and z are the principal Cartesian ones shown in Fig. 2.

The resisting torsional moment is related to the Prandtl stress function as follows:

$$T = 2\iint_{\Omega} \Gamma\, dA \tag{3}$$

That is, the resisting torsional moment, T, is twice the volume beneath the surface defined by Γ.

Prandtl [10,11] realized that the differential equation that governs the response of straight members in torsion is fortuitously analogous to the one governing the

deformations of an elastic weightless membrane with negligible bending rigidity fixed to the perimeter of the cross-section and subjected to uniform pressure, *p*. The membrane, which must have a thickness which is small enough to not present shear strength (e.g. a soap-film), counteracts the pressure with a constant tensile force along its perimeter, *S*. See Fig. 2.

The equivalence between a membrane and the pure torsion problem is obtained by the adjustment of the constants, that is: by replacing *p/S* with $2G\theta$ [12,13].

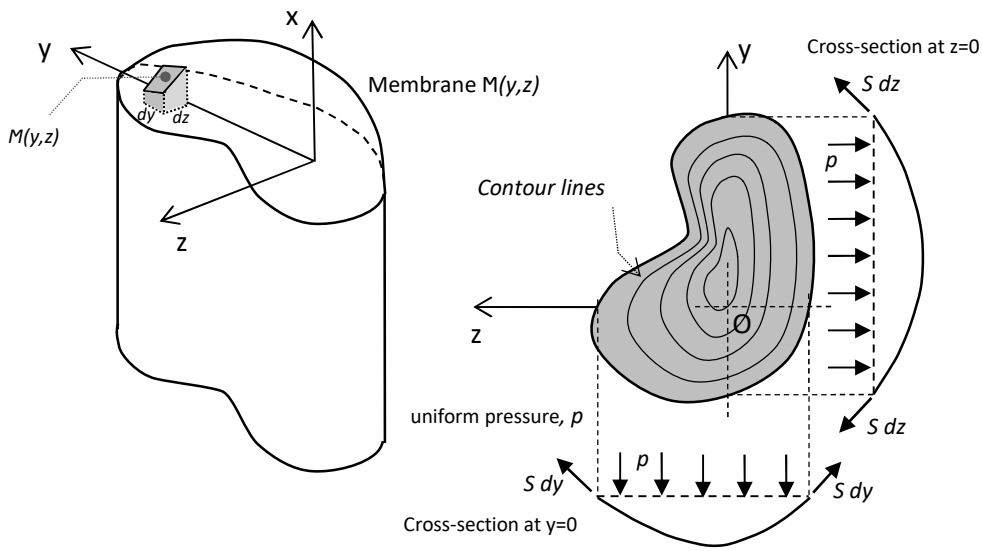

Figure 2. Prandtl elastic membrane analogy

In this work, an approximate general method to obtain a mathematical expression of the linear elastic pure torsion problem is presented. The proposed method is based on the analogy of the membrane and in the use of quadratic piecewise functions of two variables. The main advantage of the presented methodology is its simplicity, which makes it very interesting from both pedagogic and practical points of views. Several examples are presented to validate the proposed approximation.

As in the classical books of steel structures, in this paper the torsion problem is studied by dividing the members according to their cross-section as: thin-walled open cross-sections, thin-walled open sections formed by several plates and solid cross-sections.

2. Practical application of the Prandtl analogy.

It can be proved that if the contour of the cross-section can be expressed as:

$$f(y,z)=0 \text{ being } \Delta f(y,z) = constant \tag{4}$$

then it is possible to find a Prandtl stress function with the form:

$$\Gamma(y,z) = K_c f\left(y,z\right) \tag{5}$$

with K_c as a constant to be determined. Taking the above conditions into account, it can be proved that:

$$\begin{aligned} &\Delta\Gamma(y,z) = K_c \Delta f(y,z) = \text{constant} \quad in \;\; A \\ &\Gamma(y,z) = K_c f\,(y,z) = 0 \qquad\qquad\quad in \;\; pA \end{aligned} \tag{6}$$

with A and pA as the area of the cross-section and its perimeter, respectively.

The value of K_c can be obtained from Eq. (3) as:

$$K_c = \frac{T}{2 \iint_A f(y,z)\, d\Omega} \tag{7}$$

the angle of twist per unit length of the bar, θ, is obtained from Eq. (2):

$$\theta = -\frac{\Delta\Gamma}{2\,G} = -\frac{K_c\,\Delta \mathrm{f(y,z)}}{2\,G} \tag{8}$$

The St. Venant torsional moment of inertia (also called moment of inertia for pure torsion or torsion constant), I_t, can be deduced by combining Eq. (7) and Eq. (8) as:

$$I_t = \frac{T}{G\theta} = -\frac{4 \iint_A f(y,z)\, dA}{\Delta f(y,z)} \tag{9}$$

Case 1. Conic solid cross-sections.

In the case of solid cross-sections whose contours verify Eq. (4), the application of the membrane analogy is easy, and the stress distribution on the element subjected to pure torsion can be directly obtained. So, for these cross-sections there exist exact elastic solutions as well as plastic solutions [4].

Let us consider the elliptical cross-section represented in Fig. 3, whose contour is defined by the expression:

$$f(y,z) = 1 - \left(\frac{\mathrm{y}^2}{1} + \frac{\mathrm{z}^2}{4} \right) = 0 \tag{10}$$

Because the function in Eq. (10) verifies the conditions given in Eq.(4), the stress function can be expressed as:

$$\Gamma(y,z) = x_0 \left(1 - \left(y^2 + \frac{z^2}{4} \right) \right) \tag{11}$$

Eq. (11) has been represented in Fig. 3 for values K_c=x_0=1.

The value of x_0 is obtained by considering Eq.(7) as:

$$T = 2{\cdot}x_0 4 \int_0^2 \int_0^{\sqrt{1-z^2/4}} \left(1 - y^2 - \frac{z^2}{4} \right) \mathrm{d}y\mathrm{d}z = 2x_0\pi \rightarrow x_0 = \frac{T}{2\pi} \tag{12}$$

By introducing Eq. (12) into Eq. (11), the Prandtl stress function is:

$$\Gamma(y,z)=\frac{T}{2\pi}\left(1-\left(y^2+\frac{z^2}{4}\right)\right) \tag{13}$$

Once the Γ function is deduced, the shear stress induced by the pure torsion in the cross-section can be obtained by deriving it from Eq. (1) as follows:

$$\begin{aligned}\tau_{xy}(y,z) &= \frac{\partial\Gamma}{\partial z}=-\frac{Tz}{8\pi} \rightarrow \quad \tau_{xy}(1,0)=0 \quad \& \quad \tau_{xy}(0,2)=-\frac{T}{4\pi}\\ \tau_{xz}(y,z) &= -\frac{\partial\Gamma}{\partial y}=\frac{Ty}{\pi} \rightarrow \quad \tau_{xz}(1,0)=\frac{T}{\pi} \quad \& \quad \tau_{xz}(0,2)=0\end{aligned} \tag{14}$$

Values of stresses at points $A(1,0)$ and $B(0,2)$ have been represented in Fig. 3. This figure shows that the magnitude of the stress at point A is twice that at point B.

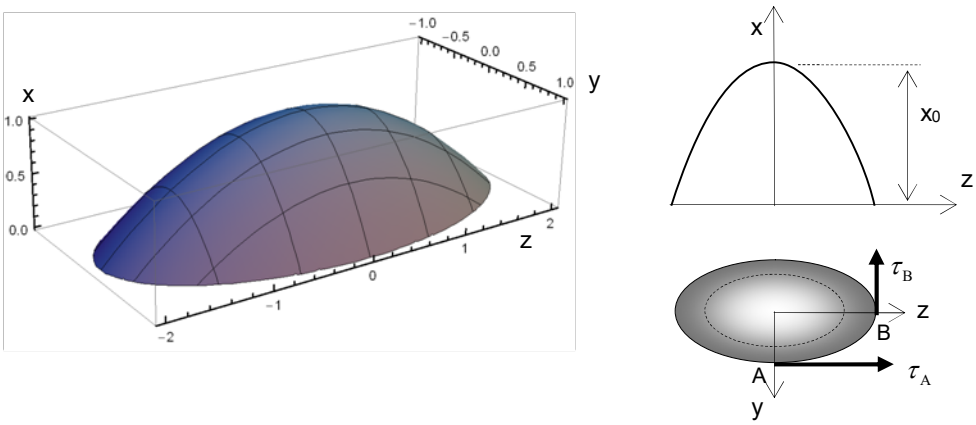

Figure 3. *Membrane analogy for elliptical cross-section.*

Case 2. Thin-walled open cross-sections.

In the case of thin-walled open cross-sections such as the one represented in Fig. 4, the membrane has traditionally been assimilated to a semi-cylinder[13]. The above assumption implies the existence of vertical faces on the narrow sides of the plate –ends- and so, shear stresses are only obtained along the longest sides, τ_{xz} in Fig. 4. Nonetheless, in doing so, the analogy of the membrane can easily be applied as in the previous case.

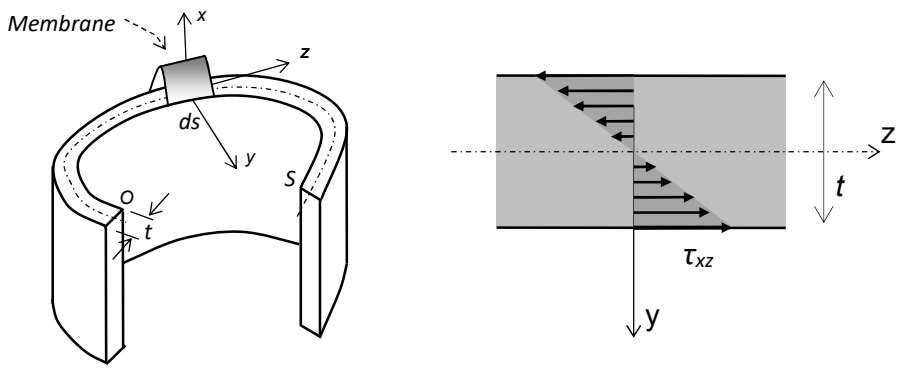

***Figure4**. Membrane in* thin-walled open cross-sections.

The equation of the membrane *M(y,z)* in Fig.4 is obtained as follows:

$$\begin{aligned}
&\Delta M = \frac{\partial^2 M}{\partial y^2} + \frac{\partial^2 M}{\partial z^2} = \frac{\partial^2 M}{\partial y^2} = -\frac{p}{S} \\
&\frac{dM}{dy} = -\frac{p}{S}\, y + k_1 \qquad \left(because \ \left.\frac{dM}{dy}\right|_{y=0} = 0 \rightarrow k_1 = 0 \right) \\
&M = -\frac{p}{S}\frac{y^2}{2} + k_2 \qquad \left(because \ \left. M \right|_{y=\pm t/2} = 0 \rightarrow k_2 = \frac{1}{2}\frac{p}{S}\left(\frac{t}{2}\right)^2 \right) \\
&\qquad \Rightarrow M(y,z) = \frac{p}{2S}\left(\frac{t^2}{4} - y^2\right)
\end{aligned} \tag{15}$$

Once the equation of the membrane [13] is known, the stress function can be obtained by replacing *p/S* by *2Gθ:*

$$\Gamma(y,z) = G\theta\left(\frac{t^2}{4} - y^2\right) \tag{16}$$

The resisting torque and the shear stresses in the cross-section can be obtained from Eq. (3) and Eq. (1), respectively:

$$\begin{aligned}
&T = 2\iint \Gamma(y,z)\, dy\, dz = 2\, G\, \theta \int_{-t/2}^{t/2}\left(\frac{t^2}{4} - y^2\right) dy \int_0^b dz = 2\, G\, \theta\, \frac{t^3}{6} b = \frac{1}{3} G\, \theta\, t^3 b \\
&\tau_{xy} = \frac{\partial \Gamma}{\partial z} = 0 \\
&\tau_{xz} = -\frac{\partial \Gamma}{\partial y} = 2\, G\theta y \Rightarrow \left|\tau_{xz,\max}\right| = G\theta t = \frac{T}{I_t} t
\end{aligned} \tag{17}$$

with *b* as the length of the medium line of the plate and *t* as its thickness.

According to the definition given by Eq. (9), the torsion constant, I_t, for thin-walled open sections according to Eq. (17) is [14]:

$$I_t = \frac{T}{G\theta} = \frac{bt^3}{3} \tag{18}$$

In the case of cross-section formed by several thin-walled plates, it is usually assumed that the resisting torque of the cross section is the summation of those of each single plate that make it up, and that the angle of twist per unit length is the same for all the plates that form the cross-sections [13], that is:

$$\begin{aligned}
&T = T_1 + T_2 + \ldots + T_n \\
&\theta_1 = \theta_2 = \ldots = \theta_n = \theta
\end{aligned} \tag{19}$$

Considering Eq. (9), Eq. (19) leads to:

$$G\theta = \frac{T_1}{I_{t1}} = \ldots = \frac{T_n}{I_{tn}} = \frac{\sum T_i}{\sum I_{ti}} = \frac{T}{\sum I_{ti}} = \frac{T}{I_t} \rightarrow I_t = \sum I_{ti} \tag{20}$$

with the torque resisted by each plate given by:

$$T_j = \frac{I_{tj}}{I_t} T \tag{21}$$

Considering the expressions of the shear stress given in both Eq.(17) and Eq. (21), the maximum stress is going to occur at the thickest plate and its value is:

$$\tau_{máx,j} = G\theta t_j = \frac{T_j}{I_{tj}} t_j = \frac{T}{I_t} t_j \tag{22}$$

3. Approximate general expression of the Prandtl membrane for the case of thin-walled open cross-sections.

The previous section proves that the analogy of the membrane proposed by Prandtl is a practical tool for solving the problem of elastic pure torsion. However, the deduction of the mathematical expression of this membrane (or, equivalently, of the stress function) is not always as immediate as in the cases studied above.

In this work, an approximate general method to obtain a mathematical expression of the membrane is presented. The proposed method is based on the quadratic functions of two variables. The membrane is defined by piecewise functions (i.e. discontinuous functions) which impose certain boundary conditions associated with the problem of torsion.

In the case of an open cross-section formed by a single thin-walled plate, two procedures to obtain an approximated analytical expression of the membrane are presented. Each procedure leads to the so-called semi-cylindrical membrane shape or cap membrane shape, respectively. The two proposed methodologies are summarized in the flow charts of Figs. 5 and 6. Fig. 5 for the semi-cylindrical membrane type and Fig. 6 for the cap membrane type. For the sake of simplicity and without loss of generality, a rectangular plate is considered.

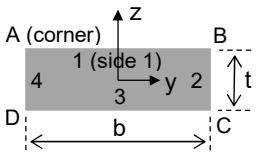

For each side of the plate define a general quadratic function:

$$side\,1:\ f_1(y,z) = 1-\left(k_{11}y^2 + k_{12}z^2 + k_{13}yz + k_{14}y + k_{15}z + k_{16}\right)$$

$$side\,2:\ f_2(y,z) = 1-\left(k_{21}y^2 + k_{22}z^2 + k_{23}yz + k_{24}y + k_{25}z + k_{26}\right)$$

$$side\,3:\ f_3(y,z) = 1-\left(k_{31}y^2 + k_{32}z^2 + k_{33}yz + k_{34}y + k_{35}z + k_{36}\right)$$

$$side\,4:\ f_4(y,z) = 1-\left(k_{41}y^2 + k_{42}z^2 + k_{43}yz + k_{44}y + k_{45}z + k_{46}\right)$$

Imposed conditions

Laplacian of the functions must be constant. It is imposed Laplacian equal to –1 (i.e. p/S=1):

$$\Delta f_1(y,z) = -1\ ;\ \Delta f_2(y,z) = -1\ ;\ \Delta f_3(y,z) = -1\ ;\ \Delta f_4(y,z) = -1$$

Boundary conditions relative to the perimeter: functions are zero at both corners and a mid-length of each side:

$$f_1(y_A,z_A) = f_1(y_B,z_B) = f_1\left(\frac{y_A+y_B}{2},\frac{z_A+z_B}{2}\right) = 0 \qquad f_2(y_B,z_B) = f_2(y_C,z_C) = f_2\left(\frac{y_B+y_C}{2},\frac{z_B+z_C}{2}\right) = 0$$

$$f_3(y_C,z_C) = f_3(y_D,z_D) = f_3\left(\frac{y_C+y_D}{2},\frac{z_C+z_D}{2}\right) = 0 \qquad f_4(y_A,z_A) = f_4(y_D,z_D) = f_4\left(\frac{y_A+y_D}{2},\frac{z_A+z_D}{2}\right) = 0$$

Boundary conditions relative to the continuity at corners:

$$f_1(y_A,z_A) = f_4(y_A,z_A) \quad f_1(y_B,z_B) = f_2(y_B,z_B) \quad f_2(y_C,z_C) = f_3(y_C,z_C) \quad f_3(y_D,z_D) = f_4(y_D,z_D)$$

Horizontal slope at the center of the plate (0,0):

$$\left.\frac{\partial f_1(y,z)}{\partial z}\right|_{(0,0)} = 0\ ;\ \left.\frac{\partial f_2(y,z)}{\partial y}\right|_{(0,0)} = 0\ ;\ \left.\frac{\partial f_3(y,z)}{\partial z}\right|_{(0,0)} = 0\ ;\ \left.\frac{\partial f_4(y,z)}{\partial y}\right|_{(0,0)} = 0$$

Solve the system of equations to obtain constants k_{ij}

Cyl_membrane =Min [f_i (y,z)]

Figure 5. *Procedure to obtain the membrane in the case of single thin-walled open section. Case of membrane type semi-cylinder.*

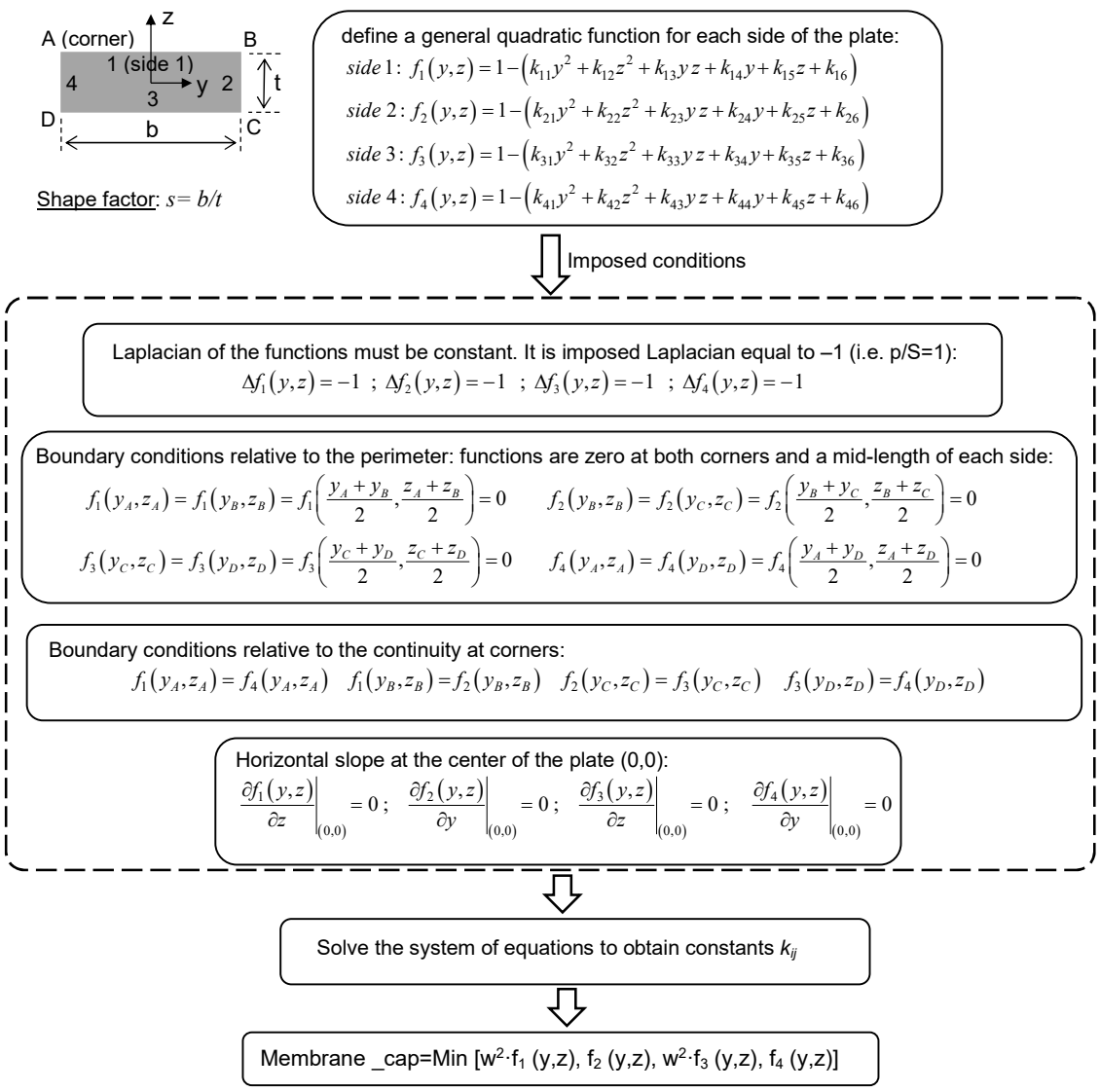

Figure 6. *Procedure to obtain the membrane in the case of single thin-walled open section. Case of membrane type cap.*

The comparison of the flow charts in Figs. 5 and 6 shows that both procedures only differ in the two last steps. In the approximate method summarized in Fig. 6, the functions defined on the two longer sides ($f_1(y,z)$ and $f_3(y,z)$) are multiplied by the square of the shape factor of the plate, w, defined as b/t.

As can be seen in Figs. 5 and 6, membranes are obtained as the envelope for the bottom (i.e. the minimum) of the functions defined on each side of the perimeter.

Assuming that the plate is made of structural steel S235 (f_y=235 MPa), for which the ultimate shear stress according to the Von Mises yielding criterion is $\tau_{ult}=235/\sqrt{3}$, the maximum value of the torsional rigidity can be obtained from Eq. (17) as:

$$G\theta_{ult}=\frac{|\tau_{xz,\max}|}{t}=\frac{235/\sqrt{3}}{t} \tag{23}$$

By adjusting the constant to move from the membrane to the stress function and considering that *p/S* has been assumed equal to 1 (see Figures 5 and 6), the stress function corresponding to the ultimate twisting moment for the two membranes obtained from procedures indicated in Figs. 5 and 6 are given by:

$$\begin{aligned} \Gamma_{ult,cyl} &= 2G\theta_{ult} \quad for\ the\ Membrane_cyl \\ \Gamma_{ult,cap} &= \frac{2G\theta_{ult}}{w^2} \quad for\ the\ Membrane_cap \end{aligned} \tag{24}$$

The ultimate twisting moment, T_{ult}, can be obtained as twice the volume beneath the surface defined by Γ_{ult} (with Γ_{ult} equal to $\Gamma_{ult,cyl}$ or $\Gamma_{ult,cap}$).

In Fig.7, the graphical representation of both $\Gamma_{ult,cyl}$ and $\Gamma_{ult,cap}$ for several shape factors of the plate (*w=b/t*) and for *t* equal to 1 mm is represented. As can be seen in Fig. 7a, for *w*=1, both procedures lead to an identical membrane. However, for *w*>1, the membranes obtained from the procedures summarized in Figs. 5 and 6 are different: the membrane obtained from Fig. 5 is semi-cylindrical whereas that obtained from Fig. 6 has a cap shape.

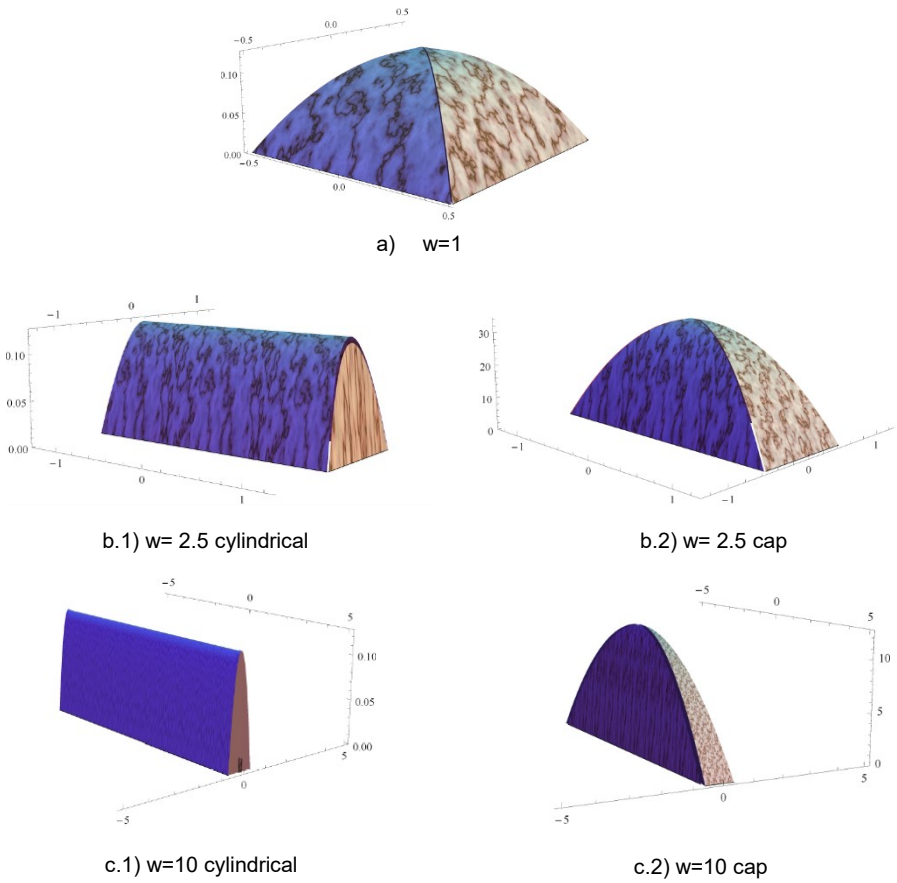

Figure 7. *Stress function obtained from the proposed methodology for t=1mm and w=1, 2.5 and 10 and for both types of membranes.*

It is known that the shape factor of the plate, *w,* affects the response of the member subjected to pure torsion [13,15]. Let β be a factor such as:

$$I_t = \beta b t^3 \tag{25}$$

If the maximum shear stress (Eq. (17)) is equal to the ultimate stress, the following expression of β can be deduced:

$$|\tau_{\max}| = \frac{T}{I_t} t = \frac{T}{\beta b t^2} = \tau_{ult} \Rightarrow \beta = \frac{T_{ult}/bt^2}{\tau_{ult}} \tag{26}$$

Values of β deduced from the approximate stress functions obtained from both the procedures described in Figs. 5 and 6 have been plotted as functions of the shape factor in Fig.8. In this figure, values of the β coefficient proposed by both Avallone et al. [15] and the Spanish Steel Standard EAE [16] have also been represented. As can be seen in Fig. 8, in the case of cylindrical membrane (figures on the left side of Fig.7) and $w \geq 12.5$, the value of β is equal to the one traditionally adopted for rectangular thin-walled open sections, $0.333 \approx 1/3$ (see Eq. (18)). On the contrary, as Fig. 8 shows, the torsional rigidity obtained from the cylindrical membrane method is larger than the one proposed by Avallone [15] and EAE [16] for $w \leq 12.5$.

Regarding the cap type membrane, the value of coefficient β is constant for all the shape factors and equal to 0.25 as is shown in Fig. 8.

As can be seen in Fig.8, the values of β proposed in the relevant literature[15,16] are smaller than the ones obtained here from both methods for $w<2$. However, for $w>2$, the values of β in the relevant literature [15,16] range between the values obtained here for both types of membranes.

So, according to the above, from a practical point of view, the advantage of using the cap type membrane for thin-walled open cross-sections is that the torsional inertia is constant (i.e., the same for all values of w) and equal to:

$$I_{t,cap} = 0.25 b t^3 \tag{27}$$

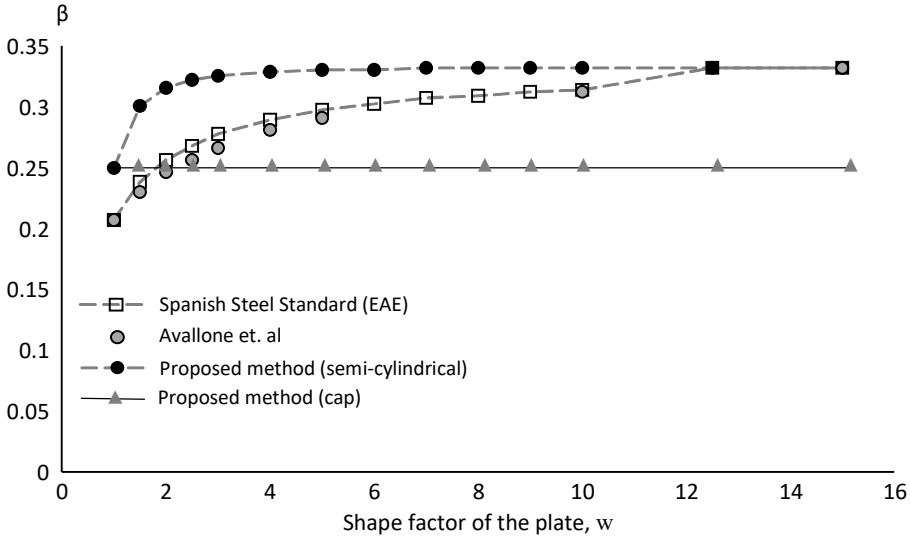

w	EAE [11]	Avallone and Baumeister [10]	Proposed cyllindrical type membrane
1.0	0.208	0.208	0.250000
1.5	0.238	0.231	0.301500
2.0	0.256	0.246	0.316015
2.5	0.269	0.256	0.322409
3.0	0.278	0.267	0.325804
4.0	0.29	0.282	0.329129
5.0	0.298	0.292	0.330650
6.0	0.303	-	0.331475
7.0	0.307	-	0.331969
8.0	0.310	-	0.332290
9.0	0.312	-	0.332509
10.0	0.314	0.312	0.332666
12.5	0.333	-	0.332906
15.0	0.333	0.333	0.333040

Figure 8. *Values of β as a function of the shape factor of the plate, s.*

It can be proved that the mathematical expressions of the stress function corresponding to the ultimate twisting moment (i.e., for which the maximum shear stress equals τ_{ult}) for the cases of both cylindrical and cap type membranes are, respectively:

Cylindrical membrane: $$\Gamma(y,z) = 2G\theta\ Min\left[\left(0.125w^2 - 0.5y^2\right),\left(0.125 - 0.5z^2\right)\right]$$

Cap membrane: $$\Gamma(y,z) = \frac{2G\theta}{w^2}\ Min\left[\left(0.125w^2 - 0.5y^2\right), w^2\left(0.125 - 0.5z^2\right)\right] \quad (28)$$

Values of the ultimate twisting moment, T_{ult}, for both types of membrane (volume beneath the surface) have been represented in Fig.9 for several values of the shape factor of the plate, w.

Fig. 9 shows that the cylindrical membrane leads to a larger resisting twisting moment in the whole range of shape factors considered, and that the bigger the shape factor of the plate, the bigger the difference between the resisting twisting moments obtained from both types of membranes is.

Moreover, it can be proved that for both types of membranes, the twisting moment produced by τ_{xy} (see Fig. 9) is half the total twisting moment, *T*.

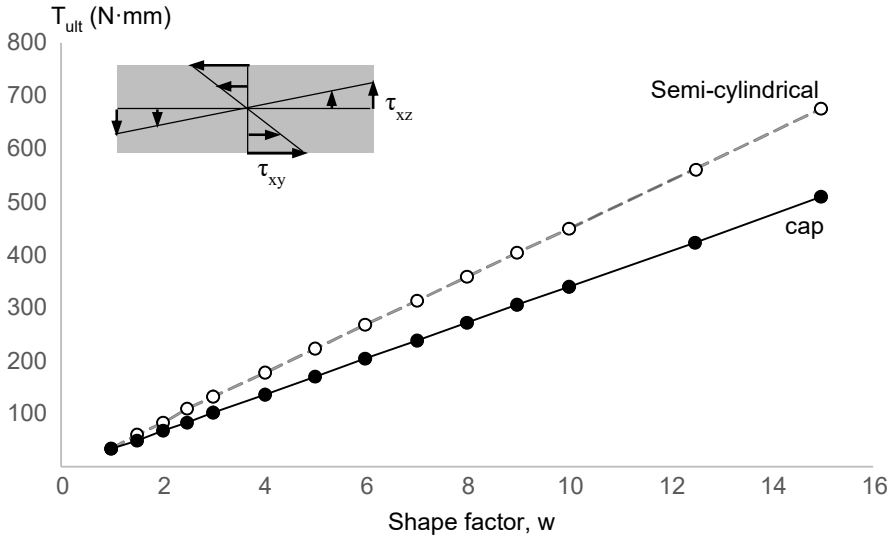

Figure 9. *Values of ultimate twisting moments of each type of membrane as a function of the shape factor of the plate.*

The above methodology can be extended to thin-walled open sections formed by several plates. For the sake of simplicity, sections with two plates (T and cross shapes, respectively) are going to be analyzed here.

It has been assumed that the shape factor of the two plates forming the section is bigger than 10, which is true for sections used in steel structures. As traditionally done, the semi-cylindrical membrane is going to be adopted. The procedure to obtain the Prandtl membrane is summarized in Fig.10 and the Prandtl membranes obtained for the two cross-sections studied are drawn in Fig.11.

As can be seen in Fig. 10, in this case, the membrane is obtained as the envelope for the top (i.e. the maximum) of the membranes corresponding to the two plates that, in this case, form the cross-section.

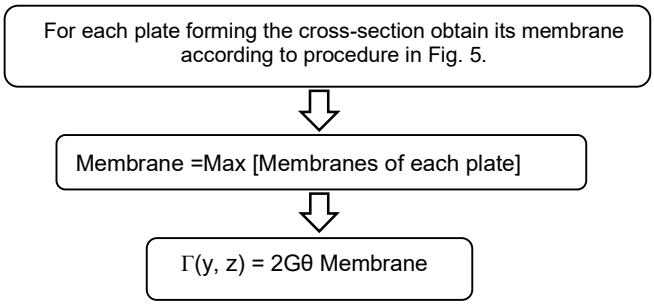

Figure 10. *Procedure to obtain the membrane in the case of thin-walled open section formed by several plates.*

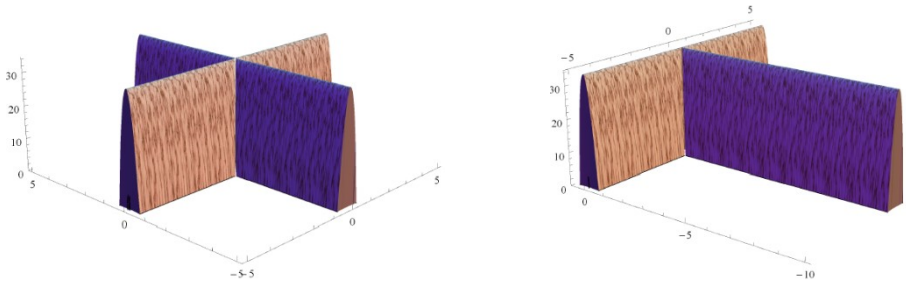

Figure 11. *Membranes for Cross and T sections.*

Based on the ultimate shear stress, the ultimate or maximum twisting moment can be obtained as the volume beneath the membrane (see Eq. (23)-(24)).

In order to take the shape of the cross-section into account, an empirical correction factor η affecting the torsional constant, I_t, is usually introduced [14]:

$$I_t = \eta \sum I_{ti} = \eta \beta \sum b_i t_i^3 \tag{29}$$

Values of η obtained for several shape factors, *w*, are summarized in Table 1 for both T and cross sections formed by two identical plates with *t*=1 mm (Fig. 11). In Table 1 the ultimate twisting moment is obtained as the summation of the corresponding ones from each plate (as is usually done in practice), and the resisting torque is based on the shear ultimate stress.

		T section	Cross section
w	*β*	*η*	
10.0	0.3327	1.000	0.999
12.5	0.3329	1.000	1.000
15.0	1/3	0.999	0.999

Table 1. *Values of the correction factor η for both T and Cross sections formed by two identical plates (t=1 mm) for several shape factors.*

The values of η proposed by the Spanish Standard of Steel Structures EAE [16] for cross and T sections are 1.0 and 1.1, respectively. As can be seen in Table 1, the values are slightly smaller than the value of 1.1 proposed by the EAE [16] for T sections and are in the range of the experimental values proposed by Vlasov [14] for Tees rolled-steel sections (0.92-1.25).

4. General approximate analytical expression of the Prandtl membrane for the case of solid cross-sections.

As was commented on in Section 1, when the curve defining the perimeter of the section is explicitly known the expression of the membrane may be obtained, as in the case of cubic curves. However, for other types of cross-section shapes, the calculation of an analytical equation of the membrane is not possible.

In this section, a general procedure to obtain the Prandtl membrane for the case of solid cross-sections is presented. The proposed procedure is an extension of the ones presented in the previous sections and it is also based on two variable quadratic piecewise functions to which certain boundary conditions are imposed.

To illustrate the proposed procedure (and without loss of generality), a solid hexagonal cross-section is considered. The methodology is summarized in the flow chart of Fig. 12.

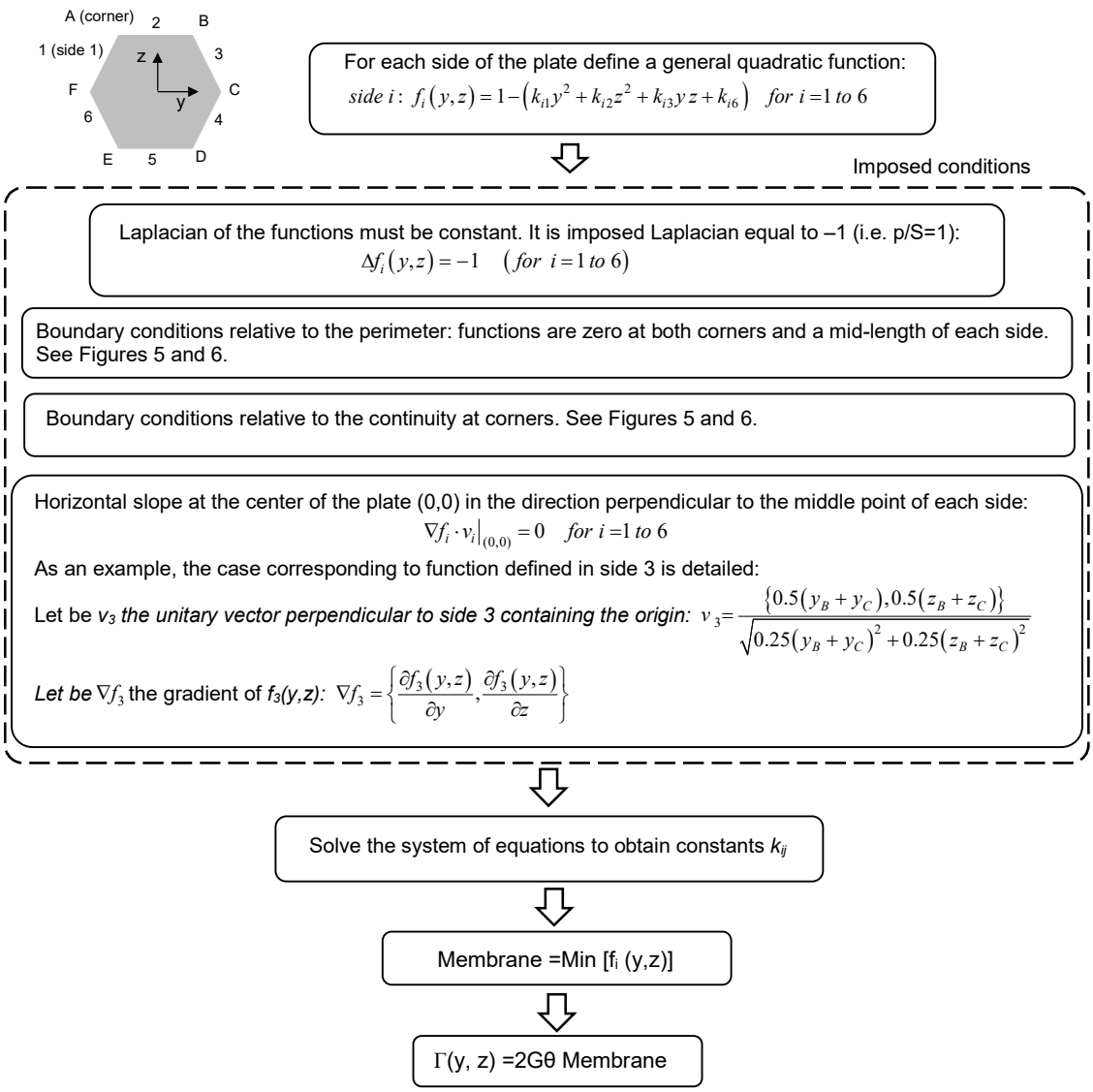

Figure 12. *Procedure to obtain the membrane in the case of solid section. Case of hexagonal cross-section.*

The stress function corresponding to the ultimate twisting moment (for which $\tau_{max} = \tau_{ult}$, equal to $f_y/\sqrt{3}$ in the case of steel structures) can be easily obtained following the steps in Fig. 12 with the help of any available symbolic mathematics software such as Mathematica, Matlab or Maxima. In Fig.13 the membrane obtained for the hexagon is represented.

Once the expression of Γ(y,z) is known, the shear stresses $\tau_{xy}(y,z)$ and $\tau_{xz}(y,z)$ can be obtained by conveniently deriving (see Eq.(1)) with the resultant stress as:

$$\tau = \sqrt{\tau_{xy}^2 + \tau_{xz}^2} \tag{30}$$

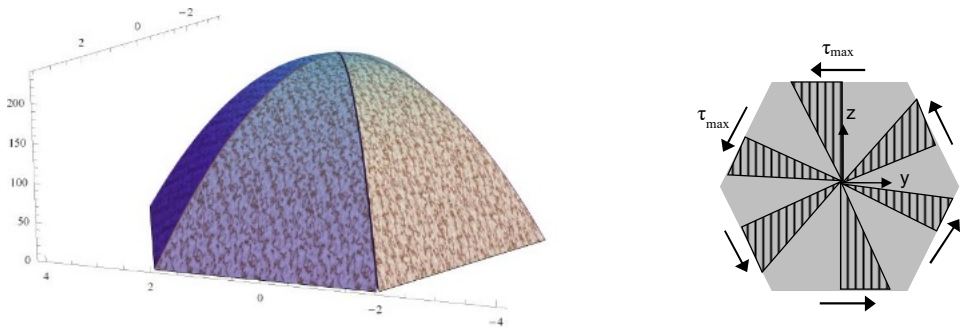

Figure 13. *Stress function for the case of a solid hexagonal cross-section.*

5. Conclusions

Up to now, the elastic pure torsion problem had been analytically solved for only a few cross-section shapes. Experimental methods using soap bubbles were usually used before the current numerical tools were available. An easy methodology is presented here to obtain an approximate analytical expression of the stress function in linear elastic pure torsion problems. The method is based on the composition of quadratic functions to which certain boundary conditions are imposed. The main advantages of the proposed method are both its versatility, it is applicable to any shape of cross-section, and its simplicity. The procedure presented is a quick tool that can be used in the absence of, or in addition to, other more accurate methods. The proposed method is especially suitable for shape ratios (breadth over thickness) larger than 12, a common situation in structural steel laminated shapes.

Declaration of Competing Interest

The authors declared that there is no conflict of interest.

References

[1] S.J. Timoshenko, Strength of Materials, Part 2, New York, 1941.

[2] J.N. Timoshenko, S. P., and Goodier, Theory of Elasticity, 3rd ed., McGraw-Hill, New York, 1970.

[3] C.M. Noor, Ahmed K and Andersen, Mixed isoparametric elements for Saint-Venant torsion, Comput. Methods Appl. Mech. Eng. 6 (1975) 195–218.

[4] W.H. Yang, A practical method for limit torsion problems, Comput. Methods Appl. Mech. Eng. 19 (1979) 151–158.

[5] U. Schramm, W.D. Pilkey, Structural shape optimization for the torsion problem using direct integration and B-splines, Comput. Methods Appl. Mech. Eng. 107 (1993) 251–268.

[6] W. Wagner, F. Gruttmann, Finite element analysis of Saint-Venant torsion problem with exact integration of the elastic-plastic constitutive equations, Comput. Methods Appl. Mech. Eng. 190 (2001) 3831–3848.

[7] L.M. Gil-Martín, E. Hernández-Montes, Principal Sectorial coordinate system, Arch. Appl. Mech. (2019).

[8] C.A. Coulomb, Reserches théoriques et experimentels sur la force de torsion et sur l'elasticité des fils de metal, Mémoires L´Académie R. Des Sci. (1874) 229–269.

[9] B. de Saint-Venant, Mémoire sur la torsion des prismes. [S.I.], 1853.

[10] L. Prandtl, Zur torsion von prismatischen stäben, Phys. Zeitschr. (1903).

[11] Love, article 224, page 322, (1944).

[12] A.C. Ugural, Mechanics of Materials, Hoboken, N.J. : Wiley, New York, 2008.

[13] Ugural A.C. and Fenster S.K., Advanced Strength and Applied Elasticity, Fifth ed., Prentice Hall International, 2011.

[14] V.Z. Vlasov, Thin Walled Elastic Beams, (1959).

[15] T. and S.A.M. Avallone E.A. , Baumeister III, Mark's Standard Handbook for Mechanical Engineers, 11th ed., New York, 2006.

[16] Ministerio de Fomento, EAE- Instrucción de Acero Estructural, 2011.