Photonic Generation and Transmission of 2 Gbit/s Power-Efficient Impulse Radio for OOK Modulated Ultrawideband over Fiber System

Li, Pengxiao ; Chen, Hongwei ; Wang, Xu; Yu, Hongchen ; Chen, Minghua; Xie, Shizhong

Published in:
IEEE Photonics Technology Letters

Publication date:
2013

Photonic Generation and Transmission of 2 Gbit/s Power-Efficient IR-UWB Signals Employing an Electro-optic Phase Modulator

Pengxiao Li, Hongwei Chen, *Member, IEEE*, Xu Wang, *Senior Member, IEEE*, Hongchen Yu, Minghua Chen, *Member, IEEE*, and Shizhong Xie, *Senior Member, IEEE*

***Abstract*—We experimentally demonstrate a power-efficient ultrawideband (UWB) generation scheme using an electro-optical phase modulator. The generated UWB pulses are fully Federal Communication Commission (FCC) compliant with high power efficiency of 52.6%. Furthermore, 2 Gbit/s on-off keying (OOK) modulated modified UWB triplet signals are transmitted over 20 km optical fiber link without any obvious spectra or pulse shape distortions, and error-free transmission is achieved with power penalties less than 1.5 dB.**

***Index Terms*—Ultrawideband (UWB), radio over fiber (RoF), microwave photonics, phase modulation, power spectral density.**

I. Introduction

Impulse radio ultrawideband (UWB) over fiber technology has been proposed to extend the limited wireless transmission range of UWB systems to several or tens of kilometers [1]. The generation, modulation and transmission of UWB pulses in the optical domain have been extensively investigated in the past few years [2]–[5]. However, the power spectral densities (PSDs) of these pulses are far from satisfied with the U.S. Federal Communication Commission (FCC) regulations, especially in the global positioning system (GPS) band (0.96–1.61 GHz), where a deep notch of 35 dB is required. Recently, some UWB photonic generation schemes aimed at enhancing power spectral efficiency have been presented [6-8]. It is very interesting that power-efficient UWB pulses can be generated by means of linear sum of two time-delayed asymmetric monocycles [7] or modified doublets [8]. However, multi-wavelength operation in [7] will increase the cost of the system and suffer from fiber dispersion-induced transmission distance limitation. In [8], the balanced detection has to be applied to generate a pair of polarity-reversed doublets, which will increase the complexity of the base station. In addition, since a power-efficient pulse is only obtained in the electrical domain, this scheme cannot accommodate seamless transmission over fiber networks.

Manuscript received xx xx, xxxx. This work was supported by National Program on Key Basic Research Project (973) under Contract 2012CB315703, NSFC under Contract 60807026, 61111130188 and the Program for New Century Excellent Talents in University (NCET-10-0520).

P. Li, H. Chen*, H. Yu, M. Chen, and S. Xie are with Tsinghua National Laboratory for Information Science and Technology (TNList) and the Department of Electronic Engineering, Tsinghua University, 100084, Beijing, China (e-mail: px-li08@mails.tsinghua.edu.cn; chenhw@tsinghua.edu.cn; hcyu07@gmail.com; chenmh@tsinghua.edu.cn; xsz-dee@tsinghua.edu.cn).

X. Wang is with the Joint Research Institute for Integrated Systems, School of Engineering and Physical Sciences, Heriot-Watt University, Edinburgh, EH14 4AS, U.K. (e-mail: x.wang@hw.ac.uk).

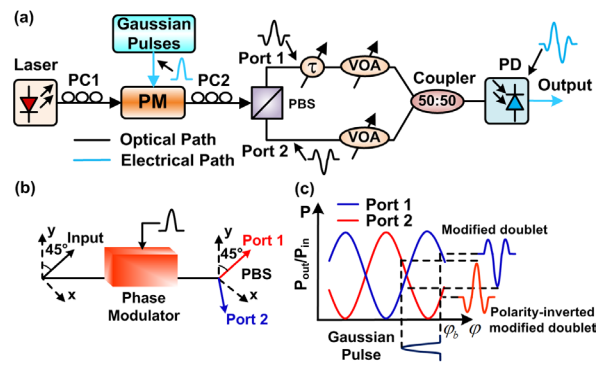

Fig. 1. (a) Schematic diagram of the proposal for power-efficient UWB pulse generation (b) illustration of modified doublets generator based on polarization interference (c) principle of shaping a Gaussian pulse into two complementary modified doublets.

In this letter, we focus on the generation and transmission of power-efficient UWB pulses directly in the optical domain under single wavelength operation. In our experiment, a pair of complementary modified doublets is generated simultaneously in the same scheme utilizing an electro-optic phase modulator (PM) in conjunction with a polarization-beam splitter (PBS), and then they are delayed and linearly combined to create a fully FCC-compliant UWB pulse with spectral power efficiency as high as 52.6%. The transmission performance of 2 Gbit/s OOK modulated UWB signals over a 20 km single mode fiber (SMF) link is also evaluated by measuring the electrical spectra, eye diagrams and bit error rate (BER). Thanks to single wavelength operation, no obvious spectra or pulse shape distortion is observed and an error-free transmission is successfully achieved with the power penalty less than 1.5 dB.

II. Principle and Experimental Setup

A diagram of the proposed scheme for power-efficient UWB pulse generation is shown in Fig. 1(a). A linearly polarized lightwave oriented at an angle of 45° to one principal axis of the PM via a polarization controller (PC1) is sent to the PM and phase modulated by electrical Gaussian pulses. A PBS is then connected with the PM via PC2 with principal axis ±45° to those of the PM to realize pulse shaping based on polarization interference as shown in Fig. 1(b). The pulse generator shown in

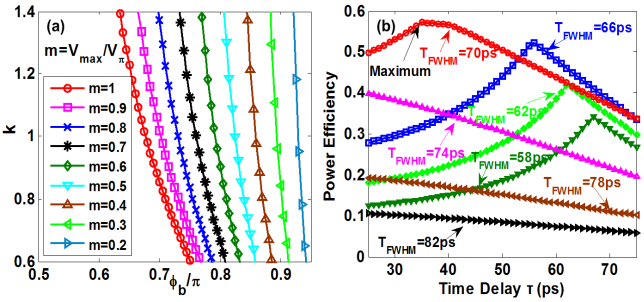

Fig. 2. (a) Scaling parameter k versus bias phase φ_b for different peak amplitude of the input Gaussian pulse (b) calculated power efficiency of the modified triplets for different input pulsewidth and time delay.

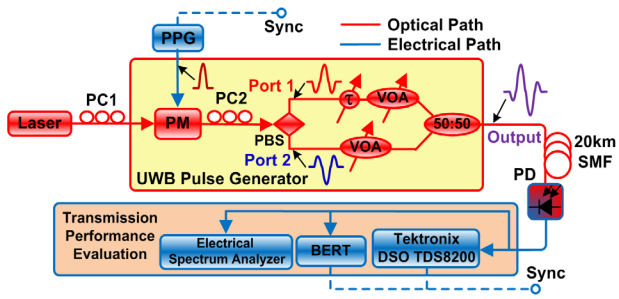

Fig. 3. Experimental setup of power-efficient UWB over fiber system.

Fig. 1(b), which is equivalent to a dual-output-port intensity modulator, has two complementary output transfer functions as shown in Fig. 1(c) and they can be expressed by

$$P_{out1,2}(t)=\frac{1}{2}P_{in}\left\{1\pm\cos\left[\frac{\pi}{V_\pi}V(t)+\varphi_b\right]\right\}, \quad (1)$$

where P_{in} and $P_{out1,2}$ are the optical power of the input and two output ports, $V(t)$ is the voltage of the applied electrical pulse, V_π is the half-wave voltage of the PM and φ_b is the initial bias phase introduced by PC2. The shaped pulses from the two branches are combined again by a 50:50 coupler after one is delayed from the other. The output optical signals from the coupler are then detected by a photodetector (PD). When the Gaussian pulse applied to the PM is biased on the linear region of the transfer functions, only a monocycle pulse can be produced. However, two polarity-inverted modified doublets whose amplitude ratio between the positive and negative part is slightly modified [8], can be generated when the modulator works near the nonlinear portion, as shown in Fig. 1(c). The pulses can be expressed as

$$d_{1,2}(t)=\pm\left(1-\frac{4\ln 2\cdot kt^2}{T_{\mathrm{FWHM}}^2}\right)\exp\left(-\frac{2\ln 2\cdot t^2}{T_{\mathrm{FWHM}}^2}\right), \quad (2)$$

where k is an arbitrary scaling parameter and T_{FWHM} denotes the input Gaussian pulsewidth (full width at half maximum). The simulation result in Fig. 2(a) shows that, k in (2) can be flexibly adjusted by tuning the bias phase φ_b of the input Gaussian pulses with different amplitude V_{max}, which is varied from V_π to $0.2V_\pi$. It indicates that as V_{max} becomes smaller k will be more sensitive to φ_b, causing problems in controlling k practically.

A spectral notch of which depth and location is determined by k can be obtained in the lower frequency band of the modified doublet PSDs [8]. When k=1.16 a deep notch of about 60 dB at GPS band is achieved and the linearly combination of two such pulses with a time delay (τ) between them will create a fully FCC-compliant UWB pulse called modified triplet. Fig. 2(b)

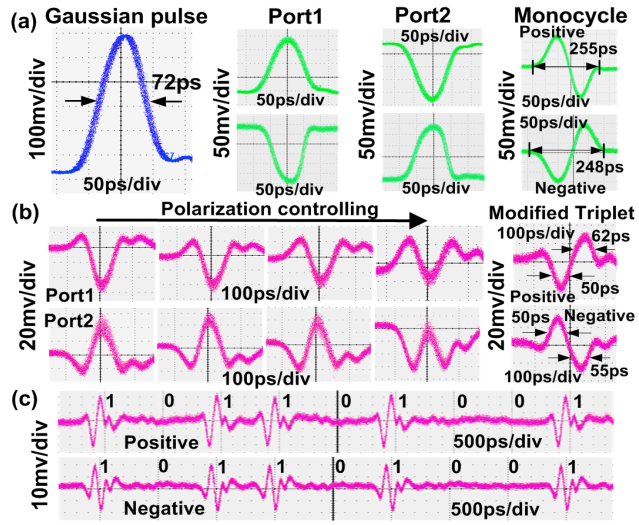

Fig. 4. (a) Gaussian-like pulse from PPG and generated monocycle pulses (b) evolution of the modified doublets and the obtained modified triplets (c) OOK modulated UWB signals with a pattern of "101101001".

shows the calculated power efficiency of such modified triplets, which is defined as the average power of the pulse normalized by the total admissible power under FCC mask within 3.1–10.6 GHz [6]. It is worthy to note that the maximum power spectral efficiency of 57.2% can be achieved when the input Gaussian pulsewidth is 70 ps and the time delay is about 35 ps.

The experimental setup is shown in Fig. 3. A lightwave centered at 1550nm from a DFB laser is first sent to a PM-based power-efficient UWB pulse generator, as described in Fig. 1(a). A Gaussian-like pulse train generated from a pulse pattern generator (PPG, Anritsu MP1800A) with an edited pattern of single "1" in every 7 bits and a bit rate of 14 Gb/s, resulting in an equivalent repetition rate of 2 Gb/s is applied to the PM. The peak amplitude of the input pulse is ~4 V and the pulsewidth is ~72 ps. The PM has a half-wave voltage of ~4.5V. Proper time delay and equal power between the two arms are guaranteed by using a tunable delay line (TDL General Photonics VariDelay^{TM}) with the resolution of ~1 ps and delay range of 600 ps and two variable optical attenuators (VOA). In order to further evaluate the transmission performance, OOK modulated modified triplets are distributed over a 20 km SMF link and then detected by a 45 GHz PD at the receiver side. The received signal is sent to a BER tester (BERT) for BER measurement, and both a 40 GHz digital sampling oscilloscope (DSO, Tektronix TDS 8200) and an electrical spectrum analyzer (ESA, Anritsu MS2668C) with a resolution bandwidth (RBW) of 1 MHz are employed to measure the eye diagrams and spectra of the UWB pulses.

III. Experimental Results and Discussion

When the proposed UWB generator is working in the linear region, both positive and negative Gaussian-like pulses are observed at the two output ports of PBS. The polarity-inversed Gaussian pulses are then delayed and combined to generate a monocycle pulse with time duration of about 250 ps, as shown in Fig. 4(a). The PC2 is then carefully tuned while observing the output PSDs of the generated UWB pulses, which is equivalent to adjusting the parameter k in (2). When the input Gaussian pulse is biased near the nonlinear portion, modified doublets are

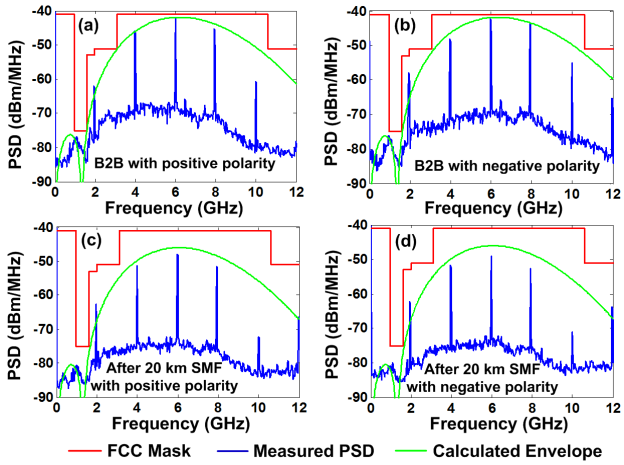

Fig. 5. Electrical spectra of OOK modulated FCC-compliant UWB signals before and after 20 km SMF at 2 Gbit/s. (a) and (b) positive polarity (c) and (d) negative polarity. RBW=1 MHz.

observed of which the amplitude ratio between positive and negative part can be finely controlled as shown in Fig. 4(b). In addition, both positive and negative modified triplets with pulse width of about 50 ps are also displayed in Fig. 4(b).The pulse asymmetry and deviation from the theoretical pulses is caused by the nonideal input Gaussian pulse shape and pulsewidth limited by the bandwidth of PPG and inconsistent performance of the two branches. Moreover, the polarity of the generated modified triplets can be changed simply by adjusting PC2. Fig. 4(c) clearly shows 2 Gbit/s OOK modulated UWB pulses with a bit pattern of "101101001", where the bit "1" and "0" consist of a sequence of Gaussian bit pattern "1000000" and "0000000" edited by the PPG, respectively.

The measured PSDs of the OOK modulated UWB signals following a data pattern of $2^{11}-1$ pseudo-random bit sequence (PRBS) in cases of back to back (B2B) and after 20 km SMF transmission are shown in Fig. 5. As can be seen from Fig. 5(a) and (b), the electrical spectra of both positive and negative modified triplet pulses are fully compliant with FCC regulation, and a good agreement between the measured and calculated PSDs is obtained with $k = 1.16$, $T_{\mathrm{FWHM}} = 72$ ps and $\tau = 35$ ps. The central frequency of the pulses is about 6.3 GHz, with 10 dB bandwidth of 7.2 GHz, indicating about 114% fractional bandwidth. The measured power efficiency within 3.1–10.6 GHz band is about 52.6% slightly less than the maximum one. Comparing Fig. 5(a) and (b) with Fig. 5 (c) and (d) respectively, no obvious distortion is observed in the continuous spectral components of the PSDs, which contain the data information of the modulated UWB signals, except for the power reduction after fiber transmission.

BER performance of both the positive and negative 2 Gbit/s FCC-compliant UWB signals for B2B and fiber transmission is also experimentally investigated, as shown in Fig. 6. To well maintain the temporal shape of the signal and avoid spectral distortion, the detected UWB signals are directly sent into a BERT and only the large positive peak of the UWB pulse is used for BER estimation since the modulation format is OOK. Almost an error-free transmission of 3.2×10^{-9} and 2.5×10^{-9} can be achieved for the both polarities, respectively, and the power penalties are less than 1.5 dB, mainly due to the reduction of

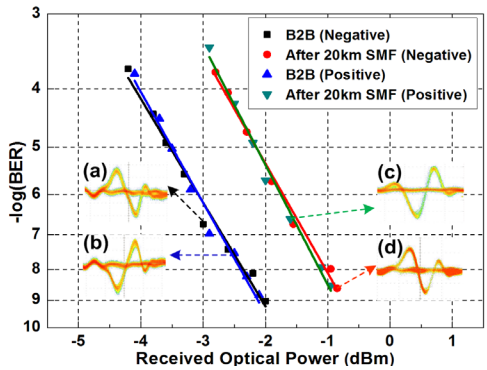

Fig. 6. BER curves and eye diagrams of the FCC-compliant UWB signals for B2B and after 20 km fiber transmission.

signal to noise ratio (SNR) induced by the optical fiber loss and chromatic dispersion. Additionally, the received eye diagrams also confirm the error free operation and negligible pulse shape distortion after transmission, comparing the results shown in the Fig. 6 insets (c) and (d) with (a) and (b), respectively.

IV. Conclusion

In conclusion, a PM-based power-efficient UWB generation scheme is experimentally demonstrated. High flexibility of the proposed scheme allows photonic generation of monocycles, modified doublets and modified triplets with opposite polarities. A spectral power efficiency of 52.6% for the FCC-compliant UWB pulse is realized. The OOK modulated modified triplets are transmitted at 2 Gbit/s over 20 km SMF without any obvious spectra and pulse shape distortion benefiting from the single wavelength operation. An error-free transmission is achieved with power penalties less than 1.5 dB. Furthermore, study on the wireless transmission with multiple modulation formats based on this photonic generation scheme will also be investigated in our future work.

References

[1] J. P. Yao, "Photonic for Ultrawideband communications," *IEEE Microw. Mag.*, vol. 10, no. 4, pp. 82-95, Jun. 2009.
[2] J. P. Yao, F. Zeng, and Q. Wang, "Photonic generation of ultrawideband signals," *J. Lightw. Technol.*, vol. 25, no. 11, pp. 3219-3235, Nov. 2007.
[3] H. Chen, M. Chen, T. Wang, M. Li, and S. Xie, "Methods for ultrawideband pulse generation based on optical cross-polarization modulation," *J. Lightw. Technol.*, vol. 26, no. 15, pp. 2492-2499, Aug. 2008.
[4] S. L. Pan and J. P. Yao, "UWB-over-fiber communications: modulation and transmission," *J. Lightw. Technol.*, vol. 28, no. 16, pp. 2445-2455, Aug. 2010.
[5] M. Bolea, J. Mora, B. Ortega, and J. Capmany, "Optical UWB pulse generation using an N tap microwave photonic filter and phase inversion adaptable to different pulse modulation formats," *Opt. Exp.*, vol. 17, no. 7, pp. 5023-5032, Mar. 2009.
[6] M. Abtahi, J. Magne, M. Mirshafiei, L. A. Rusch, and S. LaRochelle, "Generation of power-efficient FCC-compliant UWB waveforms using FBGs: Analysis and experiment," *J. Lightw. Technol.*, vol. 26, no. 5, pp. 628-635, Mar. 2008.
[7] E. Zhou, X. Xu, K. S. Liu, and K. K. Y. Wong, "A power-efficient ultra-wideband pulse generator based on multiple PM-IM conversions," *IEEE Photon. Technol. Lett.*, vol. 22, no. 14, pp. 1063-1065, Jul. 2010.
[8] S. T. Abraha, C. M. Okonkwo, E. Tangdiongga, and A. M. J. Koonen, "Power-efficient impulse radio ultrawideband pulse generator based on the linear sum of modified doublet pulses," *Opt. Lett.*, vol. 36, no. 12, pp. 2363-2365, Jun. 2011.