View metadata, citation and similar papers at core.ac.uk
brought to you by CORE
provided by Loughborough University Institutional Repository

Journal of Nonlinear Mathematical Physics Volume *, Number * (20**), 1–24 Review Article

Steady Water Waves

M. D. GROVES †

† *Department of Mathematical Sciences, Loughborough University, Loughborough, LE11 3TU, UK*
E-mail: M. D. Groves@lboro.ac.uk

Received March 18, 2004

1 Introduction

The classical *water wave problem* concerns the irrotational flow of a perfect fluid of unit density subject to the forces of gravity and surface tension. The fluid motion is described by the Euler equations in a domain bounded below by a rigid horizontal bottom $\{y = -h\}$ and above by a free surface which is described as a graph $\{y = \eta(x, z, t)\}$, where the function η depends upon the two horizontal spatial directions x, z and time t. In terms of an Eulerian velocity potential $\phi(x, y, z, t)$ the mathematical problem is to solve the equations

$$\phi_{xx} + \phi_{yy} + \phi_{zz} = 0 \qquad -h < y < \eta, \tag{1.1}$$

$$\phi_y = 0 \qquad \text{on } y = -h, \tag{1.2}$$

$$\phi_y = \eta_t + \eta_x\phi_x + \eta_z\phi_z \qquad \text{on } y = \eta \tag{1.3}$$

and

$$\phi_t + \frac{1}{2}(\phi_x^2 + \phi_y^2 + \phi_z^2) + g\eta - T\left[\frac{\eta_x}{\sqrt{1+\eta_x^2+\eta_z^2}}\right]_x - T\left[\frac{\eta_z}{\sqrt{1+\eta_x^2+\eta_z^2}}\right]_z = B \qquad \text{on } y = \eta, \tag{1.4}$$

where g and T are respectively the acceleration due to gravity and the coefficient of surface tension and B is a constant called the Bernoulli constant. The above formulation describes *three-dimensional gravity-capillary waves on water of finite depth,* but several variations upon this theme are possible. Solutions which do not depend upon the spatial coordinate z are called *two-dimensional water waves,* solutions with $T = 0$ are called *gravity waves* and the limiting case $h \to \infty$ is the *infinite-depth problem.* There are also versions of the hydrodynamic problem which involve multiple layers of fluids with different densities, or indeed a single fluid with a continuous density stratification. *Steady waves* are water waves of the special form $\eta(x, z, t) = \eta(x - c_1t, z - c_2t)$ $\phi(x, y, t) = \phi(x - c_1t, y, z - c_1t)$; in other words they are uniformly translating in the horizontal direction with velocity $c = (c_1, c_2)$. In this paper we survey some recent mathematical results concerning steady water waves, and in keeping with convention we continue to write x and z as abbreviations for $x - c_1t$, $z - c_2t$.

Copyright © 2004 by M D Groves

The steady water-wave problem is one of the classical problems in applied mathematics, and there is a huge and growing literature in this area. However the majority of published results concentrate on numerical studies or approximations by simper model equations, and there has been far less rigorous mathematical study of the complete hydrodynamic problem formulated above. We therefore adopt a narrow remit in this paper: a survey of the currently available mathematical existence results for steady water waves is given, so that numerical, modelling and stability issues are beyond its scope. Within this narrower field we focus upon three topics in which substantial progress has recently been made and which are likely to witness further rapid growth. The topics are *Stokes waves* (two-dimensional periodic gravity waves on water of infinite depth), the application of *spatial dynamics* to two-dimensional gravity-capillary waves on water of finite depth, and *three-dimensional steady water waves.*

2 Stokes waves

George Gabriel Stokes (1819-1903) was one of the leading early researchers in the field of steady water waves. He was particularly interested in two-dimensional periodic gravity waves on water of infinite depth, and any wave of this kind is now termed a *Stokes wave.* Figure 1(a) shows a simple kind of Stokes wave, namely a smooth, periodic wavetrain which is symmetric about any crest. Stokes [51] also imagined a more exotic sort of periodic wave which has a *stagnation point* at its crest, so that $(\phi_x, \phi_y) = (c, 0)$ at this point (the water is at rest relative to a frame of reference moving with the wave). He conjectured that an *extreme wave* of this type has a corner with contained angle $2\pi/3$ at the stagnation point and is convex between successive crests (Figure 1(b)). Stokes studied periodic water waves using series expansions whose convergence could not be established using the mathematical techniques available in his day. In this section we survey the rigorous existence theories for regular and extreme Stokes waves which have emerged in the century since Stokes's death.

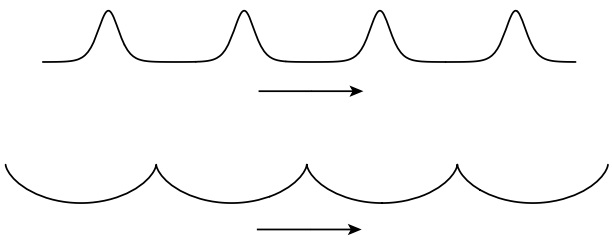

Figure 1. *Symmetric Stokes waves with one crest and one trough per period exhibiting typical long, flat troughs and short, steep crests; the arrow shows the direction of propagation. The upper wave is regular, while the lower wave is an extreme wave of the type envisaged by Stokes.*

2.1 Nekrasov's integral equation

The first rigorous existence theory for Stokes waves was published by Levi-Cività [36]. Levi-Cività looked for symmetric, 2Λ-periodic waves, and appreciating the central difficulty posed by the presence of a free boundary, introduced the following *hodograph trans-*

formation to map the variable fluid domain to a fixed reference configuration. Introduce a new velocity potential $\Phi(x,y) = \phi(x,y) - cx$ which describes the flow in the moving frame of reference, and let $\Psi(x,y)$ be a corresponding stream function, so that $\Phi + \mathrm{i}\Psi$ is a complex potential for the flow. Observe that Ψ is constant on the free surface (a streamline), and we can suppose that it vanishes there; without loss of generality we can also suppose that $\eta(0) = 0$. The mathematical problem is therefore to find functions Φ, Ψ which are conjugate harmonic in the fluid domain $D_\eta = \{y < \eta(x)\}$ and satisfy $\nabla\Phi \to (-c, 0)$, $\nabla\Psi \to (0, -c)$ as $y \to -\infty$ (uniformly in x) together with the boundary conditions

$$\begin{aligned} &\frac{1}{2}|\nabla\Psi|^2 + gy = \frac{1}{2}Q^2 \qquad \text{on } y = \eta, \\ &\frac{1}{2}|\nabla\Phi|^2 + gy = \frac{1}{2}|\nabla\Psi|^2 + gy = \frac{1}{2}Q^2, \quad \Psi = 0 \qquad \text{on } y = \eta, \end{aligned} \tag{2.1}$$

where Q is the speed of the wave at $(x,y) = (0,0)$. Furthermore we have the periodicity and symmetry conditions

$$\begin{aligned} &\Psi(x + 2\Lambda, y) = \Psi(x,y), \quad \Phi(x + 2\Lambda, y) = \Phi(x,y) + 2c\Lambda, \qquad (x,y) \in \bar{D}_\eta, \\ &\Phi(-x,y) = -\Phi(x,y), \quad \Psi(-x,y) = \Psi(x,y), \quad \eta(-x) = \eta(x), \qquad (x,y) \in \bar{D}_\eta. \end{aligned}$$

Straightforward applications of the maximum principle and boundary-point lemma show that $\Psi_y < 0$ in D_η, so that $\Phi_x > 0$ in D_η. The transformation $z \mapsto w(z)$, where $w = -\Phi - \mathrm{i}\Psi$, therefore maps the variable fluid domain conformally to the lower half-plane, and writing $w'(z(w)) = c\exp(\rho(w) + \mathrm{i}\sigma(w))$ (which is valid since $|w'|^2 = |\Phi_x|^2 + |\Psi_x|^2$ does not vanish in D_η), we find that ρ and σ are harmonic functions in the lower half-plane which vanish as $\Psi \to -\infty$ and are respectively even and odd $2c\Lambda$-periodic functions of Φ. The nonlinear boundary condition at $y = \eta$ is transformed into

$$\rho_\Phi = \frac{g}{c^3}\mathrm{e}^{-3\rho}\sin\sigma, \qquad \text{on } \Psi = 0, \tag{2.2}$$

which can be further manipulated into the form

$$\sigma_{\tilde{\Psi}}(\tilde{\Phi}) = \frac{\sin\sigma(\tilde{\Phi})}{3(\nu^{-1} + \int_0^{\tilde{\Phi}} \sin\sigma(\mathrm{e}^{\mathrm{i}u})\,\mathrm{d}u)}, \qquad \text{on } \tilde{\Psi} = 0,$$

where $\nu = 3g\Lambda c/\pi Q^3$ and we have introduced the dimensionless variables $(\tilde{\Phi}, \tilde{\Psi}) = \frac{\pi}{\Lambda c}(\Phi, \Psi)$. (An analogous hodograph transformation is available for fluid of finite depth and both apply equally well when surface-tension effects are present; the boundary condition is merely changed a little.)

Straightforward sine-series methods show that $\theta = \sigma|_{\tilde{\Psi}=0}$ satisfies the equation

$$\theta(s) = \frac{2}{\pi}\int_0^\pi \left(\sum_{k=1}^\infty \sin ks \sin kt\right) f(t)\,\mathrm{d}t, \qquad s \in [0,\pi],$$

and summing the series on the right-hand side of this equation, we finally arrive at *Nekrasov's integral equation*

$$\theta(s) = \frac{1}{3\pi}\int_0^\pi \frac{\sin\theta(t)}{\nu^{-1} + \int_0^t \sin\theta(u)\,\mathrm{d}u} \log\left|\frac{\sin\frac{1}{2}(s+t)}{\sin\frac{1}{2}(s-t)}\right| \mathrm{d}t, \qquad s \in [0,\pi] \tag{2.3}$$

(Nekrasov [42, 43]). Notice that $\tan\theta(\tilde{\Phi}) = -\eta'(x)$, so that θ specifies the acute angle (measured clockwise) between the free surface and the horizontal; in particular any continuous solution of Nekrasov's equation which satisfies $\sigma(s) > 0$, $s \in (0,\pi)$ and of course $\sigma(0) = \sigma(\pi) = 0$ corresponds to a smooth-crested Stokes wave with precisely one crest (e.g. at $x = 0$) and one trough (e.g. at $x = \Lambda$) per period.

Levi-Cività and Nekrasov found Stokes waves by solving Nekrasov's integral equation (or equations equivalent to it) using iterative methods which are embedded in modern local bifurcation theory. We can formulate (2.3) as the functional equation

$$F(\theta,\lambda) := \frac{1}{3\pi}T\left(\frac{\sin\theta}{\nu^{-1}+\int_0^t \sin\theta(u)\,\mathrm{d}u}\right) = 0, \quad (Tf)(s) := \int_0^\pi f(t)\log\left|\frac{\sin\frac{1}{2}(s+t)}{\sin\frac{1}{2}(s-t)}\right|\,\mathrm{d}t,$$

in the function space $C_0[0,\pi]$. It is a straightforward exercise to show that $T : C_0[0,\pi] \to C_0[0,\pi]$ is compact and to confirm that $\mathrm{d}_1F[0,3]$ has a simple zero eigenvalue (its kernel is spanned by the function $\sin s$). According to standard local bifurcation theory a branch $\mathcal{B}_{\mathrm{loc}}$ of symmetric small-amplitude Stokes waves emerges from the trivial solution at $\nu = 3$; in fact a supercritical bifurcation takes place.

The existence question for finite-amplitude waves was first tackled by Krasovskii [35], who applied a degree-theoretical argument to prove that for each $\beta \in (0,\pi/6)$ there exists a value ν_β of ν and a continuous, positive solution θ_{ν_β} of (2.3) such that $\sup_{s\in[0,\pi]}\theta_{\nu_\beta} = \beta$. In the course of his work Krasovskii made two further conjectures about Stokes waves, namely that θ_{ν_β} tends to an extreme wave as $\beta \to \pi/6$ and that there is no solution (ν,θ_ν) with $\sup_{s\in[0,\pi]}\theta_\nu > \pi/6$. This result was later improved by Keady & Norbury [31] using the modern global bifurcation theory becoming available at the time. Keady & Norbury showed that the local branch of solutions bifurcating from the trivial solution at $\nu = 3$ extends to a global branch parameterised by $\nu \in (3,\infty)$. The key observation in this respect is that $T : C_0[0,\pi] \to C_0[0,\pi]$ is a compact operator which leaves the closed, convex cone $K_0 = \{f \in C_0[0,\pi] : f \geq 0\}$ invariant (the positivity of the kernel defining T implies that $T[K_0] \subseteq \{f \in C_0[0,\pi] : f > 0\}$); in fact it also leaves the closed, convex cone

$$\begin{aligned} K = \{f \in C_0[0,\pi] : f \geq 0,\ & f(s)/\sin(s/2) \text{ is decreasing for } s \in [0,\pi], \\ & f(t) \leq f(s) \text{ for } s \in [\pi - t, t],\ t \in [\pi/2,\pi]\} \end{aligned}$$

invariant (Toland [54]), and the following result is thus a direct consequence of the global bifurcation theory for operators defined on cones in Banach spaces (Dancer [18]).

Theorem 1 (Topological global bifurcation theory for Stokes waves). *There is a connected global branch $\mathcal{B} \in [0,\infty) \times C_0[0,\pi]$ of solutions to Nekrasov's equation with the properties that*

1. *$(\nu, 0) \in \mathcal{B}$ if and only if $\nu = 3$;*
2. *for each $(\nu,\theta) \in \mathcal{B}\backslash\{(3,0)\}$ we have that $\nu > 3$ and $\theta(s) \in (0,\pi/3)$ for each $s \in (0,\pi)$;*
3. *$\theta'(s) < 0$ for $s \in [\pi/2,\pi]$;*
4. *$\theta(s)/s$ is a decreasing function on $(0,\pi)$.*

A natural approach to the construction of extreme waves is to consider the limit $\nu \to \infty$ along the branch $\mathcal{B}$ (see Toland [53]). It is a relatively straightforward matter to confirm the existence of a sequence $\{\nu_\ell\}$ with $\nu_\ell \to \infty$ as $\ell \to \infty$ which has the property that θ_{ν_ℓ} converges pointwise on $(0, \pi]$ to a function $\theta^\star$ satisfying the limiting form of Nekrasov's equation. The function $\theta^\star$ is continuous on $(0, \pi]$ and takes values in $[0, \pi/3]$, while $\theta(s)$ is bounded away from zero as $s \to 0$; it follows that $\theta^\star$ qualifies as an extreme wave. Substantially more involved calculations are however required to obtain information concerning the behaviour of $\theta^\star(s)$ as $s \to 0$. There are three significant results in this direction, namely the confirmation of the first of Stokes's conjectures by Amick, Fraenkel & Toland [2] and Plotnikov [46, 47], who showed that $\lim_{s\to 0} \theta^\star(s) = \pi/6$, the refutation of Krasovskii's conjectures by McLeod [39], who showed that $\sup_{s\in[0,\pi]} \theta_{\nu_\ell}(s) > \pi/6$ for sufficiently large values of ℓ, and Amick's [1] remarkable upper bound that $\sup_{s\in[0,\pi]} \theta_\nu(s) < (1.086)\pi/6$ for each solution on $\mathcal{B}$. (The numerical evidence indicates that $\theta_\nu(s)$ oscillates rapidly around $\pi/6$ as $s \to 0$ for sufficiently large values of ν (see Chandler & Graham [11] and Byatt-Smith [9]), but there is no rigorous proof of this fact.)

The second of Stokes's conjectures has recently been confirmed by Plotnikov & Toland [49]. Observe that the integral equation

$$\theta(s) = \frac{\rho}{\pi} \int_0^\pi \frac{\sin\theta(t)}{\int_0^t \sin\theta(u)\,\mathrm{d}u} \log\left|\frac{\sin\frac{1}{2}(s+t)}{\sin\frac{1}{2}(s-t)}\right| \mathrm{d}t \tag{2.4}$$

coincides with Nekrasov's integral equation for extreme waves when $\rho = 1/3$ and has the explicit (and in fact unique) solution $\theta_1^\star(s) = (\pi - s)/2$ when $\rho = 1$. Plotnikov & Toland showed that equation (2.4) has a continuum $\mathcal{C} = \{(\rho, \theta_\rho^\star)\}_{\rho\in[1/3,1]}$ of solutions containing $\theta_1^\star(s)$ at $\rho = 1$ and an extreme wave $\theta_{1/3}^\star$ at $\rho = 1/3$. The solution $\theta_1^\star$ clearly has the desired convexity property that $\theta^{\star\prime}(s) < 0$ for each $s \in [0, \pi]$, and a homotopy argument asserts that this property is shared by every solution in $\mathcal{C}$, in particular by $\theta_{1/3}^\star$.

2.2 Babenko's pseudodifferential equation

A new chapter in the study of Stokes waves was opened by the discovery that the hydrodynamic problem can be reduced to the single pseudodifferential equation

$$\mathcal{C}w' = \lambda w + \lambda w\mathcal{C}w' + \lambda\mathcal{C}(ww') \tag{2.5}$$

for a 2π-periodic function w of a single variable, in which $\mathcal{C}$ denotes the Hilbert transform and $\lambda = g\Lambda/\pi c^2$ is the reciprocal of the physical parameter termed the *Froude number* for the flow. This equation is the Euler-Lagrange equation for critical points of the functional

$$J_\lambda(u) = \int_{-\pi}^{\pi} \left\{\frac{1}{2}\lambda u^2(1 + \mathcal{C}u') - \frac{1}{2}u\mathcal{C}u'\right\} \mathrm{d}t,$$

on $H^1_{\mathrm{per}}(-\pi, \pi)$; any solution in $H^1_{\mathrm{per}}(-\pi, \pi) \cap \{u : u(t) < 1/(2\lambda),\ t \in \mathbb{R}\}$ is real analytic, satisfies $1 + \mathcal{C}u' > 0$ and defines a solution of Nekrasov's equation (2.3) via the formulae

$$\theta = \frac{-u'}{1 + \mathcal{C}u'}, \qquad \nu = \frac{3\lambda}{(1 - 2\lambda u(0))^{3/2}}.$$

Equation (2.5) was first derived by Babenko [3] and has been exploited in a new existence theory for Stokes waves due to Buffoni, Dancer & Toland [4, 5, 6]; this theory constitutes a local, global and subharmonic bifurcation theory for the equation

$$G(w,\lambda) := \mathcal{C}w' - \lambda w - \lambda w\mathcal{C}w' - \lambda\mathcal{C}(ww') = 0, \qquad (w,\lambda) \in H^1_{\mathrm{per,e}}(-\pi,\pi)\times(0,\infty), \tag{2.6}$$

where the subscript 'e' refers to even functions.

It is a straightforward exercise to show that $\mathrm{d}_1 G[0,1]$ is a Fredholm operator of index 0 which has a simple zero eigenvalue (its kernel is spanned by the function $\cos t$). According to standard local bifurcation theory a branch $\Gamma_1 = \{(u^1_s, \lambda^1_s) : s \in (-1,1)\}$ of small-amplitude solutions to (2.6) emerges from $(u_0, \lambda_0) = (0,1)$; in fact a symmetric, subcritical pitchfork bifurcation takes place. The following global bifurcation result asserts that the portion of Γ_1 to the right of the primary bifurcation point extends to a global solution branch; the result is proved by an application of real-analytic global bifurcation theory (Dancer [17, 19]).

Theorem 2 (Real-analytic global bifurcation theory for Stokes waves). *The pseudodifferential equation (2.6) admits a global solution branch $\mathcal{H}_1$ with the following properties.*

1. *$\mathcal{H}_1$ is a continuous graph $(u_s, \lambda_s) = h(s)$, $s \in (0,\infty)$ with $\lim_{s\to 0} h(s) = (1,0)$ and $0 < \lambda_{\min} \le \lambda_s \le \lambda_{\max}$; it may have both self-intersections and cusps.*

2. *Each solution (u_s, λ_s) is 2π-periodic, even, non-increasing on $[0,\pi]$ and satisfies*

$$\max_{t\in[-\pi,\pi]} u_s(t) = u_s(0) < 1/(2\lambda_s),$$

   so that it is real analytic.

3. *$\lim_{s\to\infty} u_s$ is an extreme wave.*

4. *The branch itself consists of a countable number of real analytic arcs*

$$\mathcal{A}_j = \{u^{(j)}_s, (\lambda^{(j)}_s) = h^{(j)}(s),\ s \in (s^{(j)}_{\min}, s^{(j)}_{\max})\}$$

   which lie in the set $S = \{(u,\lambda) : G(u,\lambda) = 0,\ \mathrm{d}_1 G[u,\lambda]$ is invertible$\}$ of regular solutions and do not self-intersect; the first arc $\mathcal{A}_0$ contains the local branch $\Gamma_1 \cap \{s > 0\}$. Moreover, at the 'vertices' of the arcs which lie in $\bar{S}$, the branch admits a locally analytic reparameterisation.

Observe that $G(u,\lambda)$ in fact has bifurcation points at $(0,q)$ for each $q \in \mathbb{N}$, and the above local and global bifurcation results can therefore also be applied at these points to obtain further local and global solution branches Γ_q, $\mathcal{H}_q$, $q = 2,3,\ldots$; the solutions on on $\mathcal{H}_q$ give rise to 2π-periodic solutions whose minimal period is actually $2\pi/q$. A straightforward scaling argument shows that $(u_{(q)}, q\lambda)$ is a solution of $G(u,\lambda) = 0$, where $u_{(q)}(t) = q^{-1}u(qt)$, whenever (u,λ) is a solution. It follows that $\{(q\lambda^1_s, w^1_{s(q)}) : s \in (-1,1)\}$ is a solution branch passing through $(q,0)$, so that Γ_q is actually obtained from Γ_1 using the rescaling formula $\Gamma_q = \{(q\lambda^1_s, w^1_{s(q)}) : s \in (-\delta_q, \delta_q)\}$. In fact it is possible to strengthen this result

by showing that, for sufficiently small s, independent of q, the operator $\partial_2 F(q\lambda_s^1, w_{s(q)}^1)$ is invertible. It follows that Γ_q can be extended to $\{(q\lambda_s^1, w_{s(q)}^1) : s \in (-\delta, \delta)\}$, where δ does not depend upon q, so that each Γ_q, $q \geq 2$ is obtained from Γ_1 by scaling in a uniform fashion. It is natural to ask if the rescaled global branch $\{(q\lambda_s^1, w_{s(q)}^1) : s \in (0, \infty)\}$ likewise coincides with $\mathcal{H}_q$ (see below).

Secondary bifurcation means bifurcation of a branch of 2π-periodic solutions from $\mathcal{H}_1$. A result of Kielhöfer [32] for real-analytic equations with a gradient structure asserts that a change in the Morse index $i(s)$ of J_{λ_s} at $w_{s^\star}$ implies a secondary bifurcation from the branch $\mathcal{H}_1$ at $h(s^\star)$ provided that λ_s is injective in a neighbourhood of $s^\star$ (that is $h(s^\star)$ is not a turning point of $\mathcal{H}_1$). Plotnikov [48] has shown that $\limsup_{s\to\infty} i(s) = \infty$, and it follows that there are infinitely many positive values of s (necessarily in $h^{-1}(\bar{S} \setminus S)$ at which $h(s)$ is a secondary bifurcation point or a turning point. The numerical evidence indicates that only turning points occur (see Chen & Saffman [12]), but no rigorous proof of this fact is currently available. (Chen & Saffman's results also predict that secondary bifurcations (of $2q\pi$-periodic waves) do occur from the branches $\mathcal{H}_q$, $q \geq 2$.)

Subharmonic bifurcation theory deals with waves which are $2q\pi$-periodic for some $q \geq 2$ (and are demonstrably 2π-periodic); the corresponding bifurcation problem is set up in terms of an operator $F^{(q)}(u, \lambda)$ and functional $J_\lambda^{(q)}(u)$ which are defined in the same way as F and J_λ with $2q\pi$-periodic functions, integration over $(-q\pi, q\pi)$ and the Hilbert transform $\mathcal{C}_q$ for $2q\pi$-periodic functions. Buffoni, Dancer & Toland show that for each sufficiently large value of q there exists a value of s in $h^{-1}(S)$ at which the Morse index $i^{(q)}(s)$ of $J_{\lambda_s}^{(q)}$ at $h(s)$ changes. Kielhöfer's bifurcation theory shows that a solution of period $2q\pi$ bifurcates from $\mathcal{H}_1$ at the point $h(s)$; this solution cannot be 2π-periodic because $h(s) \in S$ and therefore emerges in a subharmonic bifurcation (with minimal period $2q\pi$ if q is prime).

Theorem 3 (Secondary and subharmonic bifurcation theory for Stokes waves).

1. *There are infinitely many points on the global branch $\mathcal{H}_1$ which are either turning points or secondary bifurcation points.*

2. *For each sufficiently large value of q there exists a point on $\mathcal{H}_1$ from which a solution of period $2q\pi$ emerges in a subharmonic bifurcation.*

This result offers several corollaries. Firstly, the global solution branch $\mathcal{H}_n$ is not obtained from $\mathcal{H}_1$ by rescaling: a subharmonic bifurcation of minimal period $2q\pi$ from $\mathcal{H}_1$ would correspond to a secondary bifurcation (of a 2π-periodic solution) from $\mathcal{H}_q$ at a point where $\mathrm{d}G[u, \lambda]$ is invertible. Secondly, no subharmonic bifurcations occur on Γ_1, since a subharmonic bifurcation of a solution with minimal period $2q\pi$ from a point of Γ_1 would define by rescaling a secondary bifurcation of a 2π-periodic solution from a point of Γ_q. Finally, we are able to refute a conjecture made by Levi-Cività, namely that the minimal Froude number $\pi c^2/g\Lambda$ of a periodic water wave with minimal period 2Λ is not less than unity: the minimal Froude number of a wave with minimal dimensionless period $2q\pi$ arising in a subharmonic bifurcation from $(u_s, \lambda_s) \in \mathcal{H}_1$ is $(q\lambda_s)^{-1}$, and this number is bounded above by $(q\lambda_{\min})^{-1}$, which can be made arbitrary small.

2.3 Further results

The above theory for Stokes waves has been extended in several directions, most notably to include the effects of *capillarity* and of *vorticity*. Jones & Toland [30] introduced and studied a version of Nekrasov's equation for periodic gravity-capillary waves which has become the basis for a large number of analytical and numerical existence theories revealing a much more complex local and global bifurcation picture than that for pure gravity waves. A comprehensive survey of current results in this area is given by Okamoto & Shoji [44]. The mathematical problem for *rotational* Stokes waves is rather different. A velocity potential is not available and the stream function Ψ (which is again even and 2Λ-periodic in x) satisfies the semilinear equation

$$-\nabla\Psi = F(\Psi) \qquad \text{in } D_\eta$$

together with the nonlinear boundary conditions (2.1) and asymptotic condition $\nabla\Psi \to (0, -c)$ as $y \to -\infty$ (uniformly in x); here the *vorticity function* F specifies the distribution of vorticity in the flow.

The fluid domain of a rotational wave motion satisfying $\Psi_y < 0$ can be conveniently mapped to the upper half-plane by interchanging the roles of Ψ and y as dependent and independent variables, so that $y = y(x, \Psi)$ in $\{(x, \Psi) : \Psi > 0\}$. Carrying out this transformation, one finds that y satisfies a quasilinear elliptic equation in the upper half-plane and a fully nonlinear boundary condition on the real axis, and the analysis of this boundary-value problem is clearly more involved that that of its irrotational counterpart, where helpful re-formulations such as Nekrasov's or Babenko's equation can be exploited. Nevertheless a global existence theory for a general class of vorticity functions has recently been presented by Constantin & Strauss [13, 14] (in fact for the finite-depth case). Their result is the rotational counterpart of Keady & Norbury's theory for irrotational Stokes waves: degree-theoretical methods demonstrate that there is a connected global solution branch consisting of even, symmetric waves whose free-surface profile strictly decreases between their one crest and one trough in each period. Each wave motion satisfies $\Psi_y < 0$ and there is a sequence of solutions (η_n, Ψ_n) such that $\max_{(x,y)\in\bar{D}_\eta} \Psi_{ny}(x, y) \to 0$. A summary of previous work on rotational Stokes waves is also presented in this reference.

3 Spatial dynamics

The phrase 'spatial dynamics' refers to an approach where a system of partial differential equations governing a physical problem is formulated as a (typically ill-posed) evolutionary equation

$$u_\xi = L(u) + N(u), \tag{3.1}$$

in which an unbounded spatial coordinate plays the role of the time-like variable ξ. The method, which was introduced by Kirchgässner [33], has become the basis for a wide range of problems in the applied sciences and has proved particularly fruitful in the study of local bifurcation phenomena for two-dimensional steady water waves. This physical problem has one bounded or semi-bounded coordinate, namely the vertical direction; by contrast no restriction is placed upon the behaviour of the waves in the horizontal direction, and so this coordinate qualifies as 'time-like'. We study the problem using spatial dynamics by

formulating it as an evolutionary system of the form (3.1), where ξ is the horizontal spatial coordinate, in an infinite-dimensional phase space consisting of functions of the vertical coordinate. This task is readily accomplished in Levi-Cività's formulation, where $\Phi \in \mathbb{R}$ and $\Psi \in (-\infty, 0)$ are respectively the horizontal and vertical coordinates. Introducing the new variable $\gamma = \rho|_{\Psi=1}$, we find from (2.2) and the Cauchy-Riemann equations for ρ and σ that

$$\rho_\Phi = \sigma_y, \tag{3.2}$$

$$\sigma_\Phi = -\rho_y, \tag{3.3}$$

$$\gamma_\Phi = \frac{g}{c^3} \mathrm{e}^{-3\gamma} \sin \sigma|_{\Psi=1} \tag{3.4}$$

with the boundary conditions that $\rho, \sigma \to 0$ as $\Psi \to -\infty$ and $\gamma = \rho|_{\Psi=1}$. Equations (3.2)–(3.4) constitute an evolutionary equation for the variable $u = (\rho, \sigma, \gamma)$ in the phase space $\{(\rho, \sigma, \gamma) \in L^2(-\infty, 0) \times L^2(-\infty, 0) \times \mathbb{R}\}$, where the domain of the vector field on the right-hand side is $\{(\rho, \sigma, \gamma) \in H^1(-\infty, 0) \times H^1(-\infty, 0) \times \mathbb{R} : \gamma = \rho|_{y=1}\}$. Spatial dynamics formulations for the finite-depth case and for capillary-gravity steady waves in a finite- or infinite-depth setting can similarly be obtained from the Levi-Cività coordinates for those problems, and in fact a host of different choices of variables is available (see Groves & Toland [25] for a choice which is closely connected to the original physical variables and has proved extremely useful in existence theories due to its favourable functional-analytic aspects).

The methods used to find solutions of (3.1) depend heavily upon the characteristics of the vector field appearing in the equation, which are in turn determined by the particular problem being studied. One particularly useful technique is known as *centre-manifold reduction*. It is well known that a finite-dimensional dynamical system whose linear part has purely imaginary eigenvalues admits an invariant manifold called the *centre manifold* which contains all its small, bounded solutions; the dimension of the centre manifold is given by the number of purely imaginary eigenvalues (e.g. see Vanderbauwhede [55]). Under certain additional hypotheses this result also holds for infinite-dimensional evolutionary systems whose linear part has a finite number of purely imaginary eigenvalues. In these circumstances it is therefore possible to show that the original problem is locally equivalent to a system of ordinary differential equations whose solution set can, in theory, be analysed. This reduction procedure is explained in detail by Mielke [40] and Vanderbauwhede & Iooss [56] (see in particular §§4–5 in the latter reference for introductory examples and applications), and is applicable to the two-dimensional gravity-capillary water-wave problem for fluid of finite depth.

An important aspect of the centre-manifold reduction procedure is the fact that it preserves symmetries of the initial evolutionary equation. The spatial dynamics formulation of a conservative problem typically admits a Hamiltonian structure, while that of an isotropic physical problem is typically reversible, and this Hamiltonian structure or reversibility is inherited by the reduced system on a centre manifold. Other discrete or continuous symmetries of the original physical problem are likewise reflected in symmetries of the reduced vector field. This feature can be exploited in existence theories for water waves: since the physical problem is conservative and isotropic, its spatial dynamics formulation is Hamiltonian and reversible, and the reduced system on a centre manifold is a reversible Hamiltonian system with finitely many degrees of freedom.

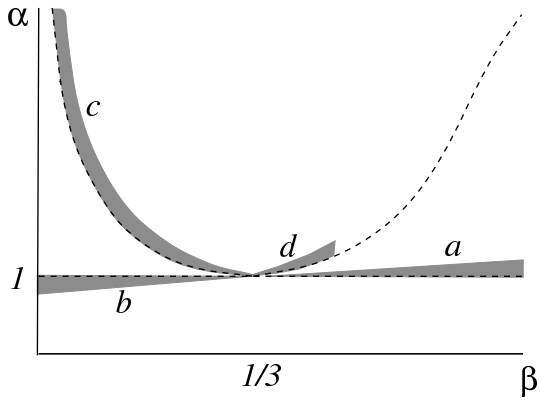

Bifurcation curves in the (β, α)-plane; the shaded regions indicate the parameter regimes in which homoclinic bifurcation is detected.

A solitary wave of depression (left) is found in region (a), while a generalised solitary wave of elevation (right) is found in region (b).

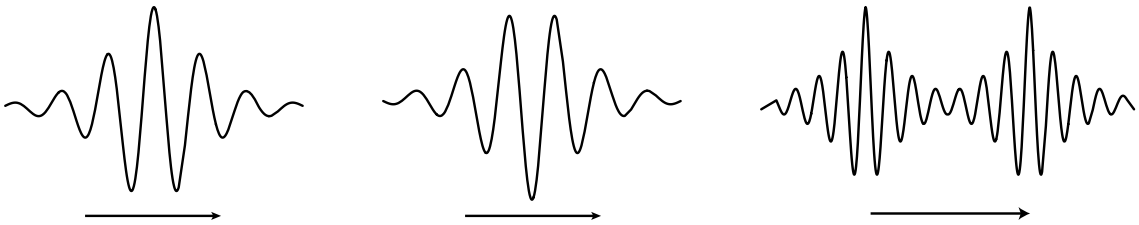

Symmetric unipulse modulated solitary waves (left and centre) co-exist with an infinite family of multipulse modulated solitary waves (right) in region (c).

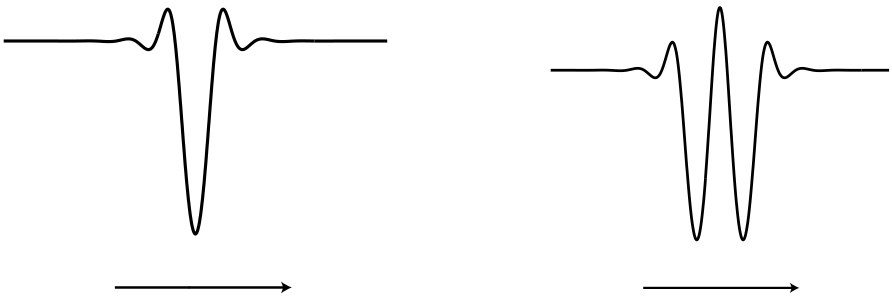

Region (d) contains an infinite family of multi-troughed solitary waves which decay in an oscillatory fashion.

Figure 2. *Summary of the solitary and generalised solitary waves whose existence has been deduced by spatial dynamics methods allied with homoclinic bifurcation theory; the arrows denote the direction of wave propagation.*

Bifurcation phenomena obtained by varying a parameter can also be captured by the centre-manifold reduction procedure. A bifurcation parameter ϵ may be introduced by perturbing physical parameters present in the problem around fixed reference values, and the reduction procedure delivers an ϵ-dependent manifold which captures the small-amplitude dynamics for small values of this parameter; the manifold is a true centre manifold at criticality ($\epsilon = 0$), so that its dimension is the number of purely imaginary eigenvalues of the relevant linear operator at $\epsilon = 0$. The reduction procedure is therefore especially helpful in detecting bifurcations which are associated with a change in the number of purely imaginary eigenvalues. Kirchgässner [34, Fig. 1] showed that there are four critical curves in the (β, α)-parameter plane at which the number of purely imaginary eigenvalues changes, and in fact each of these regions is associated with *homoclinic bifurcation*, where solutions of the reduced system which are asymptotically zero or periodic bifurcate from the trivial solution (see below). The parameters in question here are defined by $\beta = T/ch^2$ and $\alpha = c^2/gh$, and Figure 2 illustrates the regions of (β, α)-parameter space in which homoclinic bifurcation takes place.

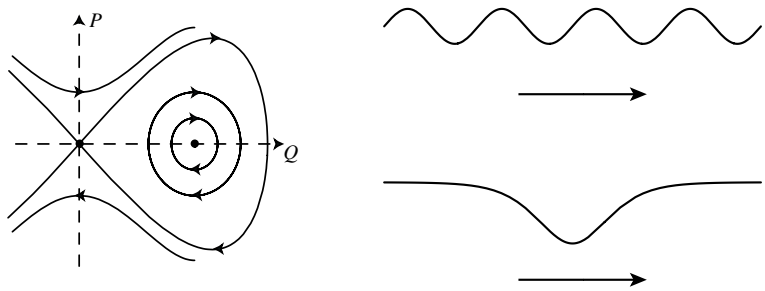

Figure 3. *The behaviour in 'time' of solutions to the reduced dynamical system determines the wave profile in the horizontal direction, so that periodic and homoclinic solutions generate respectively periodic wave trains and solitary waves (from top).*

Spatial dynamics techniques were first applied to the steady gravity-capillary water-wave problem by Kirchgässner [34], who studied the parameter regime $\alpha = 1 + \epsilon$, $\beta > 1/3$ for $0 < \epsilon \ll 1$ (region (a) in Figure 2). A *Hamiltonian* 0^2*-resonance* takes place at $\epsilon = 0$, that is two imaginary eigenvalues collide at the origin and become real as ϵ is varied upwards through zero. The centre manifold is two-dimensional, and in terms of suitable scaled independent and dependent variables one finds that the reduced dynamical system is

$$\begin{aligned} Q_X &= P + \mathcal{R}_1(Q, P, \epsilon), \\ P_X &= Q + \frac{3}{2}Q^2 + \mathcal{R}_1(Q, P, \epsilon), \end{aligned}$$

in which the remainder terms $\mathcal{R}_1$ and $\mathcal{R}_2$ are $O(\epsilon^{1/2})$ and respectively odd and even in their second arguments. It is a straightforward exercise to sketch the phase portrait of this dynamical system for $\epsilon = 0$ (see Fig. 3), and since the system is Hamiltonian and reversible, elementary transversality arguments show that its phase portrait is qualitatively the same for small, positive values of ϵ. The phase portrait reveals the existence of periodic and homoclinic solutions, which correspond to respectively *periodic wave trains* (the equivalent of Stokes waves in the present setting) and *solitary waves* (steady waves with a pulse-like in

the direction of propagation). Further qualitative details of the corresponding water waves are obtained by tracing back the various changes of coordinates; one finds for example that the homoclinic solution in this parameter regime yields to a solitary wave of depression.

Further investigations using spatial dynamics were carried out by Iooss & Kirchgässner [27], who studied homoclinic bifurcation associated with the *Hamiltonian-Hopf bifurcation.* Iooss & Kirchgässner identified a critical curve in the (β, α)-parameter place at which two pairs of purely imaginary eigenvalues collide at non-zero points $\pm \mathrm{i}s$ and become complex. The centre manifold is four-dimensional at such Hamiltonian-Hopf points, and the two-degree-of-freedom reduced Hamiltonian system is conveniently studied using complex coordinates (A, B) and a normal-form transformation. Introducing a bifurcation parameter ϵ so that positive values of ϵ correspond to points on the 'complex' side of the bifurcation curve (region (c) in Figure 2), one obtains the reduced Hamiltonian system

$$A_\xi = \frac{\partial H}{\partial \bar{B}}, \qquad B_\xi = -\frac{\partial H}{\partial \bar{A}},$$
$$H = \mathrm{i}s(A\bar{B} - \bar{A}B) + |B|^2 + H_{\mathrm{NF}}(|A|^2, \mathrm{i}(A\bar{B} - \bar{A}B), \epsilon) + \mathcal{R}(A, B, \epsilon),$$

where H_{NF} is a real polynomial which satisfies $H_{\mathrm{NF}}(0, 0, \epsilon) = 0$; it contains the terms of order $3, \ldots, N+1$ in the Taylor expansion of H. The 'truncated normal form' obtained by neglecting the remainder term $\mathcal{R}$ is completely integrable (H and $A\bar{B} - \bar{A}B$ are conserved quantities) and invariant under the rotation $(A, B) \mapsto (A\mathrm{e}^{\mathrm{i}\theta}, B\mathrm{e}^{\mathrm{i}\theta})$, $\theta \in \mathbb{R}$; for $\epsilon > 0$ it admits a circle of homoclinic solutions related by rotation, and an application of the implicit-function theorem shows that two of these solutions persist when the remainder terms are reinstated. The corresponding water waves are symmetric solitary waves which take the form of periodic wave trains modulated by exponentially decaying envelopes. Buffoni & Groves [7] showed that there are in fact infinitely many homoclinic solutions which resemble multiple copies of Iooss & Kirchgässner's solutions. These *multipulse* homoclinic solutions are obtained as critical points of an action functional associated with the above Hamiltonian system. Their proof is obtained by an argument in which several copies of a 'primary' homoclinic orbit are 'glued' together to produce a multipulse homoclinic orbit; the existence of the latter is confirmed by topological methods which use the variational structure of the problem (and in particular mountain-pass arguments) in a crucial way. Homoclinic bifurcation associated with the Hamiltonian-Hopf bifurcation also occurs for fluid of infinite depth (Iooss & Kirrmann [29]). In this situation a centre-manifold reduction is not available, although a theory based upon a normal form and persistence arguments again yields the existence of two symmetric modulated solitary waves (which decay algebraically to zero at infinity).

Multipulse homoclinic bifurcation has also been discussed by Buffoni, Groves & Toland [8], who studied a different parameter regime and a different bifurcation mechanism. They examined bifurcation near a critical curve at which two pairs of real eigenvalues collide and become complex. On the 'complex' side of the bifurcation curve (region (d) in Figure 2) the centre manifold is four-dimensional and controlled to leading order by the Hamiltonian equation

$$u'''' + (-2 + \epsilon)u'' + u - u^2 = 0, \qquad 0 < \epsilon \ll 1.$$

This equation has a transverse homoclinic orbit (an orbit arising due to a transverse intersection of the two-dimensional stable and unstable manifolds of the zero equilibrium in

the zero energy surface), and hence exhibits *chaotic behaviour:* there is a Smale-horseshoe structure in its solution set (Devaney [20]). It consequently has an infinite family of multi-pulse homoclinic solutions; the corresponding water waves are solitary waves of depression with $2, 3, 4, \ldots$ large troughs separated by $2, 3, \ldots$ small oscillations, and their oscillatory tails decay exponentially to zero.

A different homoclinic bifurcation phenomenon was discovered by Iooss & Kirchgässner [28] in the parameter regime $\alpha = 1 + \epsilon$, $\beta > 1/3$ for $0 < \epsilon \ll 1$ (region (b) in Figure 2). A *Hamiltonian* $0^2 \mathrm{i}\omega$ *resonance* takes place at $\epsilon = 0$, that is two imaginary eigenvalues collide at the origin and become real as ϵ is varied downwards through zero, while a second pair of eigenvalues remains on the imaginary axis. The reduction procedure yields a two-degree-of-freedom Hamiltonian system, to which Iooss & Kirchgässner applied normal-form techniques. At each order the 'truncated normal form' admits two invariant planes which contain respectively periodic orbits circling the origin and a homoclinic orbit connecting the origin with itself. The persistence question for this homoclinic orbit is however difficult to settle because of the geometry of the phase space near the origin: the stable and unstable manifolds are both one-dimensional, and the existence of a homoclinic orbit would require these manifolds to intersect in the three-dimensional zero energy surface. A similar argument shows that homoclinic connections to periodic orbits are rather to be expected, and Iooss & Kirchgässner indeed show that there is a family of such homoclinic orbits parameterised by the amplitude of the periodic solutions at infinity; this amplitude is subject to a lower bound which is algebraically small in the bifurcation parameter. The corresponding water waves are called *generalised solitary waves*; their pulse-like profile decays to a periodic ripple at infinity.This result has been extended by several authors, notably by Lombardi [37], who has shown that the lower bound on the amplitude of the periodic ripples at infinity can in fact be made exponentially small in the bifurcation parameter. It is still an open question whether genuine solitary waves exist in this parameter regime, although Sun [52] has recently proved that they do not exist for values of β close to $1/3$ and there is strong numerical evidence that the same is true for all values of $\beta < 1/3$ (Champneys *et al* [10]).

4 Three-dimensional steady waves

The last five years have seen a wealth of new existence results for the previously almost untouched three-dimensional steady gravity-capillary water-wave problem. They are all variational in nature, but can be divided into two categories. The mathematical cornerstone of the first is a variational Lyapunov-Schmidt method, while the second consists of an extension of the spatial dynamics methods described in Section 3 above. They yield respectively doubly periodic surface waves and a range of spatially unbounded wave patterns.

4.1 Doubly periodic waves

A small-amplitude existence theory for *doubly periodic* steady gravity-capillary water waves was recently given by Craig & Nicholls [15]. Their construction yields doubly periodic waves with arbitrary fundamental domain Γ and supersedes a previous result by Reeder & Shinbrot [50], who prove the existence of a doubly periodic steady wave whose

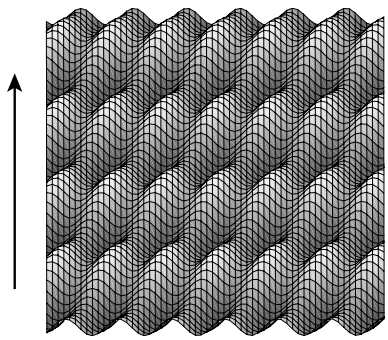

Figure 4. *A doubly periodic steady wave exhibiting a typical 'hexagonal' pattern.*

fundamental domain is a 'symmetric diamond'. Craig & Nicholls's existence theory is based upon the observation by Zakharov [57] that the free surface elevation $\eta(x,z,t)$ and Dirichlet data at the free surface $\xi(x,z,t) = \phi(x,\eta(x,z,t),z,t)$ completely determine the wave motion, and indeed η and ξ are canonically conjugate variables for a Hamiltonian formulation of the time-dependent water-wave problem (1.1)–(1.4). This Hamiltonian formulation was expressed more conveniently by Craig & Sulem [16] as

$$\eta_t = \frac{\delta H}{\delta \xi}, \qquad \xi_t = -\frac{\delta H}{\delta \eta},$$

where the Hamiltonian $H(\eta,\xi)$ is defined by

$$H(\eta,\xi) = \int_\Gamma \left\{ \frac{1}{2}\xi G(\eta)\xi + \frac{1}{2}g\eta^2 + T(\sqrt{1+\eta_x^2+\eta_z^2}-1) \right\} \mathrm{d}x\,\mathrm{d}z,$$

$G(\eta)$ is the Dirichlet-Neumann operator defined by $G(\eta)\xi = \nabla\phi.(-\eta_x,-\eta_z,1)|_{y=\eta}$ and the potential function ϕ is the harmonic extension of ξ into D_η with Neumann data at $y=-h$. There is a variational principle for steady water waves associated with this formulation, namely that steady waves are critical points of $H(\eta,\xi)$ subject to fixed values of the two impulse functionals

$$I_1(\eta,\xi) = \int_\Gamma \eta\xi_x\,\mathrm{d}x\,\mathrm{d}z, \qquad I_2(\eta,\xi) = \int_\Gamma \eta\xi_z\,\mathrm{d}x\,\mathrm{d}z;$$

the wave speeds c_1 and c_2 are the Lagrangian multipliers in the variational principle

$$\delta(H - c_1 I_1 - c_2 I_2) = 0.$$

Observe that H, I_1 and I_2 are invariant under the torus action $T_{\alpha_1,\alpha_2}(\eta(x,z),\xi(x,z)) = (\eta(x+\alpha_1,z+\alpha_2),\xi(x+\alpha_1,z+\alpha_2))$, so that any critical point belongs to a torus of critical points.

The above variational principle does not appear to be amenable to the direct methods of the calculus of variations in any reasonable function space; its framework is however analogous to the situation encountered in the proof of the Lyapunov centre theorem by Moser [41]. There one seeks periodic solutions of a finite-dimensional Hamiltonian system near an elliptic equilibrium. Such solutions are characterised as critical points of an action

functional subject to fixed values of the averaged Hamiltonian; the unknown period is the Lagrange multiplier and all critical points are members of a sphere of critical points due to autonomy. This variational principle is also not amenable to the direct methods, but nevertheless one can use the Lyapunov-Schmidt method to reduce Hamilton's equations to a finite-dimensional system of bifurcation equations, solutions of which are critical points of a corresponding reduced variational principle. Craig & Nicholls apply this strategy to the above variational principle for steady water waves.

The crucial ingredients are the specification of the function space in which the equations $\delta(H - c_1 I_1 - c_2 I_2) = 0$ are to be considered, for which purpose a precise description of the mapping properties of $G(\eta)$ in appropriate Sobolev spaces is required, and a proof that the kernel of the linearised equations is finite-dimensional. This fact is readily understood in terms of the physics of the underlying problem. Representing doubly periodic functions as Fourier series, one can show that a zero eigenvalue occurs whenever the wave number $k = (k_1, k_2)$ and wave velocity $c = (c_1, c_2)$ satisfy the classical dispersion relation

$$\Delta(c, k) = (g + T|k|^2)|k| \tanh(|k|h) - (c.k)^2 = 0.$$

For fixed c_0, each solution k_0 of $\Delta(c_0, k) = 0$ leads to a zero eigenvalue, and clearly such values of k occur in pairs $\pm k_0$. The nullity of the linear operator is therefore twice the number N of solutions $\{k_1, \ldots, k_N\}$ of $\Delta(c_0, k) = 0$ which are normalised such that $k.c_0 = 0$, and one easily finds that $2 \leq N < \infty$. (The fact that $T > 0$ is crucial in this respect; in the case $T = 0$ (gravity waves) the kernel of the linear operator is infinite-dimensional, and existence theories for doubly periodic gravity waves are therefore likely to encounter small-divisor problems. This observation has already been made in a short note by Plotnikov [45], and although Plotnikov gave a sketch of an existence proof for doubly periodic steady gravity waves using superconvergence methods this problem remains essentially open.)

Having applied Moser's reduction technique, we arrive at the reduced variational principle of finding the critical points of a smooth functional $\tilde{H}$ on a two-codimensional compact submanifold S of $2N$-dimensional real space; the problem is equivariant with respect to a torus action T_α. The fact that the quadratic part of the original Hamiltonian H is positive definite implies that S is given geometrically as the intersection of two ellipsoids, and we can this feature to conclude the existence of periodic orbits without considering the nonlinear problem in detail. When $N = 2$ the set S is homeomorphic to a two-dimensional torus and the orbit under T_α of any point of S is the whole of S, so that $\tilde{H}|_S$ is constant and has one T_α-equivariant critical point. The 'symmetric diamond' solution of Reeder and Shinbrot is a special case with $k_1 = (\kappa, \ell)$, $k_2 = (\kappa, -\ell)$, $\kappa \neq \ell$. When $N > 2$ the set S is homeomorphic to the product of two spheres, and it follows that there are at least $\mathrm{ind}_{T_\alpha} S + 1$ distinct T_α-equivariant critical points of $\tilde{H}$ on S, where $\mathrm{ind}_{T_\alpha} S$ is a T_α-equivariant cohomological index of S. Craig & Nicholls show that it is always possible to choose the index so that $\mathrm{ind}_{T_\alpha} S = N - 2$.

Theorem 4 (Small-amplitude doubly periodic steady waves). *For any given fundamental domain Γ and values of g, T and h there exists a velocity $c = (c_1, c_2)$ and a nontrivial periodic steady wave with velocity c and fundamental domain Γ.*

4.2 Spatial dynamics

Hamiltonian spatial dynamics and centre-manifold reduction techniques have recently been extended to three-dimensional steady gravity-capillary surface waves on water of finite depth by Groves & Mielke [24] and Groves [21]. To describe these results, let us without loss of generality suppose that $c = (c, 0)$, so that x is the direction of wave propagation and z is the transverse spatial direction. Groves & Mielke consider waves which are periodic in z and use the longitudinal variable x as the time-like variable, while Groves considers waves which are periodic in the x-direction and uses the transverse variable z as the time-like variable. Both choices represent natural steps from two to three dimensions: the former includes all two-dimensional steady waves as special cases, while the latter facilitates a discussion of the 'dimension-breaking' phenomenon in which two-dimensional waves spontaneously lose their spatial inhomogeneity in the z-direction (see below). Of course we have the freedom to take *any* horizontal spatial coordinate as the time-like variable, and this observation has recently been explored in detail by Groves & Haragus [22]. They took the horizontal spatial direction X making an angle θ_1 with the positive x-axis as the time-like variable and considered waves which are periodic in the direction Z making an angle θ_2 with the positive x-axis (see Figure 5).

The spatial dynamics formulation is found by exploiting the observation that the hydrodynamic problem follows from the variational principle

$$\delta \iint \left(\int_{-1}^{\eta} (-\phi_x + \frac{1}{2}(\phi_x^2 + \phi_y^2 + \phi_z^2))\,\mathrm{d}y + \frac{1}{2}\alpha\eta^2 + \beta(\sqrt{1+\eta_x^2+\eta_z^2} - 1) \right) \mathrm{d}x\,\mathrm{d}z = 0,$$

where we have introduced dimensionless variables, so that α and β are Kirchgässner's parameters, and the variation is taken in (η, ϕ) (see Luke [38]). We proceed by seeking solutions of the form $\eta(x, z) = \eta(\xi, Z)$, $\phi(z, y, z) = \phi(\xi, y, Z)$, where $\xi = \sin\theta_2\, x - \cos\theta_2\, z$, $Z = \sin\theta_1\, x - \cos\theta_1\, z$ and η, ϕ are $2\pi/\nu$-periodic in Z, and using the change of variable

$$y = Y(1 + \eta(\xi, Z)) - 1, \qquad \phi(\xi, y, Z) = \Phi(\xi, Y, Z), \tag{4.1}$$

which transforms the variable fluid domain into the fixed domain $\{0 < y < 1\}$. In this fashion one obtains a new variational principle

$$\delta\mathcal{L} = 0, \qquad \mathcal{L} = \int_{-\infty}^{\infty} \left(\int_0^{2\pi/\nu} L(\eta, \Phi, \eta_\xi, \Phi_\xi)\,\mathrm{d}Z \right) \mathrm{d}\xi,$$

in which an explicit formula for the function L is obtained by a straightforward calculation (see Groves & Haragus [22, p. 408]).

Observe that the above variational principle takes the form of Hamilton's principle for an action functional in which ξ is the time-like variable, (η, Φ) are the coordinates and (η_ξ, Φ_ξ) the corresponding velocities. Following the classical theory, we take the Legendre transform and hence derive the (infinite-dimensional) Hamiltonian system

$$u_\xi = Lu + N(u), \tag{4.2}$$

where $u = (\eta, \Phi, \omega, \Psi)$, $\omega = \delta_{\eta_\xi}\mathcal{L}$, $\Psi = \delta_{\Phi_\xi}\mathcal{L}$ and δ denotes a variational derivative. The Legendre transform can be carried out explicitly, so that the relevant Hamiltonian system can also be computed explicitly. An integration by parts with respect to the vertical

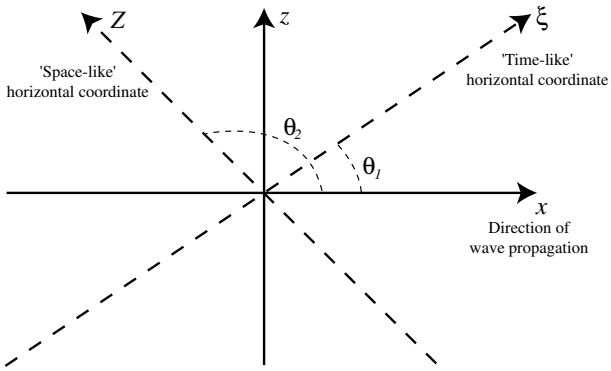

Figure 5. *Spatial dynamics for three-dimensional steady water waves: the waves are periodic in the 'space-like' direction Z, and the solution to the evolutionary equation determines their profile in the 'time-like' direction ξ.*

coordinate Y is required during this procedure, so that boundary conditions at $Y = 0$ and $Y = 1$ emerge, and the boundary condition at $Y = 1$ is in fact nonlinear. This difficulty is overcome by a change of variable which converts the Hamiltonian system into an equivalent Hamiltonian system with linear boundary conditions and to which the centre-manifold theory is applicable. The facts that the fluid has finite depth and that capillary effects are present are both essential here: the former ensures that the spectrum of the linear operator consists only of eigenvalues while the latter guarantees that only finitely many of these eigenvalues lie on the imaginary axis.

Having performed a centre-manifold reduction on the spatial dynamics formulation of our physical problem, we are confronted with the task of interpreting the solution set of the reduced system of ordinary differential equations. Figure 6 shows several examples of orbits in the phase space of the reduced system; the key to understanding the qualitative nature of the corresponding water waves is the observation that each point in the phase space corresponds to a wave which is periodic in the spatial direction Z, while the behaviour of a solution in 'time' determines the profile of the wave in the spatial direction ξ. According to this recipe, periodic solutions of the reduced system correspond to water waves which are periodic in the ξ-direction. Since these waves are also periodic in the Z-direction we obtain *doubly periodic* water waves (Figure 6(a)). Similarly, homoclinic solutions of the reduced system correspond to water waves whose profile in the ξ-direction decays to zero (that is, the undisturbed state of the water) as $\xi \to \pm\infty$; such waves are periodic in the Z-direction and have a solitary-wave profile in the ξ-direction (Figure 6(b)). Solutions which are homoclinic to periodic solutions (Figure 6(c)) likewise correspond to water waves which are periodic in the Z-direction and have a generalised solitary-wave profile in the ξ-direction.

The above results are obtained by applying nonlinear bifurcation theories for dynamical systems to the reduced Hamiltonian system on the centre manifold. Periodic solutions to the evolutionary equation (4.2) are obtained using the classical Lyapunov centre theorem, and it is possible to recover Theorem 4 on doubly periodic water waves in Section 4.1 above in this fashion. Homoclinic bifurcation is detected by identifying points in the relevant parameter space at which for example Hamiltonian-Hopf or $0^2 i\omega$ resonances take

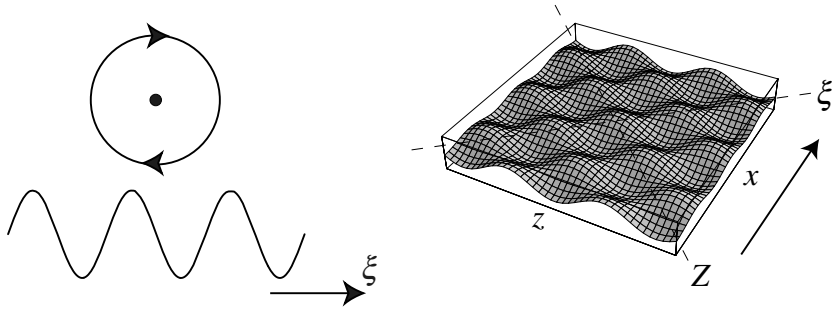

A periodic solution of the reduced system (above left) generates a wave which is periodic in the ξ-direction (below left); the free surface is also periodic in the Z-direction (right).

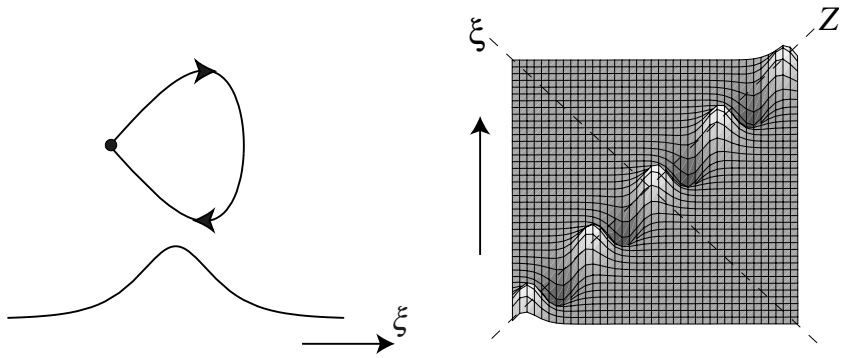

A homoclinic solution of the reduced system (above left) generates a wave with a solitary-wave profile in the ξ-direction (below left); the free surface is also periodic in the Z-direction (right).

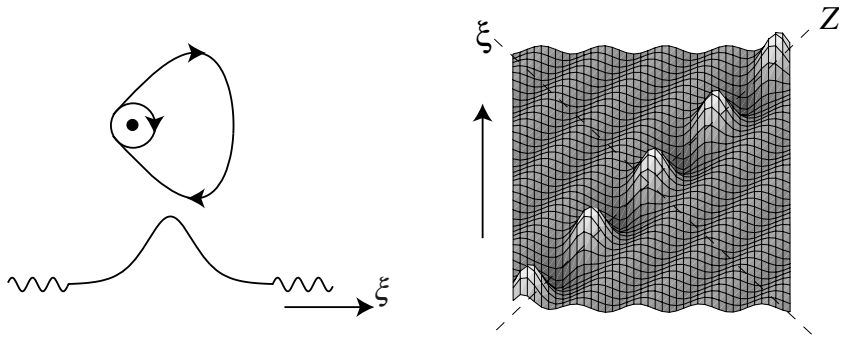

A solution to the reduced system which is homoclinic to a periodic orbit (above left) generates a wave with a generalised solitary-wave profile in the ξ-direction (below left); the free surface is also periodic in the Z-direction (right).

Figure 6. *Interpreting solutions of the reduced system of equations*

place; rather exotic water waves can be obtained by applying the multipulse homoclinic bifurcation theory of Buffoni & Groves at Hamiltonian-Hopf points (see Figure 7). By varying the angles θ_1, θ_2, together with the physical parameters β, α and the frequency ν of the waves in the Z-direction, one can systematically compile a complete catalogue of bifurcation scenarios which are found in the dynamics of the reduced Hamiltonian system. The catalogue is extensive, containing virtually all bifurcations and resonances known in Hamiltonian systems theory. In this sense one can regard the present version of the water-wave problem as a paradigm for finite-dimensional Hamiltonian systems, and this observation has a significant consequence. There is a cornucopia of nonlinear bifurcation theories for finite-dimensional Hamiltonian systems, each associated with a particular bifurcation scenario. A wealth of existence theories for steady water waves can therefore be found by selecting a nonlinear bifurcation theory and applying it to the hydrodynamic problem via the reduced equations associated with the relevant bifurcation scenario.

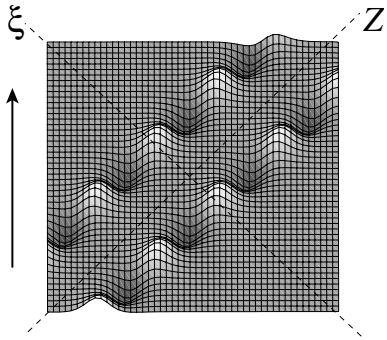

Figure 7. *This three-dimensional steady water wave is periodic in the Z-direction and has the profile of a multipulse solitary wave in the ξ direction.*

Let us conclude with an application of spatial dynamics due to Groves, Haragus & Sun [23] in which a complete reduction to a finite-dimensional problem is not possible. Consider a spatial dynamics formulation

$$u_z = Lu + N(u) \tag{4.3}$$

of the steady water-wave problem as a reversible Hamiltonian system in which z is the time-like variable. We study it in a phase space $\mathcal{X}$ of symmetric functions which decay to zero as $x \to \pm\infty$, so that all its solutions have symmetric solitary-wave profiles in the x-direction. In particular, equilibrium and periodic solutions of (4.3) correspond to respectively *line solitary waves* (which do not depend upon the transverse spatial coordinate z) and *periodically modulated solitary waves* (which are periodic in the transverse spatial coordinate z).

The line solitary wave found by Kirchgässner (see Section 3 above) as a solution of the two-dimensional water-wave problem clearly defines an equilibrium solution $u^\star$ to (4.3), and we may use a translation

$$u(z) = u^\star + w(z) \tag{4.4}$$

to obtain the new Hamiltonian system

$$w_z = L^\star w + N^\star(w). \tag{4.5}$$

The spectrum of $L^\star$ consists of two simple imaginary eigenvalues $\pm \mathrm{i}k_\epsilon$, where k_ϵ is $O(\epsilon)$, together with essential spectrum along the whole of the real axis. The presence of this essential spectrum rules out the use of centre-manifold theory which would, together with an application of the Lyapunov centre theorem to the reduced Hamiltonian system, yield the existence of a family of small-amplitude periodic solutions to (4.5). Iooss [26] has however recently established a version of the Lyapunov centre theorem for reversible systems in infinite-dimensional settings with spectrum of this kind (for which the nonresonance condition on the eigenvalues is violated at the origin due to the presence of essential spectrum). Groves, Haragus & Sun verified that the conditions in Iooss's theorem are satisfied by equation (4.5), which therefore has a family of periodic solutions with frequency of $O(\epsilon)$; a family of periodically modulated solitary water waves is obtained using formula (4.4). The result of this analysis is stated in Theorem 5 below; the line solitary wave is sketched in Figure 8 together with a typical member of the family of periodically modulated solitary waves.

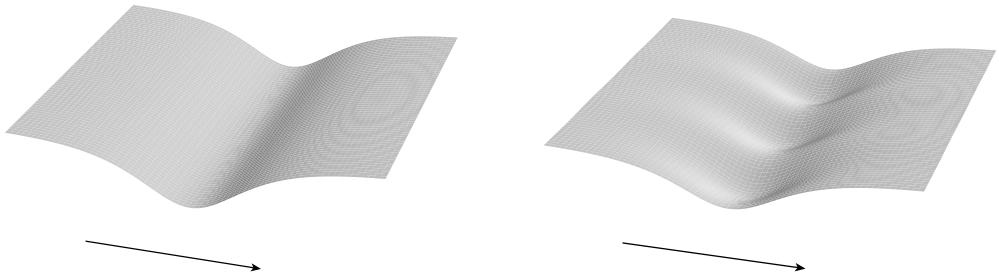

Figure 8. *The periodically modulated solitary wave on the right emerges from the line solitary wave on the left in a dimension-breaking bifurcation. The arrow indicates the direction of wave propagation.*

Theorem 5 (Dimension-breaking phenomenon). *Suppose that $\beta > 1/3$ and $\alpha = 1+\epsilon$. There exists a positive constant ω_0 in the interval $(0, 1/(4(\beta - 1/3))^{1/2})$ and, for each sufficiently small value of ϵ, a small neighbourhood $\mathcal{N}_\epsilon$ of the origin in $\mathbb{R}$ such that the following statements hold.*

1. *The hydrodynamic problem admits a line solitary-wave solution $(\eta^\star(x), \phi^\star(x,y))$, where*

$$\eta^\star(x) = -\epsilon \operatorname{sech}^2\left(\frac{\epsilon^{1/2}x}{2(\beta - 1/3)^{1/2}}\right) + O(\epsilon^2)$$

and $\eta^\star(-x) = \eta^\star(x)$ for all $x \in \mathbb{R}$. The quantities $\eta^\star$ and $\phi^\star$ decay exponentially to zero with exponential rate $\epsilon^{1/2}r^\star$ as $x \to \pm\infty$, where $r^\star$ is any real positive number strictly less than $(4(\beta - 1/3))^{-1/2}$.

2. *A family of periodically modulated solitary waves $\{(\eta_a(x,z), \phi_a(x,y,z))\}_{a\in\mathcal{N}_\epsilon}$ emerges from the above line solitary wave in a <u>dimension-breaking bifurcation</u>. Here*

$$\eta_a(x,z) = \eta^\star(x) + \epsilon\eta_a^\star(\epsilon^{1/2}x, z),$$

in which $\eta_a^\star(\cdot\,,\cdot)$ *has amplitude of* $O(|a|)$ *and is even in both arguments and periodic in its second argument with frequency* $\epsilon k_\epsilon + O(|a|^2)$*; the positive number* k_ϵ *satisfies* $|k_\epsilon - \omega_0| = O(\epsilon^{1/4})$.

References

[1] Amick, C. J. 1987 Bounds for water waves. *Arch. Rat. Mech. Anal.* **99**, 91–114.

[2] Amick, C. J., Fraenkel, L. E. & Toland, J. F. 1982 On the Stokes conjecture for the wave of extreme form. *Acta. Math.* **148**, 193–214.

[3] Babenko, K. I. 1987 Some remarks on the theory of surface waves of finite amplitude. *Sov. Math. Dokl.* **35**, 599–603.

[4] Buffoni, B., Dancer, E. N. & Toland, J. F. 1998 Sur les ondes de Stokes et une conjecture de Levi-Civita. *C. R. Acad. Sci. Paris, Sér. 1* **326**, 1265–1268.

[5] Buffoni, B., Dancer, E. N. & Toland, J. F. 2000 The regularity and local bifurcation of steady periodic water waves. *Arch. Rat. Mech. Anal.* **152**, 207–240.

[6] Buffoni, B., Dancer, E. N. & Toland, J. F. 2000 The sub-harmonic bifurcation of Stokes waves. *Arch. Rat. Mech. Anal.* **152**, 241–271.

[7] Buffoni, B. & Groves, M. D. 1999 A multiplicity result for solitary gravity-capillary waves in deep water via critical-point theory. *Arch. Rat. Mech. Anal.* **146**, 183–220.

[8] Buffoni, B., Groves, M. D. & Toland, J. F. 1996 A plethora of solitary gravity-capillary water waves with nearly critical Bond and Froude numbers. *Phil. Trans. Roy. Soc. Lond. A* **354**, 575–607.

[9] Byatt-Smith, J. G. 2001 Numerical solution of Nekrasov's equation in the boundary layer near the crest for waves near the maximum height. *Stud. Appl. Math.* **106**, 393–405.

[10] Champneys, A. R., Vanden-Broeck, J.-M. & Lord, G. J. 2002 Do true elevation gravity-capillary solitary waves exist? A numerical investigation. *J. Fluid Mech.* **454**, 403–417.

[11] Chandler, G. A. & Graham, I. G. 1993 The computation of water waves modelled by Nekrasov's equation. *SIAM J. Numer. Anal.* **30**, 1041–1065.

[12] Chen, B. & Saffman, P. G. 1980 Numerical evidence for the existence of new types of gravity wave of permanent form on deep water. *Stud. Appl. Math.* **62**, 1–21.

[13] Constantin, A. & Strauss, W. 2002 Exact periodic traveling water waves with vorticity. *C. R. Acad. Sci. Paris, Sér. 1* **335**, 797–800.

[14] Constantin, A. & Strauss, W. 2004 Exact steady periodic water waves with vorticity. *Commun. Pure Appl. Math.* **57**, 481–527.

[15] Craig, W. & Nicholls, D. P. 2000 Traveling two and three dimensional capillary gravity water waves. *SIAM J. Math. Anal.* **32**, 323–359.

[16] Craig, W. & Sulem, C. 1993 Numerical simulation of gravity waves. *J. Comp. Phys.* **108**, 73–83.

[17] Dancer, E. N. 1973 Bifurcation theory for analytic operators. *Proc. Lond. Math. Soc.* **26**, 359–384.

[18] Dancer, E. N. 1973 Global solution branches for positive mappings. *Arch. Rat. Mech. Anal.* **52**, 181–192.

[19] Dancer, E. N. 1973 Global structure of the solution set of non-linear real-analytic operators. *Proc. Lond. Math. Soc.* **27**, 747–765.

[20] Devaney, R. L. 1976 Homoclinic orbits in Hamiltonian systems. *J. Diff. Eqns.* **21**, 431–438.

[21] Groves, M. D. 2001 An existence theory for three-dimensional periodic travelling gravity-capillary water waves with bounded transverse profiles. *Physica D* **152–153**, 395–415.

[22] Groves, M. D. & Haragus, M. 2003 A bifurcation theory for three-dimensional oblique travelling gravity-capillary water waves. *J. Nonlinear Sci.* **13**, 397–447.

[23] Groves, M. D., Haragus, M. & Sun, S.-M. 2002 A dimension-breaking phenomenon in the theory of gravity-capillary water waves. *Phil. Trans. Roy. Soc. Lond. A* **360**, 2189–2243.

[24] Groves, M. D. & Mielke, A. 2001 A spatial dynamics approach to three-dimensional gravity-capillary steady water waves. *Proc. Roy. Soc. Edin. A* **131**, 83–136.

[25] Groves, M. D. & Toland, J. F. 1997 On variational formulations for steady water waves. *Arch. Rat. Mech. Anal.* **137**, 203–226.

[26] Iooss, G. 1999 Gravity and capillary-gravity periodic travelling waves for two superposed fluid layers, one being of infinite depth. *J. Math. Fluid Mech.* **1**, 24–63.

[27] Iooss, G. & Kirchgässner, K. 1990 Bifurcation d'ondes solitaires en présence d'une faible tension superficielle. *C. R. Acad. Sci. Paris, Sér. 1* **311**, 265–268.

[28] Iooss, G. & Kirchgässner, K. 1992 Water waves for small surface tension: an approach via normal form. *Proc. Roy. Soc. Edin. A* **122**, 267–299.

[29] Iooss, G. & Kirrmann, P. 1996 Capillary gravity waves on the free surface of an inviscid fluid of infinite depth. Existence of solitary waves. *Arch. Rat. Mech. Anal.* **136**, 1–19.

[30] Jones, M. & Toland, J. F. 1986 Symmetry and the bifurcation of capillary-gravity waves. *Arch. Rat. Mech. Anal.* **96**, 29–53.

[31] Keady, G. & Norbury, J. 1978 On the existence theory for irrotational water waves. *Math. Proc. Camb. Phil. Soc.* **83**, 137–157.

[32] Kielhöfer, H. 1988 A bifurcation theorem for potential operators. *J. Func. Anal.* **77**, 1–8.

[33] Kirchgässner, K. 1982 Wave solutions of reversible systems and applications. *J. Diff. Eqns.* **45**, 113–127.

[34] Kirchgässner, K. 1988 Nonlinear resonant surface waves and homoclinic bifurcation. *Adv. Appl. Math.* **26**, 135–181.

[35] Krasovskii, Y. P. 1961 On the theory of steady-state waves of large amplitude. *U.S.S.R. Comp. Math. and Math. Phys.* **1**, 996–1018.

[36] Levi-Cività, T. 1925 Détermination rigoureuse des ondes permanentes d'ampleur finie. *Math. Ann.* **93**, 264–314.

[37] Lombardi, E. 1997 Orbits homoclinic to exponentially small periodic orbits for a class of reversible systems. Application to water waves. *Arch. Rat. Mech. Anal.* **137**, 227–304.

[38] Luke, J. C. 1967 A variational principle for a fluid with a free surface. *J. Fluid Mech.* **27**, 395–397.

[39] McLeod, J. B. 1982 Stokes and Krasovskii's conjectures for the wave of greatest height. *Stud. Appl. Math.* **98**, 311–334.

[40] Mielke, A. 1991 *Hamiltonian and Lagrangian Flows on Center Manifolds*. Berlin: Springer-Verlag.

[41] Moser, J. 1976 Periodic orbits near an equilibrium and a theorem by Alan Weinstein. *Commun. Pure Appl. Math.* **29**, 727–747.

[42] Nekrasov, A. I. 1921 On steady waves. *Izv. Ivanovo-Voznesensk. Politekhn. In-ta* **3**.

[43] Nekrasov, A. I. 1951 The exact theory of steady waves on the surface of a heavy fluid. *Izdat. Akad. Nauk. SSSR, Moscow*.

[44] Okamoto, H. & Shoji, M. 2001 *The Mathematical Theory of Permanent Progressive Water-Waves*. Singapore: World Scientific.

[45] Plotnikov, P. I. 1980 Solvability of the problem of spatial gravitational waves on the surface of an ideal fluid. *Sov. Phys. Dokl.* **25**, 170–171.

[46] Plotnikov, P. I. 1982 A proof of the Stokes conjecture in the theory of surface waves. *Dinamika Splosh. Sredy* **57**, 41–76. (English translation *Stud. Appl. Math.* **108**, 217–244.)

[47] Plotnikov, P. I. 1983 Justification of the Stokes hypothesis in the theory of surface waves. *Soviet Phys. Dokl.* **28**.

[48] Plotnikov, P. I. 1992 Nonuniqueness of solutions of the problem of solitary waves and bifurcation of critical points of smooth functionals. *Math. USSR Izvestiya* **38**, 333–357.

[49] Plotnikov, P. I. & Toland, J. F. 2004 Convexity of Stokes waves of extreme form. *Arch. Rat. Mech. Anal.* (in press)

[50] Reeder, J. & Shinbrot, M. 1981 Three dimensional nonlinear wave interaction in water of constant depth. *Nonlinear Analysis TMA* **5**, 303–323.

[51] Stokes, G. G. 1880 Considerations relative to the greatest height of oscillatory irrotational waves which can be propogated without change of form. In *Mathematical and Physical Papers, Volume 1*, pages 225–228. Cambridge: C.U.P.

[52] Sun, S. M. 1999 Nonexistence of truly solitary waves with small surface tension. *Proc. Roy. Soc. Lond. A* **455**, 2191–2228.

[53] Toland, J. F. 1978 On the existence of a wave of greatest height and Stokes's conjecture. *Proc. Roy. Soc. Lond. A* **363**, 469–485.

[54] Toland, J. F. 1996 Stokes waves. *Topol. Meth. Nonlinear Anal.* **7**, 1–48.

[55] Vanderbauwhede, A. 1989 Centre manifolds, normal forms and elementary bifurcations. *Dynamics Reported* **2**, 89–169.

[56] Vanderbauwhede, A. & Iooss, G. 1992 Centre manifold theory in infinite dimensions. *Dynamics Reported* **1**, 125–163.

[57] Zakharov, V. E. 1968 Stability of periodic waves of finite amplitude on the surface of a deep fluid. *Zh. Prikl. Mekh. Tekh. Fiz.* **9**, 86–94. (English translation *J. Appl. Mech. Tech. Phys.* **9**, 190–194.)