Citation for published version:
Masood-ul Hasan, Yanqing Zhu, and Yichuang Sun, 'Design for testability of high-order OTA-C filters', *Circuit Theory and Applications*, Vol. 44 (10): 1859-1873, October 2016.

DOI:
https://doi.org/10.1002/cta.2200

Document Version:
This is the Accepted Manuscript version.
The version in the University of Hertfordshire Research Archive may differ from the final published version.

Design for Testability of High-order OTA-C Filters

Masood-ul Hasan[1], Yanqing Zhu[2, 1,*,†] and Yichuang Sun[1]

1. School of Engineering and Technology, University of Hertfordshire, Hatfield, UK

2. College of Electrical and Information Engineering, Hunan University, Changsha, China

ABSTRACT

A study of oscillation-based test for high-order OTA-C filters is presented. The method is based on partition of a high-order filter into second-order filter functions. The opening Q-loop and adding positive feedback techniques are developed to convert the second-order filter section into a quadrature oscillator. These techniques are based on an open-loop configuration and an additional positive feedback configuration. Implementation of the two testability design methods for nth-order cascade, IFLF and LF filters is presented and the area overhead of the modified circuits is also discussed. The performances of the presented techniques are investigated. Fourth-order cascade, IFLF and LF OTA-C filters were designed and simulated for analysis of fault coverage using the adding positive feedback method based on an analogue multiplexer. Simulation results show that the OBT method using positive feedback provides high fault coverage of around 97%, 96% and 95% for the cascade, IFLF and LF OTA-C filters respectively.

Keywords: circuit testing; oscillation-based test; OTA-C filter; high-order filter

1. Introduction

The Oscillation-Based Test (OBT) is a low-cost method for analogue circuits. The idea of this method is to convert the circuit under test (CUT) into an oscillator [1-3]. A feedback circuit is added to create self-sustained oscillation under the test mode. The oscillation frequency (f_{OSC}) is usually used as the fault feature. The OBT method is very promising since no external test stimulus is required and the additional testing circuit can be easily embedded into the CUT. The OBT technique has been applied to various kinds of analogue and mixed-signal circuits [4-10]. As active analogue filters are widely used building blocks in RF, analogue and mixed-signal integrated circuits, significant OBT research has been conducted on low-cost testing of analogue filters [11-13]. Recent studies have been conducted on OBT applied to different Gm-C filters [14-19]. In these works, an exhaustive set of simulations and experiments was performed showing a good fault coverage rate, in agreement to the ones reported in previous approaches.

The OBT methods proposed in this paper for high-order OTA-C filters are based on the partition of a high-order filter into second-order filter functions and require a small number of MOS switches for modification compared with the bypassing and multiplexing methods. Therefore the OBT methods have negligible impact on the performance of the filters, low

* Correspondence to: Yanqing Zhu, College of Electrical and Information Engineering, Hunan University, Changsha, China.

† E-mail: zhuyanqing@ymail.com

area overhead, less modification, low power consumption and short test time. The OBT methods use vectorless output frequency comparison between fault-free and faulty circuits so that the requirement of input test signal and special test equipment are also eliminated.

Commonly used design approaches for high-order OTA-C filters are based on cascade and multiple loop feedback structures. Choice of the feedback network can result in the cascade, inverse follow-the-leader feedback (IFLF) and leapfrog (LF) configurations [20]. These types of multistage (high-order) OTA-C filter structures can be modified to implement oscillation-based DFT techniques. The application of the OBT methods for *n*th-order cascade, IFLF and LF OTA-C filters are presented and discussed in this paper. The fourth-order cascade, IFLF and LF OTA-C filters are also designed and simulated for verification of the validity of the proposed methods.

This paper is organised in the following way. The OBT structures for high-order OTA-C filters are discussed in Section 2. The partitioning and conversion of biquadratic stages of Cascade, IFLF and LF high order OTA-C filters into oscillators using simple MOS switches only are discussed in Section 3. The positive feedback method using an extra OTA and MOS switches for converting high-order filter into oscillator is presented in Section 4. Section 5 is concerned with simulation results of fourth-order Cascade, IFLF and LF OTA-C filters. Finally, some conclusions are given in Section 6.

2. OBT Structures for High-Order OTA-C Filters

Oscillation-based test structures for high-order OTA-C filters are based on the decomposition of high-order filter into functional building blocks. The partitioning of the filter should be made such that each individual block represents a biquadratic transfer function. Then these blocks can be converted into oscillators by establishing the oscillation conditions in their transfer functions. The oscillation conditions are obtained from the Barkhausen criterion [2]. It states that the signal must traverse the loop with no attenuation and no phase shift at the frequency of oscillation ω_0. For positive feedback, the phase shift must be zero, but for negative feedback, the phase shift must be 180 to cancel the feedback sign and produce a total phase shift of zero. The quadrature oscillator model can ideally be described by a second-order characteristic equation:

$$(s^2 - bs + \omega_0^2)V_0(s) = 0 \tag{1}$$

Where $V_0(s)$ is the output of oscillator. Oscillation will happen at the oscillation frequency ω_0 when the oscillation parameter b = 0.

During test mode operation, each block will oscillate at a frequency which is a function of its component values and transconductance of the OTAs. Deviations in the oscillation frequency from the resonance frequency of the block indicate faulty behaviour of the components in the block. The sensitivity of the oscillation frequency with respect to the variations of the component parameters will determine the detectable range of the fault.

Implementation of the oscillation-based DFT method requires the following modifications to the original filter: decomposition of the filter into the biquadratic stages, isolation of biquadratic stages from each other and reconfiguration of the feedback network of each biquadratic stage to establish the oscillation conditions in its transfer function. All these modifications can be carried out by insertion of MOS transistor switches into the original filter circuits. Therefore the MOS transistors are the key components in OBT testing and

provide the testable structure of the high-order OTA-C filter. The accuracy of the transistors directly affects the accuracy and functionality of the filter under test. The most important characteristics of a transistor are “on” resistance, “off” resistance and the values of parasitic capacitors. The performance of the modified filter directly depends upon the specification of the inserted switch parameters and the place of switches in the circuits. Therefore the selection of optimum size and a sensible point in signal paths for switch insertion will ensure the accuracy and original functionality of the filter under test.

The test and fault detection procedure of OBT is as follows. The filter under test is first tested in normal mode and the cut-off frequency measured. The test mode will be activated if the cut-off frequency deviates beyond the given tolerance band. In test mode, the high-order filter is decomposed into individual biquad oscillator blocks and individual oscillator frequencies are measured to isolate the faulty block. Comparison between the fault free frequency and the measured frequency of the corresponding oscillator block identifies the faulty stage of the filter under test. The deviation from the fault-free frequency will identify the fault, catastrophic or parametric, and the possible location of the fault in the stage.

The commonly used multistage OTA-C filter structures such as cascade, IFLF and LF are modified to implement the proposed oscillation-based DFT techniques. The implantation of opening Q-loop OBT method with MOS switches only and adding positive feedback OBT method with MOS switches and extra OTA to the *n*th-order cascade, IFLF and LF OTA-C filters are presented in the following sections.

3. Testing of High-order OTA-C Filters using MOS Switches only

The opening Q-loop OBT method using MOS switches only can be implemented for any type of high-order OTA-C filter with negligible impact on the performance of the original filter. The area overhead depends upon the type and order of the filter. In this section we will present techniques for decomposing high-order OTA-C filter into the second-order functional blocks and converting them into quadrature oscillators using MOS switches only. The conversion methods for cascade, IFLF and LF structures of *n*th-order OTA-C filters are proposed and discussed.

3. 1 nth-order Cascade OTA-C Filter

The cascade connection of second-order sections is the most popular and useful method for realization of high-order filter function. The testing of the cascade system requires the controllability and observability of internal nodes of the filter. The controllability and observability can be increased by partitioning the system into accessible blocks. The cascade filter structure can be divided into the blocks of second-order sections representing biquadratic transfer functions. The OBT based DFT architecture of cascade filter using MOS switches only is shown in Fig. 1, where Sn and Sp are the NMOS and PMOS transistor switches respectively.

The modified filter circuit in Fig.1 has two mode of operations, normal and test mode. In normal mode of operation all switches designated Sp are closed whereas the switches designated Sn are open and the circuit will perform the original filter functions. The transfer function of each second order filter can be derived as:

$$H(s)=\frac{Vout}{Vin}=\frac{\frac{g_{mi}g_{m(i+1)}}{C_iC_{i+1}}}{s^2+\frac{g_{m(i+1)}}{C_{i+1}}s+\frac{g_{mi}g_{m(i+1)}}{C_iC_{i+1}}} \quad i=odd, i=1,3,5....n-1 \tag{2}$$

Where n is the order of the filter and even. When n is odd, the last integrator can be combined with the (n-1)th integrator to form an oscillator. The cut-off frequency of each filter is given by:

$$\omega_{0i}=\sqrt{\frac{g_{mi}g_{m(i+1)}}{C_iC_{i+1}}} \tag{3}$$

When the test mode is invoked Sp switches are opened and Sn switches closed. Switches Sp split the filter into biquad stages and switches Sn convert these biquad stages into oscillators by opening Q-loop. The characteristic equation of the resulting oscillator can be described as:

$$s^2+\frac{g_{mi}g_{m(i+1)}}{C_iC_{i+1}}=0 \tag{4}$$

With the poles given by:

$$s_1,s_2=\pm j\sqrt{\frac{g_{mi}g_{m(i+1)}}{C_iC_{i+1}}} \tag{5}$$

Equations (3) - (5) show that the oscillation condition is satisfied by opening the Q-loop and the oscillation frequency is the cut-off frequency of the filter.

The area overhead depends upon the type and order of the filter. The implementation of the switch only OBT method for nth-order cascade filter requires n NMOS transistors and (n-1) PMOS transistors. The relative area overhead (AO) for the cascade structure can be calculated as:

$$\text{AO\_Cascade}=\frac{nA_n+(n-1)A_p}{A} \tag{6}$$

Where A is the original circuit area, A_n is the area of switch Sn, and A_p is the area of switch Sp.

3. 2 nth-order IFLF OTA-C Filter

The IFLF structure is one of the most popular active analogue filter structures due to their simplicity, low sensitivity and minimum number of components and IFLF OTA-C filter can be derived by using the multiple loop feedback approach. For testing, a nth-order IFLF OTA-C filter needs to be partitioned into second-order sections, which may not be as straightforward as the cascade structure due to coupling. The OBT based DFT architecture of a nth-order IFLF OTA-C filter using MOS switches only is shown in Fig. 2.

The modified IFLF OTA-C filter has also two modes of operations, normal and test mode. All Sp switches are closed and Sn are open in the normal mode of operation, in which the modified circuit acts as a high-order filter from the primary input to the filter output. In test mode of operation, Sp switches are opened to act as splitters and decompose the high-order filter into the individual blocks of second-order transfer function. By closing the Sn switches, each block is converted into an oscillator and its oscillation frequency is given by (3).

The area overhead of the IFLF-type structure is larger than the cascade-type since the IFLF-OTA-C filter requires changing in two feedback loops. The relative area overhead for the modified IFLF OTA-C filter is:

$$\text{AO\_IFLF} = \frac{(n+1)A_n + nA_p}{A} \tag{7}$$

Where *n* is the order of filter, A is the original circuit area, A_n is the area of switch Sn, and A_p is the area of switch Sp.

3. 3 nth-order LF OTA-C Filter

The leap-frog structure is another most popular choice in multiple integrator loop feedback OTA-C filter design. The LF configuration has advantages of minimum passband magnitude sensitivity, maximum input voltage, and good magnitude frequency response. The testing of nth-order LF filter can be performed using the OBT method based on MOS switches only. Any even-order LF filter can be divided into a combination of second-order transfer functions by insertion of switches in its feedback loops. For an odd-order filter the last integrator can be combined with the second last integrator to form a second-order transfer function; the second last integrator was tested in the previous second-order block. The testable nth-order LF OTA-C filter is shown in Fig. 3.

When all Sp switches are closed and Sn switches are open, the circuit in Fig. 3 behaves as an *n*th-order LF OTA-C filter with negligible performance degraded. The impact on the performance and accuracy of the filter mainly comes from the parasitic capacitances and the on-resistance of the Sp switches. These switches are in the signal path and must be realized with minimum values of "on" resistance. The filter will be converted into the quadrature oscillator stages as the test mode is activated by opening and closing Sp and Sn switches respectively. The oscillation frequency of the filter stages depend upon the transconductance and capacitance values of that stage and is given by (3). The relative area overhead for the modified *n*th-order LF filter structure is given by:

$$\text{AO\_LF} = \frac{nA_n + (n-1)A_p}{A} \tag{8}$$

The area overhead of the LF-type structure is the same as the cascade-type since only one feedback loop requires changing for both cases.

4. Testing of High-order OTA-C Filters using an Additional OTA and MOS Switches

The adding positive feedback OBT method can be implemented in the high-order OTA-C filter of any type of configuration. The positive feedback loop can be realized by using an extra OTA, an analogue multiplexer and MOS transistor switches for *n*th-order OTA-C filters. The order of analogue multiplexer and number of MOS switches depends upon the type and order of the OTA-C filter. The positive feedback loop and MOS switches converts the biquadratic stage to a second-order oscillator system which has the potential of self-start oscillation. The implementation techniques of the positive feedback method to cascade, IFLF and LF high-order OTA-C filters are presented in the following subsections.

4. 1 Cascade High-order OTA-C Filter

The high-order cascade OTA-C filter can be decomposed into the second-order filter sections by using minimum number of MOS transistors switches. The number of switches for dividing

the filter into the biquadratic stages depends on the order of the filter, for an even order filter, n/2 switches and for an odd order filter n/2+1 switches are required.

The modified nth-order cascade OTA-C filter based on the positive feedback OBT method is shown in Fig. 4. The modified cascade OTA-C filter has also two modes of operation, normal and test mode. In the normal mode of operation all Sp and Sn switches are closed and open respectively, the modified circuit acts as a high-order filter. In the test mode of operation, Sp switches are opened and decompose the high-order filter into the individual blocks of second-order transfer function. Each biquadratic stage will be converted into an oscillator as the switches Sn are closed and the extra OTA is connected to the respective output node through the analogue multiplexer. The second order characteristic equation of the oscillator is given by:

$$V_o(s)(s^2 + \frac{g_{m(i+1)} - g_{\mathrm{Ext}}}{C_{i+1}} s + \frac{g_{mi} g_{m(i+1)}}{C_i C_{i+1}}) = 0 \tag{9}$$

Where $V_0(s)$ is the output of oscillator, and the oscillation frequency ω_o and the oscillation parameter b are given by:

$$\omega_0 = \sqrt{\frac{g_{mi} g_{m(i+1)}}{C_i C_{i+1}}} \tag{10}$$

$$b = \left(g_{m(i+1)} - g_{\mathrm{Ext}}\right) / C_{i+1} \tag{11}$$

Equations (10) and (11) show that the transconductances appearing in the expression for *b* are different from the transconductances for ω_o. We can set the oscillation conditions by tuning transconductance g_{Ext} without affecting the oscillator frequency. Hence, using an extra OTA provides better controllability of oscillation conditions. The implementation of the positive feedback OBT method for the *n*th-order cascade filter requires *n*/2 NMOS and *n*/2 PMOS transistors. The relative area overhead can be calculated as:

$$\mathrm{AO\_Cascade} = \frac{nA_n + (n-1)A_p + 2A_{am} + 2A_{Ext}}{2A} \tag{12}$$

Where *n* is the order of filter, A is the original circuit area, A_{am} is the area of analogue multiplexer, A_{Ext} is the area of the extra OTA, A_n is the area of switch Sn, and A_p is the area of switch Sp. The testable cascade filter circuit in Fig.4 has the advantages of minimum components for modifications with negligible effect on the filter performance, low area overhead, low power consumption and test cost. However the modified filter has a variable test time and the test time depends on the order of the filter due to the testability of individual stages in multiplex domain. The fixed test time can be achieved by using a separate OTA and frequency counter for each biquadratic stage but this will have to pay the penalty in terms of area overhead, power consumption and test cost.

4. 2 IFLF High-order OTA-C Filter

The *n*th-order IFLF filter can be divided into the biquadratic stages using MOS transistor switches and an additional OTA. But it requires almost twice number of MOS switches as compared with the cascade structure due to its feedback loop. The IFLF filter structure requires both types of switches; switches in signal path for dividing the filter into biquadratic stages and switches in feedback path to break the summing node and establish oscillation

conditions. The testable *n*th-order IFLF OTA-C filter based on the positive feedback OBT method is shown in Fig. 5.

The circuit in Fig. 5 requires an extra OTA, an analogue multiplexer and MOS switches for partitioning the high-order filter and establishing the oscillation conditions in the test mode. The oscillation frequency ω_o and oscillation parameter b are given in (10) and (11) respectively. The relative area overhead can be calculated as:

$$\text{AO\_IFLF} = \frac{(n-1)A_n + (n-2)A_p + A_{am} + A_{Ext}}{A} \tag{13}$$

4. 3 LF High-order OTA-C Filter

The partitioning of an *n*th-order LF OTA-C filter into the biquadratic stages requires the same number of MOS switches as by the *n*th-order IFLF filter. These switches are required to break the signal path from the even to odd number of OTA and feedback loop from the odd to even number of OTA. The biquadratic stages of the filter then can be converted into oscillators by using an extra OTA through the analogue multiplexer. The modified *n*th-order LF OTA-C filter based on the positive feedback loop OBT method is illustrated in Fig. 6.

The oscillation frequency ω_o and oscillation parameter *b* are given in (10) and (11) respectively. The relative area overhead can be expressed as:

$$\text{AO\_LF} = \frac{(n-1)A_n + (n-2)A_p + A_{am} + A_{Ext}}{A} \tag{14}$$

5. Design and Simulation of Fourth-order OTA-C Filters

In Sections 3 and 4, the opening Q-loop and adding positive feedback OBT methods for high-order OTA-C filters are presented. The opening Q-loop method is very simple and of low cost and small chip area overhead as it uses switches only. However, it requires two types of MOS switch: switches in signal path for dividing the filter into biquadratic stages and switches in feedback path to establish oscillation conditions. The extra switches in the filter configuration will produce considerable effects on the performance of the high-order filter. The parasitic capacitance and on-resistance of these MOS switches would degrade the performance of the filter. Furthermore, the faults which are not included in the oscillator circuits cannot be detectable, resulting in low fault coverage. All these problems can easily be overcome by adding an extra positive feedback loop in the original filter structures. The positive feedback loop is realized by using an extra OTA and MOS switches at the integrator output node, therefore introducing very negligible effects on the performance of the filter and resulting in high fault coverage with all OTAs of the filter included in the test.

In our previous work [15, 16], case studies were designed for two-integrator loop filters. Results demonstrate that the two-integrator loop filter with MOS switches has a cut-off frequency slightly lower than the cut-off frequency of the original filter. This is because the MOS switch in the feedback path has finite on-resistance and parasitic capacitances. However, the filter modified with an extra positive feedback loop has performance very similar to the original filter because the positive feedback loop is connected to the circuit only when the test mode is activated. To quantify the fault coverage and the efficiency of the proposed OBT methods, a number of different catastrophic and parametric faults were inserted into the original filter circuits in [15, 16]. Fault detection results present that the opening Q-loop method can detect all the catastrophic faults and most of the parametric faults.

From the oscillator equations of the opening Q-loop method, it is obvious that those faults that do not affect the frequency of oscillation cannot be detected. The results also show that all injected faults have manifested themselves by affecting the oscillation frequency in the adding positive feedback method, and therefore can be detected. These results indicate that the adding positive feedback method for two-integrator loop filters has an advantage of high fault coverage and less degradation of the performance of the original filter.

In the switch only OBT method, the problem arises from the disadvantage of low controllability over the oscillation conditions. The oscillator characteristic equation (4) indicates that the oscillation frequency and oscillation conditions are not independent. Therefore the parametric or parasitic deviations change the oscillation frequency as well as the oscillation conditions, resulting in the amplitude of oscillation being not stable. On the contrary, the OBT method using an extra OTA and MOS switches shows that the transconductances appearing in the expression for the oscillation frequency are different from those appearing in the corresponding expression for oscillation conditions. This means that the faults which cause change in the oscillation frequency may not affect the oscillation conditions. The oscillation conditions of the oscillator can be adjusted according to the faults or the amount of deviation by tuning the transconductance of the extra OTA.

To verify the proposed adding positive feedback OBT method, we designed lowpass fourth-order cascade, IFLF and LF OTA-C filters as case studies herein, using design equations given in [21] with the chosen cut-off frequency of 50MHZ. A differential input CMOS OTA shown in Fig.7 is employed to realize the OTA-C filters. The equal transconductance methodology is used to design these fourth-order filters with nominal transconductance value of gm = 850µs. Frequency denormalisation at 50MHz gives the normalised circuit capacitances of the filters in Table 1.

The proposed OBT method requires certain modifications in the original filter circuits. All these modifications can be carried out by insertion of MOS transistor switches into the original filter circuits. In the domain of analogue circuit design it is not a simple matter to break loops by inserting MOS switches in metallised track connections. Therefore the MOS switch transistors are the key components in OBT and provide the testable structure of the OTA-C filter.

The characteristics of switches directly affect the accuracy and functionality of the filter under test. The most important characteristics of a switch transistor are “on” resistance, “off” resistance and the values of parasitic capacitors. The series resistance of a MOS transistor is several orders of magnitude greater than the resistance of the metal track. Similarly capacitance of the switch is also many times higher than that of the metal track. The effective resistance of a MOS transistor operating in the linear region may be expressed as [22]:

$$R_{DS} = \frac{L}{kW}(V_{GS} - V_T)^{-1} \tag{15}$$

A larger aspect ratio will reduce the series resistance. However, the parasitic capacitance is approximately proportional to the product of width and length. Therefore choosing an optimum aspect ratio and a sensible point in signal paths for switch insertion will ensure the minimal impact on performance of the filter. The modified filter circuit requires two types of switches; switches in signal path and switches in feedback path to establish oscillation conditions. The switches in the signal paths are realized using MOS transistors with

minimum values of “on” resistance, whereas all other switches are designed for minimum size.

All simulations were performed in analogue environment using PSPICE simulator of level 7 for verification of the proposed OBT method. Results confirmed that the self-starting and sustained oscillations are achieved by the circuit modifications described in the above sections. Simulation results also confirmed that the both quadrature stages were converted into oscillators for each type of filter and produced the fault free oscillation frequency close to the cut-off frequency of the corresponding filter stage. The magnitude versus frequency responses of the modified fourth-order lowpass filters for both filter and test modes of operation with the details of the cut-off frequency and oscillation frequency of each biquadratic stage are given in Table 2.

The simulation results in Table 2 have shown that the fourth-order cascade OTA-C filter with MOS switches for filter decomposition has a lower cut-off frequency than the original filter whilst the IFLF and LF filters have a similar cut-off frequency with the original cut-off frequency. The cascade filter has extra MOS switch in the signal path for partitioning the filter into two biquadratic stages, therefore the switch on-resistance and parasitic capacitances affect the impedance matching between the two cascade stages of the filter. The oscillation frequencies of biquadratic stages of each type of filter are less than from their respective cut-off frequencies, due to the on-resistance and parasitic capacitances of the analogue multiplexer switches and the extra OTA of the positive feedback loop.

To quantify the fault coverage and the efficiency of the OBT method for high-order OTA-C filter, a number of different catastrophic and parametric faults were injected into the original filter circuits using the fault-modelling discussed in [15]. The oscillation frequency of each filter stage under test was measured and the frequency deviation with respect to the fault free frequency of the corresponding stage is calculated. The undetectable tolerance band for parametric faults has been determined using Monte Carlo analysis for 5% tolerance in the values of the components. The Monte Carlo analysis shows that the biquadratic stage has lower and upper frequency deviation of around -2.5% and 4.5% respectively.

The comprehensive list of parametric fault due to the parameter deviations from ±10% to ±50% are given in Tables 3, 4 and 5 for the fourth-order cascade, IFLF and LF OTA-C filters respectively.

It can be seen from Table 3, 4 and 5 that most of the parametric faults are detectable except a small number of faults which produced frequency deviation inside the tolerance band. Forty parametric faults were injected into each testable filter, in which 97% were detectable in the cascade filter, 96% in the IFLF and 95% in the LF. The results also show that the injected faults produced oscillation with stabilized output signal amplitude without significant deviation.

The simulation results of the catastrophic faults are given in Tables 6 for the cascade, IFLF and IF OTA-C filters.

The results in Table 6 demonstrate that the injected stuck open faults in the passive components have manifested themselves by affecting the oscillation frequency, and therefore can be detected and diagnosed. All other catastrophic faults, short and open circuits, saturated the filter under test and made the converted oscillator stages not oscillate. These types of faults are detectable but cannot be diagnosable. Therefore all catastrophic faults are

detectable and the overall fault detection coverage for the fourth-order cascade, IFLF and LF OTA-C filter using the positive feedback OBT method are 97, 96 and 95 percent respectively.

6. Conclusions

In this paper we have proposed and presented the implementation techniques of the OBT methods for the high-order OTA-C filter. The opening Q-loop and adding positive feedback OBT methods for the nth-order cascade, IFLF and LF filters have been discussed and the formulations of area overhead of the modified circuits have also been presented.

The opening Q-loop method is realized using MOS switches only and requires minimum number of components for the modification in the high-order OTA-C filter. Therefore the MOS switch only method for high-order OTA-C filter requires low area-overhead and relatively low power consumption. However the switch only method needs to insert control switches in both signal and feedback paths of the filter. The switches in the signal path are required for decomposition of the filter into quadratic stages and switches in the feedback path for converting these biquadratic stages into oscillator. The modified biquadratic stage has low controllability over oscillation conditions and certain parametric deviations are not able to produce stabilized oscillation resulting in overall low fault coverage and long test time. Furthermore the switches in both paths may have degraded the performance of the high-order filter.

The adding positive feedback method can be implemented in any type of high-order OTA-C filter using an extra OTA, an analogue multiplexer and MOS switches. The transconductance value of the extra feedback OTA can be adjusted to establish and sustain oscillation, resulting in better controllability of oscillation conditions.The number of MOS switches depends on the order and type of the filter. The analogue multiplexer based positive feedback method requires only one additional OTA for converting biquadratic stages into oscillator. The positive feedback method can also be implemented using an extra OTA in place of the analogue multiplexer for each biquadratic stage but these additional OTAs require relatively high power consumption, large area overhead and high cost compared with using an analogue multiplexer. The multiplexer based OBT method for high-order OTA-C filter has the advantages of minimum components, minor modification in the original circuits, low area overhead and low power consumption. However the order of filter will determine the test time because the biquadratic stages of the filter will be tested one by one.

The fourth-order cascade, IFLF and LF OTA-C filters were used for case studies and analysis of the fault coverage of the OBT method based on the analogue multiplexer. Fifty-eight catastrophic and parametric faults were injected in each biquadratic stage of the OTA-C filter, in which forty faults were parametric and the rest of eighteen faults were catastrophic. All of the catastrophic faults were detectable by producing frequency deviation or saturating the oscillator output. The most of the parametric faults produced frequency deviation outside the tolerance band. The simulated results show that the OBT method using positive feedback provides high fault coverage of around 97%, 96% and 95% for the cascade, IFLF and LF OTA-C filters respectively. Although the proposed low cost design-for-testability OBT method has good fault coverage, further research work can be performed. As stated in [23], this design-for-test may result in accepting faulty chips or rejecting functional chips, hence the test metrics for the proposed method should be studied in future research. Meanwhile,

some researchers have pointed that frequency-only measurement can lead to relatively poor fault coverage and the alternative is the combined measurement of both the oscillator's frequency and amplitude [24-27], which can be a topic of our further research. Furthermore, switches are the key components in the proposed test structure. In this study, switches used to establish feedback loops, which are not inserted in the signal path, are realized simply using a minimum-sized NMOS transistor with $W = L$ to keep the switch size as small as possible. Switches appearing in the signal path which divide the filter into the biquadratic stages are realized using PMOS transistors with minimum values of "on" resistance. The "on" resistance of a MOS switch and its thermal noise contribution can be reduced by increasing the W/L ratio; however, increasing W and L will also increase the parasitic capacitance values. A trade-off must be made to satisfy all requirements. Hence, more specific criteria for the sizing of the switches should be studied in further research. Finally, the detailed study of sizing the analogue multiplexer and the extra OTA could be conducted to improve the proposed OBT methods further in the future.

References

1. Arabi K, Kaminska BL. Testing analogue and mixed-signal integrated circuits using oscillation-test method. *IEEE Trans. Computer-Aided Design Integr. Circuits Syst.* 1997; 16(7):745-753.
2. Arabi K, Kaminska BL. Oscillation-test methodology for low-cost testing of active analog filters. *IEEE Trans. Instrum. Meas.*1999; 48(4):798-806.
3. Marina SZ, Franc N, Srecko M. Efficient go no-go test of active RC filters. *International Journal of Circuit Theory and Applications*.1998; 26:523-529.
4. Callegari S. Introducing complex oscillation based test: An application example targeting analog to digital converters. *IEEE Int. Symp. Circuits and Systems. (ISCAS 2008), Seattle, WA,* 2008; 320-323.
5. Callegari S, Fabio P, Gianluca S, Mani S. On the usage of resonate and fire dynamics in the complex oscillation-based test approach. *International Journal of Circuit Theory and Applications*. 2013; 41(12):1290-1317.
6. Suenaga K, Isern E, Picos R, Bota S, Roca M, Garcia-Moreno E. Application of predictive oscillation-based test to a CMOS opamp. *IEEE Trans. Instrum. Meas.* 2010; 59(8):2076-2082.
7. Mrak P, Biasizzo A, Novak F. On measurement uncertainty of ADC nonlinearities in oscillation-based test. *Journal of Electrical Engineering* 2011; 62(6):359-362.
8. Arbet D, Brenkus J, Gyepes G, Stopjakova V. Increasing the efficiency of analog OBIST using on-chip compensation of technology variations. *2011 IEEE 14th Int. Symp. Design and Diagnostics Electronic Circuits & Systems. (DDECS), Cottbus*, 2011; 71-74.
9. Jang EJ, Gattiker A, Nassif S, Abraham A. An Oscillation-Based Test Structure for Timing Information Extraction. *2012 IEEE 30th VLSI Test Symp. (VTS), Hyatt Maui, HI*. 2012; 74-79.
10. Kovac M, Arbet D, Nagy G, Stopjakova V. An approach towards selection of the oscillation frequency for oscillation test of analog ICs. *17th Int. Symp. Design and Diagnostics Electronic Circuits & Systems, Warsaw, Poland*. 2014; 266 - 267.
11. Callegari S, Pareschi F, Setti G, Soma M. Complex oscillation-based test and its application to analog filters. *IEEE Trans. Circuits Syst. I, Reg. Papers*. 2010; 57(5): 956-969.
12. Callegari S, Pareschi F, Setti G, Soma M. Resonate and fire dynamics in complex oscillation based test of analog filters. *2011 IEEE Int. Symp. Circuits and Systems. (ISCAS), Rio de Janeiro.* 2011; 1331-1334.
13. Arbet D, Stopjakova V, Majer L, Gyepes G, Nagy G. New OBIST using On-chip Compensation of Process Variations towards Increasing Fault Detectability in Analog ICs. *IEEE Trans. Nanotechnol.* 2013; 12(4):486-497.
14. Hasan M, Sun Y. Oscillation-based Test Method for Continuous- time OTA-C Filters. *IEEE Asia Pacific Conf. Circuits and Systems. (APCCAS 2006), Singapore*. 2006; 904-907.

15. Hasan M, Sun Y. Oscillation-Based Test Structure and Method for OTA-C Filters. *13th IEEE Int. Con. Electronics, Circuits and Systems. (ICECS '06), Nice*. 2006; 98-101.
16. Hasan M, Sun Y, Zhu X, Moritz J. Oscillation-based DFT for Second-order OTA-C Filters. *IEEE Int. Symp. Circuits and Systems. (ISCAS 2008), Seattle.* 2008; 720-723.
17. Petrashin P, Peretti G, Romero E. OBT Implementation on an OTA-C Band-pass Filter. *2010 11th Int. Symp. Quality Electronic Design. (ISQED), San Jose, CA*. 2010; 271-276.
18. Petrashin P, Dualibe C. OBT implementation on Gm-C filters without self tuning capability. *2011 IEEE Int. Symp. Circuits and Systems. (ISCAS), Rio de Janeiro.* 2011; 2521-2524.
19. Cojan N, Cracan A. Novel implementation of OBT for a Gm-C filter. *2011 10th Int. Symp. Signals, Circuits and Systems. (ISSCS), lasi.* 2011; 1-4.
20. Sun Y, Fidler JK. Synthesis and performance analysis of universal minimum component integrator-based IFLF OTA-grounded capacitor filter. *IEE Proc. Circuits, Devices Syst*.1996; 143(2): 107-114.
21. Sun Y. *Design of High Frequency Integrated Analogue Filters*. *IEE Peter Peregrinus Ltd.* 2002.
22. Johns D A and Martin K, Analog Integrated Circuit Design, John Wiley & Sons, 1997.
23. Stratigopoulos H-G. Test metrics model for analog test development. *IEEE Transactions on Computer-Aided Design of Integrated Circuits and Systems*. 2012; 31(7): 1116-1128.
24. Gloria H S, et al. *Oscillation-Based Test in Mixed-Signal Circuits*. *Springer*. 2010.
25. Wong MW-T. On the issues of oscillation test methodology. *IEEE Transaction on Instrumentation and Measurement*. 2000; 49(2): 240-245.
26. Huertas G, et al. Practical Oscillation-Based Test of Integrated Filters. *IEEE Design and Test of Computers*. 2002; 19(6): 64-72.
27. Huertas G, et al. Testing Mixed-Signal Cores: Practical Oscillation-Based Test in an Analog Macrocell. *IEEE Design and Test of Computers*. 2002; 19(6): 73-82.

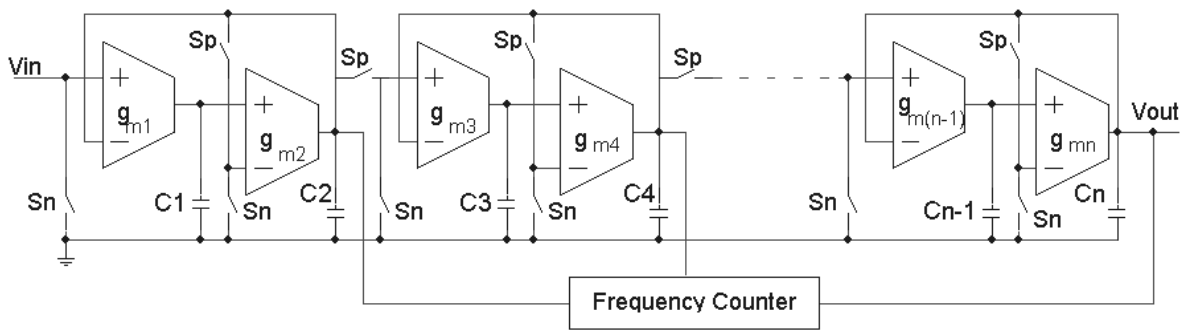

Figure 1. Testable nth-order cascade OTA-C filter using MOS switches only.

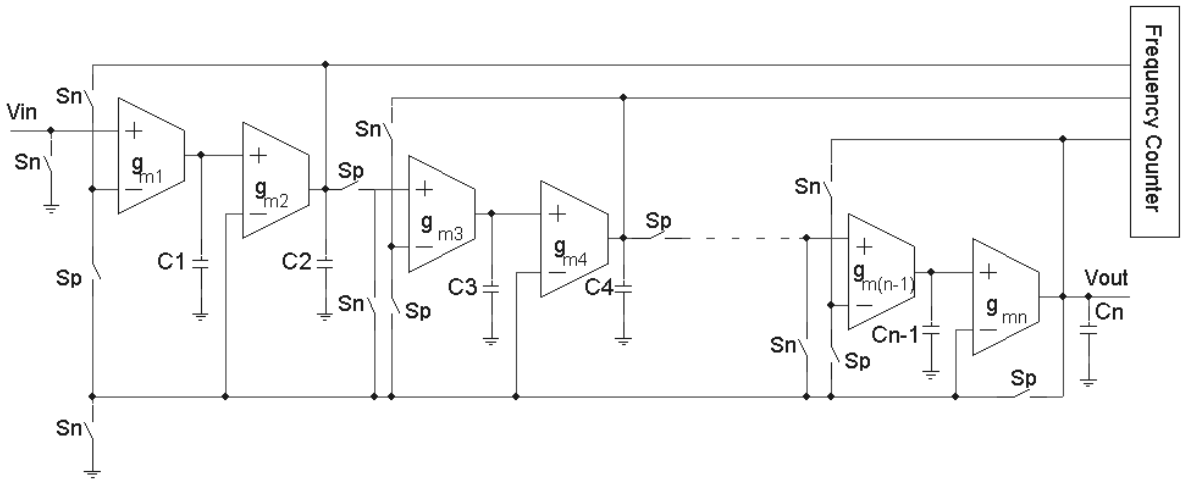

Figure 2. Testable nth-order IFLF OTA-C filter using MOS switches only.

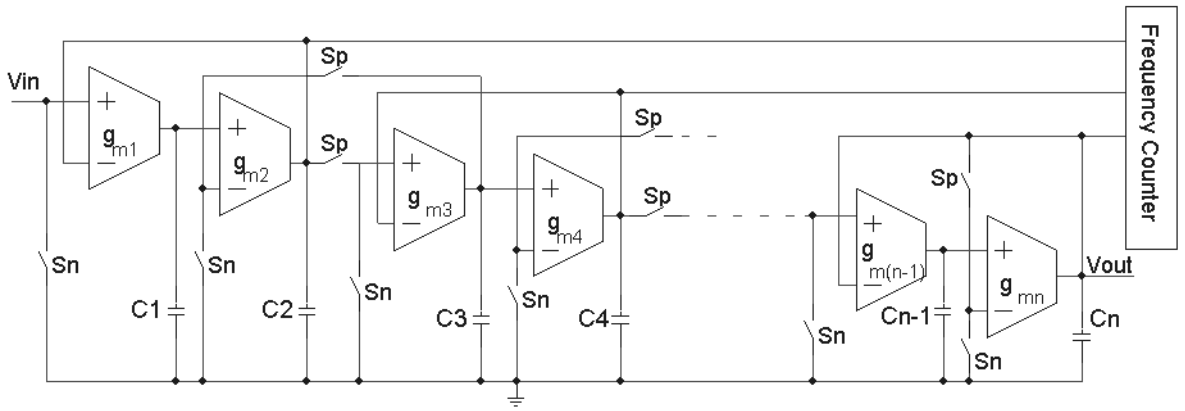

Figure 3. Testable nth-order LF OTA-C filter using MOS switches only.

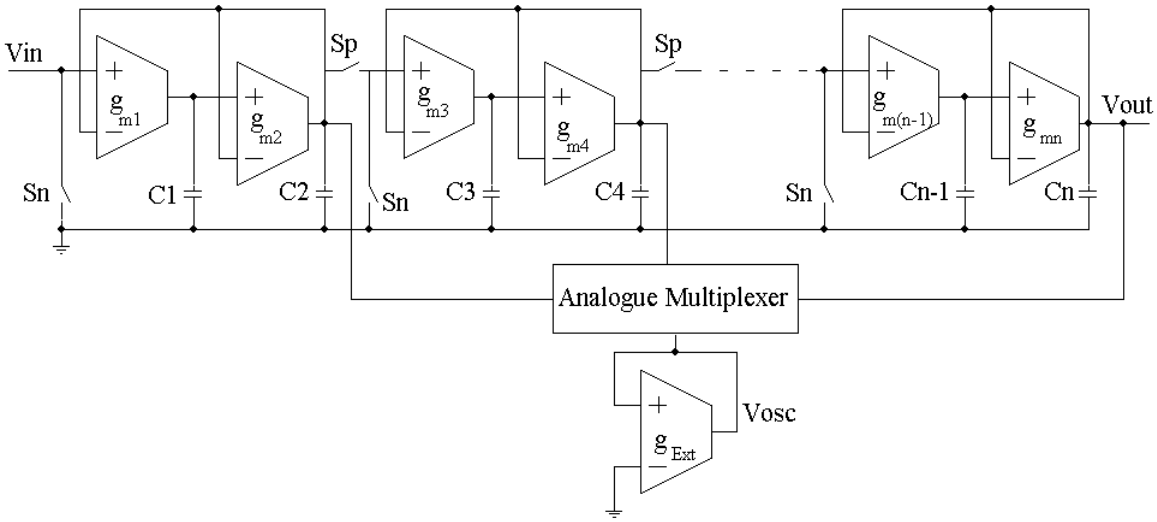

Figure 4. Testable nth-order cascade OTA-C filter based on positive feedback OBT method

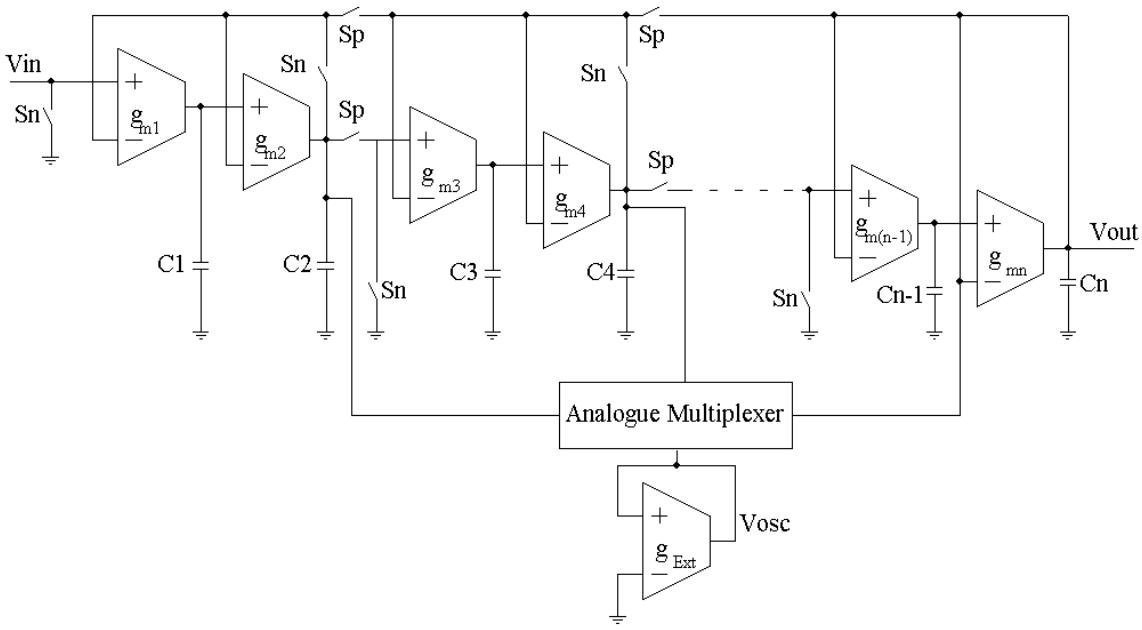

Figure 5. Testable nth-order IFLF OTA-C filter based on positive feedback OBT method.

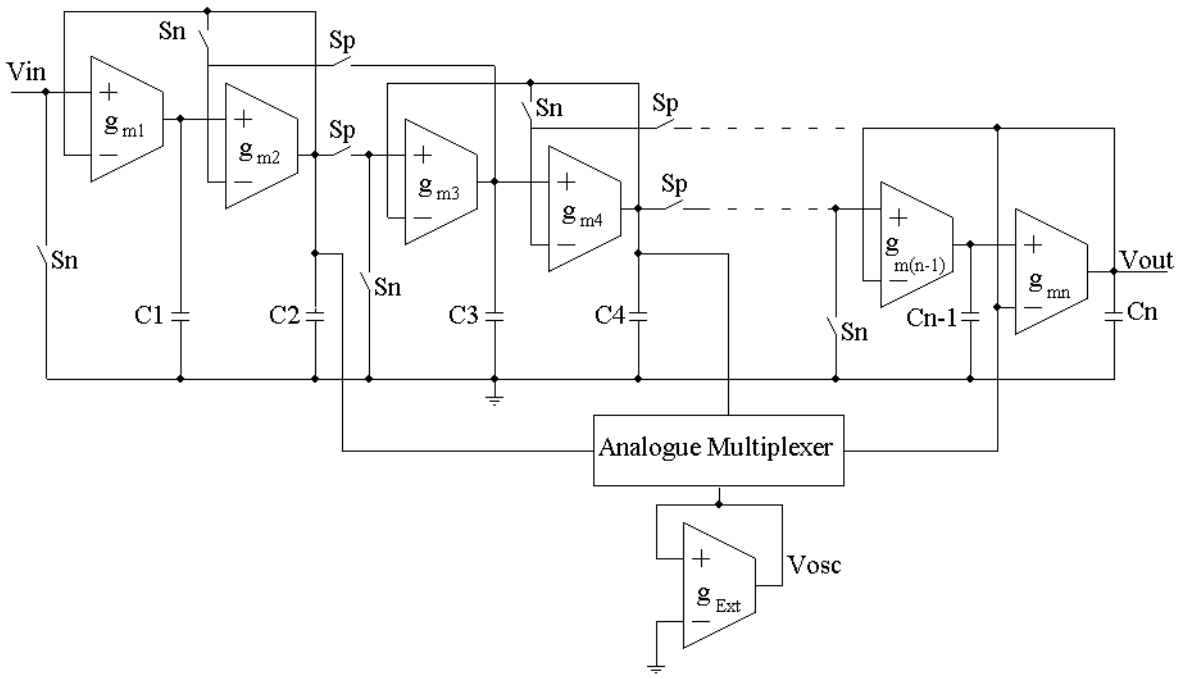

Figure 6. Testable nth-order LF OTA-C filter based on positive feedback OBT method.

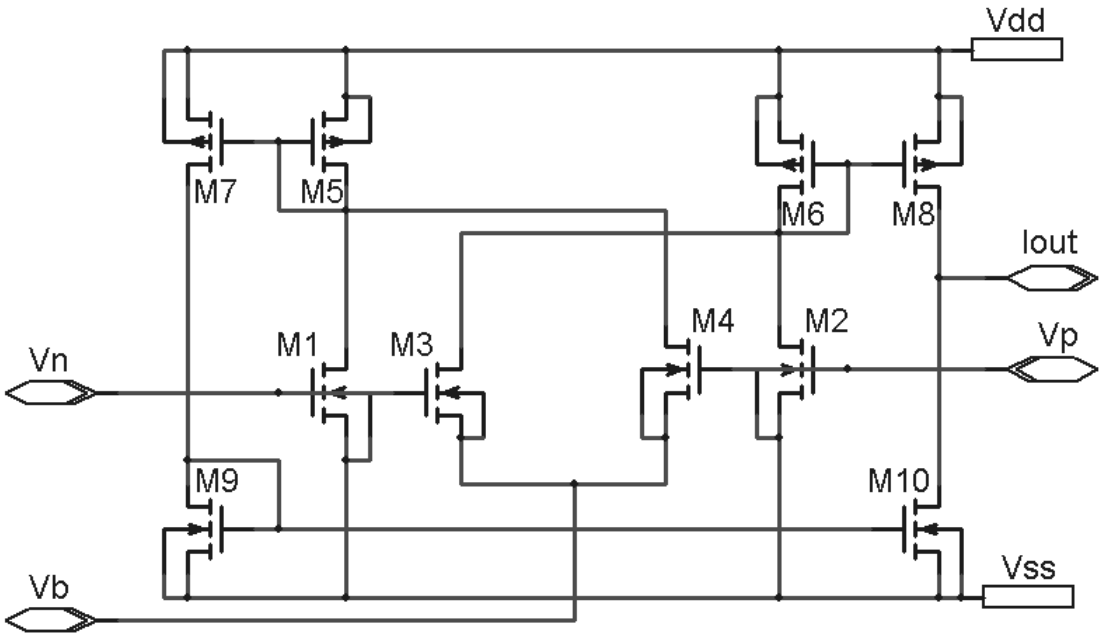

Figure 7. Schematic diagram of OTA cell used for simulation.

Table 1. Circuit capacitances for fourth-order Cascade, IFLF and LF filters.

Filter Type	C1	C2	C3	C4
Cascade	2.07pF	3.54pF	5pF	1.47pF
IFLF	7.07pF	3.54pF	2.07pF	1.04pF
LF	4.14pF	4.27pF	2.93pF	1.04pF

Table 2. AC responses of the testable fourth-order filters under test.

Type/Mode	Cascade		IFLF		LF	
	*f*osc	Vout	*f*osc	Vout	*f*osc	Vout
Filter	48MHz	0dB	50MHz	0dB	50.6MHz	0dB
Biquadratic Stage1	35MHz	1.12V	63MHz	1.4V	48.3MHz	1.31V
Biquadratic Stage2	35MHz	1.2V	21.3MHz	1.04V	24.7MHz	1.04V

Table 3. Parametric faults detections in fourth-order cascade OTA-C filter.

Component	Deviation	Cascade Filter					
		Oscillator Stage1			Oscillator Stage2		
		*f*osc (Hz)	Vout (V)	Δ*f*o/*f*o (%)	*f*osc (Hz)	Vout (V)	Δ*f*o/*f*o (%)
C1 & C3	-50%	4.60E+07	0.93	31.427	4.62E+07	1.31	32.00
	-40%	4.30E+07	0.98	22.857	4.30E+07	1.28	22.857
	-30%	4.04E+07	1.03	15.429	4.05E+07	1.25	15.714
	-20%	3.83E+07	1.06	9.4286	3.84E+07	1.23	9.7143
	-10%	3.66E+07	1.09	4.5714	3.66E+07	1.21	4.5714
	10%	3.38E+07	1.11	-3.429	3.37E+07	1.18	-3.714
	20%	3.27E+07	1.12	-6.572	3.25E+07	1.16	-7.143
	30%	3.17E+07	1.12	-9.428	3.14E+07	1.16	-10.27
	40%	3.08E+07	1.12	-12.00	3.04E+07	1.14	-13.14
	50%	2.99E+07	1.12	-14.57	2.95E+07	1.13	-15.72
C2 & C4	-50%	4.32E+07	1.30	23.429	4.53E+07	1.24	29.43
	-40%	4.11E+07	1.27	17.429	4.25E+07	1.22	21.43
	-30%	3.93E+07	1.23	12.286	4.01E+07	1.22	14.57
	-20%	3.77E+07	1.19	7.7143	3.82E+07	1.20	9.143
	-10%	3.62E+07	1.15	3.4287	3.65E+07	1.20	4.286
	10%	3.39E+07	1.07	-3.143	3.39E+07	1.19	-3.143
	20%	3.29E+07	1.02	-6.00	3.28E+07	1.18	-6.285
	30%	3.19E+07	0.98	-8.857	3.19E+07	1.17	-8.857
	40%	3.11E+07	0.94	-11.14	3.11E+07	1.16	-11.14
	50%	3.03E+07	0.90	-13.43	3.03E+07	1.16	-13.43
All Cap	-50%	5.63E+07	1.26	60.86	5.77E+07	1.40	64.86
	-40%	5.03E+07	1.23	43.71	5.10E+07	1.30	45.71
	-30%	4.53E+07	1.20	29.43	4.58E+07	1.28	30.86
	-20%	4.13E+07	1.17	18.00	4.15E+07	1.25	18.58
	-10%	3.79E+07	1.14	8.286	3.80E+07	1.22	8.572
	10%	3.26E+07	1.08	-6.861	3.26E+07	1.18	-6.86
	20%	3.05E+07	1.05	-12.85	3.05E+07	1.15	-12.86
	30%	2.86E+07	1.01	-18.29	2.86E+07	1.13	-18.29
	40%	2.69E+07	0.99	-23.14	2.69E+07	1.12	-23.14
	50%	2.55E+07	0.96	-27.14	2.55E+07	1.10	-27.14
gm	-50%	2.10E+07	0.50	-40.00	2.10E+07	0.74	-40.00
	-40%	2.44E+07	0.78	-30.29	2.41E+07	1.02	-31.14
	-30%	2.70E+07	0.99	-22.86	2.69E+07	1.17	-23.14
	-20%	2.98E+07	1.09	-14.86	2.98E+07	1.21	-14.86
	-10%	3.25E+07	1.11	-7.143	3.25E+07	1.21	-7.143
	10%	3.76E+07	1.09	7.429	3.75E+07	1.18	7.143
	20%	3.99E+07	1.08	14.00	3.97E+07	1.17	13.43
	30%	4.20E+07	1.06	20.00	4.16E+07	1.16	18.86
	40%	4.39E+07	1.04	25.43	4.32E+07	1.16	23.43
	50%	4.55E+07	1.02	30.00	4.44E+07	1.15	26.86

Table 4. Parametric faults detections in fourth-order IFLF OTA-C filter.

Component	Deviation	IFLF Filter					
		Oscillator Stage1			Oscillator Stage2		
		*f*osc (Hz)	Vout (V)	Δ*f*o/*f*o (%)	*f*osc (Hz)	Vout (V)	Δ*f*o/*f*o (%)
C1 & C3	-50%	7.83E+07	1.50	24.2857	2.86E+07	1.11	34.2723
	-40%	7.42E+07	1.47	17.7778	2.65E+07	1.09	24.4132
	-30%	7.07E+07	1.43	12.2222	2.48E+07	1.07	16.4319
	-20%	6.78E+07	1.44	7.61905	2.35E+07	1.06	10.3286
	-10%	6.53E+07	1.41	3.65079	2.23E+07	1.05	4.6948
	10%	6.11E+07	1.40	-3.0159	2.04E+07	1.03	-4.225
	20%	5.92E+07	1.38	-6.0318	1.96E+07	1.02	-7.981
	30%	5.76E+07	1.34	-8.5714	1.89E+07	1.01	-11.267
	40%	5.61E+07	1.34	-10.952	1.83E+07	1.00	-14.085
	50%	5.47E+07	1.33	-13.175	1.77E+07	1.00	-16.901
C2 & C4	-50%	7.14E+07	1.42	13.3333	2.79E+07	1.12	30.9859
	-40%	6.95E+07	1.41	10.3175	2.61E+07	1.1	22.5352
	-30%	6.77E+07	1.41	7.4603	2.46E+07	1.09	15.4930
	-20%	6.61E+07	1.39	4.9206	2.33E+07	1.07	9.3897
	-10%	6.45E+07	1.39	2.3809	2.20E+07	1.05	3.2864
	10%	6.18E+07	1.39	-1.9047	2.04E+07	1.04	-4.2250
	20%	6.05E+07	1.4	-3.9683	1.97E+07	1.02	-7.5117
	30%	5.94E+07	1.38	-5.7143	1.90E+07	0.99	-10.798
	40%	5.83E+07	1.37	-7.4603	1.85E+07	0.97	-13.146
	50%	5.73E+07	1.36	-9.0476	1.79E+07	0.95	-15.962
All Cap	-50%	8.80E+07	1.5	39.6825	3.73E+07	1.2	75.117
	-40%	8.13E+07	1.5	29.0476	3.24E+07	1.17	52.113
	-30%	7.57E+07	1.48	20.1587	2.87E+07	1.13	34.742
	-20%	7.09E+07	1.44	12.5397	2.57E+07	1.1	20.657
	-10%	6.67E+07	1.4	5.8730	2.33E+07	1.07	9.3897
	10%	5.97E+07	1.37	-5.2381	1.96E+07	1.01	-7.9812
	20%	5.67E+07	1.35	-10.000	1.81E+07	0.99	-15.023
	30%	5.40E+07	1.33	-14.286	1.69E+07	0.97	-20.657
	40%	5.16E+07	1.31	-18.100	1.58E+07	0.95	-25.823
	50%	4.94E+07	1.3	-21.587	1.49E+07	0.94	-30.047
gm	-50%	4.06E+07	1.44	-35.51	1.21E+07	0.4	-43.05
	-40%	4.58E+07	1.5	-27.30	1.42E+07	0.61	-33.19
	-30%	5.07E+07	1.57	-19.52	1.61E+07	0.81	-24.41
	-20%	5.52E+07	1.47	-12.38	1.78E+07	0.95	-16.43
	-10%	5.94E+07	1.45	-5.715	1.96E+07	1.02	-7.981
	10%	6.65E+07	1.39	5.556	2.29E+07	1.04	7.512
	20%	6.93E+07	1.38	10.00	2.45E+07	1.03	15.023
	30%	7.16E+07	1.37	13.66	2.59E+07	1.03	21.596
	40%	7.31E+07	1.34	16.03	2.72E+07	1.03	27.699
	50%	7.40E+07	1.32	17.46	2.83E+07	1.02	32.863

Table 5. Parametric faults detections in fourth-order LF OTA-C filter.

Component	Deviation	LF Filter					
		Oscillator Stage1			Oscillator Stage2		
		*f*osc (Hz)	Vout (V)	Δ*f*o/*f*o (%)	*f*osc (Hz)	Vout (V)	Δ*f*o/*f*o (%)
C1 & C3	-50%	6.13E+07	1.43	26.915	3.29E+07	1.00	33.198
	-40%	5.77E+07	1.38	19.462	3.05E+07	1.03	23.482
	-30%	5.48E+07	1.35	13.456	2.87E+07	1.04	16.194
	-20%	5.24E+07	1.35	8.4886	2.71E+07	1.05	9.7166
	-10%	5.02E+07	1.32	3.9337	2.58E+07	1.04	4.4534
	10%	4.66E+07	1.29	-3.520	2.38E+07	1.03	-3.644
	20%	4.51E+07	1.28	-6.625	2.29E+07	1.03	-7.287
	30%	4.37E+07	1.26	-9.524	2.21E+07	1.02	-10.53
	40%	4.25E+07	1.25	-12.01	2.14E+07	1.02	-13.36
	50%	4.13E+07	1.23	-14.50	2.08E+07	1.01	-15.79
C2 & C4	-50%	5.75E+07	1.34	19.047	3.26E+07	1.11	31.984
	-40%	5.53E+07	1.33	14.493	3.04E+07	1.15	23.077
	-30%	5.32E+07	1.32	10.145	2.86E+07	1.13	15.790
	-20%	5.14E+07	1.33	6.4185	2.71E+07	1.1	9.7166
	-10%	4.98E+07	1.32	3.1060	2.58E+07	1.07	4.4530
	10%	4.70E+07	1.29	-2.691	2.38E+07	1.01	-3.644
	20%	4.57E+07	1.29	-5.383	2.30E+07	0.98	-6.883
	30%	4.46E+07	1.29	-7.661	2.22E+07	0.94	-10.12
	40%	4.35E+07	1.28	-9.939	2.16E+07	0.9	-12.55
	50%	4.25E+07	1.27	-12.00	2.10E+07	0.85	-14.80
All Cap	-50%	7.25E+07	1.47	50.104	4.25E+07	1.25	72.065
	-40%	6.58E+07	1.44	36.232	3.71E+07	1.21	50.203
	-30%	6.03E+07	1.40	24.845	3.30E+07	1.16	33.603
	-20%	5.57E+07	1.36	15.321	2.97E+07	1.12	20.243
	-10%	5.17E+07	1.34	7.0394	2.70E+07	1.07	9.3117
	10%	4.53E+07	1.29	-6.211	2.28E+07	1.00	-7.692
	20%	4.26E+07	1.27	-11.80	2.12E+07	0.95	-14.17
	30%	4.03E+07	1.24	-16.56	1.98E+07	0.85	-19.84
	40%	3.81E+07	1.22	-21.12	1.86E+07	0.78	-24.69
	50%	3.62E+07	1.21	-25.05	1.75E+07	0.67	-29.15
gm	-50%	2.99E+07	1.13	-38.16	1.45E+07	0.30	-41.29
	-40%	3.38E+07	1.32	-30.02	1.69E+07	0.60	-31.58
	-30%	3.77E+07	1.37	-21.94	1.90E+07	0.78	-23.20
	-20%	4.15E+07	1.36	-14.08	2.09E+07	0.93	-15.51
	-10%	4.50E+07	1.34	-6.830	2.28E+07	1.01	-7.691
	10%	5.14E+07	1.29	6.4182	2.66E+07	1.04	7.8138
	20%	5.40E+07	1.28	11.801	2.84E+07	1.04	14.9798
	30%	5.63E+07	1.27	16.563	3.00E+07	1.03	21.4578
	40%	5.80E+07	1.24	20.082	3.14E+07	1.03	27.1255
	50%	5.92E+07	1.23	22.567	3.26E+07	1.0	31.9838

Table 6. Open-circuit fault detections in fourth-order OTA-C filters.

Osc	Filter Type	Cascade			IFLF			LF		
	SOF in	f_{OSC} (Hz)	Vout (VPP)	$\Delta fo/fo$ (%)	f_{OSC} (Hz)	Vout (VPP)	$\Delta fo/fo$ (%)	f_{OSC} (Hz)	Vout (VPP)	$\Delta fo/fo$ (%)
STAGE 1	C_1	99.8	0.35	185	94.6	1.98	345	99.6	0.35	303
	C_2	84.3	1.49	140	84.4	1.25	296	67.5	1.35	173
	C_1 & C_2	187	1.58	435	187.3	1.61	779	187	1.58	657
STAGE 2	C_3	127	0.82	263	135	0.31	115	148	1.27	206
	C_4	62.5	1.33	79	54.8	1.49	-15	76	1.41	58
	C_3 & C_4	296	1.91	746	296.3	1.93	370	296	1.91	512

SOF = Stuck Open Fault