5-2014

Optimal Control of Energy Efficient Buildings

Cale David Nelson
University of Tennessee - Knoxville, cnelso23@utk.edu

To the Graduate Council:

I am submitting herewith a thesis written by Cale David Nelson entitled "Optimal Control of Energy Efficient Buildings." I have examined the final electronic copy of this thesis for form and content and recommend that it be accepted in partial fulfillment of the requirements for the degree of Master of Science, with a major in Electrical Engineering.

Seddik Djouadi, Major Professor

We have read this thesis and recommend its acceptance:

Judy Day, Husheng Li

Accepted for the Council:
Dixie L. Thompson

Vice Provost and Dean of the Graduate School

(Original signatures are on file with official student records.)

Optimal Control of Energy Efficient Buildings

A Thesis Presented for the

Master of Science

Degree

The University of Tennessee, Knoxville

Cale David Nelson

May 2014

Acknowledgements

I would like to express my sincerest appreciation to my advisor Dr. Seddik Djouadi for suggesting the topic of this thesis, guidance, and support throughout the duration of my thesis.

I would like to thank God for His many blessings that allowed me to accomplish this task. It is truly amazing to think upon how awesome God has blessed my life. I would also like to thank and dedicate this work to my parents David and Sheryl Nelson who have been a source of strength and encouragement for me. I am so grateful for them, and all of the wonderful things they have given me throughout my life. I love them very much. Thank you for all that you have done.

I would also like to thank all of my family, friends, and teachers. I am so thankful for all of the blessings you have given me. You have inspired, and helped me in so many ways. I would like to give special thanks to my friends Xiao Ma and Samir Sahyoun. I deeply appreciate your thoughts and valuable discussions. I wish to thank my grandparents, Robert and Anna Nelson, Ralph and Patricia Martin, my brothers and sister, Zach, Chaeli, and Benjamin, my uncle Ralph Martin for being an incredible part of my life. Lastly, I am so happy and thankful to have Kyle Ann with me as we begin our new life together.

Thank you all. I am blessed, and truly grateful.

Abstract

The building sector consumes a large part of the energy used in the United States and is responsible for nearly 40% of greenhouse gas emissions. Therefore, it is economically and environmentally important to reduce the building energy consumption to realize massive energy savings. Commercial buildings are complex, multi-physics, and highly stochastic dynamic systems. Recent work has focused on integrating modern modeling, simulation, and control techniques to solving this challenging problem. The overall focus of this thesis is directed toward designing an energy efficient building by controlling room temperature. One approach is based on a distributed parameter model represented by a three dimensional (3D) heat equation in a room with heater/cooler located at ceiling. The finite element method is implemented as part of a novel solution to this problem. A reduced order model of only few states is derived using Proper Orthogonal Decomposition (POD). A Linear Quadratic Regulator (LQR) is computed based on the reduced model, and applied to the full order model to control room temperature. Also, a receding horizon constrained linear quadratic Gaussian (LQG) controller is developed by minimizing energy cost of heating and cooling while satisfying hard and probabilistic temperature constraints. A stochastic receding horizon controller (RHC) is employed to solve the optimization problem with the so-called chance constraints governed by probability temperature levels. Furthermore, a constrained stochastic linear quadratic control (SLQC) approach was developed for such purposes. The cost function to be minimized is quadratic, and two different cases are considered. The first case assumes the disturbance is Gaussian and the problem is

formulated to minimize the expected cost subject to a linear constraint and a probabilistic constraint. The second case assumes the disturbance is norm-bounded with distribution unknown and the problem is formulated as a min-max problem. By using SLQC, both problems are reduced to semidefinite optimization problems, where the optimal control may be computed efficiently. Later, some discussions on solving more requirements by SLQC are provided. Simulation and numerical results are given to demonstrate the validity of the proposed techniques shown in this thesis.

Keywords: LQR, FEM, RHC, Control, Energy, Efficient, Building

Table of Contents

List of Figures

Chapter 1

Introduction

BACKGROUND AND OVERVIEW

For centuries the heat equation has been one of the foremost problems focused on by the scientific community. Fourier's solution to the heat equation is a central component to the analysis of numerous problems throughout mathematics and engineering. Now, nearly 2 centuries later, the heat equation continues to constitute the conceptual foundation on which rests the analysis of many physical, biological, and social systems [1].

The impact of his solution has led to the development of many control engineering applications. The study of the heat equation with respect to the parameters defined within the problem by the scientific community has produced many tools and results that can be applied to the physical nature of thermodynamic systems. This includes control, estimation, optimization, system identification, modeling, and simulation techniques coupled with advanced computational methods.

According to the statistics compiled by United Technology Corporation in 2009, the building sector consumes about 40% of the energy used in the United States and is responsible

for nearly 40% of greenhouse gas emissions [5, 6]. Thus, in order to save energy, an important task is to reduce the building energy cost. One key issue for this purpose is the performance of building service systems, which can affect the climate and energy inside buildings. The control objective of buildings' climate is to keep the room temperature in a predefined comfort zone. The sensor in each room samples the temperature and sends back to the control center in the building, from where the control action (cool or heat) is made and then realized by a set of actuators. The goal is thus to optimally design controller which can realize the temperature requirement and minimize energy consumptions.

Buildings are complex multi-scale, multi-physics, and highly uncertain dynamic systems with many sources of disturbances [21]. Whole building simulation presents a formidable computational challenge making the development of design, optimization, and control tools of whole buildings difficult. At a fundamental level, there are several possible approaches to the design and control of high performance buildings. These include: (1) Simulation Based Design, (2) Holistic Fully Integrated Design, and (3) Hybrid Design Methods [5]. Optimal design and control of these systems are very challenging problems and are often done by a simulation based design. This technique first develops a reduced order model on which the design is based and then an optimal solution is pursued [21].

Fundamentally, this problem can be viewed as a complex thermodynamic system composed of heat transfer and heat flow physics. When one considers the heat equation coupled with laminar flow (including boundary conditions, parameters, etc.) they are faced with a computationally expensive problem. So not only is there an immense interest in finding an optimized solution for the heat equation but also on model reduction methods which simplify the solution.

Many engineering applications focus on boundary control problems because of sensor placement restrictions. Employing this knowledge combined with control theory and modeling techniques allow engineers to develop effective solutions for a real time control process in a building environment. It is necessary to consider these restrictions since this physical system have boundary surfaces such as walls, floors, ceilings, etc. exist, and other spatial limitations corresponding to observing a given system. Therefore, it is necessary to implement a boundary control based solution.

Reduction of building energy requires the development of highly efficient heating and cooling systems, which are more challenging than conventional systems [24]. The control task is to keep the room temperature as well as CO_2 and illuminance levels within a predefined comfort range, which can be fulfilled with a set of different actuators. The actuators differ in terms of response time and effectiveness, in their dependence on weather conditions (e.g. cooling tower or blinds), and in energy costs. The goal is to optimally choose the actuator settings depending on weather conditions in order to fulfill the comfort requirements and minimize energy costs [5].

Many studies have implemented LQR Control, LQG Control, PID, and adaptive control among many other methods by utilizing the states, estimates, and other parameters of HVAC systems. For example, it is common for PID controllers to be used as an effective control for these systems. In recent work, robust controllers with tuned cascading or neural network PID based controllers can be designed to enhance the performance of HVAC systems [1]. Other studies have shown that an algorithm that uses simple user input and adapts to changing office occupancy or ambient temperature in real time adaptive HVAC control can save a significant amount of energy [2]. However, since LQR is a control scheme that provides the best possible

performance with respect to some given measure of performance[4] it is widely implemented in optimized, linear or nonlinear dynamic systems.

In addition to the many different control practices developed, modified, and applied to this problem there also exists a variety of model reduction and system identification methods used in this area. Among the multitude of model reduction techniques, the proper orthogonal decomposition (POD) [13] is arguably the most popular method used in deriving reduced models for fluid flows governed by partial differential equations (PDEs) for simulation or control purposes. The approach is based on simplifying the PDE into an approximating system of ordinary differential equations, which are then numerically integrated using standard techniques such as Euler's method, Runge-Kutta, etc. In solving PDEs, the main challenge is to create an equation that approximates the equation to be studied, but is numerically stable, such that errors in the input and intermediate calculations do not accumulate and make the resulting output to be meaningless. The finite element model comprises thousands of states (18182) and therefore is not directly amenable to control design. This is due to the fact that the systematic design of optimal controllers based on the full order model results in the former having the same dimension, i.e., thousands of states. This is computational expensive and not feasible in real time. The order of the model needs to be first reduced and then a controller is designed based on the reduced model, and applied to the full order system to control the heat/cooling systems.

To operate buildings more efficiently so that they are energy and cost effective, predictive integrated room automation can be used instead of conventional room automation. For instance, a predictive integrated room automation controllers can operate the buildings' passive thermal storages based on predicted future disturbances (e.g. weather forecast) by making use of low cost energy sources [22]. One objective of this work is to design a receding

horizon predictive controller in order to minimize cost of heating and cooling a building's rooms, while satisfying temperature constraints, imposed for occupants' comfort. The use of receding horizon control for building climate control is motivated by the fact that the plant is heavily influenced by external factors that can, to some extent, be forecast, e.g. the weather and occupants' behavior.

Model-based predictive control (MPC) has the ability to anticipate future events and can take control actions accordingly. PID and LQR controllers do not have the predictive ability to dynamically react to system changes in this fashion. Model predictive controllers rely on dynamic models of the process obtained by system identification. MPC utilizes the system constraints that can be implemented in the controller, and effectively and efficiently control the system, and therefore it is ideal to incorporate this method here.

In addition to the references cited above several other studies have focused on control of energy costs in building systems by applying a model-based predictive control (MPC) of thermal energy storage in building cooling systems [20]. The cooling systems are modeled as a nonlinear state-space model, and the cost function is quadratic in both energy price and control variables. Also, some studies have considered the estimation and control for a distributed parameter model of a multi-room building [25]. The goal in that study was to implement a control design in the room by using distributed parameter control theory. The system was governed by the Navier-Stokes equation and a linear quadratic regulator (LQR) controller was designed. Moreover, [27] employed stochastic MPC technique to compute the control strategy for a cost function which was linear in the control variable for the thermal dynamics in a linear state-space model which described thermal energy and temperatures. Rule based control and performance bound methods

are also used in [27] as benchmarks to MPC schemes. Previous works [24] used a simplified building climate plant proposed by [22] and employed periodic MPC control law design.

The model given in [24] was validated and compared to simulations with a well-known software for buildings and HVAC systems, TRNSYS. The methods for constrained quadratic control of room temperature on a building climate dynamical were employed for this model. Constrained LQR and RHC techniques were developed to solve stochastic optimization problems. Stochastic RHC is used to solve the problem with chance constraints. The problem was first formulated with hard constraints, then the constraint was relaxed with a predefined probability as formulated in [23]. In contrast to the periodic MPC developed in [24], the controllers here are developed by minimizing the cost of heating and cooling, while satisfying temperature constraints imposed for occupants' comfort.

In this work, further consideration is given to the same building climate plant in [24]. We study a quadratic cost function in terms of temperature errors and control inputs, which is subject to several constraints on the room temperature and control input. In particular, we consider two different cases. The first case assumes the disturbance is Gaussian and the problem is formulated to minimize the expected cost subject to a linear constraint on control input and a probabilistic constraint on the state. The latter constraint can be reduced to a hard constraint on control input exactly [31]. The second case assumes the disturbance is norm-bounded with distribution unknown and the problem is formulated as a min-max problem. By using the SLQC approach proposed in [31], the optimal solutions of problems in both cases may be solved via semidefinite programming exactly. Moreover, we also provide some discussions such that some other requirements related to energy efficient buildings may be augmented without introducing any complexity to the problems.

Additionally, [30] proposed a tractable approximation method for the problem. Both schemes in [27] and [30] considered chance constraints and solved them by using affine disturbance feedback. However, unlike [27] and [30], the chance constraint is simplified to a hard constraint exactly without using affine disturbance feedback. Furthermore, this work considers a stochastic quadratic cost function, which is taken expectation with respect to Gaussian disturbances in the first case, and is maximized over the bounded set of disturbances in the second case. The disturbance is non-convex and hard to resolve directly, but it can be approximated and formulated as a min-max problem. Moreover, the cost function includes both quadratic forms of temperature errors and control input, which means the optimal control is designed to find a compromise between them. Lastly, the problems are formulated into semidefinite optimization problems which may be solved through SDP for the optimal solutions efficiently.

CONTRIBUTIONS

Contributions of the research in this work are summarized here:

1. Developed a modeling and control approach for room temperature in buildings by employing a distributed parameter model coupled with high performance computing, and modern control theory to regulate room temperature.

2. Numerically solved the heat transfer problem for the room geometry using the Finite Elements technique to formulate the full order model of the problem.

3. The full order model for the room temperature is controlled by implementing Linear Quadratic Regulator (LQR).

4. Derivation of the reduced model using Proper Orthogonal Decomposition (POD) and then apply the control to the reduced model. These results are compared with the full order model control.

5. A linear quadratic Guassian (LQG) controller and receding horizon controller (RHC) for with linear and probabilistic constraints are designed with an optimal solution and applied to HVAC systems and building model.

6. SLQC method was developed to solve stochastic optimization problems by semidefinite programming. This approach is considered for a stochastic quadratic cost function with Gaussian disturbances, and in the second case assumes the disturbance is norm-bounded with distribution unknown.

THESIS ORGANIZATION

Chapter 2 introduces the existing concepts of proper orthogonal decomposition (POD) and The heat transfer problem for the room geometry was solved numerically solve the by using the Finite Elements technique to formulate the full order model of the problem. Attention is given to the boundary conditions, basis function, and derivations for the finite element solution of the 3D heat equation problem. Optimal sensor location is addressed for the control design. Also, in this section we controlled the full order model for the room temperature using the Linear Quadratic Regulator (LQR).

Chapter 3 extends the techniques of Chapter 2 for reduced order systems. This chapter presents the design methodology for the linear-quadratic regulator controller using the boundary feedback control laws for the resultant finite dimensional system described by the heat equation and shows how the Finite Element Method of snapshots and the analytical computation of the POD modes for systems described by partial differential equation can be implemented in this system. Distributed parameter theory is shown to provide useful information about building design and control. In this chapter, we reduce the model using Proper Orthogonal Decomposition (POD) and then apply the control to the reduced model. The step response for both full and reduced controlled system is shown, and we compare the results from reduced order with the full order model control.

Chapter 4 focuses on constrained quadratic control of room temperature on a building climate dynamical model. The building climate model is described and we introduced the constrained quadratic control techniques used in this work. Constrained LQR and RHC are employed to solve stochastic optimization problems, and stochastic RHC is used to solve the

problem with chance constraints. Simulation results are given and show the performance of the methods in controlling the building climate.

Chapter 5 introduces the concept of constrained stochastic linear quadratic control (SLQC) and show how implementing a semidefinite programming approach yields optimal control to this problem. SLQC is used to compute the optimal control solution for the building model subject to linear inequality constraints and additional case with disturbance that is norm-bounded with an unknown distribution. The SLQC approach is used to solve the optimal solutions of problems in both cases via semidefinite programming. The second problem is formulated as a min-max problem and the SDP is compared with LQR. Simulation results to show the performance of the methods in controlling the building climate.

Chapter 6 discusses the thesis contributions, and recommendations for future research. Concluding thoughts on extending a rigorous study of air flow dynamics and optimal sensor location are provided. Additional notes on applying constrained quadratic control in future work that focuses on robust control strategy with chance constraints are also given. Moreover, discussions on SLQC such that some other requirements related to energy efficient buildings are presented.

Chapter 2

Control and Room Temperature Optimization of Energy Efficient Buildings

Many modern technologies employ a control method from a wide variety of sophisticated approaches to address energy efficiency and financial costs. In recent years, the control community has placed significant interest placed in the science of whole building simulation, and reducing building energy consumption. However, this is a very challenging problem due to the complexity of these dynamic systems. The finite element technique is a numerical method that creates a mathematical representation of a physical system and finds approximate solutions of partial differential equations. The Finite Element Method solves PDEs by dividing the model into a mesh and captures the behavior of each element that is stable. It is an extremely valuable tool engineers can use to evaluate complex domains when precision varies or the solution lacks smoothness [8], [9], [10]. This analytical tool is widely used in vibration analysis, fluid dynamics, and thermodynamic analysis. Also, in this section we controlled the full order model for the room temperature using the Linear Quadratic Regulator (LQR).

HEAT TRANSFER PROBLEM

In this section, we formulate the problem and numerically solve the heat transfer problem for the room geometry using the Finite Elements technique to formulate the full order model of the problem.

PROBLEM FORMULATION

The cooling and heat flow are modeled by a 3-dimensional (3D) heat equation [11]

$$\rho C_p \frac{\delta T(t,x,y,z)}{\delta t} + \nabla\big(-k\nabla T(t,x,y,z)\big) = Q \tag{2.1}$$

where t denotes time, x, y, z are spatial coordinated assumed to belong to a domain Ω which represents the room geometry

ρ is the density in lb/ft^3

C_p is the specific heat capacity at constant pressure in $J / lb \cdot F$

T is absolute temperature in F

k is thermal conductivity in $w / lb \cdot F$

Q is the heat source in w/ft^3

The initial temperature is 40 F. Boundary condition at the center of the top surface is a fixed temperature at 150 F.

The domain of the 3D heat equation Ω is the room geometry,

- The initial conditions at $t = t_o$ is

$$T(x,y,z,t_o) = T_o(x,y,z) in\ \Omega \tag{2.2}$$

- Dirichlet type boundary condition:

$$T(x, y, z, t) = \hat{T}(x, y, z) in\ \delta\Omega \tag{2.3}$$

- Neumann type boundary condition

$$q(x, y, z, t) = \hat{q}(x, y, z) in\ \delta\Omega \tag{2.4}$$

where $q := -k\nabla T$ is the heat flux, $\delta\Omega_T$ and $\delta\Omega_q$ are Dirichlet and Neumann boundaries respectively as shown in Figure 1.1 where $\delta\Omega = \delta\Omega_T \cup \delta\Omega_q$.

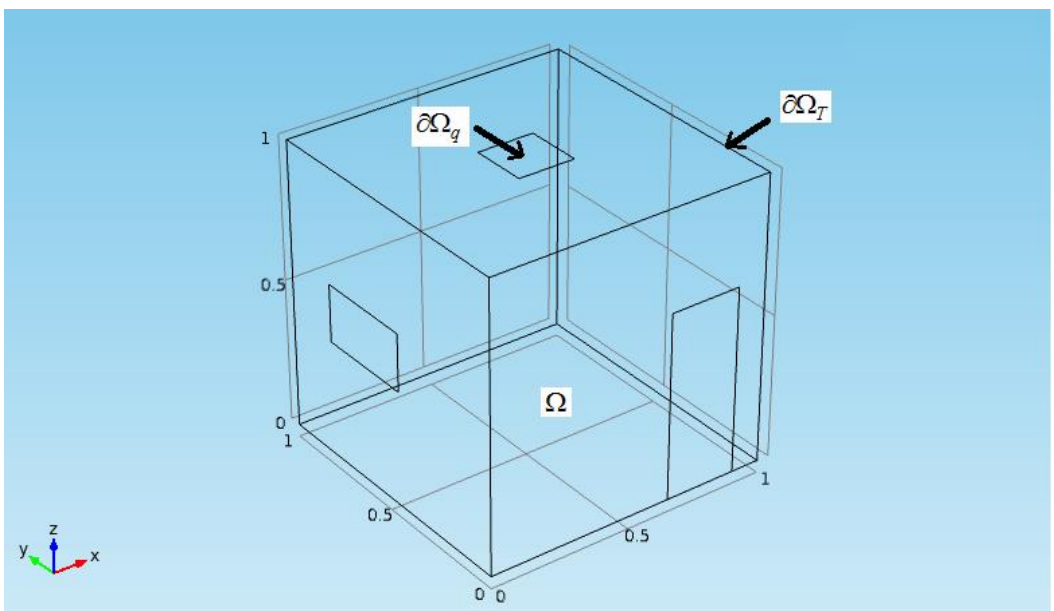

Figure 2.1. Room Geometry.

FINITE ELEMENT SOLUTION OF THE 3D HEAT EQUATION PROBLEM

The 3D heat equation is multiplied by a basis function δT and integrated over the domain Ω as follows:

$$\int_{\Omega} \rho C_p \, T \, \delta T + \int_{\Omega} \nabla(-k\nabla T) \, \delta T = 0 \tag{2.5}$$

The basis function δT has the following property:

$$\delta T = 0 \; in \; \delta\Omega_T \tag{2.6}$$

Using the divergence theorem

$$\int_{\Omega} \nabla(-k\nabla T) \, \delta T = \int_{\Omega} \nabla(-k\nabla T \delta T) - \int_{\Omega} (-k\nabla T) \, \nabla\delta T$$

$$= \int_{\delta\Omega} (-k\nabla T \delta T n_i) - \int_{\Omega} (-k\nabla T) \, \delta T \tag{2.7}$$

Using the Neumann boundary condition (2.4) and the basis function property (2.6) we have:

$$\int_{\delta\Omega} (-k\nabla T n_i \delta T) = \int_{\delta\Omega_q} (-k\nabla T n_i \delta T) + \int_{\delta\Omega_T} (-k\nabla T n_i) \, \delta T$$

$$= \hat{q}(x,t) \tag{2.8}$$

Then the weak formulation of the problem follows

$$\int_{\Omega} \rho C_p \, \dot{T} \, \delta T - \int_{\Omega} q \nabla\delta T + \int_{\delta\Omega_q} \hat{q} \, \delta T = 0 \tag{2.9}$$

The spatial approximation of solution in the domain Ω is performed by a linear combination of shape functions $\varphi_s = \varphi_s(x)$, where

$$T(x,t) = \theta_s(t) \, \varphi_s(x) \quad where \; s = 1, \dots, N \tag{2.10}$$

where N is the total number of solution nodes and $\theta_s(\mathrm{t})$ is the time dependent coefficients. The basis function is also approximated:

$$\delta T(x) = \theta_r(t)\varphi_r(x) \tag{2.11}$$

Since the basis function is time independent, $\theta_r$coefficients will only be numbers. Substitute in the weak form (2.8) and after some derivations; we get the system of ordinary differential equations (ODEs) as follows

$$M_{rs}\,\dot{\theta}_s = K_{rs}\,\theta_s + \int_{\delta\Omega} \hat{q}\varphi_r \tag{2.12}$$

where

$$M_{rs} = \int_{\Omega} \rho C_p\,\varphi_s\varphi_p\,dxdydz$$

is the thermal capacity matrix and

$$K_{rs} = \int_{\Omega} \left(-k\nabla\varphi_s + \rho C_p\,u_i\varphi_s\right)\nabla\varphi_r dxdydz$$

is the heat transfer matrix. The system in (2.12) can then be written in state space form as

$$\dot{x} = Ax + Bu \tag{2.13}$$

where $A := {M_{rs}}^{-1}\,K_{rs}$, $B := {M_{rs}}^{-1}\,K_{rs}\,and\ x := \theta_s$.

The plot of one snapshot of the 3D heat diffusion in the room using finite element analysis with the corresponding mesh is shown in Fig 3. One heating/cooling element is assumed to be installed in the room ceiling. Finite element solution at different times is shown in figures 2.3, 2.4, 2.5 and 2.6.

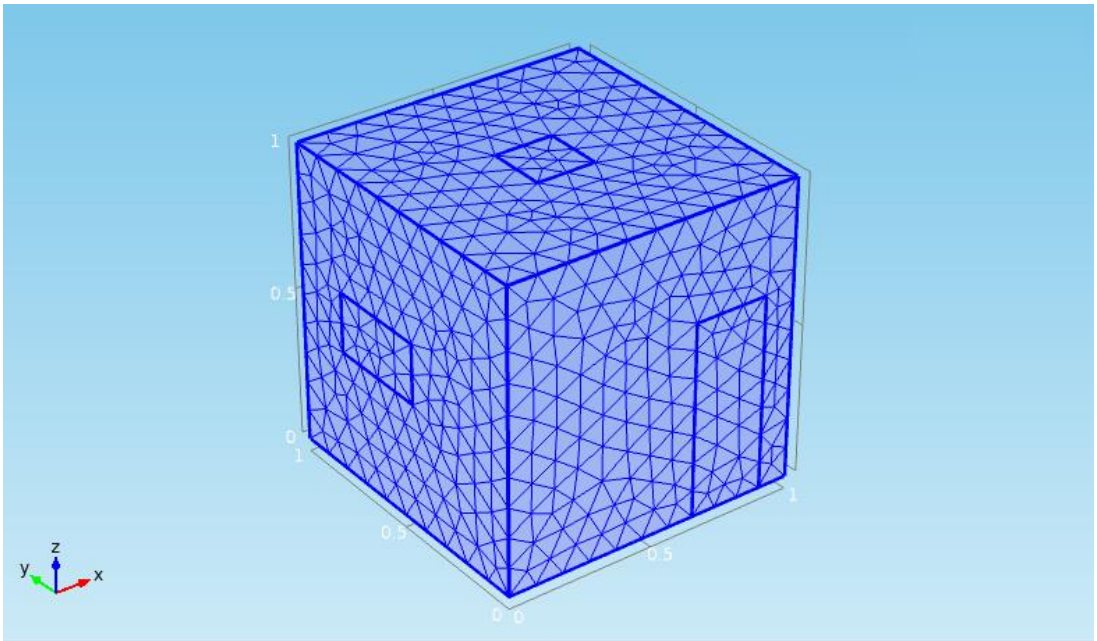

Figure 2.2. The 3D heat equation with corresponding finite element mesh. Number of mesh nodes = number of states = 18182 nodes.

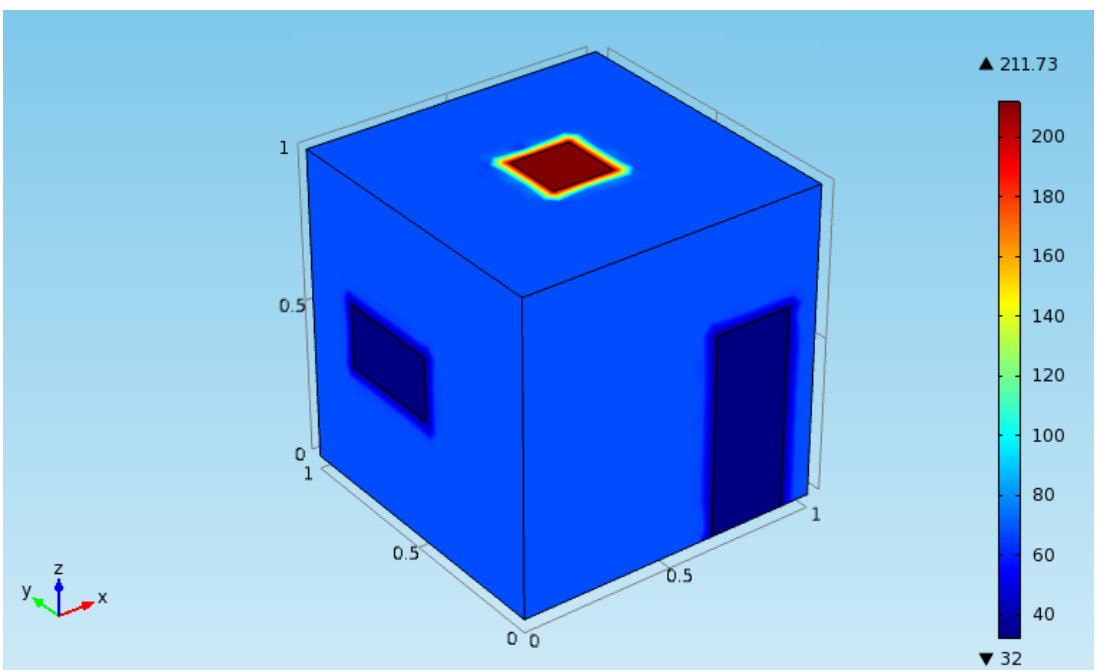

Figure 2.3. Temperature distribution (in °F) after 1 minute.

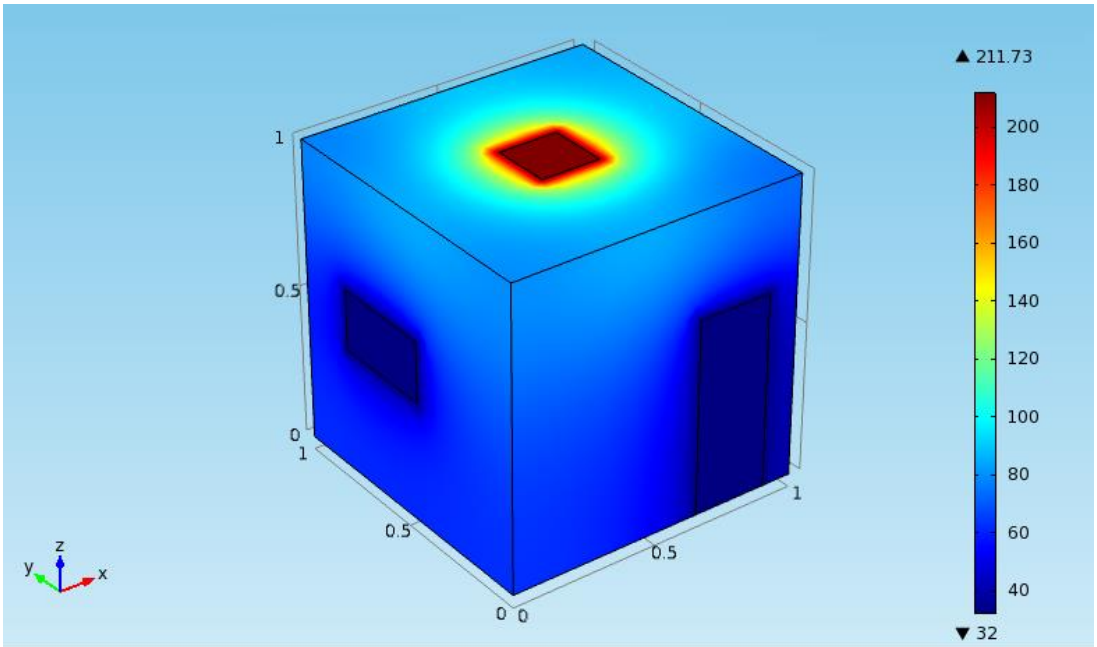

Figure 2.4. Temperature distribution (in °F) after 20 minutes.

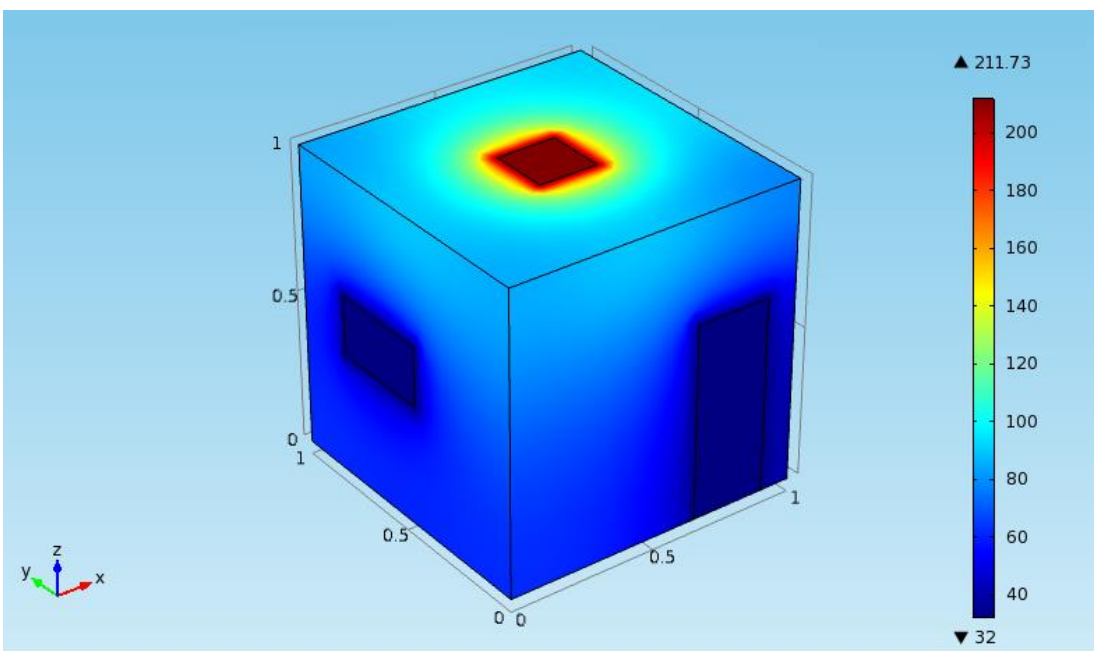

Figure 2.5. Temperature distribution (in °F) after 40 minutes.

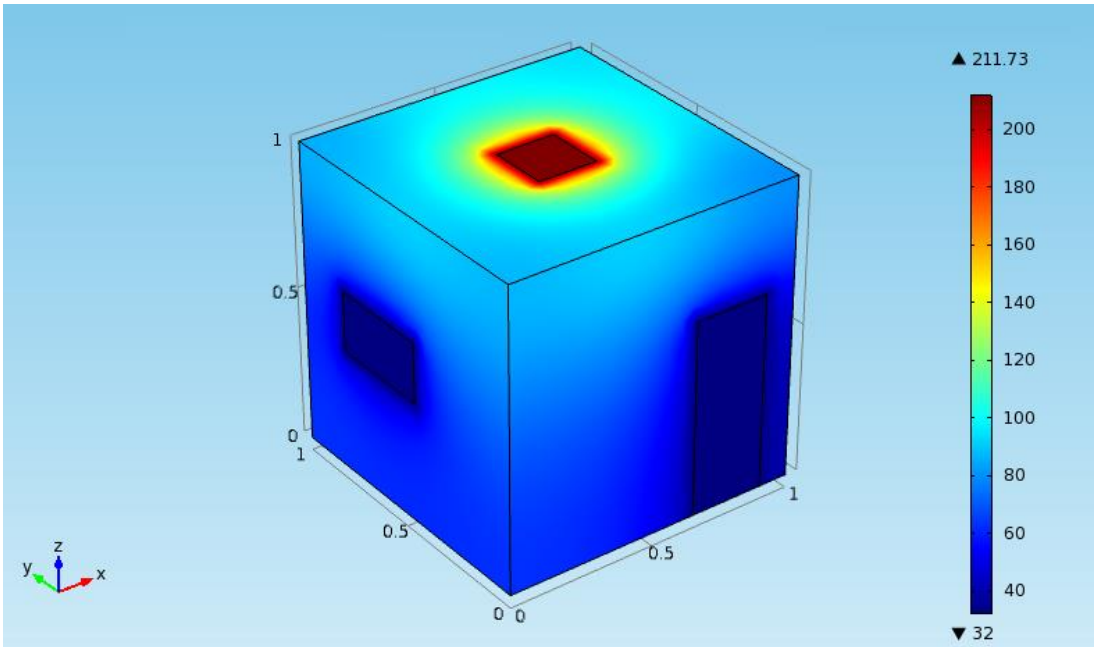

Figure 2.6. Temperature distribution (in °F) after 60 minutes.

TEMPERATURE CONTROL

A linear quadratic regulator (LQR) controller [12] is designed to keep the room temperature at the desired value. The control design is based on the reduced order model and applied to the full order system of the form

$$\dot{x} = Ax + Bu$$

where x is the states vector that contains 18182 temperature values at the nodes shown in the mesh figure. The sensor location is chosen at (04, 0, 0.5), so the measurement equation has the following form:

$$y = Cx$$

where $C = [\,000 \ldots 1..00]$ is a vector of zeros everywhere except for the sensor location node where the value is 1. Note that we assumed the temperature is measured by only one sensor. One of the main issues arising in automatic control of room temperature is the best location of sensors in order to effectively estimate the temperature, especially in the context of using distributed parameter models. From a general point of view, the problem of optimal sensor location can be viewed as the problem of maximizing the output generated by a given state [15], [16]. In room temperature control it is no possible to sense inside the flow domain and full state estimation is not practical. For such problems, the sensors must be located on the boundary, in our case, somewhere on the room walls. In this work, we rely on a search over the domain boundary $\delta\Omega$ for candidate locations to determine the best sensor position. In our simulation the best sensor location is represented in Figure 2.7.

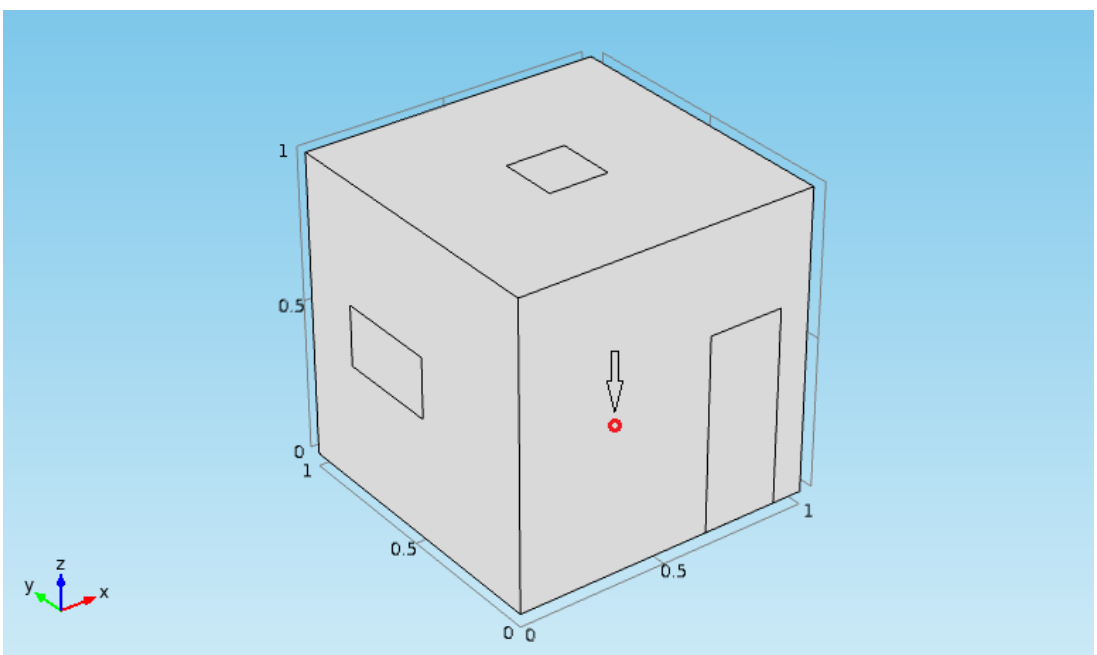

Figure. 2.7. Sensor Location.

LQR controller is used as follows: the state-feedback law $u = -Kx$ minimizes the quadratic cost function:

$$J(u) = \int (x^T Q x + u^T R u) dt \tag{3.1}$$

Subject to the system dynamics $\dot{x} = Ax + Bu$ figure 3.2 shows the step response for two different desired values of $70^\circ F$ and $83^\circ F$.

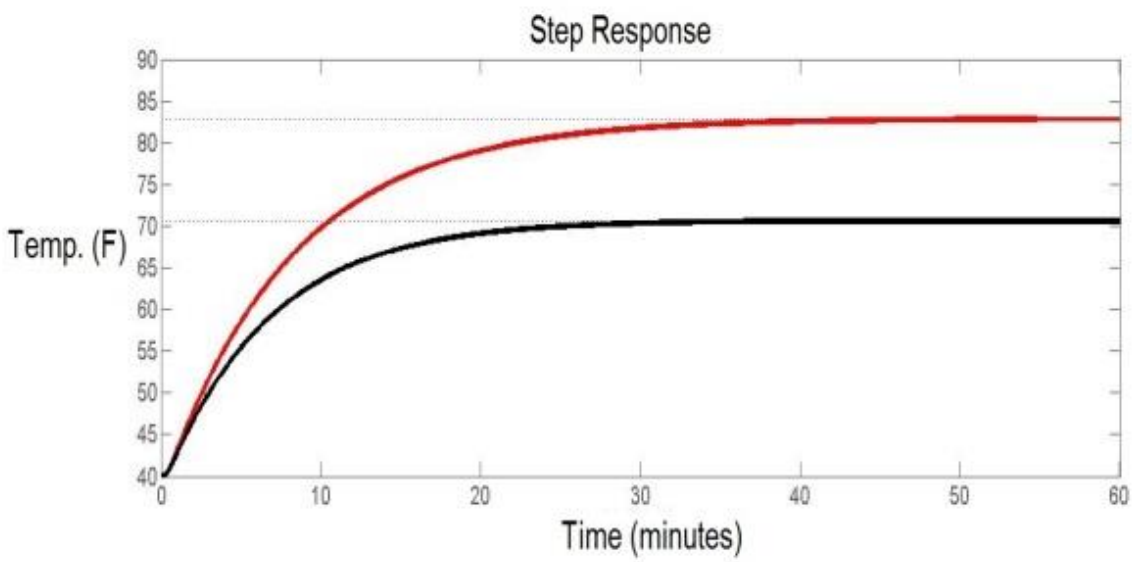

Figure 2.8. Step response for 2 desired set points $70^\circ F$ and $83^\circ F$.

Note that the closed-loop response is stable and tracks the set points. The corresponding control input is plotted in the Figure 3.3. A constraint for the input signal to be bounded between 40 F and 150 F is added to account for heating/cooling systems' saturation.

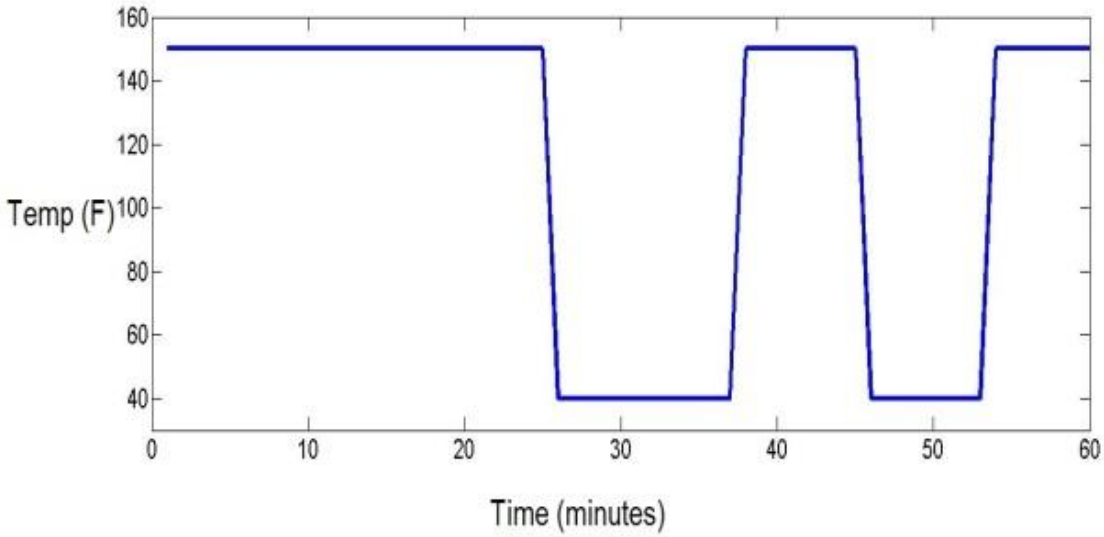

Figure 2.9. Control Input.

Chapter 3

Boundary Feedback Control from Reduced Order Systems

A great deal of research in model reduction and POD for reduced-order modeling has been performed and they are both well-established areas of research in the scientific community. It is arguably the most popular method used in deriving reduced models for simulation or control of PDEs [17]. The goal of any model reduction technique is to accurately and efficiently identify a reduced-order model with the least number of states possible while keeping the representation within a given error tolerance. Many studies have shown that POD models can be used to construct a new reduced-order state space representation of a physical system. This is accomplished by obtaining snapshots from experiments or simulations, and constructing basis modes. Then a boundary feedback controller can be designed from reduced-order POD model, and applied to the system.

PROBLEM FORMULATION

With N snapshots in hand the $N \times N$ correlation matrix L is defined by [14]:

$$L_{i,j} = \langle S_i, S_j \rangle \tag{3.1}$$

is constructed, where $\langle\ ,\ \rangle$ denoted the usual Euclidean inner product of snapshots S.

With M denoting the number of POD modes to be constructed, the first M eigenvalues of largest magnitude, $\{\lambda_i\}_{i=1}^{M}$ of L are found. They are sorted in descending order, and their corresponding eigenvectors $\{v_i\}_{i=1}^{M}$ are calculated. Each eigenvector is normalized so that

$$\|v_i\|^2 = \frac{1}{\lambda_i} \tag{3.2}$$

The orthonormal POD basis set $\{\varphi_i\}_{i=1}^{M}$ is constructed according to [12]:

$$\varphi_i = \sum_{j=1}^{N} v_{i,j} S_j \tag{3.3}$$

where $v_{i,j}$ is the jth component of v_i. With a POD basis in hand, the solution T of the distributed parameter model is approximated as a linear combination of POD modes, i.e.,

$$T \approx \sum_{i=1}^{M} \alpha_i \varphi_i \tag{3.4}$$

This shows that POD finds a low dimensional embedding of the snapshots that preserve most of the energy as measured in a much higher dimensional solution space. It is found that taking only the largest 50 eigenvalues keeps 98% of the energy of the full order system. Figures 4.1 and 4.2 show the full order model compared to the reduced order model of 50 modes respectively, both after 40 minutes. Figures 4.3 and 4.4 show the full order model compared to the reduced order model of 50 modes respectively, both after 60 minutes. It is shown from the figures that the reduced order is so close to the full order which means that working with the reduced order is acceptable and reliable.

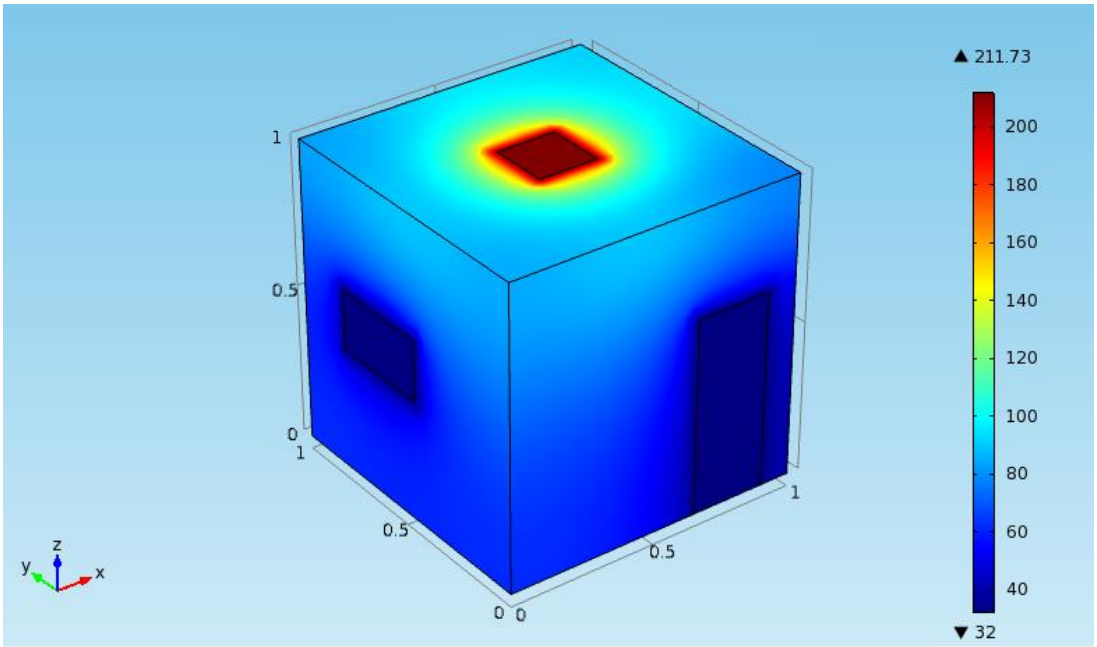

Figure 3.1. Full order model at t = 40 minutes.

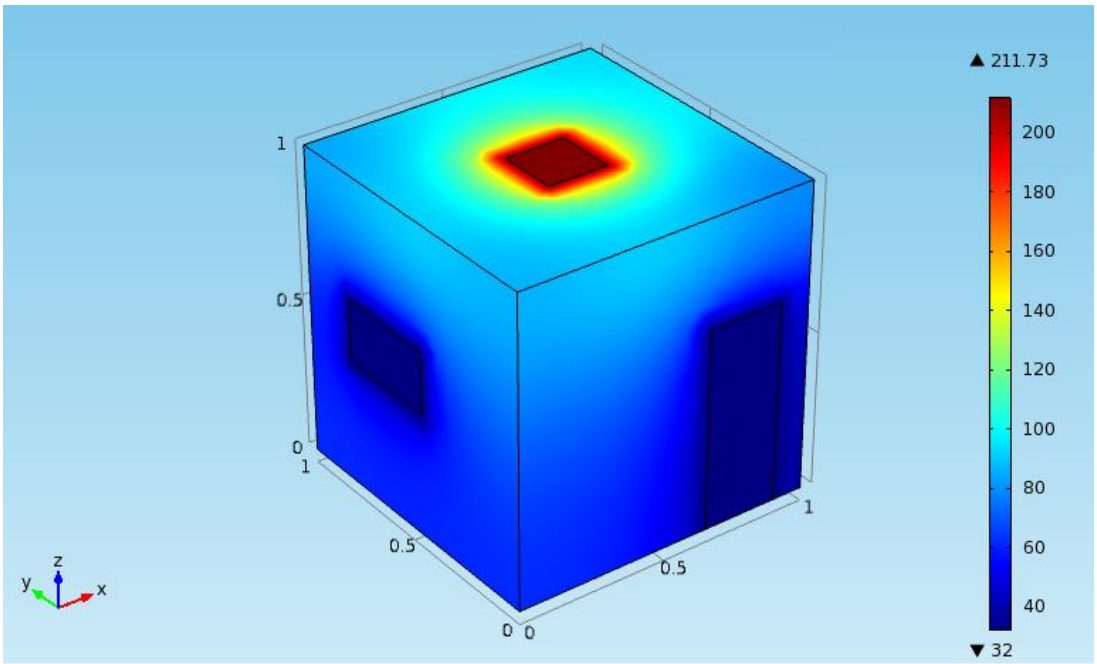

Figure 3.2. Reduced order model at t = 40 minutes.

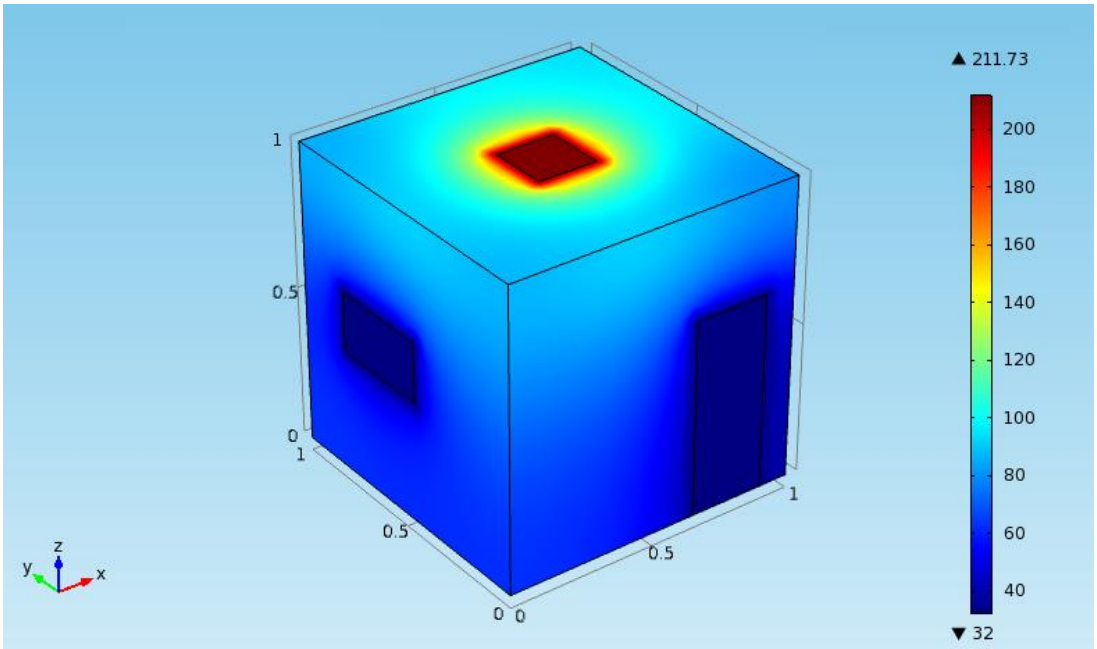

Figure 3.3. Full order model at t = 60 minutes.

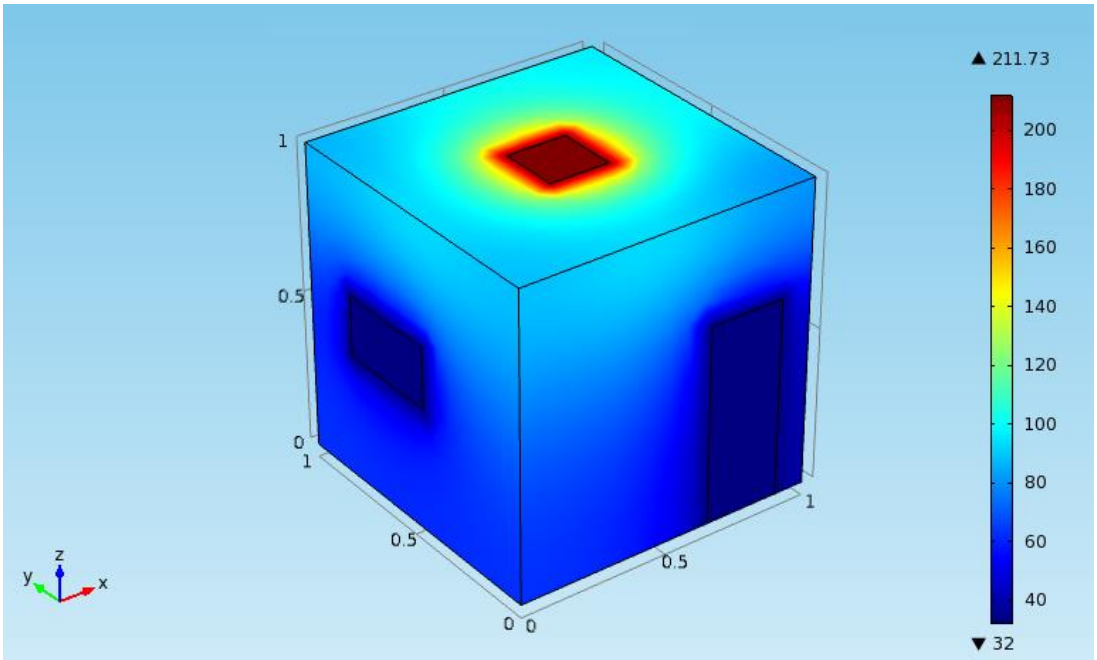

Figure 3.4. Reduced order model at t = 60 minutes.

Step response for both full and reduced controlled system is shown in figure 3.3. The difference lies between 1 or 2 °F which is very acceptable considering the large reduction ration from 18182 states to 50. Figure 3.4 shows the input signal for full and reduced order systems. The reduced order controlled input signal leads or lags the full order controlled input signal by 1 or 2 minutes.

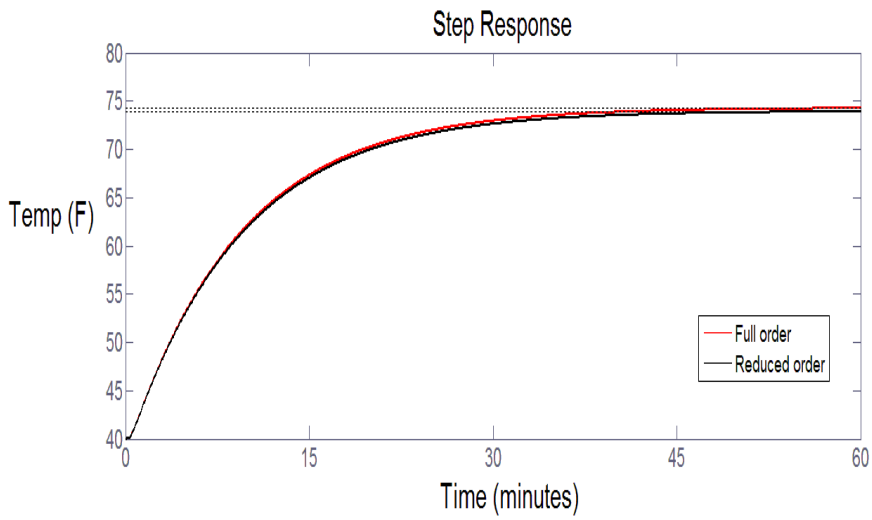

Figure 3.5. Step response for full and reduced order models.

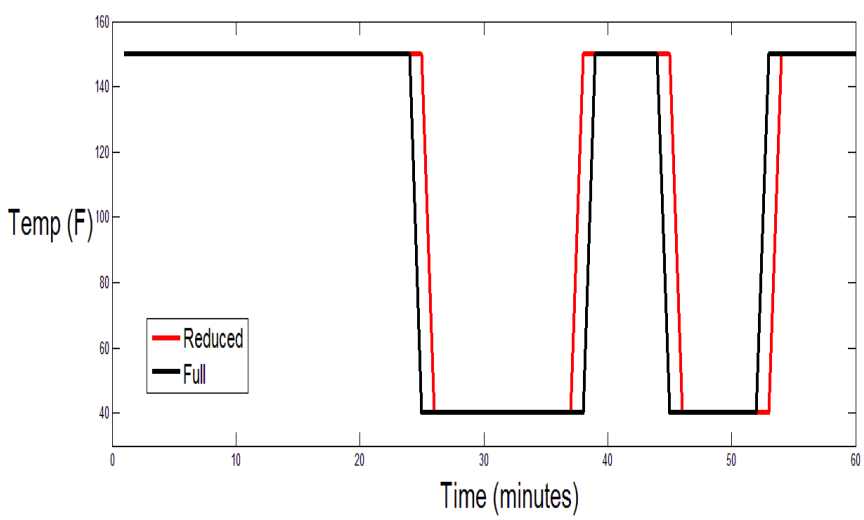

Figure 3.6. Controlled input signal for full order and reduced order controlled systems.

Chapter 4

Constrained Quadratic Control of Energy Efficient Buildings

In order to operate buildings more efficiently so that they are energy and cost effective, predictive integrated room automation has been developed to replace conventional room automation. For instance, a predictive integrated room automation controller can operate based on a buildings' passive thermal storages based on predicted future disturbances (e.g. weather forecast) by making use of low cost energy sources [22]. Model-based predictive control (MPC) has the ability to anticipate future events and can take control actions accordingly. MPC utilizes the system constraints that can be implemented in the controller, and effectively and efficiently control the system, and therefore it is ideal to incorporate this method here. A receding horizon constrained linear quadratic Gaussian (LQG) controller is developed by minimizing the energy cost while satisfying hard and probabilistic temperature constraints imposed for occupants' comfort. A stochastic receding horizon controller (RHC) is employed to solve the optimization problem with the so-called chance constraints governed by probability temperature levels.

BUILDING SYSTEM MODEL

The system model used in this work was proposed in [22] and employed in [23]. The continuous-time dynamics of the room temperature, interior-wall surface temperature, and exterior-wall core temperature, can be represented as follows:

$$i_1 = \frac{1}{C_1}\,[(K_1 + K_2)(t_2 - t_1) + K_5(t_3 - t_1) + K_3(\delta_1 - t_1) + u_h + u_c + \delta_2 + \delta_3]$$

$$i_2 = \frac{1}{C_2}\,[(K_1 + K_2)(t_1 - t_2) + \delta_2]$$

$$i_3 = \frac{1}{C_3}\,[K_5(t_1 - t_3) + K_4(\delta_1 - t_3)]$$

where the parameters in the model above are:

t_1: Room air temperature °F
t_2: Interior wall surface air temperature °F
t_3: Exterior wall core temperature °F
u_h : Heating power (≥ 0) kW
u_c : Cooling power (≤ 0) kW
δ_1: Outside air temperature °F
δ_2: Solar radiation kW
δ_3: Internal heat sources kW

$C_1 = 9.356 \times 10^5$ kJ/°F
$C_2 = 2.970 \times 10^6$ kJ/°F
$C_3 = 6.695 \times 10^5$ kJ/°F
$K_1 = 16.48$ kW/°F
$K_2 = 108.5$ kW/°F
$K_3 = 5$ kW/°F
$K_4 = 30.5$ kW/°F
$K_5 = 23.04$ kW/°F

The system states are the room air temperature t_1, interior wall surface temperature t_2, and exterior wall core temperature t_3. The control signals u_h and u_c represent heating and cooling power, and they can be combined as one variable $u = u_h + u_c$ because heating and cooling are not simultaneous. For more details about this model, please refer to [22, 23].

Define the state vector x, the control signal vector u, and the environment stochastic disturbance vector d as:

$$x := \begin{bmatrix} t_1 \\ t_2 \\ t_3 \end{bmatrix}, u := \begin{bmatrix} u_h \\ u_c \end{bmatrix}, d := \begin{bmatrix} \delta_1 \\ \delta_2 \\ \delta_3 \end{bmatrix}$$

The state-space model can then be written compactly as:

$$\dot{x} = Ax + B_1 u + B_2 d \tag{4.1}$$

where

$$A := \begin{matrix} -\frac{1}{C_1}(K_1 + K_2 + K_3 + K_5) & \frac{1}{C_1}(K_1 + K_2) & \frac{K_5}{C_1} \\ \frac{K_1 + K_2}{C_2} & \frac{-(K_1 + K_2)}{C_2} & 0 \\ \frac{K_1}{C_3} & 0 & \frac{-(K_5 + K_4)}{C_3} \end{matrix}$$

$$B_1 := \begin{matrix} \frac{1}{C_1} + \frac{1}{C_2} \\ 0 \\ 0 \end{matrix}$$

$$B_2 := \begin{matrix} \frac{K_3}{C_1} & \frac{1}{C_1} & \frac{1}{C_1} \\ 0 & \frac{1}{C_2} & 0 \\ \frac{K_4}{C_3} & 0 & 0 \end{matrix}$$

The following constraints are imposed on the temperatures during a day to satisfy the requirement:

$$t_1 \geq \begin{cases} 69.8\ °\text{F} & from\ 8am\ to\ 6pm \\ 66.2\ °\text{F} & otherwise \end{cases} \tag{4.2a}$$

$$t_1 \leq \begin{cases} 78.8\ °\text{F} & from\ 8am\ to\ 6pm \\ 86\ °\text{F} & otherwise \end{cases} \tag{4.2b}$$

$$0 \leq u_h \leq 200 \quad , \quad -50 \leq u_c \leq 0$$

Thus, the control constraint can be written in terms of u as:

$$-50 \leq u \leq 200 \tag{4.3}$$

From above constraints, we can observe that both the room air temperature and control signal are constrained. In the next section, the control problem is formulated.

PROBLEM FORMULATION

We consider the problem where the temperature t_1 is required to remain within certain bounds of a constant reference t_r in the presence of the disturbance vector d. And we can also assign set points for both t_2 and t_3, but without any other constraint on them. Thus, we can regulate the output error $e := x - x_r$, where x_r is the set point vector of x. Our objective is to find for the system (1) discretized, the M-control sequence $\{u_0; \cdots ; u_{M-1}\}$, where $u_i := u(t_i), i = 0; \cdots ; M$; $t_i = i\Delta T$, where ΔT is the sampling period; and corresponding state sequence $\{x_0; \cdots ; x_{M-1}\}$ and error sequence $\{e0; \cdots ; e_M - 1\}$, that minimize the finite horizon objective function:

$$V_N\ (\{x_k\}, \{u_k\}, \{e_k\}) := \frac{1}{2} E[(x_N - x_r)^T P (x_N - x_r) + \sum_{k=0}^{N-1} e_k^T Q e_k + \sum_{k=0}^{N-1} u_k^T R u_k)]$$

where $E(\bullet)$ denotes the expectation operator, $P \geq 0; Q \geq 0$ (i.e., semi-definite positive matrices), $R > 0$ (i.e., positive definite matrix), N is the prediction horizon, $M \leq N$ is the control horizon, subject to the constraints.

The cost function in this form can be explained as minimizing the temperature errors as well as saving energy. The first problem is formulated with hard constraints (2) and (3).

Problem 1

$$u_k(x_0) := \arg min_u V_N$$

subject to (2), (3), and discretized version of (1) (4.4)

The second problem is formulated with the constraints under the predefined probability to further reduce the energy consumption as temperature comfort is a little relaxed. The constraints with probability can be defined as [23]:

$$P[G_i x \leq g_i] \geq 1 - \alpha_i$$
$$P[F_i x \leq f_i] \geq 1 - \beta_i$$

(4.5)

where

$$x := [x_0^T, \dots, x_N^T]^T$$

$$u := [u_0^T, \dots, u_{N-1}^T]^T$$

(4.6)

G_i;gi;F_i; f_i are matrices with proper dimensions; and α_i;$\beta_i \in [0;1]$ denote the probability level.

Based on this, we can formulate the second problem as:

Problem 2

$$u_k(x_0) := \arg min_u V_N$$

(4.7)

subject to (5) and discretized version of (1).

Problem 1 will be addressed with both LQG and RHC methods, while for Problem 2, we will transform it to a convex deterministic second-order cone program (SOCP) and solve it with RHC later.

CONTROL STRATEGIES

In this section, we will introduce the control techniques used in this work. We assume that the control center of the building has full state information, i.e., reading from sensors or using a Kalman Filter providing the system is observable.

Then, the control signal will be a function of states.

Linear Quadratic Gaussian Regulator

First, the discretized system can be written as follows:

$$\dot{x} = A_d x_k + B_d u_k + C_d d_k \tag{4.8}$$

The LQG controller designed here employs a simple strategy, first compute the LQG control signal which minimizes the cost function, after which the control constraint (3) is applied. That is, if the LQG control signal exceeds the range of the constraint, then it will be cut off from above or below. The discrete-time LQG can be computed as follows [25]:

$$u_k^* = -K_k(x_k - x_r) \tag{4.9}$$

where

$$K_k = (R + B_d^T P_k B_d)^{-1} B_d^T P_k A_d \tag{4.10}$$

and *Pk* is calculated iteratively backwards in time by the dynamic Riccati equation:

$$P_{k-1} = Q + A_d^T (P_k + P_k B_d^T (R + B_d^T P_k B_d)^{-1} B_d^T P_k) A_d \tag{4.11}$$

from initial condition $P_N = P$.

Then, the constrained control input based on LQG is:

$$u_k \geq \begin{cases} u_k{}^* \; if \; u_1 \; \leq \; u_k \; \leq \; u_2 \\ u_1 \qquad\qquad if \; u_k{}^* \leq u_1 \\ u_2 \qquad\qquad if \; u_k{}^* \geq u_2 \end{cases}$$

(4.12)

where $\beta_1;\beta_2$ are the lower and upper bound of the control signal.

RECEDING HORIZON CONTROL (RHC)

The idea of RHC is to start with a fixed optimization horizon, of length N, with the current state as initial state. The steps of RHC are summarized as follows [26]:

- At some time k, with the state x_k as initial state, solve the optimal control problem over a fixed length N, from $[k;k+N-1]$, taking the current and future constraints into account.
- Apply the control signal u_k corresponding to x_k to the system.
- Compute the state obtained at time k+1.
- Repeat the previous three steps from time k+1.

One method to solve the RHC problem is to utilize geometric arguments. The essential idea depends on the nice geometric interpretation in the control-space [26]. The optimal constrained control depends on which partition the state vector lies in. That is, in different partitions, the control is different. Please refer to [26] for more details.

Note that the different between the RHC used in this work and the periodic MPC in [24] is that the latter requires a periodicity of the room temperature, thus only one day (24 hours) needs to be considered; while in this work, the RHC applied mainly focuses minimizing the energy cost (control power) and temperature errors (e).

Thus, control inputs can be written as [23]:

$$u_i = \sum_{j=0}^{i-1} M_{i,j} d_j, \quad i = 0, \dots, N-1, \quad j = 0, \dots, N-2 \tag{4.13}$$

In the matrix form it leads to

$$\mathbf{u} = \mathbf{Md} + \mathbf{h}$$

$$\mathbf{M} := \begin{matrix} \mathbf{0} & \cdots & \cdots & \mathbf{0} \\ \boldsymbol{M_{1,0}} & \mathbf{0} & \cdots & \mathbf{0} \\ \vdots & \ddots & \ddots & \vdots \\ \boldsymbol{M_{N-1,0}} & \cdots & \boldsymbol{M_{N-1,N-2}} & \mathbf{0} \end{matrix}$$

$$\mathbf{h} := [h_0^T, \dots, h_{N-1}^T]^T$$

$$\mathbf{d} := [d_0^T, \dots, d_{N-1}^T]^T$$

Also define $\bar{\mathbf{d}} := [\bar{d}_0^T, \dots, \bar{d}_{N-1}^T]^T$. And write the prediction dynamics in the form: $x = \mathbf{A}x_0 + \mathbf{Bu} + \mathbf{Dd}$. Thus, follow [23], the constraints with probability can be equivalently formulated as deterministic second order cone constraints. Moreover,

Problem 2 can be reformulated as a SOCP:

$$\big(\mathbf{M}(x_0), \mathbf{h}(x_0)\big) := \arg min_{(\mathbf{M},\mathbf{h})} \big(\mathbf{M}\bar{\mathbf{d}} + \mathbf{h}\big)^T \mathbf{B} Q^T (\mathbf{A}x_0 + \mathbf{D}\bar{\mathbf{d}}) \; +$$

$$\big(\mathbf{A}x_0 + \mathbf{D}\bar{\mathbf{d}}\big)^T \; Q\mathbf{B} \; \big(\mathbf{M}\bar{\mathbf{d}} + \mathbf{h}\big) + \; \big(\mathbf{M}\bar{\mathbf{d}} + \mathbf{h}\big)^T (\mathbf{B}^{\boldsymbol{T}} Q\mathbf{B} + R)\big(\mathbf{M}\bar{\mathbf{d}} + \mathbf{h}\big) \tag{4.14}$$

subject to

$$\Phi^{-1}(1 - \alpha_i) \, \|\mathbf{G}_i(\mathbf{BM} + \mathbf{D})\|_2 \; \leq \; g_i - \mathbf{G}_{\boldsymbol{i}}(\mathbf{A}x_0 + \mathbf{Bh})$$

$$\Phi^{-1}(1 - \beta_i) \, \|\mathbf{F}_i\mathbf{M}\|_2 \; \leq \; f_i - \mathbf{F}_{\boldsymbol{i}}\mathbf{h} \tag{4.15}$$

where Φ is the Gaussian cumulative probability corresponding to d_i.

Note that the cost function considered in this thesis is quadratic function in contrast to the one used in [27] which is a linear function of u. Moreover, the objective here includes not only

minimizing the control power, but also reducing the error between room temperature and the default value. Furthermore, the SOCP problem is a nonlinear convex optimization problem. There are several algorithms that can provide a solution, i.e., interior point method [27].

SIMULATION RESULTS

In this section, simulation results are given to illustrate the proposed methods. The parameters of the climate model are given in section 2. The continuous-time system (1) is sampled with a zero-order hold and a sample-period of 10 minutes, resulting 144 samples per day. The initial temperatures are set to be [72:5°F;69:8°F;64:4°F]. The temperature reference trajectory is x_r = [74:3°F;74:3°F;68:0°F].

The cost matrices Q; R are chosen: $Q = diag(1;0;0)$ and R = 0:00002. Note that the smaller the R is, the faster the response will be but with more cost on inputs. The disturbance d in one day (assume it is periodic with period 24 hours) in this example is plotted:

LQG Performance

First, we apply the constrained LQR controller (12). The temperature t_1 and control power in 10 days are plotted in Figure 2. It is obvious that t_1 fluctuates around the set point temperature and in the range of constraint. However, some control inputs exceeds the range of the requirement and thus cut off at the boundaries.

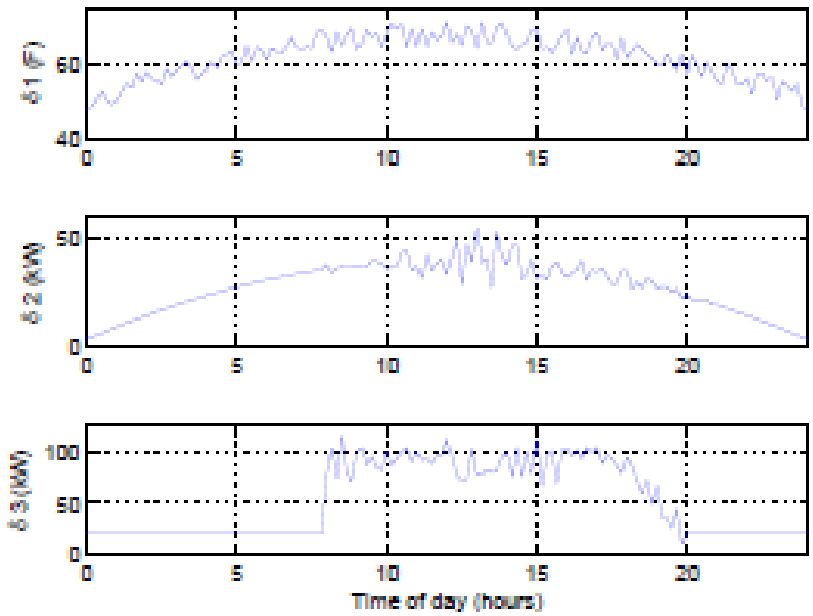

Figure 4.1. Disturbance to the building climate system.

We perform one more simulation in Figure 3 which removes the constraint on the control power for comparison. We can observe without the control constraints, t_1 fluctuates around the set point with a smaller fluctuation magnitude compared with Figure 2, but the price is more power cost.

RHC Performance

The RHC controller can be written in the linear form:

$$u_k = S^r x_k + L^r$$

where the super index r denotes the active region, i.e. the region which contains the given state x_k. To calculate the solution, we employ the Multi-Parametric Toolbox [28]. We increase R = 0:001, and compute the optimal solution to the finite horizon control problem with N = 5. The solution consists of 51 regions, and the result is plotted in Figure 4 which shows that the room

temperature stays within the required range with less energy consumption than the preceding control.

Stochastic RHC for Problem 2

Next, we focus on Problem 2. The probability levels for the temperature and control power are chosen as: $\alpha_i = 0{:}2$ and $\beta_i = 0{:}2$. The disturbances to the system are the same as in Figure 1, while approximately considered as Gaussian.

The optimization problem is solved by interior point method and then applied RHC with finite horizon $N = 2$ and $R = 0{:}00002$. t_1 and u are plotted in Figure 5 which shows that the room temperature is within the desired range with additional energy savings.

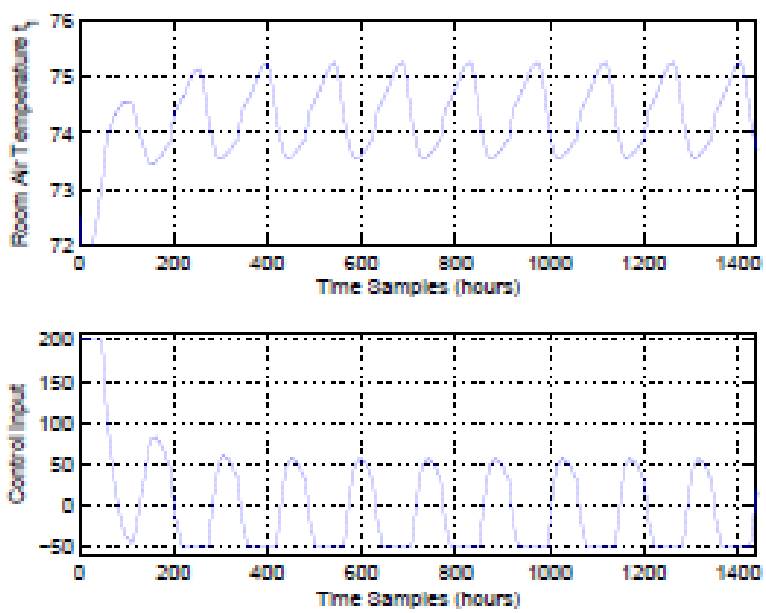

Figure 4.2. Room temperature t_1 and control power in 10 days using LQR.

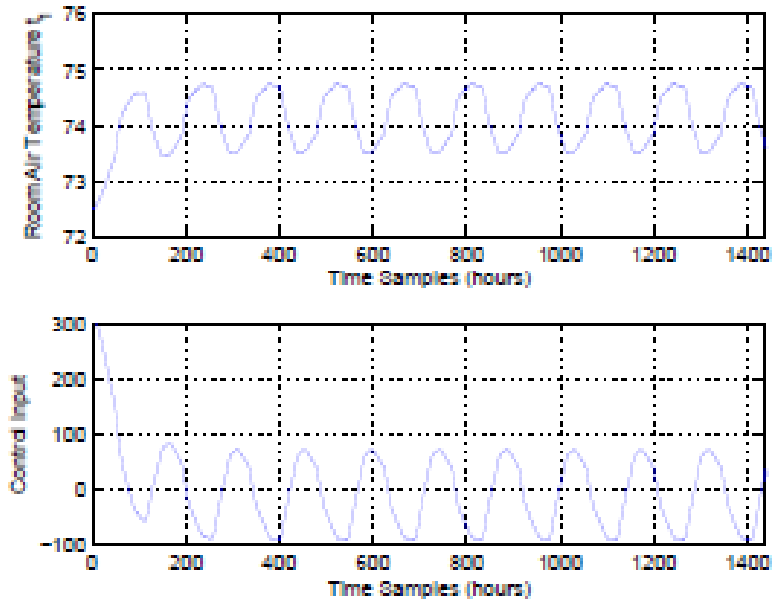

Figure 4.3. Room temperature t_1 and control power in 10 days without control constraints using LQR.

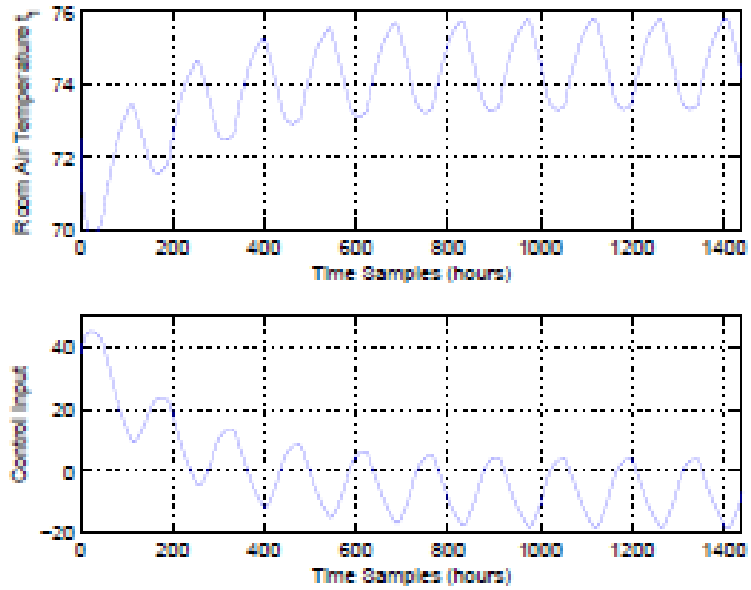

Figure 4.4. Room temperature t_1 and control power in 10 days using RHC.

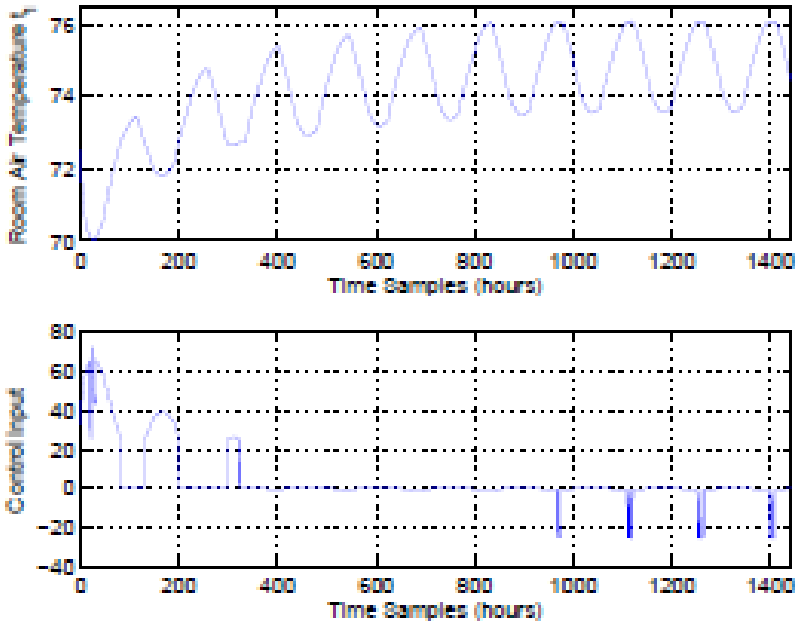

Figure 4.5. Room temperature t_1 and control power in 10 days using stochastic RHC corresponding to Problem 2.

Chapter 5

Stochastic Linear Quadratic Control of Energy Efficient Buildings: A Semidefinite Programming Approach

The previous chapter discussed receding horizon constrained linear quadratic Gaussian controllers that minimized the cost of heating and cooling. This chapter introduces the concept of constrained stochastic linear quadratic control (SLQC) and show how implementing a semidefinite programming approach yields optimal control to this problem. SLQC is used to compute the optimal control solution for the building model subject to linear inequality constraints and additional case with disturbance that is norm-bounded with an unknown distribution. The SLQC approach is used to solve the optimal solutions of problems in both cases via semidefinite programming. The second problem is formulated as a min-max problem and the SDP is compared with LQR. Moreover, the cost function includes both quadratic forms of temperature errors and control input, which means the optimal control is designed to find a compromise between them. Lastly, the problems are formulated into semidefinite optimization problems which may be solved through SDP for the optimal solutions efficiently.

BUILDING SYSTEM MODEL

The continuous-time dynamics of the room temperature, interior-wall surface temperature, and exterior-wall core temperature, can be represented as follows:

$$i_1 = \frac{1}{C_1}\,[(K_1 + K_2)(t_2 - t_1) + K_5(t_3 - t_1) + K_3(\delta_1 - t_1) + u_h + u_c + \delta_2 + \delta_3]$$

$$i_2 = \frac{1}{C_2}\,[(K_1 + K_2)(t_1 - t_2) + \delta_2]$$

$$i_3 = \frac{1}{C_3}\,[\,K_5(t_1 - t_3) + K_4(\delta_1 - t_3)]$$

where the parameters in the model above are:

t_1: Room air temperature °F
t_2: Interior wall surface air temperature °F
t_3: Exterior wall core temperature °F
u_h : Heating power (≥ 0) kW
u_c : Cooling power (≤ 0) kW
δ_1: Outside air temperature °F
δ_2: Solar radiation kW
δ_3: Internal heat sources kW

$C_1 = 9.356 \times 10^5$ kJ/°F
$C_2 = 2.970 \times 10^6$ kJ/°F
$C_3 = 6.695 \times 10^5$ kJ/°F
$K_1 = 16.48$ kW/°F
$K_2 = 108.5$ kW/°F
$K_3 = 5$ kW/°F
$K_4 = 30.5$ kW/°F
$K_5 = 23.04$ kW/°F

The system states are the room air temperature t_1, interior wall surface temperature t_2, and exterior wall core temperature t_3. The control signals u_h and u_c represent heating and cooling power, and they can be combined as one variable $u = u_h + u_c$ because heating and cooling are not simultaneous. For more details about this model, please refer to [22, 23].

Define the state vector x, the control signal vector u, and the environment stochastic disturbance vector d as:

$$x := \begin{bmatrix} t_1 \\ t_2 \\ t_3 \end{bmatrix}, u := \begin{bmatrix} u_h \\ u_c \end{bmatrix}, d := \begin{bmatrix} \delta_1 \\ \delta_2 \\ \delta_3 \end{bmatrix}$$

The state-space model can then be written compactly as:

$$\dot{x} = Ax + B_1 u + B_2 d \tag{5.1}$$

where

$$A := \begin{matrix} -\frac{1}{C_1}(K_1 + K_2 + K_3 + K_5) & \frac{1}{C_1}(K_1 + K_2) & \frac{K_5}{C_1} \\ \frac{K_1 + K_2}{C_2} & \frac{-(K_1 + K_2)}{C_2} & 0 \\ \frac{K_1}{C_3} & 0 & \frac{-(K_5 + K_4)}{C_3} \end{matrix}$$

$$B_1 := \begin{matrix} \frac{1}{C_1} + \frac{1}{C_2} \\ 0 \\ 0 \end{matrix}$$

$$B_2 := \begin{matrix} \frac{K_3}{C_1} & \frac{1}{C_1} & \frac{1}{C_1} \\ 0 & \frac{1}{C_2} & 0 \\ \frac{K_4}{C_3} & 0 & 0 \end{matrix}$$

The following constraints are imposed on the temperatures during a day to satisfy the requirement:

$$t_1 \geq \begin{cases} 69.8\ °\text{F} & from\ 8am\ to\ 6pm \\ 66.2\ °\text{F} & otherwise \end{cases} \tag{5.2a}$$

$$t_1 \leq \begin{cases} 78.8\ °\text{F} & from\ 8am\ to\ 6pm \\ 86\ °\text{F} & otherwise \end{cases} \tag{5.2b}$$

$$0 \leq u_h \leq 200 \quad , \quad -50 \leq u_c \leq 0$$

Thus, the control constraint can be written in terms of u as:

$$-50 \leq u \leq 200 \tag{5.3}$$

From above constraints, we can observe that both the room air temperature and control signal are constrained. In the next section, the control problem is formulated.

PROBLEM FORMULATION

We consider the problem where the temperature t_1 is required to remain within certain bounds of a constant in the presence of the disturbance vector d. Moreover, we can assign setpoints for t_1, t_2 and t_3, but without any other constraint on t_2 and t_3. Thus, we can regulate the output error $e_k := x_k - x_r$ at time k, where x_r is the setpoint vector of x. We hope to minimize the error e to keep the temperature t_1 close to the desired value. Meanwhile, we also hope to use as less power as we can to save energy. It follows then that our objective is to find for the system (1) discretized, the M-control sequence $\{u_0; \cdots ; u_{M-1}\}$, where $u_i := u(t_i)$, $i = 0; \cdots ; M$; M is an integer large enough, $t_i = i\Delta T$, where ΔT is the sampling period; and corresponding state sequence $\{x_0; \cdots ; x_{M-1}\}$ and error sequence $\{e_0; \cdots ; e_{M-1}\}$, that minimize the finite horizon objective function:

$$V_N\,(e_0, \mathbf{u}, \omega) := \frac{1}{2}[(x_N - x_r)^T P(x_N - x_r) + \sum_{k=1}^{N-1} e_k^T Q e_k + \sum_{k=0}^{N-1} u_k^T R u_k)] \tag{5.5}$$

where $P \geq 0$; $Q \geq 0$ (i.e., semi-definite positive matrices), $R > 0$ (i.e., positive definite matrix), N is the prediction horizon, Gaussian disturbance ω, and

$$x := [x_0^T, \dots, x_N^T]^T$$

$$u := [u_0^T, \dots, u_{N-1}^T]^T$$

$$\omega := [\omega_0^T, \dots, \omega_{N-1}^T]^T$$

The differences between the cost function above and those considered in [27] and [30] are that [27] used a linear cost function in the control input and [30] assumed the disturbance was 0 in the cost function which simplified the problem.

Constraints on Temperature:

In this work, we consider two cases: The disturbance is known to be Gaussian and the disturbance belongs to some norm-bounded set while its distribution is unknown.

Since the disturbance d_k is random, the state x_k is not exactly known and any constraints on the state could be formulated in a probabilistic sense [31]. Thus, similar as [27] and [30], the constraint on x_k can be described by the so-called chance constraint as follows:

$$P[\mathbf{G}_i x > \mathbf{g}_i] \leq \alpha_i$$

The above constraint is non-convex and hard to resolve directly. In the first case when the disturbance is Gaussian, as shown in [27] and [30], the authors took u_k as affine disturbance feedback to approximate and simplify this constraint. However, if we do not assume any form of the control input, we can still simplify the chance constraint to a hard constraint exactly as already shown in [31].

Assume the ω are independent and normally distributed, i.e., $\omega \sim, \mathrm{N}\ (\mu, \Sigma)$ where $\Sigma > 0$. Then, we have the following theorem from [31].

Theorem 5.1: Consider a linear system with the state written as:

$$\mathbf{x} = \widetilde{\mathbf{A}}x_0 + \widetilde{\mathbf{B}}\mathbf{u} + \tilde{\mathbf{C}}\omega \tag{5.8}$$

Then, the constraint

$$\mathbf{p}^T\mathbf{u} \leq q \tag{5.9}$$

where $\mathbf{p} = \widetilde{\mathbf{B}^T}\mathbf{G}_i$, $q = \mathbf{g}_i - \mathbf{G}_i\widetilde{\mathbf{A}}x_0 - \mathbf{G}_i\tilde{\mathbf{C}}\mu - \left\|\sum\frac{1}{2}\widetilde{\mathbf{C}^T}\mathbf{G}_i\right\|_2 \Phi^{-1}(1-\alpha_i)$ implies the chance constraint (7).

It follows then that the problem corresponding to the first case can be formulated as follows:

Problem 5.1: Find

$$\mathrm{u}(x_0) := arg\ min_{\mathrm{u}}\ \mathbb{E}_\omega V_N \tag{5.10}$$

subject to (4), (9), and discretized version of (1). where Eω (•) denotes the expectation operator with respect to the Gaussian disturbance ω.

In the second case, assume the disturbance **w** belongs to a norm bounded set, e.g.,

$$\mathbf{W}_\gamma = \{\omega \mid \|\omega\|_2 \leq \gamma\}$$

In this case, the chance constraint can not be transformed to a hard constraint as shown above. Thus, in this work, we use a hard constraint to approximate it. First, recall that we hope $\mathbf{G}_i\mathbf{x} > \mathbf{g}_i$ to be satisfied. Then, by (8), we reach that

$$\mathbf{G}_i\tilde{A}x_0 + \mathbf{G}_i\tilde{B}\mathbf{u} + \mathbf{G}_i\tilde{B}\omega > \mathbf{g}_i$$

which is implied by

$$\mathbf{G}_i\tilde{B}\mathbf{u} > \mathbf{g}_i - \mathbf{G}_i\tilde{A}x_0 + \left\|\tilde{C}^T\mathbf{G}_i\right\|_2\gamma \tag{5.11}$$

Note that (11) will introduce some conservativeness comparing to the desired constraint. Thus, the problem of the second case can be formulated as a min-max problem:

Problem 5.2: Find

$$u_k(x_0) := \arg min_u \max_{\omega \epsilon \mathbf{W}_\gamma} V_N \tag{5.12}$$

subject to (4), (11), and discretized version of (1).

This problem can be explained as follows: First, search out the worst value of ω that maximizes the cost, then, find an optimal control that minimizes the cost in the worst situation. In the next section, we employ the technique developed in [31] to transform both problems to semidefinite optimization problems, where they can be solved efficiently.

CONTROL STRATEGIES

If there is no constraint, the optimization problem under Gaussian disturbance can be solved by linear quadratic regular (LQR) through Bellman's recursion. However, with constraints, this approach involves a huge amount of computation to find the optimal solution. To find the optimal values for each problem, we employ the stochastic linear quadratic control (SLQC) to formulate the problems as semidefinite optimization problems.

LQR Control

First, it is important to discuss the LQR control strategy for the first problem briefly. The LQG controller designed here employs a simple strategy, first compute the LQG control signal which minimizes the cost function, after which the control constraint (3) is applied. That is, if the

LQG control signal exceeds the range of the constraint, then it will be cut off from above or below.

The discrete-time finite horizon LQR can be computed by dynamic programming and written as follows [25]:

$$u_k^* = -K_k(x_k - x_r) \tag{4.9}$$

where

$$K_k = (R + B_d^T P_k B_d)^{-1} B_d^T P_k A_d \tag{4.10}$$

and *Pk* is calculated iteratively backwards in time by the dynamic Riccati equation:

$$P_{k-1} = Q + A_d^T (P_k + P_k B_d^T (R + B_d^T P_k B_d)^{-1} B_d^T P_k) A_d \tag{4.11}$$

from initial condition $P_N = P$.

Using a simple saturation method, the constrained control input based on LQG can be written as the following:

$$u_k \geq \begin{cases} u_k{}^* \; if \; u_1 \leq u_k \leq u_2 \\ u_1 \qquad\quad if \; u_k{}^* \leq u_1 \\ u_2 \qquad\quad if \; u_k{}^* \geq u_2 \end{cases} \tag{4.12}$$

where u_1;u_2 are the lower and upper bound of the control signal from constraints. If the control computed by LQR exceeds either the lower or upper bound, then the control input is cut off to be the bound that it exceeds. Note that from the analysis in the previous section, the chance constraint on states can be reduced to the hard constraint on the control input represented by (9).

SDP Approach for Problem 5.1

In this section, we applied the technique in [31] to formulate Problem 5.1 as a semidefinite optimization problem. An obvious result about the cost function is given in the following proposition.

Proposition 5.1: The cost function (5) can be written as:

$$V_N\,(e_0, \mathbf{u}, \omega) = \; 2\mathbf{a}^T e_0 + \; {e_0}^T \mathbf{A} e_0 + \; 2\mathbf{b}^T \mathbf{u} + \; \mathbf{u}^T \mathbf{B} \mathbf{u} + 2\mathbf{c}^T \omega + \; \omega^T \mathbf{C} \omega + 2\mathbf{u}^T \mathbf{D} \omega + \; \hat{l} \tag{5.17}$$

for vectors **a**, **b**, **c** and matrices **A**, **B**, **C**, **D** with appropriate dimensions. We also have the following for matrices **B** and **C** such that **B** > 0, **C** ≥ 0 (positive definite and semi-definite positive matrices, respectively).

Proof: The original system can be written in terms of error dynamics, at time *k*,

$$e_k = \; \widetilde{\mathbf{A}}_{k-1} e_0 + \widetilde{\mathbf{B}}_{k-1} \mathbf{u} + \; \widetilde{\mathbf{A}}_{k-1} \omega + L_{k-1}$$

where $L_{k-1} \; = \; A_d^{k-1}\, x_r - \; x_r$ and from (1), $x_k\,, \omega_k$ are 3×1 and u_k is a scalar so that

$$\widetilde{\mathbf{A}}_{k-1} = \; A_d^k$$

$$\widetilde{\mathbf{B}}_{k-1} = [A_d^{k-1}\, B_d \; \cdots \; B_d\, \mathbf{0}_{3\times(N-k)}]$$

$$\widetilde{\mathbf{C}}_{k-1} = [A_d^{k-1}\, B_d \; \cdots \; B_d\, \mathbf{0}_{3\times 3(N-k)}] \tag{5.18}$$

Then, after some manipulations, the error state term in cost function becomes:

$$e_k^T Q e_k = e_0^T \mathbf{A}_{k-1}^T Q \mathbf{A}_{k-1} e_0 + 2 e_0^T \mathbf{A}_{k-1}^T Q \left(\widetilde{\mathbf{B}}_{k-1} \mathbf{u} + \tilde{\mathbf{C}}_{k-1} \omega \right) + \mathbf{u}^T \widetilde{\mathbf{B}}_{k-1}^T Q \widetilde{\mathbf{A}}_{k-1} \mathbf{u}$$
$$+ \omega^T \tilde{\mathbf{C}}_{k-1}^T Q \tilde{\mathbf{C}}_{k-1} \omega + 2 \mathbf{u}^T \widetilde{\mathbf{B}}_{k-1}^T Q \tilde{\mathbf{C}}_{k-1} \omega + 2 L_{k-1}^T Q \left(\widetilde{\mathbf{A}}_{k-1} e_0 + \widetilde{\mathbf{B}}_{k-1} \mathbf{u} + \tilde{\mathbf{C}}_{k-1} \omega \right)$$
$$+ L_{k-1}^T Q L_{k-1} \tag{5.19}$$

Thus, we reach the formula of the cost function stated above with

$$\mathbf{A} = \sum_{k=1}^{N} \widetilde{\mathbf{A}}_{k-1}^T Q \widetilde{\mathbf{A}}_{k-1}$$

$$\mathbf{B} = \mathbf{diag}(\mathbf{R}, \dots, \mathbf{R}) + \sum_{k=1}^{N} \widetilde{\mathbf{B}}_{k-1}^T Q \widetilde{\mathbf{B}}_{k-1}$$

$$\mathbf{C} = \sum_{k=1}^{N} \tilde{\mathbf{C}}_{k-1}^T Q \tilde{\mathbf{C}}_{k-1}$$

$$\mathbf{D} = \sum_{k=1}^{N} \mathbf{B}_{k-1}^T Q \tilde{\mathbf{C}}_{k-1}$$

$$\mathbf{c} = \left(\sum_{k=1}^{N} \tilde{\mathbf{C}}_{k-1}^T Q \widetilde{\mathbf{A}}_{k-1} \right) e_0 + \sum_{k=1}^{N} \tilde{\mathbf{C}}_{k-1}^T Q L_{k-1}$$

$$\mathbf{a} = \sum_{k=1}^{N} \tilde{\mathbf{C}}_{k-1}^T Q L_{k-1}$$

$$\hat{l} = \sum_{k=1}^{N} L_{k-1}^T Q L_{k-1}$$

$$\mathbf{b} = \left(\sum_{k=1}^{N} \widetilde{\mathbf{B}}_{k-1}^{T} Q \widetilde{\mathbf{A}}_{k-1}\right) e_0 + \sum_{k=1}^{N} \widetilde{\mathbf{B}}_{k-1}^{T} Q L_{k-1}$$

(5.20)

Similarly as [31], let $\mathbf{h} = \mathbf{c} - \mathbf{D}^T\mathbf{B}^{-1}\mathbf{b}$ and$\mathbf{F} = \mathbf{B}^{-1/2}\mathbf{D}$, then by eliminating the constant terms and take $\mathbf{u} = \mathbf{B}^{-1/2}\boldsymbol{y} - \mathbf{B}^{-1}\mathbf{b}$, the cost function above can be further reduced to be:

$$\tilde{V}_N\ (e_0, \mathbf{u}, \omega) = \mathbf{y}^T\mathbf{y} + 2\mathbf{h}^T\mathbf{w} + 2\mathbf{y}^T\mathbf{F}\omega + \ \omega^T\mathbf{C}\omega$$

(5.21)

Taking the expectation of the above cost, we have

$$\hat{V}_N\ (e_0, \mathbf{u}, \omega) = \mathbf{y}^T\mathbf{y} + 2\mathbf{h}^T\mu + 2\mathbf{y}^T\mathbf{F}\mu + \ trace(\mathbf{C}\sum)$$

(5.22)

Again, taking away constant terms, the cost to be minimized is $\hat{V}_N(e_0, \mathbf{y}, \omega) = \ \mathbf{y}^T\mathbf{y} + 2\mathbf{y}^T\mathbf{F}\mu$. Then, the Problem 5.1 is equivalent to find $\mathbf{u}(x_0) := \arg min_{\mathbf{u}} \hat{V}_N$. This problem can be solved through SDP to obtain the optimal solution, as shown in the next theorem.

Theorem 5.2: Problem 5.1 may be solved by the following semidefinite optimization problem:

$$\begin{aligned} & minimize\ z \\ & subject\ to\ (4), (9) \\ & \begin{matrix} \mathbf{I}_N & \mathbf{y} + \mathbf{F}\mu \\ \mathbf{y}^T + \mu^T\mathbf{F}^T & z + (\mathbf{F}\mu)^T\mathbf{F}\mu \end{matrix} \geq 0 \\ & \lambda \ \geq 0 \end{aligned} \tag{5.23}$$

in decision variables $\mathbf{y}$ and z.

.

Proof: The proof is given below by following the technique in Theorem 3 in [31]. First, note the minimization of $\hat{V}_N\ (e_0, \mathbf{u}, \omega)$ can be rewritten as

$$minimize\ z$$

$$subject\ to\ z - \ \mathbf{y}^T\mathbf{y} + 2\mathbf{y}^T\mathbf{F}\mu\ > 0 \tag{5.24}$$

The constraint (24) can be further written as

$$z - \ \mathbf{y}^T\mathbf{y} + 2\mathbf{y}^T\mathbf{F}\mu\ - \ (\mathbf{F}\mu)^T\mathbf{F}\mu + \ (\mathbf{F}\mu)^T\mathbf{F}\mu\ \geq 0$$

or

$$z - \ (\mathbf{F}\mu)^T\mathbf{F}\mu - \ (\mathbf{y} + \mathbf{F}\mu)^T(\mathbf{y} + \mathbf{F}\mu) \geq 0 \tag{5.25}$$

Then, by Schur complement lemma, (25) can be formulated as (26). Moreover, note that (4) and (9) are linear constraints on the control input, which can be added without increasing the complexity type. Thus, we obtain the statement.

SDP Approach for Problem 5.2

In the last section, we provided an exact solution for Problem 5.1 under the assumption that the disturbance is Gaussian. However, in the real world, this assumption does not hold most of the time, rather, the disturbance does not follow a regular probability distribution. Usually, it is assumed that the disturbance is bounded (e.g., temperatures will not go unbounded) in a given set. Thus, the problem was formulated as Problem 5.2. It can be viewed as finding the optimal control that minimizes the worst cost in searching in the disturbance bound. The advantage of solving this problem is that it is not necessary to know the distribution of the disturbance, which is used to compute the expected cost. Moreover, by minimizing the maximum of the cost, it can

be guaranteed that the overall cost will be limited in an appropriate range. The solution of Problem 5.2 can be represented by the following semidefinite optimization problem by directly applying the approach in [31] and stated in the next theorem.

Theorem 5.3: Problem 5.2 may be solved by:

$$\begin{aligned} &minimize\ z \\ &subject\ to\ (4), (11) \\ &\begin{matrix} \mathbf{I}_N & \mathbf{y} & \mathbf{F} \\ \mathbf{y}^T & z - \gamma^2\lambda & -\mathbf{h}^T \\ \mathbf{F}^T & -\mathbf{h} & \lambda\mathbf{I}_{3N} - \mathbf{C} + \mathbf{F}^T\mathbf{F} \end{matrix} \geq 0 \end{aligned} \tag{5.26}$$

in decision variables $\mathbf{y}$, z, and λ .

The optimal control input can be obtained by the transformation $\mathbf{u} = \mathbf{B}^{-1/2}\mathbf{y} - \mathbf{B}^{-1}\mathbf{b}$ after solving the above problem.

Additional Discussion

Although in the previous sections, we proposed to use SLQC to compute the optimal control solution for the building model subject to linear inequality constraints, we also would like to claim that this technique may solve more requirements in the building climate control.

1) Closed-Loop Control

Theorem 5.2 and 5.3 solve the problems by providing open-loop control, they can be extended to closed-loop control easily. For example, after solving Theorem 5.2 and obtaining the control vector u, consider the first component as the current control applied on the building. Then, with the next temperature information coming (assume a full state feedback), use it as x_0 and compute the control vector again through Theorem 5.2. If the states are not measured accurately, e.g., corrupted by noise, then, by assuming the state estimate $\hat{x}_0 = x_0 + v$, the form of the cost function is unaltered by [31].

2) Constraints on the Input Power

One interesting restriction in building energy control is the power of the control signal, which is the power injected to the building for control purposes. This power is expected to be as small as possible to save energy. One constraint of the control input for such purpose is represented by (4). Another constraint that may be interesting is the total power of the consumption, which may be represented by $\|\mathbf{u}\|_2^2 \leq P$ (note the input can be positive or negative). Such a constraint may be added to either problem without increasing the complexity type since it is only a second-order cone constraint.

3) Chance Constraints on the Performance

Another interesting requirement is the performance guarantee. The work in [31] has demonstrated that the probability

$$\mathbf{P}(V_N(e_0, \mathbf{u}, \omega) > v) \leq \varepsilon$$

may be implied by a convex quadratic constraint, which can be added to either problem without raising the complexity type.

SIMULATION RESULTS

In this section, we present simulation results which demonstrate validity of the SLQC method in the above problems. The desired temperature or reference temperature of the room air temperature is set as $22\ ℃ = 71.6\ ℉$. The temperature was sampled every 10 minutes, and seen below is the plot t_1 and the control input.

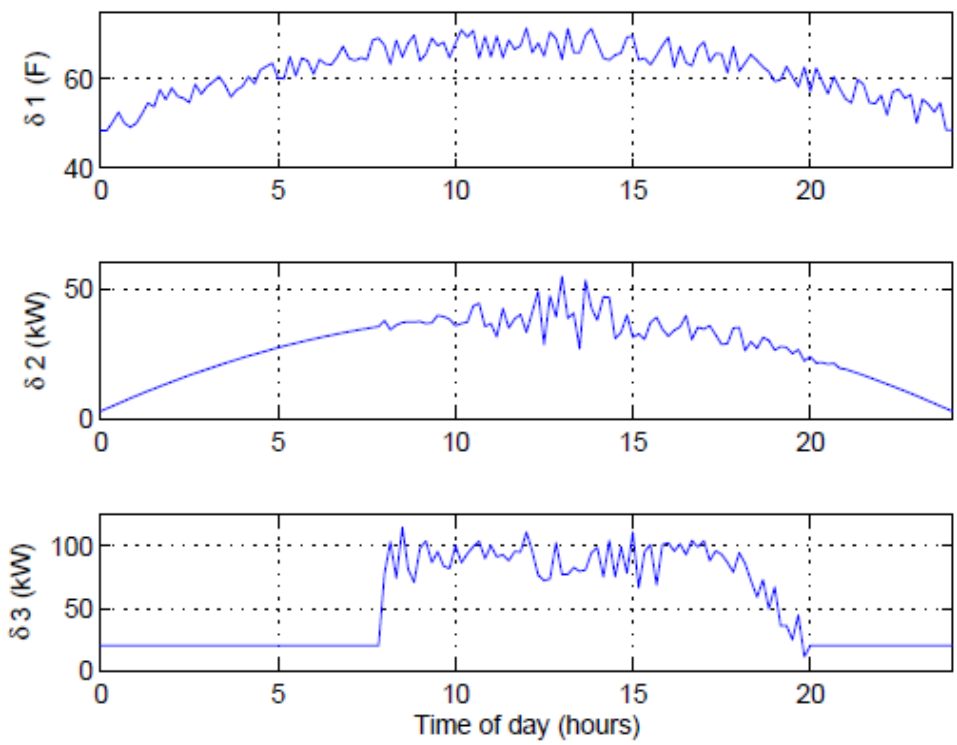

Figure 5.1. Disturbance to the building climate system.

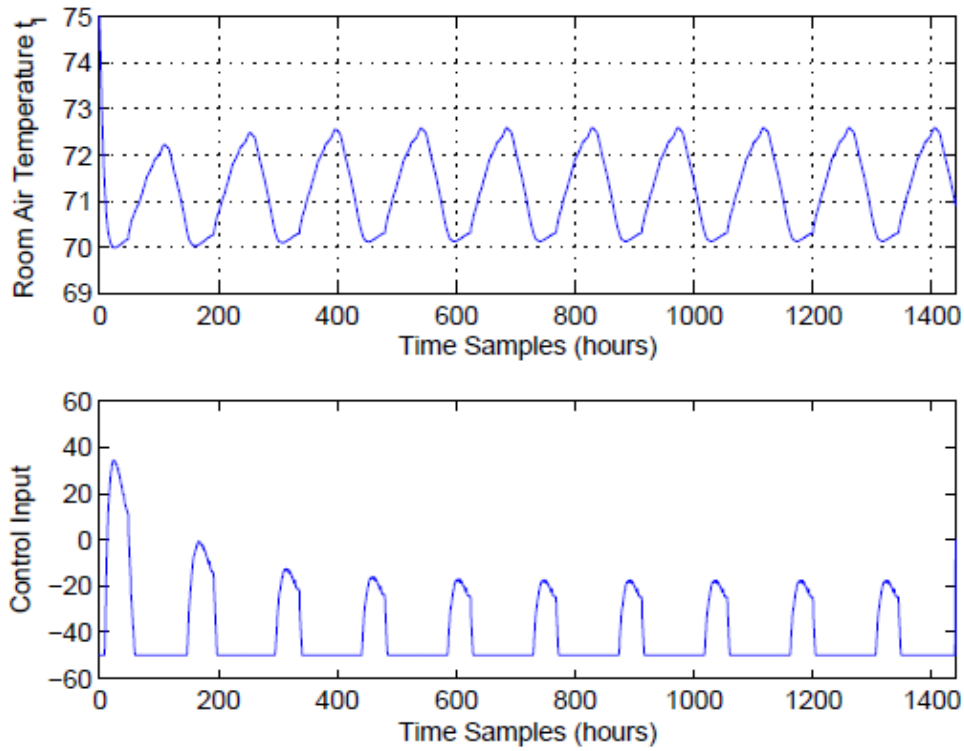

Figure 5.2. Room temperature t_1 and control power in 10 days using LQR.

for each method during a period of 10 days in the sequel. The disturbances is shown in Fig. 1 First, we plot the trend of t_1 using LQR control (15) in Fig. 2, and using SDP through (26) in Figure 5.3. It is observed that both LQR and SDP techniques can keep t_1 in the desired range and close to the reference temperature. To further illustrate the difference between them, we compute $\|\mathbf{u}\|_2$ for both methods. For LQR, $\|\mathbf{u}\|_2 = 1665.3$, while for SDP, $\|\mathbf{u}\|_2 = 1268.3$, which shows that the proposed SDP technique computes a better control by reducing the power.

Moreover, we plot the trend of t_1 using SDP for Theorem 5.3 in Fig. reffig: minmax It is obvious that even we do not know the distribution of the disturbance; we still can control the temperature within the desired range. However, we should also note, the controlled temperature has some distance from the reference signal.

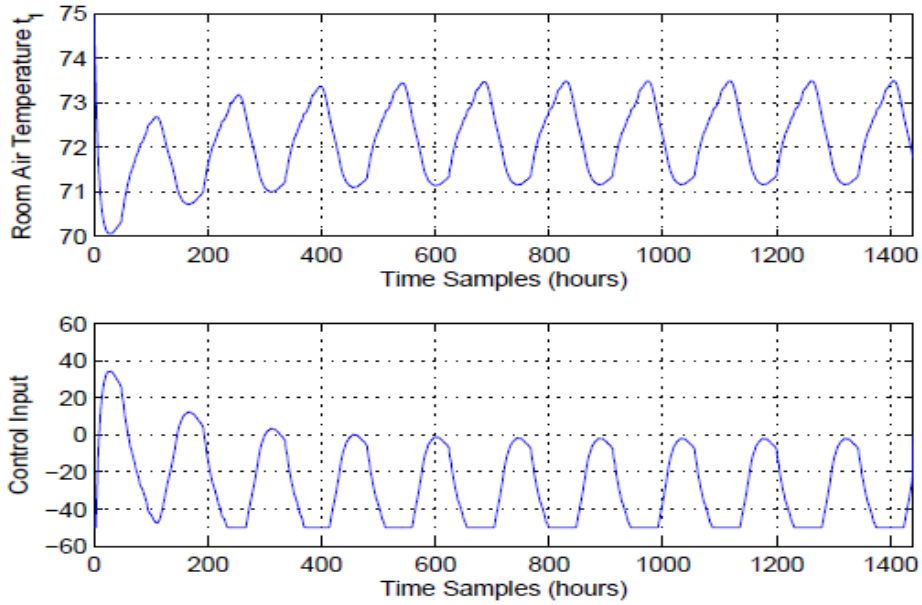

Figure 5.3. Room temperature t_1 and control power in 10 days using SDP in Theorem 5.2.

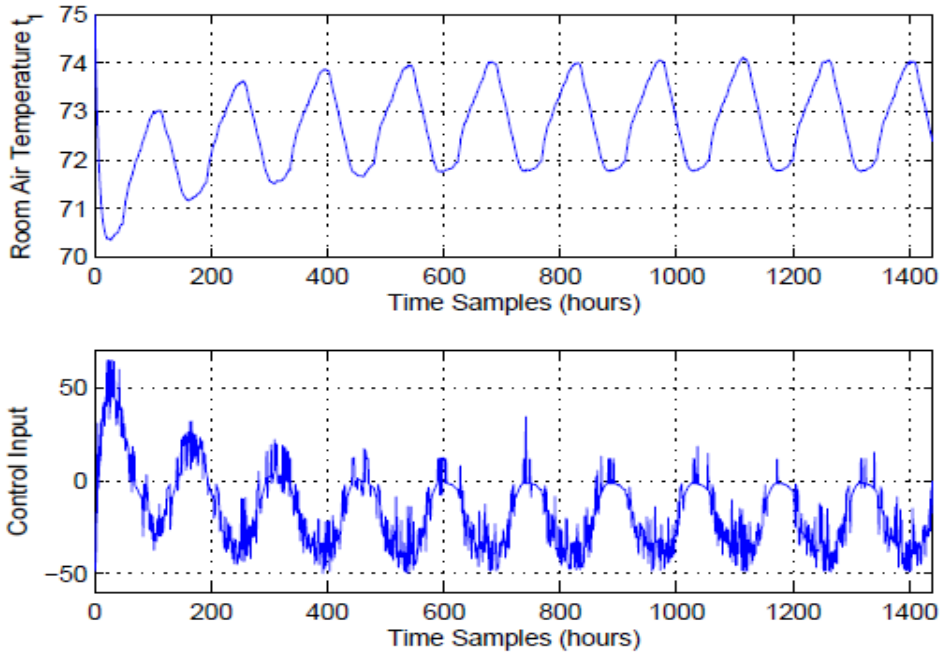

Figure 5.4. Room temperature t_1 and control power in 10 days using SDP in Theorem 5.3.

Chapter 6

Conclusion

In this thesis, we developed a modeling and control approach for room temperature in buildings. The goal of any model reduction technique is to accurately and efficiently identify a reduced-order model with the least number of states possible while keeping the representation within a given error tolerance. The approach was based on a distributed parameter model coupled with high performance computing, and modern control theory to regulate room temperature. This theory allows us to study optimal sensor location. Here we developed a modeling and control approach for room temperature in buildings by employing a distributed parameter model coupled with high performance computing, and modern control theory to regulate room temperature. Furthermore, a numerical solution of the heat transfer problem for the room geometry using the Finite Elements technique to formulate the full order model of the problem was given. The full order model for the room temperature was controlled by implementing Linear Quadratic Regulator (LQR).

It was also shown that the derivation of the reduced model using Proper Orthogonal Decomposition (POD) was effectively applied to the control to the reduced model. These results were compared with the full order model control. Constrained LQR and RHC were employed to

solve stochastic optimization problems, and stochastic RHC was used to solve the problem with chance constraints. Future work in this area should focus on a robust control strategy with chance constraints. The results obtained showed excellent performance and are promising for practical implementation. Future research includes coupling the 3D heat equation here with the Boussinesq equation to account for room air flow dynamics. A rigorous study of optimal sensor location should also be investigated in future work.

A linear quadratic Guassian (LQG) controller and receding horizon controller (RHC) with linear and probabilistic constraints are designed with an optimal solution and applied to HVAC systems and building model. MPC utilized the system constraints that can be implemented in the controller, and effectively and efficiently control the system, and therefore it was ideal to incorporate this method here. A receding horizon constrained linear quadratic Gaussian (LQG) controller was developed by minimizing the energy cost while satisfying hard and probabilistic temperature constraints.

In this work, we also studied a constrained SLQC approach to solve stochastic optimization problems with chance constraints by SDP. The problems were formulated into semidefinite optimization problems and solved through SDP for the optimal solutions efficiently. The SLQC method was developed to solve stochastic optimization problems by semidefinite programming. This approach was considered for a stochastic quadratic cost function with Gaussian disturbances, and in the second case assumes the disturbance is norm-bounded with distribution unknown. SLQC was used to compute the optimal control solution for the building model subject to linear inequality constraints and additional case with disturbance that is norm-bounded with an unknown distribution. The second problem is formulated as a min-max problem and the SDP is compared with LQR. Moreover, the cost function includes both

quadratic forms of temperature errors and control input, and the optimal control was designed to satisfy these parameters. The SLQC approach was used to solve the optimal solutions of problems in both cases via semidefinite programming. Simulation results were given to demonstrate the effectiveness of this method. Future work should focus on the optimal solution using affine disturbance feedback.

List of References

[1] T. N. Narasimhan. Fourier Heat Conduction Equation: History, Influence, and Connections. 2014, pg 1.

[2] Qing Song and Wenjian Cai. “A Neural Network Assisted Cascade Control System for Air Handling Unit”, Chengyi Guo, , IEEE Transactions on Industrial Electronics, Vol. 54, No. 1 2007, pg 620.

[3] Purdon, Sean, et al. “Model-free HVAC control using occupant feedback”, Second IEEE Iternational Workshop on Global Trends in Smart Cities 2013 pg 83.

[4] Mohammadbagheri et al. “Comparison Perfromance Between PID and LQR Controllers for 4-leg Voltage-Source Inverters, 2011 IACSIT vol. 7 pg 230.

[5] J. Borggaard, J. A. Burns, A. Surana, and L. Zietsman, Control, Estimation and Optimization of Energy Efficient Buildings, Proceedings of the American Control Conference, St. Louis, MO, USA June 10-12, 2009, pp. 837-841.

[6] R.C. Camphouse, “Boundary Feedback Control Using Proper Orthogonal Decomposition Models,” Journal of Guidance, Control, and Dynamics, Vol. 28, No. 5, September-October 2005, pp. 931-938.

[7] S. Sahyoun and S.M. Djouadi, Nonlinear Model Reduction for Fluid Flows, Proceedings of the American Control Conference, San Francisco, June 28-July 1, 2011.

[8] E. Stein (2009), Olgierd C. Zienkiewicz, a pioneer in the development of the finite element method in engineering science. Steel Construction, 2 (4), 264-272.

[9] Strang, Gilbert; Fix, George (1973). An Analysis of The Finite Element Method. Prentice Hall. ISBN 0130329460.

[10] P. Solin, K. Segeth, I. Dolezel: Higher-Order Finite Element Methods, Chapman & Hall/CRC Press, 2003.

[11] Crank, J.; Nicolson, P.; Hartree, D. R. (1947), "A Practical Method for Numerical Evaluation of Solutions of Partial Differential Equations of the Heat-Conduction Type", Proceedings of the Cambridge Philosophical Society 43: 50–67.

[12] Kwakernaak, Huibert and Sivan, Raphael (1972). Linear Optimal Control Systems. First Edition. Wiley-Interscience. ISBN 0-471-511102.

[13] Holmes, P., Lumley, J. L., & Berkooz, G. (1996). Turbulence, coherent structures, dynamical systems and symmetry. Cambridge: Cambridge University Press.

[14] R.C. Camphouse, "Boundary Feedback Control Using Proper Orthogonal Decomposition Models," Journal of Guidance, Control, and Dynamics, Vol. 28, No. 5, September-October 2005, pp. 931-938.

[15] D. Georges, The Use of Observability and Controllability Gramians or Functions for Optimal Sensor and Actuator Location in Finite-Dimensional Systems, Proceedings of the 34th Conference on Decision & Control New Orleans, LA - December 1995, pp. 3319-3324.

[16] J.A. Burn and B.B. King, Optimal sensor location for robust control of distributed parameter systems, Proceedings of the 33rd Conference on Decision and Control Lake Buena Vista, FL - December 1994, pp. 3967-3972.

[17] comsol.com

[18] J.M. McQuade. "A system approach to high performance buildings," *Technical report, United Technologies Corporation*, February 2009. http://gop.science.house.gov/Media/hearings/energy09/april28/mcquade.pdf.

[19] Y. Ma, F. Borrelli, B. Hencey, A. Packard, and S. Bortoff, "Model Predictive Control of Thermal Energy Storage in

[20] Building Cooling Systems," *Proceedings of the Joint 48th Conference on Decision and Control and 28th Chinese Control Conference*, Shanghai, P.R. China, December 16-18, 2009, pp. 392-397.

[21] J. Borggaard, J. A. Burns, A. Surana, and L. Zietsman, "Control, Estimation and Optimization of Energy Efficient Buildings," *Proccedings of the American Control Conference*, St. Louis, MO, USA June 10-12, 2009, pp. 837-841.

[22] M. Gwerder and J. Todtli, "Predictive Control for Integrated Room Automation," 8th REHVA World Congress for Building Technologies-CLIMA, Switzerland, 2005.

[23] F. Oldewurtel, A. Parisio, C.N. Jones, M. Morari, D. Gyalistras, M. Gwerder, V. Stauch, B. Lehmann, and K. Wirth, "Energy Efficient Building Climate Control using Stochastic Model Predictive Control andWeather Predictions," *Proceedings of the American Control Conference*, Baltimore, MD, USA June 30-July 02, 2010, pp. 5100-5105.

[24] R. Gondhalekar, F. Oldewurtel, and C.N. Jones, "Least-Restrictive Robust MPC of Periodic Affine Systems with Application to Building Climate Control," *Proceeings of the 49th IEEE Conference on Decision and Control*, pp. 5257-5263, December 15-17, 2010.

[25] H. Kwakernaak, and R. Sivan, Linear Optimal Control Systems. First Edition. Wiley-Interscience, 1972.

[26] G.G. Goodwin, M.M. Seron, and J.A. De Dona, *Constrained Control and Estimation: An Optimization Approach*, Springer, 2005.

[27] Margaret H. Wright, "The interior-point revolution in optimization: history, recent developments, and lasting consequences". *Bull. Amer. Math. Soc. (N.S)*, vol 42, pp. 39C56, 2005.

[28] M. Kvasnica, P. Grieder, and M. Baotic, *Multi-Parametric Toolbox (MPT)*, http://control.ee.ethz.ch/ mpt/, 2004.

[29] M. Koschenz and B. Lehmann. ”Development of a thermally activated ceiling panel with pcm for application in lightweight and retrofitted buildings,” *Energy and Buildings*, vol. 36(6), pp. 567 - 578, 2004.

[30] F. Oldewurtel, C. Jones, and M. Morari, “A Tractable Approximation of Chance Constrained Stochastic MPC based on Affine Disturbance Feedback,” 47th Conference on Decision and Control, pp. 4731 - 4736, 2008.

[31] D. Bertsimas, and D. Brown, “Constrained Stochastic LQC: A Tractable Approach,” IEEE Trans. Automatic Control, vol. 52, no. 10, pp. 1826 -1841, 2007.

Vita

Cale Nelson was born in Chattanooga, Tennessee. He moved to Dasher, Georgia when he was 4 years old. After graduating from Georgia Christian School, he went on to study Electrical Engineering in college, and graduated with a Bachelor of Science degree in Electrical Engineering from the Georgia Institute of Technology. He decided to continue his academic career at the University of Tennessee at Knoxville (UTK). While pursuing his graduate studies in Electrical Engineering he worked as a Graduate Research Assistant at Oak Ridge National Laboratory (ORNL) and as a Graduate Teaching Assistant at the University of Tennessee. He graduated from the University of Tennessee with a Master of Science degree in Electrical Engineering in 2014.