University of Tennessee, Knoxville
TRACE: Tennessee Research and Creative Exchange

Doctoral Dissertations | Graduate School

2-1981

Applications of Differential Inequalities to Persistence and Extinction Problems for Reaction-Diffusion Systems

Linda Joy Allen
University of Tennessee - Knoxville

Follow this and additional works at: https://trace.tennessee.edu/utk_graddiss

Part of the Mathematics Commons

Recommended Citation

Allen, Linda Joy, "Applications of Differential Inequalities to Persistence and Extinction Problems for Reaction-Diffusion Systems. " PhD diss., University of Tennessee, 1981.
https://trace.tennessee.edu/utk_graddiss/1495

This Dissertation is brought to you for free and open access by the Graduate School at TRACE: Tennessee Research and Creative Exchange. It has been accepted for inclusion in Doctoral Dissertations by an authorized administrator of TRACE: Tennessee Research and Creative Exchange. For more information, please contact trace@utk.edu.

To the Graduate Council:

I am submitting herewith a dissertation written by Linda Joy Allen entitled "Applications of Differential Inequalities to Persistence and Extinction Problems for Reaction-Diffusion Systems." I have examined the final electronic copy of this dissertation for form and content and recommend that it be accepted in partial fulfillment of the requirements for the degree of Doctor of Philosophy, with a major in Mathematics.

Thomas G. Hallam, Major Professor

We have read this dissertation and recommend its acceptance:

H. H. Shugart, Charles E. Clark, Louis Gross, Gene Klaasen

Accepted for the Council:

Carolyn R. Hodges

Vice Provost and Dean of the Graduate School

(Original signatures are on file with official student records.)

To the Graduate Council:

I am submitting herewith a dissertation written by Linda Joy Allen entitled "Applications of Differential Inequalities to Persistence and Extinction Problems for Reaction-Diffusion Systems." I recommend that it be accepted in partial fulfillment of the requirements for the degree of Doctor of Philosophy, with a major in Mathematics.

Thomas G. Hallam, Major Professor

We have read this dissertation
and recommend its acceptance:

Accepted for the Council:

Vice Chancellor
Graduate Studies and Research

APPLICATIONS OF DIFFERENTIAL INEQUALITIES TO PERSISTENCE AND EXTINCTION PROBLEMS FOR REACTION-DIFFUSION SYSTEMS

A Dissertation

Presented for the

Doctor of Philosophy

Degree

The University of Tennessee, Knoxville

Linda Joy Allen

March 1981

3049529

DEDICATION

To my parents.

ACKNOWLEDGEMENT

I am very grateful to Professor Thomas G. Hallam for his many hours of guidance throughout the preparation of this dissertation. I would also like to thank Professors Kathleen Pericak-Spector and Scott Spector for their helpful comments and suggestions. Finally I wish to express my gratitude to my husband, Edward Allen, for his help in the final preparation of this dissertation.

This research was supported by the U.S. Environmental Protection Agency under Grant No. R8066726010.

ABSTRACT

Systems of nonlinear reaction-diffusion equations representing models of competition, predation, and mutualism are presented and discussed. The models are divided into two categories, patch models and continuous models which can be represented by systems of ordinary differential equations or by systems of partial differential equations, respectively. Within each of these categories there are four types of diffusion mechanisms, random, biased, directed, and predator-prey diffusion. Conditions for system persistence and extinction are sought.

For the patch models, existence, uniqueness, positivity, and boundedness of solutions are discussed. Persistence of a nonnegative component $u_i(t)$ means $\limsup_{t\to\infty} u_i(t) > 0$ versus system persistence of nonnegative components $u_i(t)$ which means $\limsup_{t\to\infty} u_i(t) > 0$, $i = 1,\ldots, n$, provided the solutions exist on $[0, \infty)$. Definitions of weak and strong persistence are also given. It is shown that complete system extinction (solutions tend to zero) can occur in the patch random diffusion model. However this is not possible in any of the other patch models. The persistence criteria for the logistic random diffusion model as well as the predator-prey diffusion model are completely determined. Numerous theorems are presented which give necessary conditions for weak and strong persistence.

For the continuous models, uniqueness, positivity, and boundedness of solutions are discussed for initial boundary value problems. Dirichlet or Neumann boundary conditions are prescribed on a bounded domain B. Persistence of a nonnegative component $u_i(x, t)$ means

$\limsup_{t\to\infty} \int_B u_i(x, t)\, dx > 0$ versus system persistence of nonnegative components $u_i(x, t)$ which means $\limsup_{t\to\infty} \int_B u_i(x, t)\, dx > 0$, $i = 1,\ldots, n$, provided solutions exist on $B \times [0, \infty)$. Weak and strong persistence are defined also for this setting. Some of the same properties of solution behavior are established for the continuous reaction-diffusion systems as for the reaction systems without diffusion. The significance of the type of diffusion mechanism is illustrated by comparing numerical solutions to the logistic random, biased, and directed diffusion models. For the Neumann problem numerical solutions converge to the homogeneous equilibrium (spatially independent), but the rates of convergence differ depending on the type of diffusion. For the homogeneous Dirichlet problem numerical solutions to the random diffusion model tend to zero, however numerical solutions to both the biased and directed diffusion models tend to a positive heterogeneous equilibrium solution.

The main tool employed to determine the persistence and extinction criteria is differential inequalities. The Comparison Principle of ordinary differential equation theory and the Maximum Principle of partial differential equation theory are used to prove many of the persistence and extinction results.

TABLE OF CONTENTS

CHAPTER		PAGE
I.	INTRODUCTION	1
II.	DIFFUSION MECHANISMS	7
III.	PATCH MODELS	16
	1. Introduction	16
	2. Random Diffusion	16
	3. Biased Diffusion	49
	4. Directed Diffusion	69
	5. Predator-Prey Diffusion	83
IV.	CONTINUOUS MODELS	91
	1. Introduction	91
	2. Random Diffusion	91
	3. Biased Diffusion	95
	4. Directed Diffusion	122
	5. Predator-Prey Diffusion	140
V.	DISCUSSION	143
LIST OF REFERENCES		162
APPENDICES		167
	APPENDIX A. LOTKA-VOLTERRA EQUATIONS	168
	APPENDIX B. COMPARISON AND MAXIMUM PRINCIPLES	169
VITA		174

LIST OF TABLES

TABLE PAGE

1. Persistence and Extinction in Random Diffusion Models . . 145
2. Persistence and Extinction in Biased Diffusion Models . . 147
3. Persistence and Extinction in Directed Diffusion Models . 147
4. Persistence and Extinction in Predator-Prey Diffusion Models. 148
5. Persistence and Extinction in the Logistic Model with Diffusion 149
6. Solutions to (6) - (8) for Initial Conditions I - VIII. . 160

LIST OF FIGURES

FIGURE		PAGE
1.	Isoclines of system (2.18) for $\bar{a}_{10}$ and $\bar{a}_{20}$ negative and r zero.	31
2.	Isoclines of system (2.18) for $\bar{a}_{20}$ zero.	33
3. a)	Solutions to (3.21) are unbounded.	59
b)	Solutions to (3.21) tend to an equilibrium	59
4.	Solutions to (3.7) remain in the hatched region.	108
5.	Solutions to (3.16) remain in the hatched region	114
6.	Solutions to (3.23) remain in hatched region	120
7.	Initial conditions for the homogeneous Dirichlet problems (1) - (3)	151
8.	Equilibrium solutions to systems (2) and (3)	153
9.	Initial conditions I - VI.	157
10.	Initial conditions IV, V, VI	158
11.	Initial conditions VII and VIII.	159

LIST OF SYMBOLS

NOTATION	DEFINITION
∂B	Boundary of B
$\frac{\partial}{\partial n}$	Outward normal derivative
$\mathbb{R}_+$	Set of all positive real numbers
$\mathbb{R}_+^n$	Set of all ordered n-tuples, $[x_i]_{i=1}^n$, where x_i is a positive real number
$u(t)$	Ordered (n + m)-tuple, $[u_i^j(t)]_{i=1}^n{}_{j=1}^m$
$u(x, t)$	Ordered n-tuple, $[u_i(x, t)]_{i=1}^n$
$u(x, 0) \in \mathbb{R}_+^n$	For each $x \in B$, $u(x, 0) \in \mathbb{R}_+^n$
$\limsup_{t \to T_u} u(t) > 0$	Each component, $u_i^j(t)$, satisfies $\limsup_{t \to T_u} u_i^j(t) > 0$
$\lim_{t \to T_u} u(t) = 0$	Each component, $u_i^j(t)$, satisfies $\lim_{t \to T_u} u(t) = 0$.
$\limsup_{t \to \infty} \int_B u(x, t)dx > 0$	Each component, $u_i(x, t)$, satisfies $\lim_{t \to \infty} \int_B u_i(x, t)\, dx > 0$
$\lim_{t \to \infty} \int_B u(x, t)dx = 0$	Each component, $u_i(x, t)$, satisfies $\lim_{t \to \infty} \int_B u_i(x, t)\, dx = 0$
$\lVert u(\cdot, t) \rVert_\infty$	Sup norm, $\min_i \sup_{x \in B} \lvert u_i(x, t) \rvert$

CHAPTER I

INTRODUCTION

Persistence or extinction of a species can have a significant impact on an ecological system. Paine (1966) in his experiments with a marine intertidal community demonstrated the importance of the presence of a top predator to species diversity. Absence of the top predator - a starfish - caused a drastic reduction in the number of species. From a mathematical viewpoint, the importance of persistence or extinction is due to the fact that persistence is a global phenomena while extinction is a local phenomena. The global nature of persistence contrasts with that of the much used linearization techniques employed to establish local stability of an equilibrium.

Persistence and extinction have been studied in models of Lotka-Volterra food chains and trophic level interactions (Freedman and Waltman, 1977; Gard and Hallam, 1979; Hallam, 1980; Hallam, Svoboda, and Gard, 1979). The study of persistence and extinction in models which incorporate spatial heterogeneity has been neglected. Inclusion of spatial variance as well as temporal variance provides a more realistic ecological model, but from an analytical viewpoint a more complex model also.

Much of the recent mathematical ecologically-oriented research has been centered on reaction-diffusion equations. Experimenters and theoreticians have shown that spatial heterogeneity has an important influence on the behavior of ecological models. Huffaker (1958) performed experiments with a mite predator-prey system. In the absence of spatial heterogeneity the system collapsed; the predator drove the

system to extinction. When the mites were allowed to disperse over a complex spatial region both the predator and prey survived. Kierstead and Slobodkin (1953) showed the existence of a critical patch size for a plankton reaction-diffusion equation. If the patch size was less than a critical size, diffusion caused destruction of the patch. It has been shown that diffusion can destabilize a stable equilibrium (Segel and Jackson, 1972). However if the diffusion coefficients are sufficiently large, the effects of spatial heterogeneity are diminished (Murray, 1977). Spatial heterogeneity is also thought to have a stabilizing influence. May (1976) stated,

> In general, spatial heterogeneity tends to be stabilizing. Variations in many environmental factors are unlikely to occur synchronously in all the patches and thus the species "spreads the risks" through its occupancy of many small habitats.

Many topics on reaction-diffusion equations are currently being investigated. Much of the work is primarily in connection with the random diffusion equation. However this model can be applied to very few ecological species because there are few species whose motion can be described as random. In this document the diffusion mechanism is generalized to include two other types of interaction referred to as biased and directed diffusion.

Persistence and extinction are now defined for a system of ordinary differential equations with a discrete spatial domain and a system of partial differential equations with a continuous spatial domain. Consider the hypothetical systems (1) and (2), the discrete and continuous models respectively,

$$(1) \qquad \frac{du_i^j}{dt} = f_i^j(u) + D_i^j(u) \; ; \quad i = 1,\ldots, n \; , \; j = 1,\ldots, m \; ,$$

and

$$(2) \qquad \begin{aligned} u_{i_t} &= f_i(u) + D_i(u, |\nabla u|^2, \Delta u) \; ; \quad x \in B \\ u_i &= g_i(x, t) \quad \text{or} \quad \frac{\partial u_i}{\partial n} = 0 \; ; \quad x \in \partial B \end{aligned} \qquad , \quad i = 1,\ldots, n \; .$$

In (1) , u_i^j is the population density of species i in patch j and $u = [u_i^j(t)]_{i=1}^n{}_{j=1}^m$ and in (2) , u_i is the population density of species i and $u = [u_i(x, t)]_{i=1}^n$. The functions f_i^j and f_i represent the biological reaction mechanism, such as Lotka-Volterra and the functions D_i^j and D_i represent the diffusion mechanism. A brief description of Lotka-Volterra dynamics is presented in Appendix A .

In system (2), the domain B is assumed to be bounded and the boundary conditions are either Dirichlet or Neumann. If Neumann boundary conditions, $\frac{\partial u_i}{\partial n} = 0$, are assumed, then the species remain within B ; there is zero flux across the boundary. If Dirichlet boundary conditions, $u_i = g_i(x, t)$, are assumed, then the population density at the boundary is known. Homogeneous Dirichlet boundary conditions, $u_i = 0$, have been applied to models of red tide organisms (Kierstead and Slobodkin, 1953). The species tend to crowd together en masse. The outer edge of the inhabited region is unfavorable and therefore no species are present there.

System persistence and extinction are defined for (1) in Definition 3.

DEFINITION 3. System (1) is persistent if for each solution $u(t) = [u_i^j(t)]$, $\limsup_{t\to\tau} u(t) > 0$ with $u(0) \in \mathbb{R}_+^{n+m}$ and $\tau \in (0, T_u]$, where $[0, T_u)$ is the maximal inverval of existence of $u(t)$. System (1) is not persistent if there exists a solution $u(t)$ such that $\lim_{t\to\tau} u_i^j(t) = 0$ for some i and j with $u(0) \in \mathbb{R}_+^{n+m}$ and some $\tau \in (0, T_u]$. System (1) is of extinction type if there exists a solution $u(t)$ such that $\lim_{t\to\tau} u(t) = 0$ with $u(0) \in \mathbb{R}_+^{n+m}$ and some $\tau \in (0, T_u]$.

If a system is of extinction type, then it is not persistent. However the converse is not true. It is possible for a system to be not persistent and not of extinction type. For example one species may tend to zero in patch j , but its limsup may be positive in another patch. To account for this type of behavior, we define weak and strong persistence.

DEFINITION 4. System (1) is weakly persistent if for each solution $u(t) = [u_i^j(t)]$, $\limsup_{t\to\tau} \sum_{j=1}^{m} u_i^j(t) > 0$ for $i = 1,\ldots, n$ with $u(0) \in \mathbb{R}_+^{n+m}$ and $\tau \in (0, T_u]$, where $[0, T_u)$ is the maximal interval of existence of $u(t)$. System (1) is strongly persistent if for each solution $u(t)$, $\liminf_{t\to\tau} u(t) > 0$ with $u(0) \in \mathbb{R}_+^{n+m}$ and $\tau \in (0, T_u]$.

A system which is weakly persistent has each species surviving in at least one of the patches and a system which is strongly persistent has each species surviving in each patch and its population size is bounded below by a positive constant.

In addition to system persistence and extinction, component persistence and extinction can be defined.

DEFINITION 5. The component $u_k^\ell(t)$ of system (1) is persistent if for each solution $u(t) = [u_i^j(t)]$, $\limsup_{t\to\tau} u_k^\ell(t) > 0$ with $u(0) \in \mathbb{R}_+^{n+m}$ and $\tau \in (0, T_u]$, where $[0, T_u)$ is the maximal interval of existence of $u(t)$. The component $u_k^\ell(t)$ of system (1) is not persistent or is of extinction type if there exists a solution $u(t)$ such that $\lim_{t\to\tau} u_k^\ell(t) = 0$ with $u(0) \in \mathbb{R}_+^{n+m}$ and some $\tau \in (0, T_u]$.

Persistence and extinction for system (2) are defined.

DEFINITION 6. System (2) is persistent if for each solution $u(x, t) = [u_i(x, t)]$, $\limsup_{t\to\tau} \int_B u(x, t)\, dx > 0$ with $u(x, 0) \in \mathbb{R}_+^n$ and $\tau \in (0, T_u]$, where $[0, T_u)$ is the maximal interval of existence of $u(x, t)$. System 2 is not persistent if there exists a solution $u(x, t)$ such that $\lim_{t\to\tau} \int_B u_i(x, t)\, dx = 0$ for some i with $u(x, 0) \in \mathbb{R}_+^n$ and some $\tau \in (0, T_u]$. System (2) is of extinction type if there exists a solution $u(x, t)$ such that $\lim_{t\to\tau} \int_B u(x, t)\, dx = 0$ with $u(x, 0) \in \mathbb{R}_+^n$ and some $\tau \in (0, T_u]$.

We also define weak and strong persistence and component persistence and extinction for system (2).

DEFINITION 7. System (2) is weakly persistent if for each solution $u(x, t) = [u_i(x, t)]$, $\limsup_{t\to\tau} \|u(\cdot, t)\|_\infty > 0$ with $u(x, 0) \in \mathbb{R}_+^n$ and $\tau \in (0, T_u]$, where $[0, T_u)$ is the maximal interval of existence of $u(x, t)$. System (2) is strongly persistent if for each solution $u(x, t)$, $\liminf_{t\to\tau} \int_B u(x, t)\, dx > 0$ with $u(x, 0) \in \mathbb{R}_+^n$ and $\tau \in (0, T_u]$.

DEFINITION 8. The component $u_k(x, t)$ of system (2) is persistent if for each solution $u(x, t) = [u_i(x, t)]$, $\limsup_{t\to\tau} \int_B u_k(x, t)\, dx > 0$ with $u(x, 0) \in \mathbb{R}_+^n$ and $\tau \in (0, T_u]$, where $[0, T_u)$ is the maximal interval of existence of $u(x, t)$. The component $u_k(x, t)$ of system

(2) is <u>not persistent</u> or is of <u>extinction type</u> if there exists a solution $u(x, t)$ such that $\lim_{t\to\tau} \int_B u_k(x, t)\, dx = 0$ with $u(x, 0) \in \mathbb{R}^n_+$ and some $\tau \in (0, T_u]$.

In the discrete models, our hypotheses will be seen to assure that solutions exist for all time, hence $T_u = +\infty$. In the continuous models, we assume $T_u = +\infty$.

To illustrate system persistence and extinction, consider an application of Definition 6 to the random diffusion model

$$
\begin{aligned}
&u_t = ru + Du_{xx} \ ; \quad 0 < x < L \ , \quad t > 0 \ , \\
(9) \qquad &u(0, t) = 0 = u(L, t) \ ; \quad t > 0 \ , \\
&u(x, 0) = \phi(x) \ ; \ 0 < x < L \ ,
\end{aligned}
$$

where r and D are positive constants and $\phi(x) \in \mathbb{R}_+$. The solution to (9) is given by $u(x, t) = \sum_{n=1}^{\infty} c_n e^{(r-k_n^2 D)t} \sin k_n x$, where $k_n = \frac{n\pi}{L}$ and $c_n = \frac{2}{L}\int_0^L \phi(x) \sin \frac{n\pi x}{L}\, dx$ (Berg and McGregor, 1966) . The solution corresponds to a negative exponential if $r - k_1^2 D < 0$. It follows that the system is persistent if $L \geq \pi\sqrt{\frac{D}{r}}$ and is of extinction type if $L < \pi\sqrt{\frac{D}{r}}$.

The effects of diffusion (random, biased, directed, and predator-prey) on the persistence and extinction of Lotka-Volterra models of competition, predation, and mutualism are analyzed in the following chapters.

CHAPTER II

DIFFUSION MECHANISMS

In this chapter we classify and explain different types of diffusion mechanisms and present the continuous and discrete models representing them. The reaction mechanism is ignored and only the diffusion mechanism is considered.

The first type of diffusion is referred to as random diffusion. This model is derived assuming each individual has an equally likely probability of moving in any direction. Individuals move at random and are in continual motion. The random diffusion model is

$$(1) \qquad u_t = D\Delta u \ ,$$

where the diffusion rate, D , is a positive constant.

The random diffusion patch model can be derived from a finite difference approximation of (1) . The finite difference scheme in one spatial dimension is

$$u_t \approx D\left[\frac{u(x + \Delta x, t) - 2u(x, t) + u(x - \Delta x, t)}{(\Delta x)^2}\right] .$$

In the discrete version, let $u^1(t) = u(x - \Delta x, t)$, $u^2(t) = u(x, t)$, and $u^3(t) = u(x + \Delta x, t)$, which represent three points in space. Assume each patch or region is sufficiently homogeneous so that the population in the ith patch can be denoted by u^i . Then u^i represents the population density of species u in patch i . For a three-patch model, the finite difference approximation yields the following

differential equation for $u^2(t)$:

$$\frac{du^2}{dt} = \bar{D}[u^3 - u^2] + \bar{D}[u^1 - u^2] ,$$

where $\bar{D} = \frac{D}{(\Delta x)^2}$.

The random diffusion patch model is generalized by making the following assumptions:

(i) the diffusion rates between different patches can be unequal,

(ii) there are m patches between which a species can move freely, and

(iii) the system is not necessarily closed; there exists a region surrounding the patches that serves as a species pool.

With the assumptions (i)-(iii), the random diffusion patch model takes the following form:

$$\frac{du^k}{dt} = \sum_{\substack{j=1 \\ j\neq k}}^{m} D^{kj}[u^j - \alpha^{kj} u^k] ; \quad k = 1,\ldots, m , \tag{2}$$

where the parameters D^{kj} and α^{kj} are positive. The modifications (i) and (ii) are obvious. The additional parameters α^{kj} are a consequence of assumption (iii). They require some explanation since they play an important role in extinction. First, assumption (iii) is explained in more detail.

Consider two patches,

$$\frac{du^1}{dt} = D^{12}[u^2 - \alpha^{12} u^1] ,$$

(3)

$$\frac{du^2}{dt} = D^{21}[u^1 - \alpha^{21} u^2] .$$

If $\frac{du^1}{dt} + \frac{du^2}{dt} = 0$, then $u^1 + u^2 = c \equiv$ constant. The total population remains constant for all time. A reasonable assumption is that patches one and two represent a closed system with respect to diffusion. If the system was closed and if m individuals left patch one, then all m individuals would enter patch two. Therefore we call system (3) "closed", if $u^1 + u^2 = c$.

The condition $u^1 + u^2 = c$ holds if and only if

(4) $$u^2[D^{12} - D^{21} \alpha^{21}] + u^1[D^{21} - D^{12} \alpha^{12}] = 0 ,$$

for all solutions u^1 and u^2 of (3) . Solutions with positive initial conditions remain positive for all time. Equation (4) should hold for any positive initial conditions. Thus equation (4) holds if and only if the coefficients of u^1 and u^2 are zero, $D^{12} - D^{21} \alpha^{21} = 0 = D^{21} - D^{12} \alpha^{12}$. This condition is equivalent to conditions (5) and (6) ,

(5) $$\alpha^{12} \alpha^{21} = 1 ,$$

(6) $$D^{12} = D^{21} \alpha^{21} .$$

If conditions (5) and (6) hold, system (3) is closed with respect to diffusion. For example, if $\alpha^{12} = 1$, a closed system requires $D^{12} = D^{21}$. If conditions (5) and (6) do not hold, the total patch population varies with time. Therefore there must exist a region surrounding the patches which serves as a species pool or reservoir and species move to and from this pool. The discrete random diffusion model (2) is studied in detail in Chapter III.

The second spatial model is referred to as the biased diffusion model. Here the diffusion rate is not constant but depends on population size; D is replaced by Du . If u is large, diffusion proceeds at a faster rate and if u is small, the diffusion rate is slow. The continuous model of the transport mechanism is formulated by

$$(7) \qquad u_t = Du\, \Delta u \ .$$

The patch model is derived from the finite difference scheme

$$u_t \approx Du(x, t)\left[\frac{u(x + \Delta x, t) - 2u(x, t) + u(x - \Delta x, t)}{(\Delta x)^2}\right] .$$

Then, using notation as above, the following model is obtained:

$$(8) \qquad \frac{du^2}{dt} = \bar{D}\, u^2[u^3 - u^2] + \bar{D}\, u^2[u^1 - u^2] .$$

Equation (8) is generalized by making the assumptions (i) - (iii) . The resulting biased diffusion patch model is given by

$$(9) \qquad \frac{du^k}{dt} = \sum_{\substack{j=1 \\ j\neq k}}^{m} D^{kj}\, u^k[u^j - \alpha^{kj}\, u^k] \ ; \quad k = 1,\ldots, m \ .$$

The third spatial model is referred to as the directed diffusion model. This model was derived from first principles by Gurney and Nisbet (1975). They considered a random walk,

> ... in which at each "step" an animal may either stay at its present location or move in the direction of lowest population density, the probability distribution among these two possibilities being determined by the magnitude of the population density at the grid site concerned (Gurney and Nisbet, 1975).

Species move in the direction of the population gradient. Jorné and Safriel (1979) cite some examples where this type of behavior occurs. "Ecological examples of such behavior can be found in population dispersal of artic ground squirrels..., and chemotaxis of bacteria" (Jorné and Safriel, 1979).

The continuous model of the directed diffusion transport mechanism is given by

$$(10) \qquad u_t = D \operatorname{div}(u \nabla u)$$

or equivalently,

$$(11) \qquad u_t = \frac{D}{2} \Delta(u^2) \ .$$

Using a finite difference scheme for equations (10) and (11) yields two different equations. For equation (11)

$$u_t \approx \frac{D}{2} \left[\frac{u^2(x - \Delta x, t) - 2u^2(x, t) + u^2(x + \Delta x, t)}{(\Delta x)^2}\right] .$$

Then the differential equation for u^2 is

$$\frac{du^2}{dt} = \frac{\bar{D}}{2}[(u^3)^2 - (u^2)^2] + \frac{\bar{D}}{2}[(u^1)^2 - (u^2)^2] .$$

A generalization of the above model under assumptions (i) - (iii) yields one version of the directed diffusion patch model,

$$(12) \qquad \frac{du^k}{dt} = \sum_{\substack{j=1 \\ j\neq k}}^{m} D^{kj}[(u^j)^2 - \alpha^{kj}(u^k)^2] \; ; \quad k = 1,\ldots, m .$$

For equation (10), using a forward, then backward difference scheme

$$u_t \approx D\{\frac{u(x, t)}{\Delta x}[\frac{u(x + \Delta x, t) - u(x, t)}{\Delta x}]$$

$$- \frac{u(x - \Delta x, t)}{\Delta x}[\frac{u(x, t) - u(x - \Delta x, t)}{\Delta x}]\} .$$

Then

$$\frac{du^2}{dt} = \bar{D}\, u^2[u^3 - u^2] + \bar{D}\, u^1[u^1 - u^2] .$$

This model is hard to generalize because the diffusion rates differ for each patch in the equation $\frac{du^2}{dt}$. For two patches under the assumptions (i) - (iii) ,

$$(13) \qquad \frac{du^k}{dt} = D^k\, u^1[u^j - \alpha^k u^k] \; ; \; k \neq j \; , \quad k, j = 1, 2 .$$

The diffusion rate is governed by only one of the patches - in this case u^1 . Equation (13) is studied subsequently only for the logistic two-patch model because of its lack of generality.

Another model particularly applicable to predator-prey systems is given by

$$
(14) \qquad \begin{aligned} u_{1_t} &= D_1 \operatorname{div}(u_1 \nabla u_2) \\ u_{2_t} &= -D_2 \operatorname{div}(u_2 \nabla u_1) \ , \end{aligned}
$$

where u_1 represents the prey and u_2 the predator. Using Gurney and Nisbet's (1975) analysis, this model has the following interpretation. The prey moves to regions of low predator density (moving against the gradient of u_2) and the predator moves to regions of high prey density (moving with the gradient of u_1) . A forward then backward difference scheme yields the patch model

$$
\begin{aligned} \frac{du_1^2}{dt} &= \bar{D}_1 \ u_1^2[u_2^3 - u_2^2] + \bar{D}_1 \ u_1^1[u_2^1 - u_2^2] \ , \\ \frac{du_2^2}{dt} &= \bar{D}_2 \ u_2^2[u_1^2 - u_1^3] + \bar{D}_2 \ u_2^1[u_1^2 - u_1^1] \ . \end{aligned}
$$

Again this model is hard to generalize because of the dependence of the diffusion coefficients on different patches. If we make the assumption that the diffusion rate for each species u_i^j depends on that particular species, then the above equations are replaced by

$$\frac{du_1^2}{dt} = \bar{D}_1\ u_1^2[u_2^3 - u_2^2] + \bar{D}_1\ u_1^2[u_2^1 - u_2^2]$$

$$\frac{du_2^2}{dt} = \bar{D}_2\ u_2^2[u_1^2 - u_1^3] + \bar{D}_2\ u_2^2[u_1^2 - u_1^1]\ .$$

These equations can be derived from the continuous model

$$u_{1_t} = D_1\ u_1\ \Delta u_2$$

$$u_{2_t} = -D_2\ u_2\ \Delta u_1\ ,$$

where this model has approximately the same interpretation as model (14). The generalized predator-prey patch diffusion model under the assumptions (i) - (iii) yields

$$\frac{du_1^k}{dt} = \sum_{\substack{j=1\\ j\neq k}}^{m} D_1^{kj}\ u_1^k[u_2^j - \alpha_1^{kj}\ u_2^k]\ ,$$

(15) $\qquad k = 1,\ldots, m\ .$

$$\frac{du_2^k}{dt} = \sum_{\substack{j=1\\ j\neq k}}^{m} D_2^{kj}\ u_2^k[u_1^k - \alpha_2^{kj}\ u_1^j]\ ,$$

The prey move into patch k if $u_2^j > \alpha_1^{kj}\ u_2^k$. In other words, if the size of the predator population in patch j is greater than a constant times the size of the predator population in patch k , then the prey enter patch k . The prey leave patch k if the reverse inequality holds. The predator moves into patch k if $u_1^k > \alpha_2^{kj}\ u_1^j$;

or if the size of the prey population in patch k is greater than a constant times the size of the prey population in patch j. The predator leaves patch k if the reverse inequality holds. The prey flee from the predators and the predators chase after the prey.

There exist other types of diffusion mechanisms of interest to ecological systems, an example of which is the cross diffusion of Mimura and Kawasaki (1980). However we confine ourselves to the models discussed in the preceding pages. The patch models, where the diffusion mechanism is represented by equations (2), (9), (12), (13), and (15), are analyzed in Chapter III. The continuous models, where the diffusion mechanism is represented by equations (1), (7), (10), and (14), are analyzed in Chapter IV.

CHAPTER III

PATCH MODELS

1. Introduction

Discrete models of ecological systems which incorporate spatial heterogeneity are studied in this chapter - i.e., systems of ordinary differential equations with random, biased, directed, or predator-prey diffusion. Species move between different geographic areas called patches. Therefore these models are referred to as patch models. Reaction-diffusion systems with Lotka-Volterra dynamics and generalizations of them are analyzed.

2. Random Diffusion

The effects of random diffusion on a Lotka-Volterra competitive system are analyzed in this first model:

$$(2.1) \qquad \dot{u}_i^j = u_i^j[a_{i0} - \sum_{k=1}^{n} a_{ik}\, u_k^j] + \sum_{\substack{k=1 \\ k\neq j}}^{m} D_i^{jk}[u_i^k - \alpha_i^{jk}\, u_i^j] ,$$

for $i = 1,\ldots, n$ and $j = 1,\ldots, m$, where a_{i0}, a_{ik}, D_i^{jk}, and α_i^{jk} are positive constants and $\dot{u}_i^j = \frac{du_i^j}{dt}$. The superscript j represents the patch and the subscript i represents the species (n and m are thus the number of species and patches, respectively).

We mention at the outset that (2.1) has been studied for the particular case $\alpha_i^{jk} = 1$ and $D_i^{jk} = D_i^{kj}$ (Hastings, 1978; Levin, 1978, 1974; Yodzis, 1978). For example, Hastings (1978) proved under certain conditions that a feasible homogeneous equilibrium is asymptotically stable. His theorem is stated without giving its proof.

THEOREM 2.2. Assume $\alpha_i^{jk} = 1$ and $D_i^{jk} = D_i^{kj}$ in (2.1). If for the homogeneous model, $D_i^{jk} \equiv 0$ in (2.1), there exists a Lyapunov function of the form $V = \sum_{i=1}^{n} c_i[u_i^j - u_i^* - u_i^* \ln \frac{u_i^j}{u_i^*}]$ for the feasible equilibrium $u_i^j = u_i^*$, $i = 1,\ldots, n$ (j fixed), then $u^* = [u_i^*]_{i=1}^n$ is an asymptotically stable equilibrium for (2.1) for each patch $j = 1,\ldots, m$.

For two competing species Theorem 2.2 applies if $\frac{a_{12}}{a_{22}} < \frac{a_{10}}{a_{20}} < \frac{a_{11}}{a_{21}}$, when, in the Lotka-Volterra equations the feasible equilibrium is asymptotically stable. Theorem 2.2 is a persistence result under the given hypotheses. In the following analysis, conditions are determined on the parameters which give rise to various types of persistence and extinction.

Proposition 2.3 states that an initial value problem for (2.1) has a unique solution defined on its maximal interval of existence $[0, T_u)$.

PROPOSITION 2.3. Given any $u_0 \in \mathbb{R}_+^{n+m}$ there exists a unique solution $u(t) = [u_i^j(t)]$ to (2.1) defined on a maximal interval $[0, T_u)$ such that $u(0) = u_0$.

PROOF. The proof follows from the fact that

$$u_i^j[a_{i0} - \sum_{k=1}^{n} a_{ik} u_k^j] + \sum_{\substack{k=1 \\ k\neq j}}^{m} D_i^{jk}[u_i^k - \alpha_i^{jk} u_i^j]$$

satisfies a local Lipschitz condition in u_i^j (Corduneanu, 1977). /

The next proposition shows that solutions to (2.1) are positive if the initial conditions are positive.

PROPOSITION 2.4. Every initial value solution of (2.1) with $u(0) \in \mathbb{R}_+^{n+m}$ satisfies $u(t) \in \mathbb{R}_+^{n+m}$ for $t \in [0, T_u)$.

PROOF. Suppose there exists a solution $u(t)$ of (2.1) such that $u_i^j(t) = 0$ for some i and j and some $t \in (0, T_u]$. Assume $t < T_u$ and define

$$t_0 = \text{l.u.b.}\{t \mid u_i^j(t) > 0,\ i = 1,\ldots, n,\ j = 1,\ldots, m, \text{ and } t \in (0, T_u)\} .$$

There exists a component of $u(t_0)$ which equals zero, denote it by $u_k^\ell(t_0)$. Then $u_k^\ell(t_0) = 0$, $u_i^j(t_0) \geq 0$, $i = 1,\ldots, n$, $j = 1,\ldots, m$, and $\dot{u}_k^\ell(t_0) \leq 0$. Therefore $\dot{u}_k^\ell(t_0) = \sum_{\substack{j=1 \\ j\neq \ell}}^{m} D_k^{\ell j}\, u_k^j(t_0) \geq 0$. But $\dot{u}_k^\ell(t_0) \leq 0$ implies $u_k^j(t_0) = 0$ for $j = 1,\ldots, m$. The set $M_k = \{[u_i^j]_{i=1}^n{}_{j=1}^m \mid u_k^j = 0 ,\ j = 1,.., m\}$ is invariant for system (2.1) and $u(t_0) \in M_k$ contradicts the uniqueness of initial value solutions. Therefore $t = T_u$ and $u(t) \in \mathbb{R}_+^{n+m}$ for $t \in [0, T_u)$. /

Assume for the remainder of this chapter that initial conditions are positive. The next theorem and corollary imply the maximal interval of existence for system (2.1) is $[0, \infty)$. Thus Proposition 2.4 implies (2.1) has finite time persistence.

THEOREM 2.5. Initial value solutions of (2.1) are bounded.

PROOF. Let $u_i = \sum_{j=1}^{m} u_i^j$. Then

$$\dot{u}_i = a_{i0}\, u_i - \sum_{j=1}^{m} u_i^j \sum_{k=1}^{n} a_{ik}\, u_k^j + \sum_{j=1}^{m} \sum_{\substack{k=1 \\ k\neq j}}^{m} D_i^{jk}[u_i^k - \alpha_i^{jk}\, u_i^j]$$

or equivalently,

$$\dot{u}_i = a_{i0}u_i + \sum_{j=1}^{m} u_i^j \sum_{\substack{k=1 \\ k\neq j}}^{m} [D_i^{kj} - \alpha_i^{jk}\, D_i^{jk}] - \sum_{k=1}^{n} a_{ik} \sum_{j=1}^{m} u_i^j\, u_k^j \,. \tag{2.6}$$

Thus

$$\dot{u}_i < K_i u_i - a_{ii} \sum_{j=1}^{m} (u_i^j)^2 \,, \tag{2.7}$$

where $K_i = a_{i0} + \max_j\{0, \sum_{\substack{k=1 \\ k\neq j}}^{m} [D_i^{kj} - \alpha_i^{jk}\, D_i^{jk}]\}$ is positive.

Suppose $\limsup_{t\to T_u} u_i^j(t) = \infty$ for some i and j . Then it follows from the definition of u_i that $\limsup_{t\to T_u} u_i(t) = \infty$. Choose a subsequence $\{t_\ell\}_{\ell=1}^{\infty}$ such that $t_\ell \to T_u$, $\lim_{\ell\to\infty} u_i(t\ ) = \infty$, and $\dot{u}_i(t_\ell) \geq 0$. There exists a subset $J \subset \{1, 2,\ldots, m\}$ such that $\limsup_{\ell\to\infty} u_i^j(t_\ell) = \infty$ for $j \in J$ and $\limsup_{\ell\to\infty} u_i^{j'}(t_\ell) < \infty$ for $j' \notin J$. By choosing successive subsequences of $\{t_\ell\}$, there exists a subsequence of $\{t_\ell\}$, which after relabeling is called $\{t_\ell\}$ again, and there exists a nonempty subset $S \subset J$ such that $\lim_{\ell\to\infty} u_i^s(t_\ell) = \infty$ for $s \in S$ and $\limsup_{\ell\to\infty} u_i^{s'}(t_\ell) < \infty$ for $s' \notin S$.

Choose $\bar{t} \in \{t_\ell\}$ such that

$$(2.8) \qquad u_i^s(\bar{t}) > \max\{2\frac{K_i}{a_{ii}} + \frac{K_i}{a_{ii}} \sum_{s' \notin S} \sup_\ell u_i^{s'}(t_\ell) \ , \ 1\}$$

for $s \in S$. Apply inequality (2.8) to (2.7) at $t = \bar{t}$, where the arguments are deleted for simplicity of notation. Then

$$\dot{u}_i < K_i[\Sigma\, u_i^s + \Sigma\, u_i^{s'}] - a_{ii}\, \Sigma(u_i^s)^2$$

or

$$\dot{u}_i < K_i[\Sigma\, u_i^s + \Sigma\, u_i^{s'}] - [2K_i + K_i\, \Sigma \sup_\ell u_i^{s'}(t_\ell)]\Sigma\, u_i^s \quad .$$

Thus

$$\dot{u}_i < K_i[-\Sigma\, u_i^s + \Sigma\, u_i^{s'} - \Sigma \sup_\ell u_i^{s'}(t_\ell)\Sigma\, u_i^s]$$

and

$$\dot{u}_i < -K_i \Sigma\, u_i^s < 0 \ ,$$

where the superscripts s and s' mean the summations are taken over $s \in S$ and $s' \notin S$, respectively. The last inequality contradicts the choice of the original subsequence $\{t_\ell\}$, since at $\bar{t} \in \{t_\ell\}$, $\dot{u}_i(\bar{t}) \geq 0$. Hence solutions are bounded. /

COROLLARY 2.9. Initial value solutions of (2.1) exist on $[0, \infty)$.

PROOF. Let $[0, T_u)$ be the maximal interval for any solution $u(t)$ of (2.1). Since the solution $u(t)$ is bounded (Theorem 2.5), if $T_u < \infty$ then the solution can be continued to the right contradicting the definition of T_u . Hence $T_u = \infty$. /

The next theorem gives conditions under which a species goes to extinction.

THEOREM 2.10. Assume $m = 2$ in (2.1). If

(i) $a_{i0}^j = a_{i0} - D_i^{jk} \alpha_i^{jk} < 0$, $j \neq k$, $j, k = 1, 2$

and

(ii) $r_i = D_i^{12} D_i^{21} - a_{i0}^1 a_{i0}^2 < 0$,

hold for some i , $i = 1,\ldots, n$, then any initial value solution $u(t) = [u_i^j(t)]$ to (2.1) satisfies $\lim_{t\to\infty} u_i^j(t) = 0$ for $j = 1, 2$.

PROOF. Rearrange system (2.1) as follows:

$$\dot{u}_i^j = u_i^j[a_{i0} - D_i^{jk} \alpha_i^{jk} - \sum_{k=1}^{n} a_{ik} u_k^j] + D_i^{jk} u_i^k .$$

Then

$$\dot{u}_i^j < a_{i0}^j u_i^j + D_i^{jk} u_i^k$$

for $j \neq k$ and $j, k = 1, 2$. The comparison differential equations

$$\dot{w}_i^j = a_{i0}^j w_i^j + D_i^{jk} w_i^k$$

for $j \neq k$ and $j, k = 1, 2$ are linear. The eigenvalues of this linear system have negative real parts if and only if (i) and (ii)

hold. Therefore $\lim_{t\to\infty} w_i^j(t) = 0$ for $j = 1, 2$. The desired result follows by applying Corollary 6 of the Comparison Principle in Appendix B. /

Theorem 2.10 gives conditions for species extinction. System (2.1) with 2 patches and n species is of extinction type if conditions (i) and (ii) hold for all species, $i = 1,\ldots, n$.

Similar results to Theorem 2.10 can be proved for m patches $(m > 2)$ by comparing system (2.1) with the linear differential system

$$(2.11) \qquad \dot{w}_i^j = w_i^j[a_{i0} - \sum_{\substack{k=1\\k\neq j}}^{m} D_i^{jk}\,\alpha_i^{jk}] + \sum_{\substack{k=1\\k\neq j}}^{m} D_i^{jk}\,w_i^k ,$$

for $j = 1,\ldots, m$.

Conditions which guarantee that the eigenvalues of (2.11) have negative real parts can be derived using the Routh-Hurwitz criteria (Pielou, 1977). The conditions become very complicated and numerous as m increases, therefore we omit stating them. If the eigenvalues have negative real parts, complete system extinction is possible, even for n and m arbitrary. Random diffusion introduced into a Lotka-Volterra system of this type can cause the total system to collapse (i.e., extinction).

The parameters α_i^{jk} play an important role in extinction. Theorem 2.10 restricts the range of the parameters α_i^{jk}, $\alpha_i^{jk}\,\alpha_i^{kj} > 1$. Condition (ii) of Theorem 2.10 is equivalent to

$$r_i = D_i^{12}\,D_i^{21} - [a_{i0}]^2 + a_{i0}[D_i^{12}\alpha_i^{12} + D_i^{21}\alpha_i^{21}] - D_i^{12}D_i^{21}\alpha_i^{12}\alpha_i^{21} < 0 .$$

Suppose $\alpha_i^{12}\,\alpha_i^{21} \leq 1$, then

$$r_i \geq -a_{i0}[a_{i0} - D_i^{12}\,\alpha_i^{12} - D_i^{21}\,\alpha_i^{21}]$$

or

$$r_i \geq -a_{i0}[a_{i0}^1 - D_i^{21}\,\alpha_i^{21}] \; .$$

However condition (i) of Theorem 2.10 implies $a_{i0}^1 < 0$. Thus $r_i > 0$, contradicting condition (ii) .

The restriction $\alpha_i^{12}\,\alpha_i^{21} > 1$ implies system (2.1) cannot be closed with respect to diffusion. Conditions for a closed system given in Chapter II were $\alpha_i^{12}\,\alpha_i^{21} = 1$ and $D_i^{12} = D_i^{21}\,\alpha_i^{21}$. Therefore species are entering the species pool which surrounds the patches. A reason for system (2.1) to be of extinction type is that the number of species leaving the patches and entering the species pool exceeds the number returning to the patches. As a consequence of this movement, the patches become empty.

Inequality (i) in Theorem 2.10 is a necessary condition for extinction. If the inequality is reversed, component persistence results. Two types of component persistence are outcomes obtained in the next theorem.

<u>THEOREM 2.12</u>.

(i) If $a_{i0}^j = a_{i0} - \sum_{\substack{k=1 \\ k\neq j}}^{m} D_i^{jk}\,\alpha_i^{jk} > 0$ for some i and j in system (2.1), then there exists an ℓ such that $\limsup_{t\to\infty} u_\ell^j(t) > 0$.

(ii) If $\sum_{\substack{k=1\\k\neq j}}^{m} [D_i^{kj} - D_i^{jk}\,\alpha_i^{jk}] \geq 0$ for some i in system (2.1),

then there exists k and ℓ such that $\limsup_{t\to\infty} u_k^{\ell}(t) > 0$.

<u>PROOF</u>. Suppose $\lim_{t\to\infty} u_k^j(t) = 0$, $k = 1,\ldots, n$. Choose T such that $t \geq T$ implies $\sum_{k=1}^{n} a_{ik}\, u_k^j(t) < \frac{a_{i0}^j}{2}$. Then it follows that $\dot{u}_i^j(t) > u_i^j(t)\,\frac{a_{i0}^j}{2}$ and $\lim_{t\to\infty} u_i^j(t) = \infty$. This contradiction establishes the conclusion of (i) .

Next suppose $\lim_{t\to\infty} u_k^{\ell}(t) = 0$ for $\ell = 1,\ldots, m$ and $k = 1,\ldots,n$. Let $u_k = \sum_{j=1}^{m} u_k^j$, $k = 1,\ldots, m$. The differential equation for u_i is given in (2.6),

$$\dot{u}_i = a_{i0}\, u_i + \sum_{j=1}^{m} u_i^j \sum_{\substack{k=1\\k\neq j}}^{m} [D_i^{kj} - \alpha_i^{jk}\, D_i^{jk}] - \sum_{k=1}^{n} a_{ik} \sum_{j=1}^{m} u_i^j\, u_k^j .$$

Applying the hypothesis of (ii) yields

$$\dot{u}_i \geq u_i[a_{i0} - A_i \sum_{k=1}^{n} u_k] ,$$

where $A_i = \max_k\{a_{ik}\}$. Since $\lim_{t\to\infty} u_k(t) = 0$, T can be chosen such that $t \geq T$ implies $\sum_{k=1}^{n} u_k(t) < \frac{a_{i0}}{2A_i}$. Thus $\dot{u}_i(t) > u_i(t)\,\frac{a_{i0}}{2}$ and $\lim_{t\to\infty} u_i(t) = \infty$. This contradicts the original assumption, hence the conclusion of (ii) follows. /

Condition (i) of Theorem 2.12 implies a species persists in patch j . If $a_{i0}^j > 0$ for some i and all $j = 1,\ldots, m$, then there is a species which persists in each patch.

Individuals migrate at random in model (2.1). Therefore it seems likely that if species u_i is present in patch j, it will diffuse into all patches. In other words, persistence of u_i in one patch implies persistence in all patches. This is indeed what occurs if species u_i is strongly persistent in one patch. We prove this result in the next theorem.

<u>THEOREM 2.13</u>. If for some solution $u(t) = [u_i^j(t)]$ of (2.1), $\liminf_{t\to\infty} \sum_{j=1}^{m} u_i^j(t) = L > 0$, then $\liminf_{t\to\infty} u_i^j(t) > 0$ for $j = 1,\ldots, m$.

<u>PROOF</u>. Solutions of (2.1) are bounded according to Theorem 2.5, hence

$$\dot{u}_i^j \geq u_i^j[a_{i0}^j - \sum_{k=1}^{n} a_{ik} \sup u_k^j] + \sum_{\substack{k=1\\k\neq j}}^{m} D_i^{jk} u_i^k . \tag{2.14}$$

Suppose, for purpose of contradiction, that $\liminf_{t\to\infty} u_i^j(t) = 0$. Choose a sequence of points $\{t_\ell\}_{\ell=1}^{\infty}$, monotonically increasing, such that $t_\ell \to \infty$, $\dot{u}_i^j(t_\ell) \leq 0$, and $\lim_{\ell\to\infty} u_i^j(t_\ell) = 0$. There exists a t_ℓ such that for $t_s > t_\ell$,

$$u_i^j(t_s) < \frac{\varepsilon}{|a_{i0}^j - \sum_{k=1}^{n} a_{ik} \sup u_k^j - 1| + 1}$$

where $0 < \varepsilon < \dfrac{L\, D_i^j}{1 + D_i^j} < L$ and $D_i^j = \min_k\{D_i^{jk}, 1\}$. The differential inequality (2.14) implies for $\bar{t} = t_s > t_\ell$,

$$\dot{u}_i^j(\bar{t}) \geq -\varepsilon + D_i^j \sum_{k=1}^{m} u_i^k(\bar{t})$$

For $\bar{t} = t_s > t_\ell$ sufficiently large,

$$\sum_{k=1}^{m} u_i^k(\bar{t}) > L - \varepsilon \quad ,$$

which implies

$$\dot{u}_i^j(\bar{t}) > -\varepsilon + D_i^j[L - \varepsilon] = -\varepsilon[1 + D_i^j] + D_i^j L > 0$$

by choice of ε . The inequality $\dot{u}_i^j(\bar{t}) > 0$ contradicts the choice of the sequence $\{t_\ell\}$. The conclusion of the theorem follows. /

In the following theorems the discussion is restricted to two species in two patches, $n = 2 = m$. The next theorem gives conditions on the parameters of patch j which imply one component is strongly persistent while the other component goes to extinction (implies weak persistence in patch j) . Under slightly less restrictive assumptions, it is shown in Theorem 2.16 that the system (2.1) is weakly persistent.

<u>THEOREM 2.15</u>. Let $u(t) = [u_i^j(t)]_{i=1}^{2}{}_{j=1}^{2}$ denote a solution to (2.1).

(i) If $D_2^{jk} = 0$ and $\frac{a_{10}^j}{a_{20}} > \max\{\frac{a_{11}}{a_{21}}, \frac{a_{12}}{a_{22}}\}$ for some j , $j \neq k$, then $\liminf_{t\to\infty} u_1^j(t) \geq \frac{a_{10}^j}{a_{11}}$ and $\lim_{t\to\infty} u_2^j(t) = 0$. If in addition $D_1^{kj} > 0$, then $\liminf_{t\to\infty} u_1^k(t) > 0$.

(ii) If $D_1^{kj} = 0$ and $0 < \frac{a_{10}}{a_{20}^k} < \min\{\frac{a_{11}}{a_{21}}, \frac{a_{12}}{a_{22}}\}$ for some k, $k \neq j$, then $\liminf_{t\to\infty} u_2^k(t) \geq \frac{a_{20}}{a_{22}}$ and $\lim_{t\to\infty} u_1^j(t) = 0$. If in addition $D_2^{jk} > 0$, then $\liminf_{t\to\infty} u_2^j(t) > 0$.

Before we proceed with the proof, observe that initial value solutions of (2.1) are still positive if $D_2^{jk} = 0$. This holds true because in this case the set $\{[u_i^\ell] | u_2^j = 0$ for some $j\}$ is an invariant set for (2.1) and thus $u_2^j(t) > 0$ for $t \geq 0$.

<u>PROOF</u>. The differential inequalities

$$\dot{u}_1^j > u_1^j[a_{10}^j - a_{11}u_1^j - a_{12}u_2^j]$$

$$\dot{u}_2^j = u_2^j[a_{20} - a_{21}\, u_1^j - a_{22}\, u_2^j] < u_2^j[a_{20} + \varepsilon - a_{21}\, u_1^j - a_{22}\, u_2^j]$$

follow from (2.1) for $n = 2 = m$, where ε is chosen sufficiently small so that $\frac{a_{10}^j}{a_{20} + \varepsilon} > \max\{\frac{a_{11}}{a_{21}}, \frac{a_{12}}{a_{22}}\}$. Consider the comparison equations

$$\dot{w}_1^j = w_1^j[a_{10}^j - a_{11}\, w_1^j - a_{12}\, w_2^j]$$

$$\dot{w}_2^j = w_2^j[a_{20} + \varepsilon - a_{21}\, w_1^j - a_{22}\, w_2^j] .$$

The Comparison Principle in Appendix B implies $u_1^j(t) > w_1^j(t)$ and $u_2^j(t) < w_2^j(t)$ for $t > 0$. Since $\lim_{t\to\infty} w_1^j(t) = \frac{a_{10}^j}{a_{11}}$ and $\lim_{t\to\infty} w_2^j(t) = 0$,

the conclusion of (i) follows. If $D_1^{kj} > 0$, Theorem 2.13 implies $\liminf_{t\to\infty} u_1^k(t) > 0$.

The proof of (ii) is proved in a similar manner to (i) . /

Conditions (i) and (ii) imply weak system persistence of system (2.1) for $n = 2 = m$. Theorem 2.15 is reminiscent of the behavior for Lotka-Volterra competition. If a feasible equilibrium does not exist, one species tends to its carrying capacity while the other species dies out.

The following theorem states conditions which give rise to a weakly persistent system.

<u>THEOREM 2.16</u>. Let $u(t) = [u_i^j(t)]_{i=1}^{2}{}_{j=1}^{2}$ denote a solution to (2.1).

(i) If $D_2^{12} = 0$ and $\frac{a_{12}}{a_{22}} < \frac{a_{10}^1}{a_{20}}$, then

$$\limsup_{t\to\infty} \sum_{j=1}^{2} u_1^j(t) > 0 .$$

(ii) If $D_1^{21} = 0$ and $\frac{a_{21}}{a_{11}} < \frac{a_{20}^2}{a_{10}}$, then

$$\limsup_{t\to\infty} \sum_{j=1}^{2} u_2^j(t) > 0 .$$

<u>PROOF</u>. Consider the "persistence function" $V(t) = [u_1^1(t)]^{\beta_1} [u_2^1(t)]^{\beta_2}$, where $\beta_1 = -\beta_2 \frac{a_{22}}{a_{12}} > 0$. For purpose of contradiction, assume $\lim_{t\to\infty} \sum_{j=1}^{2} u_1^j(t) = 0$. Since $a_{10}^1 > 0$, Theorem 2.12 implies $\limsup_{t\to\infty} u_2^1(t) > 0$ (a species persists in patch one). Thus $\liminf_{t\to\infty} V(t) = \liminf_{t\to\infty} \frac{[u_1^1(t)]^{\beta_1}}{[u_2^1(t)]^{-\beta_2}} = 0$. Choose

a sequence of points $\{t_\ell\}_{\ell=1}^{\infty}$, monotonically increasing, such that $t_\ell \to \infty$, $\lim_{\ell\to\infty} V(t_\ell) = 0$, and $\dot{V}(t_\ell) \leq 0$. Then at t_ℓ (arguments deleted for simplicity of notation) ,

$$\dot{V} = V[\beta_1 \frac{\dot{u}_1^1}{u_1^1} + \beta_2 \frac{\dot{u}_2^1}{u_2^1}]$$

or equivalently,

$$\dot{V} = -\beta_2 V[\frac{a_{22}}{a_{12}} (a_{10}^1 - a_{11} u_1^1 - a_{12} u_2^1) + \frac{a_{22}}{a_{12}} D_1^{12} \frac{u_1^2}{u_1^1}$$

$$- (a_{20} - a_{21} u_1^1 - a_{22} u_2^1)] .$$

Replace the above equation by the inequality

$$(2.17) \qquad \dot{V} > -\beta_2 V[\gamma + u_1^1(a_{21} - \frac{a_{22} a_{11}}{a_{12}})] ,$$

where $\gamma = \frac{a_{22}}{a_{12}} a_{10}^1 - a_{20}$. Since $\lim_{\ell\to\infty} u_1^1(t_\ell) = 0$, choose s such that $t_\ell \geq t_s$ implies $u_1^1(t_\ell) \mid a_{21} - \frac{a_{22}a_{11}}{a_{12}} \mid < \frac{\gamma}{2}$. Inequality (2.17) implies $\dot{V}(t_\ell) > \frac{-\beta_2 \gamma}{2} V(t_\ell) > 0$ for $t_\ell \geq t_s$. This contradicts the choice of the sequence $\{t_\ell\}$ since $\dot{V}(t\ ) \leq 0$. The desired result for part (i) follows.

The proof of (ii) is proved in a similar manner to (i) . /

To complete the analysis of (2.1), we consider the simplest case, that is, the logistic population, one species in m patches. The patch random diffusion model for a logistic population is given by

$$(2.18) \qquad \dot{u}^j = u^j[a_{j0} - a_{jj}\, u^j] + \sum_{\substack{k=1 \\ k\neq j}}^{m} D^{jk}[u^k - \alpha^{jk}\, u^j] \ ,$$

for $j = 1,\ldots, m$, where a_{j0}, a_{jj}, α_i^{jk}, and D^{jk} are positive.

Observe that the parameters a_{j0} and a_{jj} in (2.18) depend on the patch. In model (2.1) it was assumed that the parameters a_{i0} and a_{ik} were independent of the patch. However all of the propositions, theorems, and corollaries are valid if a_{i0} and a_{ik} are replaced by b_{i0}^j and b_{ik}^j , respectively, where patch dependence is now included.

The persistence and extinction criteria for system (2.18) are determined in Theorems 2.19 and 2.20.

<u>THEOREM 2.19</u>. Let $u(t) = [u^j(t)]_{j=1}^2$ denote an initial value solution of (2.18). The extinction behavior, $\lim_{t\to\infty} u(t) = 0$ occurs if and only if

(i) $\bar{a}_{j0} = a_{j0} - D^{jk}\, \alpha^{jk} < 0 \ , \quad j \neq k \ , \quad j, k = 1, 2$

and

(ii) $r = D^{12}\, D^{21} - \bar{a}_{10}\, \bar{a}_{20} \leq 0$.

<u>PROOF</u>. Assume conditions (i) and (ii) hold. If $r < 0$ and $\bar{a}_{j0} < 0$, $j = 1, 2$, Theorem 2.10 implies $\lim_{t\to\infty} u(t) = 0$. Therefore assume $r = 0$. For this case the isoclines of system (2.18) are graphed in Figure 1. The assumptions imply the slopes of the isoclines at the origin are equal. Hence the isoclines do not intersect and there does not exist any critical point in $\mathbb{R}_+^2$. With no critical point, there does not exist any limit cycles (Sansone and Conti, 1964). By the theory of ordinary differential equations for two-dimensional

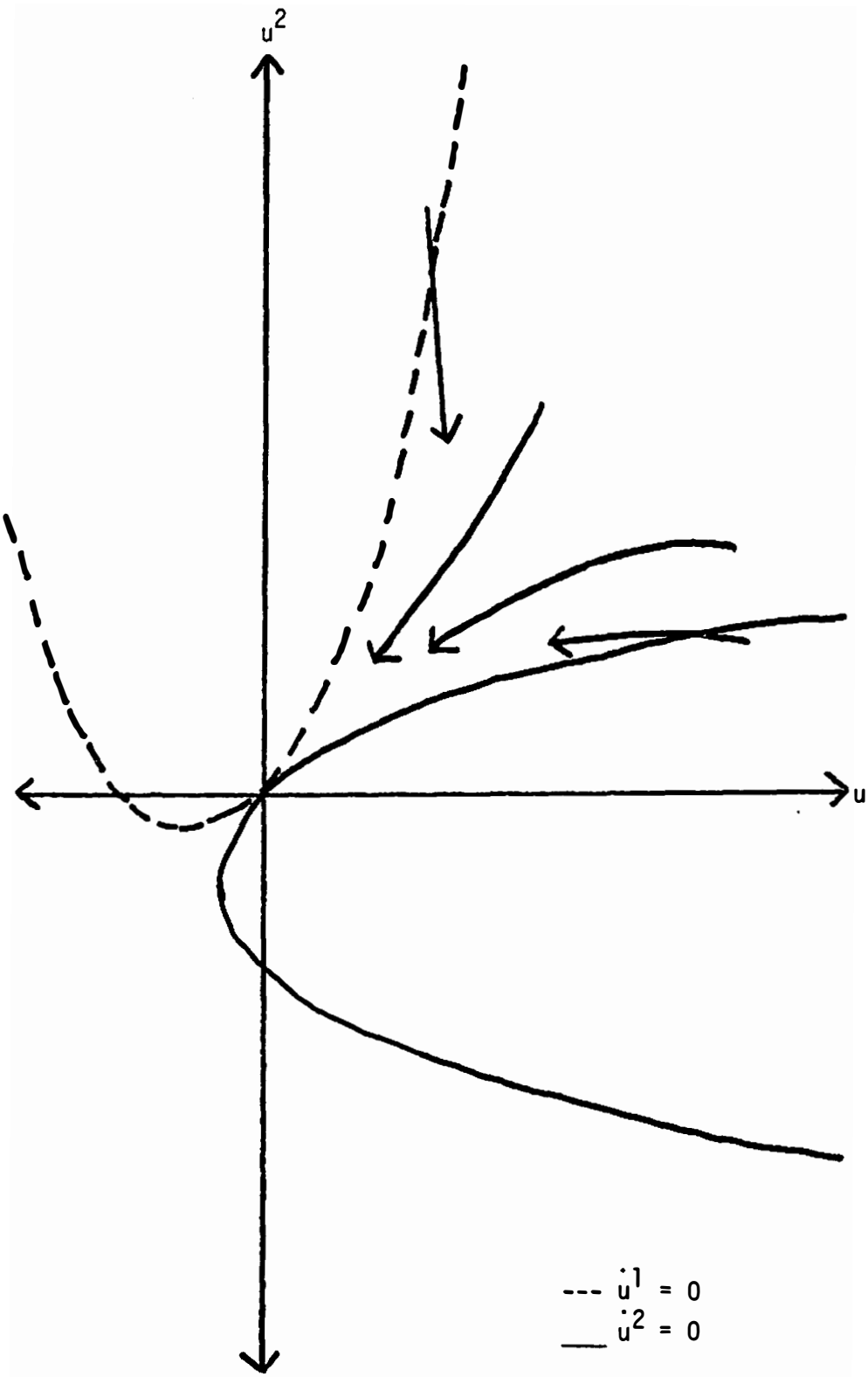

FIGURE 1

Isoclines of system (2.18) for $\bar{a}_{10}$ and $\bar{a}_{20}$ negative and r zero.

systems (Coddington and Levinson, 1955), the desired result is obtained. Solutions approach the origin, $\lim_{t\to\infty} u(t) = 0$.

Assume next that $\lim_{t\to\infty} u(t) = 0$. Theorem 2.12(i) implies $\bar{a}_{j0} \leq 0$. Suppose $\bar{a}_{j0} = 0$ for some j . Then the vertex of the parabolic isocline $\dot{u}^j = 0$ is at the origin and there exists a critical point $\bar{u} = [\bar{u}^j]$ in $\mathbb{R}^2_+$ (Figure 2). A linear analysis about the origin shows that it is a saddle point. Next we show there does not exist any limit cycle in $\mathbb{R}^2_+$.

Let $h = [u^1 \; u^2]^{-1} \in C^1(\mathbb{R}^2_+)$ and $\dot{u}^1 = P$ and $\dot{u}^2 = Q$. Then $\frac{\partial(hP)}{\partial u^1} = h[-D^{12} \frac{u^2}{u^1} - a_{11} u^1]$, $\frac{\partial(hQ)}{\partial u^2} = h[-D^{21} \frac{u^1}{u^2} - a_{22} u^2]$, and $\frac{\partial(hP)}{\partial u^1} + \frac{\partial(hQ)}{\partial u^2} < 0$ in $\mathbb{R}^2_+$. DuLac's criterion implies there does not exist any limit cycle in $\mathbb{R}^2_+$.

Solutions are bounded, there is no limit cycle in $\mathbb{R}^2_+$, the origin is unstable, and there exists one critical point, $\bar{u}$, in $\mathbb{R}^2_+$. The theory of ordinary differential equations for two-dimensional systems implies $\lim_{t\to\infty} u(t) = \bar{u}$. However this contradicts the hypothesis, $\lim_{t\to\infty} u(t) = 0$. Hence $\bar{a}_{j0} < 0$; and (i) holds.

Suppose $r > 0$, then there exists a critical point $\bar{u}$ in $\mathbb{R}^2_+$. A linear analysis about the origin shows it is unstable. In a manner similar to the above argument a contradiction is reached. Hence $r \leq 0$; and (ii) holds. /

In the proof of Theorem 2.19 it is shown that if inequalities (i) or (ii) do not hold, then solutions tend to a positive equilibrium. This result is stated in Corollary 2.20.

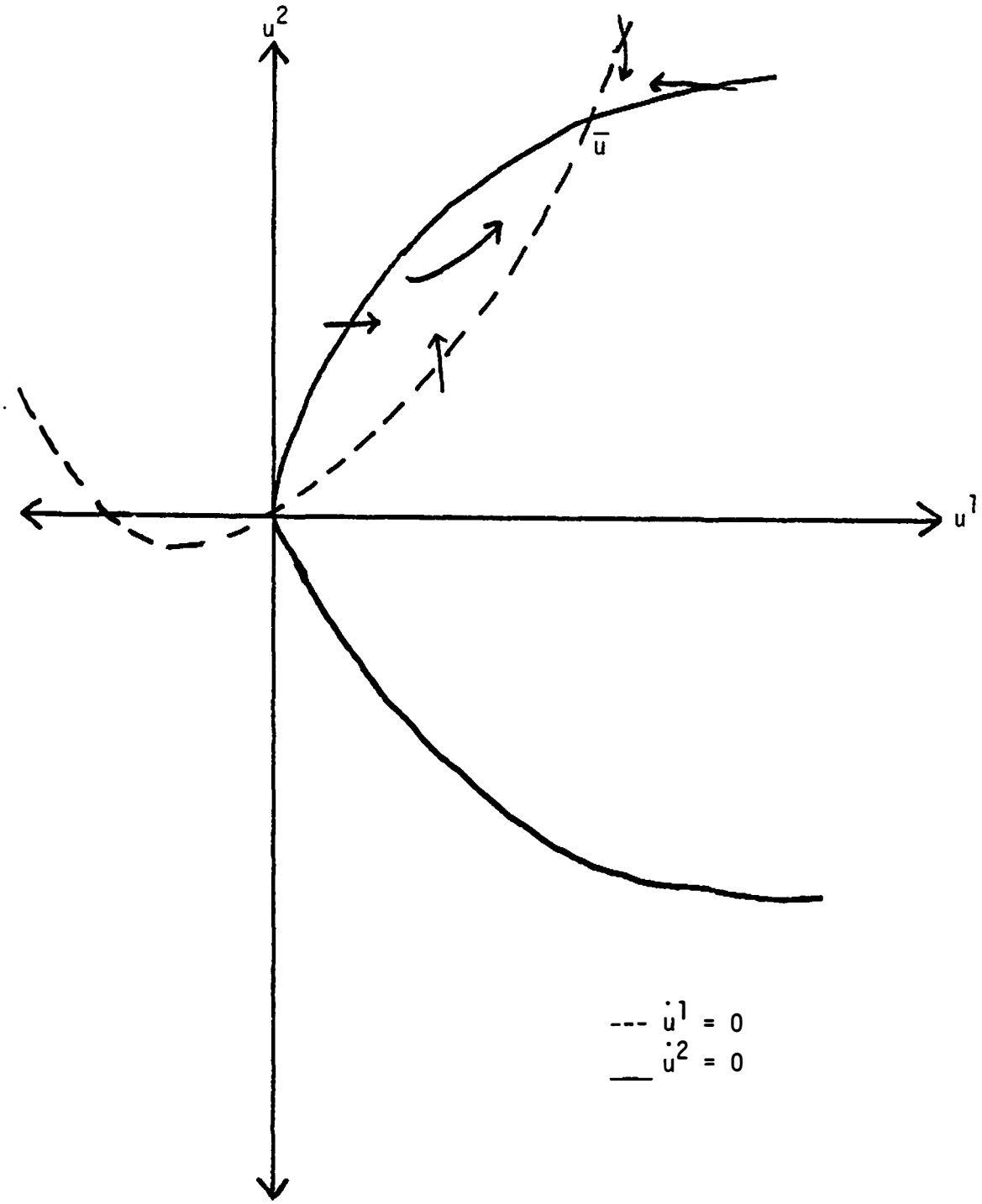

FIGURE 2
Isoclines of system (2.18) for $\bar{a}_{20}$ zero.

COROLLARY 2.20. Let $u(t) = [u^j(t)]_{j=1}^2$ denote a solution of system (2.18). If

(i) $\bar{a}_{j0} \geq 0$ for some j , $j = 1, 2$

or

(ii) $r > 0$,

then $\lim_{t\to\infty} u(t) = \bar{u} > 0$.

We continue the discussion of ordinary differential equation models with random diffusion by looking at Lotka-Volterra systems of predation and mutualism. A more suitable transport mechanism for a predator-prey system is examined in section 5.

The Lotka-Volterra predator-prey system with two species in two patches is

$$\begin{aligned} \dot{u}_1^j &= u_1^j[a_{10} - a_{12}\, u_2^j] + D_1^{jk}[u_1^k - \alpha_1^{jk}\, u_1^j] , \\ \dot{u}_2^j &= u_2^j[-a_{20} + a_{21}\, u_1^j] + D_2^{jk}[u_2^k - \alpha_2^{jk}\, u_2^j] , \end{aligned} \qquad j \neq k ,\ j, k = 1, 2, \tag{2.21}$$

where a_{i0}, a_{ij}, D_i^{jk}, and α_i^{jk} are positive parameters.

As in the competitive random diffusion model (2.1), initial value solutions to (2.21) have unique positive solutions on $[0, T_u)$.

PROPOSITION 2.22. Given any $u_0 \in \mathbb{R}_+^4$ there exists a unique solution $u(t) = [u_i^j(t)]$ to (2.21) defined on a maximal interval $[0, T_u)$ such that $u(0) = u_0$ and $u(t) \in \mathbb{R}_+^4$.

PROOF. The proof is similar to the proofs of Propositions 2.3 and 2.4. /

The following theorem states conditions under which system (2.21) is of extinction type, a result analogous to Theorem 2.10.

<u>THEOREM 2.23</u>. Let $u(t) = [u_1^j(t)]$ denote a solution of (2.21) with maximal interval of existence $[0, \infty)$. If

(i) $a_{10}^j = a_{10} - D_1^{jk}\,\alpha_1^{jk} < 0\ ,\quad j \neq k\ ,\quad j, k = 1, 2$

and

(ii) $r_1 = D_1^{12}\,D_1^{21} - a_{10}^1\,a_{10}^2 < 0\ ,$

then $\lim\limits_{t\to\infty} u_1^j(t) = 0\ ,\quad j = 1, 2$. If in addition to (i) and (ii),

(iii) $[\alpha_1][\alpha_2] - D_2^{12}\,D_2^{21} = [a_{20} + \alpha_2^{12}\,D_2^{12}][a_{20} + \alpha_2^{21}\,D_2^{21}] - D_2^{12}\,D_2^{21} > 0$

holds, then $\lim\limits_{t\to\infty} u(t) = 0$.

<u>PROOF</u>. The first part of the theorem was proved in Theorem 2.10 by a comparison argument.

Assume (i), (ii), and (iii) are satisfied, then it follows that $\lim\limits_{t\to\infty} u_1^j(t) = 0\ ,\quad j = 1, 2$. Choose T such that $t \geq T$ implies $u_1^j(t) < \dfrac{\varepsilon}{a_{21}}$, where ε is chosen sufficiently small so that

$$[\alpha_1 - \varepsilon][\alpha_2 - \varepsilon] - D_2^{12}\,D_2^{21} > 0\ ,$$

(2.24)

$$\alpha_j - \varepsilon > 0\ ,\quad j = 1, 2\ ,$$

hold. The differential equation for u_2^j yields for $t \geq T$,

$$\dot{u}_2^j < u_2^j[-\alpha_j + \varepsilon] + D_2^{jk}\,u_2^k\ .$$

The comparison equations

$$\dot{w}_2^j = [\varepsilon - \alpha_j]w_2^j + D_2^{jk}\, w_2^k$$

are linear and have eigenvalues with negative real parts if and only if inequalities (2.24) hold. Corollary 6 of the Comparison Principle in Appendix B implies $\lim_{t\to\infty} u_2^j(t) = 0$, $j = 1, 2$. /

Theorem 2.23 is valid if density dependence is included in the prey or predator equation or if the parameters are patch dependent. If conditions (i), (ii), and (iii) hold, then $T_u = \infty$, automatically. If $T_u < \infty$, the solution can be continued to the right since the solution on $[0, T_u)$ is bounded in $\mathbb{R}^2$. Thus solutions to (2.21) satisfying (i) - (iii) have finite time persistence.

There exists an extinction theorem for m patches $(m > 2)$ provided the linear comparison equations have eigenvalues with negative real parts. The conditions for a linear system of three or more equations to have eigenvalues with negative real parts become very numerous and cumbersome, therefore we do not state them. However these conditions imply that a predator-prey system in m patches goes to extinction.

A remark analogous to the one presented for the competition equations (2.1), is also valid here. If $\alpha_1^{12}\,\alpha_1^{21} \leq 1$, Theorem 2.23 does not hold. However if $\alpha_2^{12}\,\alpha_2^{21} \geq 1$, condition (iii) is valid. For prey extinction to occur the number of prey leaving the patches must be greater than the number of prey entering the patches. For

predator extinction to result when the prey are not present, the number of predators leaving the patches must be greater than or equal to the number of predators entering the patches.

An interesting observation is the fact that if inequality (iii) is reversed there is a possibility of predator survival.

<u>THEOREM 2.25</u>. If $\alpha_1\alpha_2 - D_2^{12} D_2^{21} < 0$, then there exists a solution $u(t) = [u_i^j(t)]$ of (2.21) such that $\limsup_{t\to T_u} u_2^j(t) > 0$ for some j , $j = 1, 2$.

<u>PROOF</u>. From equations (2.21) the inequalities

$$\dot{u}_2^j > -\alpha_j u_2^j + D_2^{jk} u_2^k$$

are derived for $j \neq k$ and $j, k = 1, 2$.

The comparison equations

$$\dot{w}_2^j = -\alpha_j w_2^j + D_2^{jk} w_2^k \tag{2.26}$$

for $j \neq k$ and $j, k = 1, 2$ have one positive and one negative eigenvalue which implies the origin is a saddle for (2.26). There exist separatrices for system (2.26) such that if the solution $w_2(t) = [w_2^j(t)]_{j=1}^2$ starts off of the separatrices, then $\limsup_{t\to\infty} w_2^j(t) > 0$ for some j . There exist initial positions, $w_2(0)$, such that the initial value solution satisfies $\limsup_{t\to\infty} w_2^j(t) > 0$ for some j . Therefore if $u_2(0) = w_2(0)$, then Corollary 6 in Appendix B implies $u_2(t) > w_2(t)$ for $t \in (0, T_u)$. Hence there exists a solution of (2.21) such that $\limsup_{t\to T_u} u_2^j(t) > 0$ for some j . /

If the particular solution $u(t)$ in Theorem 2.25 has a finite interval of existence, $T_u < \infty$, then the predators persist in both patches. This follows from the fact that the solution to the comparison equations cannot tend to zero in finite time.

If conditions (i) and (ii) hold in Theorem 2.23 and the hypothesis of Theorem 2.25 holds, then predator survival is possible without prey survival. In this particular case the predator population in the patches is being replenished by the species pool surrounding the patches.

Theorems 2.23 and 2.25 apply to more general predator-prey systems, where a predator satiation term is incorporated. Consider the following system:

$$
(2.27)\qquad
\begin{aligned}
\dot{u}_1^j &= u_1^j[a_{10} - a_{12}\, g^j(u_1^j)u_2^j] + D_1^{jk}[u_1^k - \alpha_1^{jk}\, u_1^j] \\
\dot{u}_2^j &= u_2^j[-a_{20} + a_{21}\, g^j(u_1^j)u_1^j] + D_2^{jk}[u_2^k - \alpha_2^{jk}\, u_2^j]
\end{aligned}
$$

for $j \neq k$ and $j, k = 1, 2$, where $g^j \in C^1(\mathbb{R}_+)$ and $0 < g^j(x) < K$ for $x > 0$ and $j = 1, 2$. An example of a function g^j is given by $g^j(x) = \dfrac{1}{x + d^j}$. For this particular function g^j, system (2.27) represents Michaelis-Menten-Monod kinetics.

Initial value problems of (2.27) have unique positive solutions $u(t) = [u_i^j(t)]$ defined on $[0, T_u)$.

<u>COROLLARY 2.28</u>. Theorems 2.23 and 2.25 are valid for solutions $u(t)$ to system (2.27).

PROOF. In the proof of Theorem 2.23, use the inequality

$$\dot{u}_2^j < u_2^j[-a_{20} - D_2^{jk}\,\alpha_2^{jk} + a_{21}\,K\,u_1^j] + D_2^{jk}\,u_2^k$$

coupled with the Comparison Principle to show predator extinction. The proof for prey extinction remains unaltered for (2.27). The proof of Theorem 2.25 also remains unchanged for (2.27). /

The last ordinary differential equation models studied with random diffusion are the Lotka-Volterra mutualistic systems

$$\dot{u}_i^j = u_i^j[-a_{i0} + \sum_{\substack{k=1\\k\neq i}}^{n} a_{ik}\,u_k^j] + \sum_{\substack{k=1\\k\neq j}}^{m} D_i^{jk}[u_i^k - \alpha_i^{jk}\,u_i^j] \tag{2.29}$$

for $i = 1,\ldots, n$, $j = 1,\ldots, m$, and

$$\begin{aligned} \dot{u}_1^j &= u_1^j[a_{10} - a_{11}\,u_1^j + a_{12}\,u_2^j] + \sum_{\substack{k=1\\k\neq j}}^{m} D_1^{jk}[u_1^k - \alpha_1^{jk}\,u_1^j] \\ \dot{u}_2^j &= u_2^j[-a_{20} + a_{21}\,u_1^j] + \sum_{\substack{k=1\\k\neq j}}^{m} D_2^{jk}[u_2^k - \alpha_2^{jk}\,u_2^j] \end{aligned} \tag{2.30}$$

for $j = 1,\ldots, m$, where all the parameters are assumed to be positive.

Initial value problems for (2.29) and (2.30) have unique positive solutions.

PROPOSITION 2.31. Given any $u_0 \in \mathbb{R}_+^{n+m}$ and $v_0 \in \mathbb{R}_+^{2+m}$ there exist unique solutions $u(t) = [u_i^j(t)]$ and $v(t) = [v_i^j(t)]$ to (2.29) and (2.30) respectively, such that $u(0) = u_0$, $v(0) = v_0$,

$u(t) \in \mathbb{R}_+^{n+m}$ for $t \in [0, T_u)$, and $v(t) \in \mathbb{R}_+^{2+m}$ for $t \in [0, T_v)$. The intervals $[0, T_u)$ and $[0, T_v)$ denote the maximal interval of existence for solutions u and v , respectively.

PROOF. The proof is similar to the proofs of Propositions 2.3 and 2.4. /

The presence of random diffusion for model (2.29) results in different behavior than the system without diffusion; persistence is possible. This is shown in the following theorem.

THEOREM 2.32. Let $u(t) = [u_i^j(t)]$ denote a solution to (2.29) with maximal interval of existence $[0, T_u)$. If

$$(2.33) \qquad \min_k \{ \sum_{\substack{j=1 \\ j\neq k}}^{m} D_i^{jk} \} - \max_j \{ a_{i0} + \sum_{\substack{k=1 \\ k\neq j}}^{m} D_i^{jk} \alpha_i^{jk} \} \geq 0$$

for some i , then $\liminf_{t\to T_u} u_i^j(t) > 0$ for $j = 1,\ldots, m$.

PROOF. Let $u_i = \sum_{j=1}^{m} u_i^j$. The differential equation for u_i is

$$\dot{u}_i = \sum_{j=1}^{m} u_i^j [-a_{i0} - \sum_{\substack{k=1 \\ k\neq j}}^{m} D_i^{jk} \alpha_i^{jk}] + \sum_{j=1}^{m} \sum_{k=1}^{n} a_{ik} u_k^j u_i^j$$

$$+ \sum_{j=1}^{m} \sum_{\substack{k=1 \\ k\neq j}}^{m} D_i^{jk} u_i^k$$

or

$$\dot{u}_i > -\max_j\{a_{i0} + \sum_{\substack{k=1\\k\neq j}}^{m} D_i^{jk}\,\alpha_i^{jk}\}u_i$$

$$+ \min_k\{\sum_{\substack{j=1\\j\neq k}}^{m} D_i^{jk}\} .$$

Thus

$$\dot{u}_i > u_i[\min_k\{\sum_{\substack{j=1\\j\neq k}}^{m} D_i^{jk}\} - \max_j\{a_{i0} + \sum_{\substack{k=1\\k\neq j}}^{m} D_i^{jk}\,\alpha_i^{jk}\}] .$$

The hypothesis implies $\dot{u}_i > 0$ and therefore $u_i(t) > u_i(0)$ for $t > 0$. We have $\liminf_{t\to T_u} u_i(t) > u_i(0) > 0$.

Suppose, for purpose of contradiction, that $\liminf_{t\to T_u} u_i^j(t) = 0$ for some j . Choose a sequence of points, $\{t_\ell\}_{\ell=1}^{\infty}$, monotonically increasing, such that $t_\ell \to T_u$, $\lim_{\ell\to\infty} u_i^j(t_\ell) = 0$, and $\dot{u}_i^j(t_\ell) \leq 0$. The differential equation for u_i^j yields the following inequality

$$\dot{u}_i^j > u_i^j[-a_{i0} - \sum_{\substack{k=1\\k\neq j}}^{m} D_i^{jk}\,\alpha_i^{jk}] + \sum_{\substack{k=1\\k\neq j}}^{m} D_i^{jk}\,u_i^k$$

or equivalently,

$$\dot{u}_i^j > u_i^j[-a_{i0} - \sum_{\substack{k=1\\k\neq j}}^{m} D_i^{jk}\,\alpha_i^{jk} - 1] + \sum_{\substack{k=1\\k\neq j}}^{m} D_i^{jk}\,u_i^k + u_i^j .$$

Thus

$$(2.34) \qquad \dot{u}_i^j > -u_i^j \max_j\{a_{i0} + \sum_{\substack{k=1\\k\neq j}}^{m} D_i^{jk}\,\alpha_i^{jk} + 1\} + u_i \min_{k\neq j}\{1,\ D_i^{jk}\}\ .$$

Choose t_s such that $t_\ell \geq t_s$ implies

$$u_i^j(t_\ell) < \frac{u_i(0)\min_{k\neq j}\{1,\ D_i^{jk}\}}{2\max_j\{a_{i0} + \sum_{\substack{k=1\\k\neq j}}^{m} D_i^{jk}\,\alpha_i^{jk} + 1\}}$$

and

$$u_i(t_\ell) \geq u_i(0)\ .$$

For $t_\ell \geq t_s$, the differential inequality (2.34) implies

$$\dot{u}_i^j(t_\ell) > \frac{u_i(0)}{2}\min_{k\neq j}\{1,\ D_i^{jk}\} > 0\ .$$

This contradicts the choice of the sequence $\{t_\ell\}$. Hence the desired result follows. /

Theorem 2.32 is a strong persistence result for the mutualistic system (2.29), provided the inequality (2.33) holds for all i . Without diffusion the system is of extinction type, but with diffusion the system can be persistent. Condition (2.33) holds only if $\alpha_i^{jk} < 1$ for all $j \neq k$. In this case the system is not closed, species are entering the patches from the surrounding species pool.

There exist conditions for system extinction also, which we state in the next theorem.

<u>THEOREM 2.35</u>. Let $u(t) = [u_i^j(t)]$ denote a solution to (2.29). If the initial conditions are sufficiently small and

$$\max_k\{\sum_{\substack{j=1\\ j\neq k}}^{m} D_i^{jk}\} - \min_j\{a_{i0} + \sum_{\substack{k=1\\ k\neq j}}^{m} D_i^{jk}\,\alpha_i^{jk}\} < 0$$

for $i = 1,\ldots, n$, then $\lim_{t\to\infty} u(t) = 0$.

<u>PROOF</u>. Let $u_i = \sum_{j=1}^{m} u_i^j$. The differential equation for u_i is

$$\dot{u}_i = \sum_{j=1}^{m} u_i^j[-a_{i0} - \sum_{\substack{k=1\\ k\neq j}}^{m} D_i^{jk}\,\alpha_i^{jk} + \sum_{\substack{k=1\\ k\neq i}}^{n} a_{ik}\,u_k^j]$$

$$+ \sum_{j=1}^{m}\sum_{\substack{k=1\\ k\neq j}}^{m} D_i^{jk}\,u_i^k .$$

Thus

$$\dot{u}_i < u_i[-\min_j\{a_{i0} + \sum_{\substack{k=1\\ k\neq j}}^{m} D_i^{jk}\,\alpha_i^{jk}\} + \max_k\{a_{ik}\}\sum_{\ell=1}^{n} u_\ell]$$

$$+ \max_k\{\sum_{\substack{j=1\\ j\neq k}}^{m} D_i^{jk}\}\,u_i$$

or equivalently,

$$\text{(2.36)}\qquad \dot{u}_i < u_i[\max_k\{\sum_{\substack{j=1\\ j\neq k}}^{m} D_i^{jk}\} - \min_j\{a_{i0}^j\} + \max_k\{a_{ik}\}\sum_{\ell=1}^{n} u_\ell] ,$$

where $a_{i0}^{j} = a_{i0} + \sum_{\substack{k=1 \\ k\neq j}}^{m} D_i^{jk} \alpha_i^{jk}$. If the initial conditions are sufficiently small such that

$$[\max_k\{\sum_{\substack{j=1 \\ j\neq k}}^{m} D_i^{jk}\} - \min_j\{a_{i0}^{j}\} + \max_k\{a_{ik}\} \sum_{\ell=1}^{n} u_\ell(0)] \leq -\varepsilon$$

for $i = 1,\ldots, n$, where $\varepsilon > 0$, then we show that

$$(2.37) \qquad \dot{u}_i(t) < -\varepsilon\, u_i(t)$$

for $i = 1,\ldots, n$ and $t > 0$.

If $u_\ell(t) \leq u_\ell(0)$ for $\ell = 1,\ldots, n$ and $t \geq 0$, we are done. Suppose this is not the case. Let $t_0 = \text{l.u.b.}\{t | u_\ell(t) \leq u_\ell(0)$, $\ell = 1,\ldots, n$, $t \geq 0\}$. There exists an i such that $u_i(t_0) = u_i(0)$, $\dot{u}_i(t_0) \geq 0$ and $u_\ell(t_0) \leq u_\ell(0)$, $\ell = 1,\ldots, n$. Apply the differential inequality (2.36) at t_0 ,

$$\dot{u}_i(t_0) < u_i(t_0)[\max_k\{\sum_{\substack{j=1 \\ j\neq k}}^{m} D_i^{jk}\} - \min_j\{a_{i0}^{j}\} + \max_k\{a_{ik}\} \sum_{\ell=1}^{n} u_\ell(t_0)\}$$

or

$$\dot{u}_i(t_0) < u_i(0)[-\varepsilon] < 0$$

which contradicts $\dot{u}_i(t_0) \geq 0$. Hence $u_\ell(t) \leq u_\ell(0)$ for $\ell = 1,\ldots, n$ and $t \geq 0$. Inequality (2.37) holds, from which the desired result follows. /

Similar results like those in Theorems 2.32 and 2.35 are valid for system (2.30). We state the theorems but omit their proofs.

<u>THEOREM 2.38</u>. Let $u(t) = [u_i^j(t)]$ denote a solution to (2.30) with maximal interval of existence $[0, T_u)$ such that

$$\min_k\{\sum_{\substack{j=1\\ j\neq k}}^{m} D_2^{jk}\} - \max_j\{a_{20} + \sum_{\substack{k=1\\ k\neq j}}^{m} D_2^{jk}\,\alpha_2^{jk}\} \geq 0 \quad ,$$

then $\liminf_{t\to T_u} u_2^j(t) > 0$ for $j = 1,\ldots, m$.

<u>THEOREM 2.39</u>. Let $u(t) = [u_i^j(t)]$ denote a solution to (2.30) such that the initial conditions are sufficiently small,

$$\max_k\{\sum_{\substack{j=1\\ j\neq k}}^{m} D_1^{jk}\} - \min_j\{\sum_{\substack{k=1\\ k\neq j}}^{m} D_1^{jk}\,\alpha_1^{jk}\} + a_{10} < 0 \ ,$$

and

$$\max_k\{\sum_{\substack{j=1\\ j\neq k}}^{m} D_2^{jk}\} - \min_j\{a_{20} + \sum_{\substack{k=1\\ k\neq j}}^{m} D_2^{jk}\,\alpha_2^{jk}\} < 0 \ ,$$

then $\lim_{t\to\infty} u(t) = 0$.

Solutions to (2.29) can be unbounded, just as in the mutualistic model, provided the initial positions are sufficiently large and the maximal interval of existence is $[0, \infty)$.

<u>THEOREM 2.40</u>. If initial positions of solutions, $u(t)$, to (2.29) are sufficiently large, in particular,

$$u_q^j(0) > \frac{a_{p0} + \sum_{\substack{k=1 \\ k\neq j}}^{m} D_p^{jk}\,\alpha_p^{jk}}{a_{pq}} = \frac{a_{p0}^j}{a_{pq}}$$

$$u_p^j(0) > \frac{a_{q0} + \sum_{\substack{k=1 \\ k\neq j}}^{m} D_q^{jk}\,\alpha_q^{jk}}{a_{qp}} = \frac{a_{q0}^j}{a_{qp}}$$

for some p and q in the set $\{1, 2,\ldots, n\}$ and some j , and the solution, $w(t)$, to the system

$$\begin{aligned} &\dot{w}_p = w_p[-a_{p0}^j + a_{pq}\, w_q] , \\ (2.41)\qquad &\dot{w}_q = w_q[-a_{q0}^j + a_{qp}\, w_p] , \\ &w_p(0) = u_p^j(0) , \quad w_q(0) = u_q^j(0) \end{aligned}$$

exists on $[0, T_w)$, then if $T_u = T_w$,

$$\lim_{t\to T_u} u_i^j(t) = \infty$$

for $i = q, p$.

In particular, for all solutions, $u(t)$, such that $T_u = T_w = \infty$,

$$\limsup_{t\to\infty} u_i^k(t) = \infty$$

for $i = 1,\ldots, n$ and $k = 1,\ldots, m$.

<u>PROOF</u>. Consider the differential ineoualities

$$\dot{u}_p^j > u_p^j[-a_{p0}^j + a_{pq}\, u_q^j]$$

$$\dot{u}_q^j > u_q^j[-a_{q0}^j + a_{qp}\, u_p^j]$$

obtained from (2.29). The comparison equations in the variables (w_p, w_q) represent the obligate mutualistic system (2.41). If

$$w_p(0) > \frac{a_{q0}^j}{a_{qp}} \quad \text{and} \quad w_q(0) > \frac{a_{p0}^j}{a_{pq}} \quad ,$$

then it follows that $\lim_{t\to T_w} w(t) = \infty$. This in turn, by Corollary 4 to the Comparison Principle in Appendix B, implies

$$(2.42) \qquad \lim_{t\to T_u} u_p^j(t) = \infty \quad \text{and} \quad \lim_{t\to T_u} u_q^j(t) = \infty \ .$$

The first part of the theorem holds.

Now assume $T_u = T_w = \infty$ and consider the other species in patch j , u_i^j for $i \neq p$ and $i \neq q$. The differential equation for u_i^j yields

$$\dot{u}_i^j > u_i^j[-a_{i0}^j + a_{ip}\, u_p^j] \ .$$

Choose $T \geq 0$ such that $t \geq T$ implies $u_p^j(t) > \dfrac{2\, a_{i0}^j}{a_{ip}}$, which is possible because of (2.42). For $t \geq T$, $\dot{u}_i^j > a_{i0}^j\, u_i^j$ which implies

$$\lim_{t\to\infty} u_i^j(t) = \infty$$

for $i = 1,\ldots, n$.

Finally consider the species in patch ℓ, u_i^ℓ , where $\ell \neq j$. The differential equation for u_i^ℓ yields

$$\dot{u}_i^\ell > -a_{i0}^\ell\, u_i^\ell + D_i^{\ell j}\, u_i^j \ .$$

Suppose $\limsup_{t\to\infty} u_i^\ell(t) < K < \infty$, then there exists a T_1 such that $t \geq T_1$ implies $u_i^\ell(t) \leq K$. Choose $T_2 \geq T_1$ such that for $t \geq T_2$, $u_i^j(t) > \dfrac{2\, K\, a_{i0}^\ell}{D_i^{\ell j}}$. For $t \geq T_2$, $\dot{u}_i^\ell(t) > K\, a_{i0}^\ell$ and therefore $\lim_{t\to\infty} u_i^\ell(t) = \infty$. This is a contradiction to the boundedness assumption. The desired conclusion follows. /

Consideration of the maximal interval $[0, T_w)$ of system (2.41) is necessary since it is used as the comparison system. It is possible for system (2.41) to have a finite maximal interval, $T_w < \infty$. Therefore to prove all system components were unbounded we needed the additional assumption $T_u = \infty = T_w$.

Perhaps one of the most surprising results of the random diffusion models is that random diffusion can cause extinction or persistence in systems where in the absence of random diffusion extinction or persistence is not possible. Random diffusion can drive a competitive and predator-prey system to extinction and cause an obligate mutualistic system to persist.

3. Biased Diffusion

In this section, models corresponding to biased diffusion are analyzed. Species migration rates depend upon the population size. The discrete version of the biased diffusion model for a competitive system is

$$(3.1) \qquad \dot{u}_i^j = u_i^j[a_{i0} - \sum_{k=1}^{n} a_{ik} u_k^j] + \sum_{\substack{k=1 \\ k\neq j}}^{m} D_i^{jk} u_i^j[u_i^k - \alpha_i^{jk} u_i^j]$$

for $i = 1,\ldots, n$ and $j = 1,\ldots, m$, where the parameters a_{ik}, D_i^{jk}, and α_i^{jk} are positive.

Model (3.1) differs from the random diffusion model (2.1) in that D_i^{jk} in equations (2.1) is replaced by $D_i^{jk} u_i^j$. The diffusion rate for species u_i^j is a linear function of the population size.

Initial value problems for (3.1) have unique positive solutions.

<u>PROPOSITION 3.2</u>. Given any $u_0 \in \mathbb{R}_+^{n+m}$, there exists a unique solution, $u(t) = [u_i^j(t)]$, to (3.1) such that $u(0) = u_0$ and $u(t) \in \mathbb{R}_+^{n+m}$ for $t \in [0, T_u)$, where $[0, T_u)$ is the maximal interval of existence.

PROOF. The proof follows in a similar manner to the proofs of Propositions 2.3 and 2.4. /

Unlike the competitive random diffusion model, complete extinction cannot occur for the biased diffusion model. This is probably due to the fact that when the population size becomes small, diffusion rates decrease and fewer species leave the patches. The fact that at least one species survives in each patch is the content of the next result.

PROPOSITION 3.3. Let $u(t) = [u_i^j(t)]$ denote a solution to (3.1). For each $j \in \{1,\ldots, m\}$, there exists an $i \in \{1,\ldots, n\}$ such that $\limsup_{t\to T_u} u_i^j(t) > 0$.

PROOF. The proof follows directly from the equations

$$(3.4) \qquad \dot{u}_i^j = u_i^j[a_{i0} - a_{ii}^j u_i^j - \sum_{\substack{k=1\\k\neq i}}^{n} a_{ik} u_k^j + \sum_{\substack{k=1\\k\neq j}}^{m} D_i^{jk} u_i^k]$$

for $i = 1,\ldots, n$ and $j = 1,\ldots, m$, where $a_{ii}^j = a_{ii} + \sum_{\substack{k=1\\k\neq j}}^{m} D_i^{jk} \alpha_i^{jk}$. /

Under certain conditions solutions of (3.1) are bounded.

THEOREM 3.5. If

$$\min_j\{a_{ii}^j\} > (m - 1) \max_{j\neq k}\{D_i^{jk}\} ,$$

for $i = 1,\ldots, n$, then every initial value solution to (3.1) is bounded.

PROOF. Define $u_i = \sum_{j=1}^{m} u_i^j$, $A_i = \min_j\{a_{ii}^j\}$, and $D_i = \max_{j\neq k}\{D_i^{jk}\}$. Suppose there exists an i such that $\limsup_{t\to T_u} u_i(t) = \infty$. Then there

exists a sequence of points $\{t_\ell\}_{\ell=1}^{\infty}$, monotonically increasing, such that $t_\ell \to T_u$, $\lim_{\ell\to\infty} u_i(t_\ell) = \infty$, and $\dot{u}_i(t_\ell) \geq 0$. By passing to successive subsequences, there exists a subsequence, which after relabeling we call $\{t_\ell\}$ again, and a nonempty subset $J \subset \{1, 2,\ldots, m\}$ such that

$$\lim_{\ell\to\infty} u_i^j(t_\ell) = \infty , \quad j \in J \quad \text{and}$$

(3.6)

$$\limsup_{\ell\to\infty} u_i^{j'}(t_\ell) < M < \infty , \quad j' \notin J .$$

Employing equations (3.4) the inequality

$$\dot{u}_i < a_{i0}\, u_i - A_i \sum_{j=1}^{m} (u_i^j)^2 + D_i \sum_{j=1}^{m} u_i^j \sum_{\substack{k=1\\k\neq j}}^{m} u_i^k , \tag{3.7}$$

can be obtained.

We consider two cases. For the first case we assume J contains only one element and for the second case we assume J contains more than one element.

Assume J contains one element, $J = \{j\}$. Choose t_{s_1} such that $t_\ell \geq t_{s_1}$ implies $u_i^{j'}(t_\ell) \leq M$, $j' \notin J$, which is possible because of equations (3.6). For $t_\ell \geq t_{s_1}$ evaluate the inequality (3.7) at t_ℓ (where the arguments are deleted for simplicity of notation),

$$\dot{u}_i < a_{i0}(m - 1)M + a_{i0}\, u_i^j - A_i(u_i^j)^2$$
$$+ 2\, D_i(m - 1)\, M\, u_i^j + D_i(m - 1)(m - 2)\, M^2$$

or equivalently,

$$\dot{u}_i < S_i + u_i^j[R_i - A_i\, u_i^j] ,$$

where $S_i = a_{i0}(m - 1)M + D_i(m - 1)(m - 2)\, M^2$ and $R_i = a_{i0} + 2D_i(m - 1)M$. Choose $t_{s_2} \geq t_{s_1}$ such that for $t_\ell \geq t_{s_2}$,

$$u_i^j(t_\ell) > \max\{\frac{R_i + 1}{A_i} , 2S_i\} .$$

For $t_\ell \geq t_{s_2}$

$$\dot{u}_i(t_\ell) < S_i - u_i^j(t_\ell) < -S_i < 0 ,$$

a contradiction to the choice of the sequence $\{t_\ell\}$. Hence for $J = \{j\}$, solutions are bounded.

Assume J contains c elements, $c > 1$. Apply the Cauchy-Schwarz inequality for sums (Apostol, 1975), (3.8), to inequality (3.7). Since

$$(3.8) \qquad (m - 1) \sum_{j=1}^{m} (u_i^j)^2 \geq \sum_{j=1}^{m} u_i^j \sum_{\substack{k=1 \\ k \neq j}}^{m} u_i^k .$$

we obtain the following inequality

$$\dot{u}_i < a_{i0}\, u_i - [\frac{A_i}{m-1} - D_i] \sum_{j=1}^{m} u_i^j \sum_{\substack{k=1 \\ k\neq j}}^{m} u_i^k$$

or equivalently,

$$(3.9) \qquad \dot{u}_i < a_{i0}[\Sigma\, u_i^{j'} + \Sigma\, u_i^j]$$

$$- \bar{D}_i[\Sigma\, u_i^j(\Sigma\, u_i^{\bar{j}} + \Sigma\, u_i^{j'}) + \Sigma\, u_i^{j'}(\Sigma\, u_i^j + \Sigma\, u_i^{\bar{j}'})] ,$$

where $\bar{D}_i = \frac{A_i}{m-1} - D_i > 0$ and the superscripts of u_i , j, j', $\bar{j}$, $\bar{j}'$ mean the summations are taken over $j \in J$, $j' \notin J$, $\bar{j} \in J$ and $\bar{j} \neq j$, $\bar{j}' \notin J$ and $\bar{j}' \neq j'$, respectively.

Choose t_{s_1} such that $t_\ell \geq t_{s_1}$ implies $u_i^{j'}(t_\ell) \leq M$ for $j' \notin J$. Thus

$$\Sigma\, u_i^{j'}(t_\ell) \leq (m - c)\, M .$$

Inequality (3.9) can be replaced by

$$(3.10) \qquad \dot{u}_i(t_\ell) < a_{i0}[(m - c)M + \Sigma\, u_i^j] - \bar{D}_i[\Sigma\, u_i^j\ \Sigma\, u_i^{\bar{j}}]$$

for $t_\ell \geq t_{s_1}$. Choose $t_{s_2} \geq t_{s_1}$ such that $t_\ell \geq t_{s_2}$ implies

$$u_i^j(t_\ell) > \max\{\frac{2\, a_{i0}}{\bar{D}_i} ,\ (m - c)M\} .$$

For $t_\ell \geq t_{s_2}$, inequality (3.10) implies

$$\dot{u}_i(t_\ell) < a_{i0}(m - c)\, M + \Sigma\, u_i^j[a_{i0} - 2\, a_{i0}] \leq 0 \ .$$

The inequality $\dot{u}_i(t_\ell) < 0$ contradicts the choice of the original sequence $\{t_\ell\}$. The conclusion of the theorem follows. /

If the condition in Theorem 3.5 holds, solutions can be continued to the right - i.e., the maximal interval of existence for a solution, $u(t)$, is $[0, \infty)$.

<u>COROLLARY 3.11</u>. If $\min_j\{a_{ii}^j\} > (m - 1) \max_{j \neq k}\{D_i^{jk}\}$, $i = 1, \ldots, n$, then initial value solutions to (3.1) exist on $[0, \infty)$.

Biased diffusion can be viewed as an increase in the density dependent term a_{ii} to a_{ii}^j in each patch. But at the same time it also adds the terms $u_i^j \sum_{\substack{k=1 \\ k \neq j}}^{m} D_i^{jk}\, u_i^k$ which is an expression of mutualistic behavior. Density dependence puts a limit on population growth, but mutualism enhances growth. These two behaviors are in opposition and thus a divergence is obtained. When density dependence dominates, solutions are bounded (Theorem 3.5) and when mutualism dominates, solutions are unbounded (Theorem 3.16).

We first restrict ourselves to the case of two species in two patches, then to one species in m patches. In the next two theorems, sufficient conditions are given for component persistence.

<u>THEOREM 3.12</u>. Assume $\min\{a_{ii}^1, a_{ii}^2\} > \max\{D_i^{12}, D_i^{21}\}$, $i = 1, 2$ and $n = 2 = m$ in (3.1).

(i) If $a_{12}a_{21} \leq D_1^{12}\, D_2^{21}$, then every solution, $u(t) = [u_i^j(t)]$, to (3.1) satisfies $\limsup_{t \to \infty} u_i^i(t) > 0$ for some i .

(ii) If $a_{12}a_{21} \leq D_1^{21} D_2^{12}$, then every solution $u(t) = [u_i^j(t)]$, to (3.1) satisfies $\limsup_{t\to\infty} u_1^2(t) > 0$ or $\limsup_{t\to\infty} u_2^1(t) > 0$.

PROOF. The first assumption implies by Corollary 3.11 that initial value solutions exist on $[0, \infty)$.

For part (i) consider the "persistence function"

$$V(t) = [u_1^1(t)]^{\beta_1^1} [u_2^2(t)]^{\beta_2^2} ,$$

where $\beta_i^i > 0$, $i = 1, 2$ and $\frac{a_{21}}{D_1^{12}} \leq \frac{\beta_1^1}{\beta_2^2} \leq \frac{D_2^{21}}{a_{12}}$.

Suppose, for purpose of contradiction, that $\lim_{t\to\infty} u_i^i(t) = 0$, $i = 1, 2$. Then $\lim_{t\to\infty} V(t) = 0$. The derivative of V along trajectories of (3.1) yields

$$\dot{V}(t) = V(t)[\beta_1^1 \frac{\dot{u}_1^1}{u_1^1} + \beta_2^2 \frac{\dot{u}_2^2}{u_2^2}]$$

$$= V(t)[\gamma - \beta_1^1 a_{11}^1 u_1^1(t) - \beta_2^2 a_{22}^2 u_2^2(t)$$

$$+ (\beta_1^1 D_1^{12} - \beta_2^2 a_{21})u_1^2(t) + (\beta_2^2 D_2^{21} - \beta_1^1 a_{12}) u_2^1(t))]$$

where $\gamma = a_{10} \beta_1^1 + a_{20} \beta_2^2$, and $a_{ii}^i = a_{ii} + D_i^{ik} \alpha_i^{ik}$. Choose T such that $t \geq T$ implies

$$u_1^1(t) < \frac{\gamma}{4 \beta_1^1 a_{11}^1} \text{ and } u_2^2(t) < \frac{\gamma}{4 \beta_2^2 a_{22}^2} .$$

For $t \geq T$, $\dot{V}(t) > V(t)[\frac{\gamma}{2}]$, since the coefficients of u_1^2 and u_2^1 are positive due to the choice of the ratio $\frac{\beta_1^1}{\beta_2^2}$. Thus $\lim_{t\to\infty} V(t) = \infty$, which contradicts the original assumption. Hence the conclusion for part (i) follows.

The proof of part (ii) follows similarly if V is replaced by the "persistence function"

$$V(t) = [u_1^2(t)]^{\beta_1^2} [u_2^1(t)]^{\beta_2^1} ,$$

where $\beta_i^j > 0$, $i \neq j$, $i, j = 1, 2$ and $\frac{a_{21}}{D_1^{21}} \leq \frac{\beta_1^2}{\beta_2^1} \leq \frac{D_2^{12}}{a_{12}}$. /

<u>COROLLARY 3.13</u>. Assume $\min\{a_{ii}^1, a_{ii}^2\} > \max\{D_i^{12}, D_i^{21}\}$, $i = 1, 2$ and $n = 2 = m$ in (3.1). Let $u(t) = [u_i^j(t)]$ be any solution of (3.1) satisfying $\lim_{t\to\infty} u_i^j(t) = 0$ for some i and j such that $a_{12}a_{21} \leq \min\{D_1^{12} D_2^{21}, D_1^{21} D_2^{12}\}$, then $\limsup_{t\to\infty} u_k^\ell(t) > 0$ for $k \neq i$ and $\ell = 1, 2$.

<u>PROOF</u>. Proposition 3.3 implies $\limsup_{t\to\infty} u_k^j(t) > 0$, $k \neq i$ and Theorem 3.12 implies $\limsup_{t\to\infty} u_k^\ell(t) > 0$, $k \neq i$, $\ell \neq j$. /

Observe that all of the previous theorems and propositions hold if the parameters are patch dependent.

Next we analyze the case of one species in m patches. This represents a logistic population distributed among m patches. Proposition 3.3 implies the system is persistent since there exists only one species per patch. However it is easy to show that the following system is strongly persistent:

$$(3.14) \qquad \dot{u}^j = u^j[a_{j0} - a_{jj}\, u^j] + \sum_{\substack{k=1 \\ k\neq j}}^{m} D^{jk}\, u^j[u^k - \alpha^{jk}\, u^j] \ ,$$

for $j = 1,\ldots, m$, where the parameters are positive.

<u>THEOREM 3.15</u>. Let $u(t) = [u^j(t)]$ denote a solution of (3.14) with maximal interval $[0, T_u)$. Each component $u^j(t)$ of $u(t)$ satisfies

$$\liminf_{t\to T_u} u^j(t) > 0 \ ,$$

for $j = 1,\ldots, m$.

<u>PROOF</u>. Rearrange system (3.14) as follows:

$$\dot{u}^j = u^j[a_{j0} - \bar{a}_{jj}\, u^j + \sum_{\substack{k=1 \\ k\neq j}}^{m} D^{jk}\, u^k]$$

or

$$\dot{u}^j > u^j[a_{j0} - \bar{a}_{jj}\, u^j] \ ,$$

where $\bar{a}_{jj} = a_{jj} + \sum_{\substack{k=1 \\ k\neq j}}^{m} D^{jk}\, \alpha^{jk}$. The comparison equations are the logistic equations,

$$\dot{w}^j = w^j[a_{j0} - \bar{a}_{jj}\, w^j] \ .$$

Since $\lim_{t\to\infty} w^j(t) = \dfrac{a_{j0}}{\bar{a}_{jj}}$ and $u^j(t) > w^j(t)$ on $[0, T_u)$, the desired result follows. /

Theorem 3.5 shows that solutions are bounded if the density dependent effect induced by diffusion is greater than the mutualistic effect. We show next the reverse conclusion holds if the mutualistic effect dominates - i.e., solutions to (3.14) are unbounded.

THEOREM 3.16. Let $u(t) = [u^j(t)]$ denote a solution of (3.14) with maximal interval of existence $[0, \infty)$. If

$$(3.17) \qquad \bar{a}_{kk}\, \bar{a}_{jj} - D^{jk}\, D^{kj} \leq 0$$

for some k and j, $k \neq j$, then $\limsup_{t\to\infty} u^j(t) = \infty$ for $j = 1,\ldots, m$.

PROOF. The basic idea is to compare the differential equations for u^k and u^j with a system whose solutions are unbounded. The differential equations for u^k and u^j satisfy

$$\dot{u}^k > u^k[a_{k0} - \bar{a}_{kk}\, u^k + D^{kj}\, u^j]$$

$$\dot{u}^j > u^j[a_{j0} - \bar{a}_{jj}\, u^j + D^{jk}\, u^k] .$$

The solution of the comparison differential equations,

$$\dot{w}^k = w^k[a_{k0} - \bar{a}_{kk}\, w^k + D^{kj}\, w^j]$$

$$\dot{w}^j = w^j[a_{j0} - \bar{a}_{jj}\, w^j + D^{jk}\, w^k] ,$$

exists on $[0, \infty)$ and is unbounded in both components, if (3.17) holds. A graph of the phase plane is given in Figure 3a). Corollary

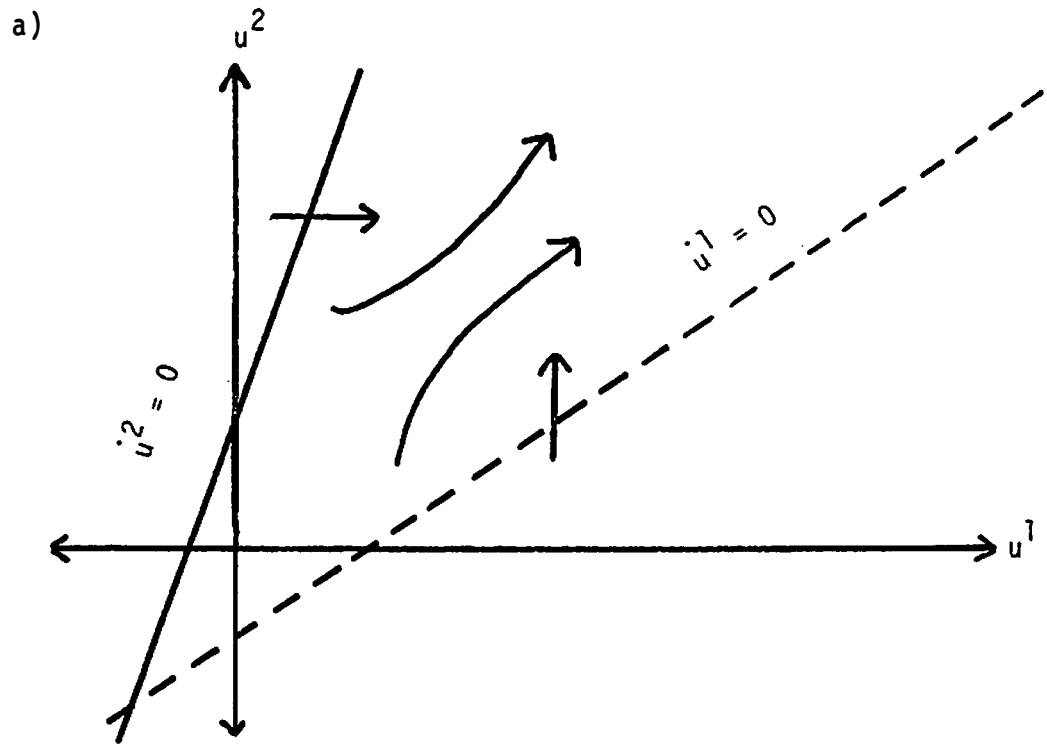

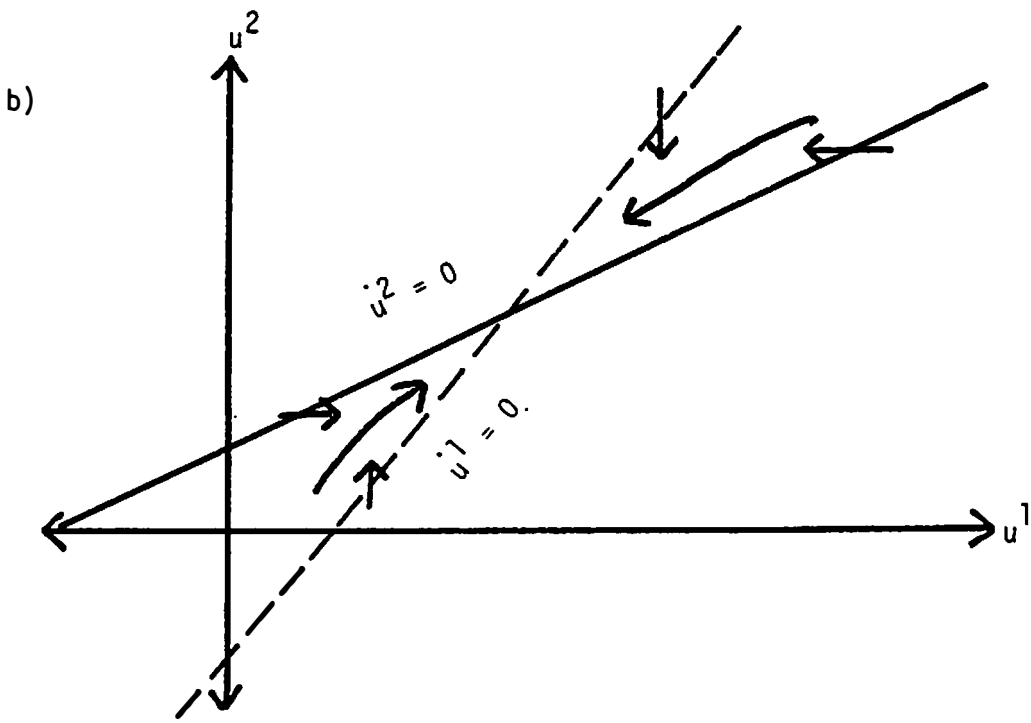

FIGURE 3

a) Solutions to (3.21) are unbounded.

b) Solutions to (3.21) tend to an equilibrium.

4 to the Comparison Principle in Appendix B implies $w^k(t) < u^k(t)$ and $w^j(t) < u^j(t)$ for $t > 0$. Hence

$$\lim_{t\to\infty} u^k(t) = \infty = \lim_{t\to\infty} u^j(t) .$$

Consider the other components $u^i(t)$, where $i \neq k$, $i \neq j$. The inequality

$$(3.18) \qquad \dot{u}^i > u^i[a_{i0} - \bar{a}_{ii}\, u^i + D^{ij}\, u^j]$$

holds. Suppose $\limsup_{t\to\infty} u^i(t) < M < \infty$. Choose T such that $t \geq T$ implies

$$(3.19) \qquad u^i(t) \leq M \quad \text{and} \quad u^j(t) > \frac{\bar{a}_{ii}\, M}{D^{ij}} .$$

For $t \geq T$, inequality (3.18) coupled with (3.19) imply

$$\dot{u}^i(t) > u^i(t)[a_{i0} - \bar{a}_{ii}\, M + \bar{a}_{ii}\, M] = u^i(t)\, a_{i0} .$$

Thus $\lim_{t\to\infty} u^i(t) = \infty$, which contradicts the boundedness assumption. The conclusion of the theorem follows. /

The inequality (3.17) is satisfied only if $\alpha^{jk}\, \alpha^{kj} < 1$. An interpretation of this inequality is that the species are more inclined to remain in their respective patches than leave. In addition species

are moving into the patches from the surrounding species pool, thereby causing an overabundance of the species in the patch.

For the particular case $m = 2$ in system (3.14), the results of Theorems 3.15 and 3.16 are sharp. One parameter determines asymptotic stability or unbounded growth.

PROPOSITION 3.20. Let $u(t) = [u^j(t)]_{j=1}^2$ denote a solution of (3.14). If

(i) $\bar{a}_{11}\,\bar{a}_{22} - D^{12}\,D^{21} \leq 0$, then $\lim_{t\to\infty} u^j(t) = \infty$, $j = 1, 2$,

or if

(ii) $\bar{a}_{11}\,\bar{a}_{22} - D^{12}\,D^{21} > 0$, then

$$\lim_{t\to\infty} u^1(t) = \frac{a_{10}\,\bar{a}_{22} + a_{20}\,D^{12}}{\bar{a}_{11}\,\bar{a}_{22} - D^{12}\,D^{21}} \quad \text{and}$$

$$\lim_{t\to\infty} u^2(t) = \frac{a_{20}\,\bar{a}_{11} + a_{10}\,D^{21}}{\bar{a}_{11}\,\bar{a}_{22} - D^{12}\,D^{21}} \quad .$$

PROOF. The proof follows directly from the differential equations,

$$\dot{u}^1 = u^1[a_{10} - \bar{a}_{11}\,u^1 + D^{12}\,u^2] ,$$

(3.21)

$$\dot{u}^2 = u^2[a_{20} - \bar{a}_{22}\,u^2 + D^{21}\,u^1]$$

and a phase plane analysis. The isoclines of (3.21) under the conditions stated in parts (i) and (ii) are graphed in Figure 3a) and 3b), respectively. The conclusion of the theorem follows. /

Biased diffusion caused an asymptotically stable population, modelled by the logistic equation to display unbounded growth.

The discrete version of the biased diffusion model for a predator-prey system is given by the following equations,

$$\dot{u}_1^j = u_1^j[a_{10} - a_{12}\, u_2^j] + \sum_{\substack{k=1\\k\neq j}}^{m} D_1^{jk}\, u_1^j[u_1^k - \alpha_1^{jk}\, u_1^j]$$

(3.22)

$$\dot{u}_2^j = u_2^j[-a_{20} + a_{21}\, u_1^j] + \sum_{\substack{k=1\\k\neq j}}^{m} D_2^{jk}\, u_2^j[u_2^k - \alpha_2^{jk}\, u_2^j]$$

for $j = 1,\ldots, m$, where the parameters are positive.

Initial value problems for (3.22) have unique positive solutions.

<u>PROPOSITION 3.23</u>. Given any $u_0 \in \mathbb{R}_+^{2+m}$ there exists a unique solution, $u(t) = [u_i^j(t)]$, to (3.22) such that $u(0) = u_0$ and $u(t) \in \mathbb{R}_+^{2+m}$ for $t \in [0, T_u)$, where $[0, T_u)$ is the maximal interval of existence.

<u>PROOF</u>. The proof follows in a similar manner to the proofs of Propositions 2.3 and 2.4. /

As was true for competition with biased diffusion is also true for (3.22); at least one species survives in each patch.

<u>PROPOSITION 3.24</u>. Let $u(t) = [u_i^j(t)]$ denote a solution of (3.22). For each $j \in \{1, 2,\ldots, m\}$ there exists an $i \in \{1, 2\}$ such that $\limsup_{t\to T_u} u_i^j(t) > 0$.

PROOF. First, system (3.22) is rearranged as follows:

$$\dot{u}_1^j = u_1^j[a_{10} - a_{12}\, u_2^j - a_{11}^j\, u_1^j + \sum_{\substack{k=1\\k\neq j}}^{m} D_1^{jk}\, u_1^k]$$

(3.25)

$$\dot{u}_2^j = u_2^j[-a_{20} + a_{21}\, u_1^j - a_{22}^j\, u_2^j + \sum_{\substack{k=1\\k\neq j}}^{m} D_2^{jk}\, u_2^k]$$

for $j = 1,\ldots, m$, where $a_{11}^j = \sum_{\substack{k=1\\k\neq j}}^{m} D_1^{jk}\, \alpha_1^{jk}$ and $a_{22}^j = \sum_{\substack{k=1\\k\neq j}}^{m} D_2^{jk}\, \alpha_2^{jk}$

Assume extinction occurs, $\lim_{t\to T_u} u_i^j(t) = 0$, $i = 1, 2$, then $T \in (0, T_u)$ can be chosen so that $t \in [T, T_u)$ implies

$$u_1^j(t) < \frac{a_{10}}{4\, a_{11}^j} \quad \text{and} \quad u_2^j(t) < \frac{a_{10}}{4\, a_{12}} \ .$$

For $t \in [T, T_u)$, equations (3.25) imply

$$\dot{u}_1^j(t) > \frac{a_{10}}{2}\, u_1^j(t) \ .$$

This implies $u_1^j(t) > u_1^j(T)\, e^{\frac{a_{10}}{2}(t - T)}$ for $t \in (T, T_u)$, which contradicts $\lim_{t\to T_u} u_1^j(t) = 0$. The desired conclusion follows. /

Density dependence can be included either in the prey or predator equations and the proposition is still valid. Theorem 3.5

can be applied to the prey equations. If $\min_j\{a_{11}^j\} > (m-1)\max_{j\neq k}\{D_1^{jk}\}$, then every solution, $u(t)$, has components $u_1^j(t)$ which are bounded.

Proposition 3.24 shows that a species must survive in each patch. We show next that under certain conditions the predator cannot be the sole survivor in every patch.

<u>THEOREM 3.26</u>. Let $u(t) = [u_i^j(t)]$ denote a solution of (3.22) such that

$$(3.27) \qquad \min_j\{a_{22}^j\} \geq (m-1)\max_{j\neq k}\{D_2^{jk}\},$$

then $\limsup_{t\to T_u} u_1^j(t) > 0$ for some j .

<u>PROOF</u>. Define $u_i = \sum_{j=1}^{m} u_i^j$, $i = 1, 2$, $A_2 = \min_j\{a_{22}^j\}$, and $D_2 = \max_{j\neq k}\{D_2^{jk}\}$.

Suppose $\lim_{t\to T_u} u_1(t) = 0$. We consider two cases, the first case is $T_u < \infty$ and the second $T_u = \infty$.

Assume $T_u < \infty$. Then there exists a j such that $\limsup_{t\to T_u} u_2^j(t) = \infty$, since otherwise the solution can be continued to the right. Thus $\limsup_{t\to T_u} u_2(t) = \infty$. There exists a T such that $t \in [T, T_u)$, implies

$$u_1^j(t) < \frac{a_{20}}{2\,a_{21}}$$

for $j = 1,\ldots, m$. For $t \in [T, T_u)$, the differential equation for u_2^j yields

$$\dot{u}_2^j < u_2^j[-\frac{a_{20}}{2} - a_{22}^j u_2^j + \sum_{\substack{k=1 \\ k\neq j}}^{m} D_2^{jk} u_2^k]$$

for $j = 1,\ldots, m$. Hence

$$\dot{u}_2 < \frac{-a_{20}}{2} u_2 - A_2 \sum_{j=1}^{m} (u_2^j)^2 + D_2 \sum_{j=1}^{m} \sum_{\substack{k=1 \\ k\neq j}}^{m} u_2^j u_2^k \ .$$

Next apply Cauchy-Schwarz inequality for sums (Apostol, 1975) to obtain

$$\dot{u}_2 < \frac{-a_{20}}{2} u_2 - [\frac{A_2}{(m-1)} - D_2] \sum_{j=1}^{m} \sum_{\substack{k=1 \\ k\neq j}}^{m} u_2^j u_2^k \ .$$

Inequality (3.27) implies $\frac{A_2}{(m-1)} - D_2 \geq 0$, thus for $t \in [T, T_u)$ we have

$$(3.28) \qquad \dot{u}_2(t) < \frac{-a_{20}}{2} u_2(t) \ .$$

This implies $u_2(t) < u_2(T)\, e^{-\frac{a_{20}}{2}(t-T)}$ for $t \in (T, T_u)$ and u_2 is bounded, which is a contradiction. For $T_u < \infty$ we have reached a contradiction, thus the conclusion is valid in this case.

Assume $T_u = \infty$. By the same argument as above we obtain the inequality (3.28) for $t \geq T$. Inequality (3.28) implies

$\lim_{t\to\infty} u_2(t) = 0$ which contradicts Proposition 3.24. In either case, $T_u < \infty$ or $T_u = \infty$, the desired conclusion is reached. /

If a predator satiation effect is included, Proposition 3.24 and Theorem 3.26 still hold. Consider the predator-prey model introduced in section 2,

$$\dot{u}_1^j = u_1^j[a_{10} - a_{12}\, g^j(u_1^j)u_2^j] + \sum_{\substack{k=1\\k\neq j}}^{m} D_1^{jk}\, u_1^j[u_1^k - \alpha_1^{jk}\, u_1^j]$$

(3.29)

$$\dot{u}_2^j = u_2^j[-a_{20} + a_{21}\, g^j(u_1^j)u_1^j] + \sum_{\substack{k=1\\k\neq j}}^{m} D_2^{jk}\, u_2^j[u_2^k - \alpha_2^{jk}\, u_2^j]$$

for $j = 1,\ldots, m$, where $g^j \in C^1(\mathbb{R}_+)$ and $0 < g^j(x) < K < \infty$ for $x \in \mathbb{R}_+$.

<u>PROPOSITION 3.30</u>. (i) Let $u(t) = [u_i^j(t)]$ denote a solution of (3.29). For each $j \in \{1, 2,\ldots, m\}$ there exists an $i \in \{1, 2\}$ such that $\limsup_{t\to T_u} u_i^j(t) > 0$.

(ii) Let $u(t) = [u_i^j(t)]$ denote a solution of (3.29) such that

$$\min_j\{a_{22}^j\} \geq (m - 1) \max_{j\neq k}\{D_2^{jk}\},$$

then $\limsup_{t\to T_u} u_1^j(t) > 0$ for some j.

PROOF. The proof of part (i) follows easily from the inequality

$$\dot{u}_1^j > u_1^j[a_{10} - a_{12} K u_2^j - \sum_{\substack{k=1 \\ k\neq j}}^{m} D_1^{jk} \alpha_1^{jk} u_1^j + \sum_{\substack{k=1 \\ k\neq j}}^{m} D_1^{jk} u_1^k] .$$

The proof of part (ii) follows from the inequality

$$\dot{u}_2^j < u_2^j[-a_{20} + a_{21} K u_1^j - \sum_{\substack{k=1 \\ k\neq j}}^{m} D_2^{jk} \alpha_2^{jk} u_2^j + \sum_{\substack{k=1 \\ k\neq j}}^{m} D_2^{jk} u_2^k] . \quad /$$

Consider the obligate mutualistic system with biased diffusion,

$$(3.31) \qquad \dot{u}_i^j = u_i^j[-a_{i0} + \sum_{\substack{k=1 \\ k\neq i}}^{n} a_{ik} u_k^j] + \sum_{\substack{k=1 \\ k\neq j}}^{m} D_i^{jk} u_i^j[u_i^k - \alpha_i^{jk} u_i^j]$$

for $i = 1,\ldots, n$ and $j = 1,\ldots, m$, where all parameters are positive. Initial value problems of (3.31) have unique positive solutions.

PROPOSITION 3.32. Given any $u_0 \in IR_+^{n+m}$ there exists a unique solution, $u(t) = [u_i^j(t)]$, to (3.31) such that $u(0) = u_0$ and $u(t) \in IR_+^{n+m}$ for $t \in [0, T_u)$, where $[0, T_u)$ is the maximal interval.

Model (3.31) exhibits the same extinction behavior as does the model without diffusion.

THEOREM 3.33. Let $u(t) = [u_i^j(t)]$ denote a solution of (3.31) where the initial conditions are sufficiently small, then $\lim_{t\to\infty} u(t) = 0$.

PROOF. The differential equation for u_i^j satisfies

$$(3.34) \qquad \dot{u}_i^j < u_i^j[-a_{i0} + \sum_{\substack{k=1 \\ k\neq i}}^{n} a_{ik}\, u_k^j + \sum_{\substack{k=1 \\ k\neq j}}^{m} D_i^{jk}\, u_i^k] .$$

If the initial conditions are sufficiently small so that

$$[-a_{i0} + \sum_{\substack{k=1 \\ k\neq i}}^{n} a_{ik}\, u_k^j(0) + \sum_{\substack{k=1 \\ k\neq j}}^{m} D_i^{jk}\, u_i^k(0)] \leq -\varepsilon < 0$$

for $i = 1,\ldots, n$ and $j = 1,\ldots, m$, where $\varepsilon > 0$, then we show that

$$(3.35) \qquad \dot{u}_i^j < -\varepsilon\, u_i^j$$

for $i = 1,\ldots, n$ and $j = 1,\ldots, m$.

If $u_i^j(t) \leq u_i^j(0)$ for all i and j and all $t \geq 0$, we are done. Suppose this is not true; there exists a $\bar{t}$ such that $u_i^j(\bar{t}) > u_i^j(0)$ for some i and j . Define

$$t_0 = \text{l.u.b.}\{t \mid u_i^j(t) \leq u_i^j(0),\ i = 1,\ldots, n,\ j = 1,\ldots, m,\ t \geq 0\}.$$

There exists i and j such that $u_i^j(t_0) = u_i^j(0)$, $\dot{u}_i^j(t_0) \geq 0$, and $u_k^\ell(t_0) \leq u_k^\ell(t_0)$ for $k = 1,\ldots, n$ and $\ell = 1,\ldots, m$. Evaluate the differential inequality (3.34) at t_0 ,

$$\dot{u}_i^j(t_0) < u_i^j(t_0)[-a_{i0} + \sum_{\substack{k=1 \\ k\neq i}}^{n} a_{ik}\, u_k^j(t_0) + \sum_{\substack{k=1 \\ k\neq j}}^{m} D_i^{jk}\, u_i^k(t_0)]$$

or

$$\dot{u}_i^j(t_0) < u_i^j(0)[-\varepsilon] < 0$$

since $u_k^\ell(t_0) \leq u_k^\ell(0)$ for all k and ℓ. This contradicts $\dot{u}_i^j(t_0) \geq 0$. Hence $u_k^\ell(t) \leq u_k^\ell(0)$ for $t \geq 0$. Thus the inequality (3.35) holds for $t \geq 0$ and for all i and j. The desired conclusion is obtained. /

Theorem 3.33 implies system (3.31) is of extinction type. No persistence criteria exist which imply persistence.

We have shown that the biased diffusion models of competition and predation represent more persistent systems than the same models with random diffusion. In competition and predation at least one species survives. However biased diffusion did not cause the mutualistic system to persist as random diffusion did. We also showed that biased diffusion can lead to solutions which exhibit unbounded growth in the logistic model, a behavior which does not occur in the model without diffusion.

4. Directed Diffusion

Two discrete versions of the directed diffusion model are analyzed in this section. The first version can easily be extended to an arbitrary number of m patches, whereas the second version cannot. Therefore the second version is discussed only for the case $m = 2$ in the logistic model.

Directed diffusion is movement away from areas of high population densities to areas of low population densities. The first

version of the directed diffusion model for a competitive system is

$$(4.1) \qquad \dot{u}_i^j = u_i^j[a_{i0} - \sum_{k=1}^{n} a_{ik}\, u_k^j] + \sum_{\substack{k=1\\k\neq j}}^{m} D_i^{jk}[(u_i^k)^2 - \alpha_i^{jk}(u_i^j)^2]$$

for $i = 1,\ldots, n$ and $j = 1,\ldots, m$, where all parameters are positive.

Initial value problems of (4.1) have unique positive solutions.

<u>PROPOSITION 4.2</u>. Given any $u_0 \in \mathbb{R}_+^{n+m}$ there exists a unique solution, $u(t) = [u_i^j(t)]$, such that $u(0) = u_0$ and $u(t) \in \mathbb{R}_+^{n+m}$ for $t \in [0, T_u)$.

Complete extinction cannot occur in system (4.1). The next Proposition proves that at least one species persists in each patch.

<u>PROPOSITION 4.3</u>. Let $u(t) = [u_i^j(t)]$ denote a solution of (4.1). For each $j \in \{1,\ldots, m\}$ there exists an $i \in \{1,\ldots, n\}$ such that

$$\limsup_{t\to T_u} u_i^j(t) > 0 .$$

<u>PROOF</u>. First, system (4.1) is rearranged as follows:

$$(4.4) \qquad \dot{u}_i^j = u_i^j[a_{i0} - a_{ii}^j\, u_i^j - \sum_{\substack{k=1\\k\neq i}}^{n} a_{ik}\, u_k^j] + \sum_{\substack{k=1\\k\neq j}}^{m} D_i^{jk}(u_i^k)^2 ,$$

where $a_{ii}^j = a_{ii} + \sum_{\substack{k=1\\k\neq j}}^{m} D_i^{jk}\, \alpha_i^{jk}$. Assume that $\lim_{t\to T_u} u_i^j(t) = 0$ for $i = 1,\ldots, n$. From (4.4) we obtain the differential inequality,

$$\dot{u}_i^j > u_i^j[a_{i0} - a_{ii}^j\, u_i^j - \sum_{\substack{k=1\\k\neq i}}^{n} a_{ik}\, u_k^j] .$$

There exists a T such that $t \in [T, T_u)$ implies

$$\dot{u}_i^j(t) > u_i^j[\frac{a_{i0}}{2}] ,$$

since $\lim_{t\to T_u} u_i^j(t) = 0$ and $\lim_{t\to T_u} u_k^j(t) = 0$. Thus $u_i^j(t) > u_i^j(T)\, e^{\frac{a_{i0}}{2}(t-T)}$ for $t \in [T, T_u)$, which contradicts $\lim_{t\to T_u} u_i^j(t) = 0$. The conclusion of the theorem holds. /

A result similar to the one for the competitive random diffusion model (2.1), Theorem 2.2, which was due to Hastings (1978), is valid for the directed diffusion model.

<u>THEOREM 4.5</u>. Let $u(t) = [u_i^j(t)]$ denote a solution of (4.1) with $n = 2$ such that

(i) $D_i^{jk} = D_i^{kj}$, $i = 1, 2,\ j \neq k$,

(ii) $\alpha_i^{jk} = 1$, $i = 1, 2,\ j \neq k$,

and

(iii) $\frac{a_{12}}{a_{22}} < \frac{a_{10}}{a_{20}} < \frac{a_{11}}{a_{21}}$,

then the maximal interval is $[0, \infty)$ and $u(t)$ satisfies

$$\lim_{t\to\infty} u_1^j(t) = \frac{a_{10}\, a_{22} - a_{20}\, a_{12}}{a_{11}\, a_{22} - a_{12}\, a_{21}} = u_1^*$$

$$\lim_{t\to\infty} u_2^j(t) = \frac{a_{11}\, a_{20} - a_{10}\, a_{21}}{a_{11}\, a_{22} - a_{12}\, a_{21}} = u_2^*$$

for $j = 1,\ldots, m$.

PROOF. We first show that a solution to system (4.1) satisfying (i) - (iii) is bounded for any finite time and hence the solution can be continued to the right.

Let $u_i = \sum_{j=1}^{m} u_i^j$. The differential equation for u_i is

$$\dot{u}_i = u_i\, a_{i0} - \sum_{j=1}^{m}\sum_{k=1}^{n} a_{ik}\, u_k^j\, u_i^j ,$$

since $\sum_{j=1}^{m}\sum_{\substack{k=1\\k\neq j}}^{m} D_i^{jk}[(u_i^k)^2 - \alpha_i^{jk}(u_i^j)^2] = 0$. However

$$\dot{u}_i < a_{i0}\, u_i - \min_k\{a_{ik}\} \sum_{j=1}^{m} (u_i^j)^2 .$$

By an argument similar to the proof of Theorem 2.5 we can show solutions are bounded. Hence $\limsup_{t\to T} u_i(t) < \infty$ for every $T < \infty$, $i = 1,\ldots, n$, which implies $\limsup_{t\to T} u_i^j(t) < \infty$ for every $T < \infty$, $i = 1,\ldots, n$ and $j = 1,\ldots, m$. The maximal interval of existence for $u(t)$ is $[0, \infty)$.

The function

$$V_j = a_{21}[u_1^j - u_1^* - u_1^* \ln \frac{u_1^j}{u_1^*}] + a_{12}[u_2^j - u_2^* - u_2^* \ln \frac{u_2^j}{u_2^*}]$$

is a Lyapunov function for the homogeneous system (4.1), $D_i^{jk} \equiv 0$ (Goh, 1977). Consider the function

$$\overline{V} = \sum_{j=1}^{m} V_j .$$

We show that $\bar{V}$ is a Lyapunov function for (4.1). Observe that $\bar{V}$ is positive definite; $\bar{V} \geq 0$ and $\bar{V} = 0$ if and only if $u_i^j = u_i^*$ $i = 1,\ldots, n$ and $j = 1,\ldots, m$. The derivative of $\bar{V}$ is

$$\dot{\bar{V}} = \sum_{j=1}^{m} \sum_{i=1}^{2} c_i \frac{\dot{u}_i^j}{u_i^j}[u_i^j - u_i^*] ,$$

where $c_1 = a_{21}$ and $c_2 = a_{12}$. System (4.1) together with (ii) imply

$$(4.6) \qquad \dot{\bar{V}} = \{ \sum_{j=1}^{m} \sum_{i=1}^{2} c_i[a_{i0} - \sum_{k=1}^{n} a_{ik} u_k^j][u_i^j - u_i^*]\}$$

$$+ \{ \sum_{j=1}^{m} \sum_{i=1}^{2} \sum_{\substack{k=1 \\ k\neq j}}^{m} c_i D_i^{jk}[\frac{(u_i^k)^2 - (u_i^j)^2}{u_i^j}] [u_i^j - u_i^*]\}$$

or equivalently,

$$\dot{\bar{V}} = \{I_1\} + \{I_2\} ,$$

where I_1 and I_2 represent the first and second terms in brackets, respectively, on the right side of (4.6). Since V_j is a Lyapunov function for the homogeneous system, $I_1 < 0$. We show next that $I_2 \leq 0$. Assumption (i) implies

$$I_2 = \sum_{i=1}^{2} \sum_{j=1}^{m} \sum_{k=1}^{j-1} c_i D_i^{jk}[(u_i^k)^2 - (u_i^j)^2][\frac{u_i^*}{u_i^k} - \frac{u_i^*}{u_i^j}]$$

or

$$I_2 = -\sum_{i=1}^{2} \sum_{j=1}^{m} \sum_{k=1}^{j-1} c_i D_i^{jk} \frac{u_i^*}{u_i^j u_i^k} [u_i^k - u_i^j]^2 [u_i^k + u_i^j] .$$

Therefore $I_2 \leq 0$ and $\dot{\bar{V}}$ is negative definite; $\dot{\bar{V}} \leq 0$ and $\dot{\bar{V}} = 0$ if and only if $u_i^j = u_i^*$, $i = 1,\ldots, n$ and $j = 1,\ldots, m$. We have proved that $\bar{V}$ is a Lyapunov function for (4.1) under the assumptions (i) - (iii). The homogeneous equilibrium is globally asymptotically stable. The conclusion follows. /

The conditions in Theorem 4.5 imply model (4.1) is a strongly persistent system.

Next we investigate a logistic population in m patches with directed diffusion. The model is

$$(4.7) \qquad \dot{u}^j = u^j[a_{j0} - a_{jj} u^j] + \sum_{\substack{k=1 \\ k\neq j}}^{m} D^{jk}[(u^k)^2 - \alpha^{jk}(u^j)^2]$$

for $j = 1,\ldots, m$, where all parameters are positive. According to Proposition 4.3, system (4.7) is persistent. However it can be shown to be a strongly persistent system.

<u>PROPOSITION 4.8</u>. Every solution, $u(t) = [u^j(t)]$, to (4.7) satisfies

$$\liminf_{t\to T_u} u^j(t) > 0 .$$

<u>PROOF</u>. The proof follows directly from the inequality

$$\dot{u}^j > u^j[a_{j0} - \bar{a}_{jj} u^j] ,$$

where $\bar{a}_{jj} = a_{jj} + \sum_{\substack{k=1 \\ k\neq j}}^{m} D^{jk} \alpha^{jk}$. /

Directed diffusion can cause solutions to become unbounded.

<u>THEOREM 4.9</u>. Let $u(t) = [u^j(t)]$ denote a solution to (4.7) with maximal interval of existence $[0, \infty)$ such that

$$\bar{a}_{kk} - D^{jk} \leq 0 \quad \text{and} \quad \bar{a}_{jj} - D^{kj} \leq 0$$

for some k and j , then $\limsup_{t\to\infty} u^{\ell}(t) = \infty$ for $\ell = k, j$.

<u>PROOF</u>. The differential equations for u^j and u^k yield the following inequalities:

$$\begin{aligned} \dot{u}^j &\geq u^j[a_{j0} - \bar{a}_{jj} u^j] + D^{jk}(u^k)^2 \\ \dot{u}^k &\geq u^k[a_{k0} - \bar{a}_{kk} u^k] + D^{kj}(u^j)^2 . \end{aligned} \tag{4.10}$$

Let $v = u^j + u^k$, then

$$\dot{v} \geq v \min\{a_{j0}, a_{k0}\} - [\bar{a}_{jj} - D^{kj}](u^j)^2 - [\bar{a}_{kk} - D^{jk}](u^k)^2 .$$

The hypotheses imply

$$\dot{v} \geq v \min\{a_{j0}, a_{k0}\}$$

which yields the result, $\lim_{t\to\infty} v(t) = \infty$. This implies

$$\limsup_{t\to\infty} u^{\ell}(t) = \infty$$

for $\ell = j$ or $\ell = k$. Without loss of generality, assume $\ell = j$. If $\limsup_{t\to\infty} u^k(t) < \infty$, then $\lim_{t\to\infty} u^j(t) = \infty$ and the differential inequality (4.10) for u^k yields a contradiction. Thus

$$\limsup_{t\to\infty} u^k(t) = \infty \quad \text{and} \quad \limsup_{t\to\infty} u^j(t) = \infty . \qquad /$$

For the case $m = 2$, two patches, solutions are bounded if the inequalities in Theorem 4.9 are reversed.

<u>THEOREM 4.11</u>. Let $u(t) = [u^j(t)]_{j=1}^2$ denote a solution to (4.7) such that

$$\bar{a}_{11} - D^{21} > 0 \quad \text{and} \quad \bar{a}_{22} - D^{12} > 0 ,$$

then $\limsup_{t\to\infty} u^j(t) < \infty$ for $j = 1, 2$.

<u>PROOF</u>. The differential inequalities (4.9) are replaced by equalities, where $j = 1$ and $k = 2$. Then for $v = u^1 + u^2$ we have

$$\dot{v} \le v \max\{a_{10}, a_{20}\} - \min\{\bar{a}_{11} - D^{21}, \bar{a}_{22} - D^{12}\}[(u^1)^2 + (u^2)^2]\}.$$

The differential inequality above is similar to the one given in (2.7). The rest of the proof proceeds in a manner similar to the proof for boundedness given in Theorem 2.5 for competitive random diffusion models. /

For the second version of the directed diffusion model, we analyze the logistic population in two patches. The model is described by

$$(4.12) \qquad \dot{u}^j = u^j[a_{j0} - a_{jj}\, u^j] + D^{jk}\, u^1[u^k - \alpha^{jk}\, u^j]$$

for $j, k = 1, 2$ and $j \neq k$, where all parameters are positive.

To differentiate between model (4.12), the other model for directed diffusion, (4.7), and the model for biased diffusion, (3.14), note that the diffusion rate depends on the density in patch one only. If the density in patch one is high, the rate of diffusion out of that patch is high and in addition if the density in patch two is low, diffusion into patch two increases. The reverse behavior occurs if the density in patch one is low.

The choice of u^1 as the moderator of the diffusion rate was arbitrary. Similar results are valid if u^1 is replaced by u^2.

Observe that initial value problems of (4.12) have unique positive solutions.

<u>PROPOSITION 4.13</u>. Given any $u_0 \in \mathbb{R}^2_+$ there exists a unique solution, $u(t) = [u^j(t)]_{j=1}^2$, of (4.12) such that $u(0) = u_0$ and $u(t) \in \mathbb{R}^2_+$ for $t \in [0, T_u)$.

Model (4.12) is a strongly persistent system.

<u>THEOREM 4.14</u>. Every solution $u(t) = [u^j(t)]$ to (4.12) satisfies

$$\liminf_{t \to T_u} u^j(t) > 0 \ , \quad j = 1, 2 \ .$$

<u>PROOF</u>. Equations (4.12) imply

$$\dot{u}^1 > u^1[a_{10} - \bar{a}_{11} u^1] \ ,$$

where $\bar{a}_{11} = a_{11} + D^{12} \alpha^{12}$. The comparison equation is the logistic, hence the conclusion holds for u^1 .

Suppose $\liminf_{t \to T_u} u^2(t) = 0$. A sequence of points $\{t_\ell\}_{\ell=1}^{\infty}$ can be chosen such that $t_\ell \to T_u$, $\lim_{\ell \to \infty} u^2(t_\ell) = 0$, and $\dot{u}^2(t_\ell) \leq 0$. There exists a T and M such that $t_\ell \in [T, T_u)$ implies

$$(4.15) \qquad u^1(t_\ell) \geq M > 0 \quad \text{and} \quad u^2(t_\ell) \leq \min\{\frac{a_{20}}{2a_{22}} \ , \ \frac{M}{\alpha^{21}}\} \ .$$

The differential equation for u^2 is

$$\dot{u}^2 = u^2[a_{20} - a_{22} u^2 + D^{21} u^1\{\frac{u^1}{u^2} - \alpha^{21}\}] \ .$$

For $t_\ell \in [T, T_u)$, the inequalities (4.15) imply

$$\dot{u}^2(t_\ell) \geq u^2(t_\ell) [\frac{a_{20}}{2}] > 0 \ ,$$

which contradicts the choice of the sequence $\{t_\ell\}$.

The conclusion of the theorem is established. /

The two versions of the logistic directed diffusion model, (4.7) and (4.12), have the same persistence behavior. Both models represent strongly persistent systems.

Consider next predation with directed diffusion. The model is given by

$$
(4.16)\qquad
\begin{aligned}
\dot{u}_1^j &= u_1^j[a_{10} - a_{12}\, u_2^j] + \sum_{\substack{k=1\\ k\neq j}}^{m} D_1^{jk}\,[(u_1^k)^2 - \alpha_1^{jk}(u_1^j)^2] \\
\dot{u}_2^j &= u_2^j[-a_{20} + a_{21}\, u_1^j] + \sum_{\substack{k=1\\ k\neq j}}^{m} D_2^{jk}[(u_2^k)^2 - \alpha_2^{jk}(u_2^j)^2]
\end{aligned}
$$

for $j = 1,\ldots, m$, where all parameters are positive. Initial value problems of (4.16) have unique positive solutions.

<u>PROPOSITION 4.17</u>. Given any $u_0 \in \mathbb{R}_+^{2+m}$ there exists a unique solution, $u(t) = [u_i^j(t)]$, to (4.16) such that $u(0) = u_0$ and $u(t) \in \mathbb{R}_+^{2+m}$ for $t \in [0, T_u)$.

Complete extinction cannot occur for model (4.16). The next proposition shows that at least one species must persist in each patch.

<u>PROPOSITION 4.18</u>. Let $u(t) = [u_i^j(t)]$ denote a solution of (4.16) . For each $j \in \{1, 2,\ldots, m\}$ there exists an $i \in \{1, 2\}$ such that

$$\limsup_{t\to T_u} u_i^j(t) > 0 .$$

PROOF. For purpose of contradiction assume $\lim_{t\to T_u} u_i^j(t) = 0$ for $i = 1, 2$. The differential equation for u_1^j yields

$$(4.19) \qquad \dot{u}_1^j > u_1^j[a_{10} - a_{11}^j u_1^j - a_{12} u_2^j] ,$$

where $a_{11}^j = \sum_{\substack{k=1 \\ k\neq j}}^{m} D_1^{jk} \alpha_1^{jk}$.

Choose T such that $t \in [T, T_u)$ implies

$$(4.20) \qquad u_1^j(t) < \frac{a_{10}}{4\, a_{11}^j} \quad \text{and} \quad u_2^j(t) < \frac{a_{10}}{4\, a_{12}} .$$

Inequality (4.19) coupled with (4.20) imply

$$\dot{u}_1^j(t) > u_1^j(t)[\frac{a_{10}}{2}]$$

for $t \in [T, T_u)$. Hence $u_1^j(t) > u_1^j(T)\, e^{\frac{a_{10}}{2}(t-T)}$ for $t \in (T, T_u)$, contradicting the original assumption. The desired result is obtained. /

Given certain restrictions on the parameters we can also show that system (4.16) is persistent.

THEOREM 4.21. Let $u(t) = [u_i^j(t)]$ denote a solution of (4.16) such that

(i) $D_i^{jk} = D_i^{kj}$, $i = 1, 2$, $j \neq k$

and

(ii) $\alpha_i^{jk} = 1$, $i = 1, 2$, $j \neq k$,

then $\limsup_{t\to T_u} u(t) > 0$.

PROOF. Consider the function

$$V_j = a_{21}[u_1^j - \frac{a_{20}}{a_{21}} - \frac{a_{20}}{a_{21}} \ln \frac{a_{21}\, u_1^j}{a_{20}}]$$

$$+ a_{12}[u_2^j - \frac{a_{10}}{a_{12}} - \frac{a_{10}}{a_{12}} \ln \frac{a_{12}\, u_2^j}{a_{10}}] .$$

The function V_j is a Lyapunov function for the homogeneous system, $D_i^{jk} \equiv 0$. It can be shown in a manner similar to the proof of Theorem 4.5, that

$$\bar{V} = \sum_{j=1}^{m} V_j$$

is positive definite and $\dot{\bar{V}} \leq 0$.

Suppose $\lim_{t \to T_u} u_i^j(t) = 0$ for some i and j . Then $\lim_{t \to T_u} V_j(t) = \infty$ and $\lim_{t \to T_u} \bar{V}(t) = \infty$. This contradicts $\dot{\bar{V}} \leq 0$, and establishes the conclusion of the theorem. /

For the final model with directed diffusion we consider the obligate mutualistic system,

$$(4.22) \qquad \dot{u}_i^j = u_i^j[-a_{i0} + \sum_{\substack{k=1 \\ k \neq i}}^{n} a_{ik}\, u_k^j] + \sum_{\substack{k=1 \\ k \neq j}}^{m} D_i^{jk}[(u_i^k)^2 - \alpha_i^{jk}(u_i^j)^2] .$$

for $i = 1,\ldots, n$ and $j = 1,\ldots, m$, where all parameters are positive. Initial value problems have unique positive solutions.

PROPOSITION 4.23. Given any $u_0 \in \mathbb{R}_+^{n+m}$ there exists a unique solution $u(t) = [u_i^j(t)]$ such that $u(0) = u_0$ and $u(t) \in \mathbb{R}_+^{n+m}$ for $t \in [0, T_u)$.

An obligate mutualistic system with directed diffusion does not persist. We show in the next theorem that there exist initial conditions which imply system extinction.

THEOREM 4.24. Let $u(t) = [u_i^j(t)]$ denote a solution to (4.22) such that the initial conditions are sufficiently small. Then

$$\lim_{t\to\infty} u(t) = 0 .$$

PROOF. Let $u_i = \sum_{j=1}^{m} u_i^j$. The differential equation for u_i is

$$\dot{u}_i = u_i[-a_{i0}] - \sum_{j=1}^{m} a_{ii}^j (u_i^j)^2 + \sum_{j=1}^{m} \sum_{\substack{k=1 \\ k\neq i}}^{n} a_{ik}\, u_k^j\, u_i^j$$

$$+ \sum_{j=1}^{m} \sum_{\substack{k=1 \\ k\neq j}}^{m} D_i^{jk} (u_i^k)^2 ,$$

where $a_{ii}^j = \sum_{\substack{k=1 \\ k\neq j}}^{m} D_i^{jk}\, \alpha_i^{jk}$. Therefore

$$\dot{u}_i < u_i[-a_{i0} + \max_k\{a_{ik}\} \sum_{\substack{k=1 \\ k\neq i}}^{n} u_k + \max_k\{ \sum_{\substack{j=1 \\ j\neq k}}^{m} D_i^{jk}\} u_i] .$$

Suppose the initial conditions are sufficiently small so that

$$[-a_{i0} + \max_k\{a_{ik}\} \sum_{\substack{k=1\\k\neq i}}^{n} u_k(0) + \max_k\{\sum_{\substack{j=1\\j\neq k}}^{m} D_i^{jk}\} u_i(0)] \leq -\varepsilon ,$$

where $\varepsilon > 0$. It can be shown in a manner similar to the proof of Theorem 2.35 that

$$\dot{u}_i(t) < -\varepsilon\, u_i(t)$$

for $t > 0$. The conclusion of the theorem holds. /

We have shown that Lotka-Volterra models with directed diffusion behave, in some instances, similarly to those with biased diffusion. Competition and predation with directed diffusion cannot lead to total system extinction and an obligate system with directed diffusion is of extinction type. There exists conditions which imply the logistic population with directed diffusion can become unbounded. However unlike the models with biased diffusion we were able to give sufficient conditions which imply system persistence of competitive and predator-prey systems with directed diffusion.

5. Predator-Prey Diffusion

An appropriate spatial model for a predator-prey system is one in which the predator moves to areas of high prey concentration and the prey moves to areas of low predator concentration. In the following model, (5.1), the predator leaves the patch it occupies if another patch has comparatively more prey. The prey leaves its patch if another patch has comparatively fewer predators. We study

a Lotka-Volterra predator-prey system in m patches, where u_1^j represents prey density in patch j and u_2^j represents predator density in patch j. The model is

$$
(5.1)\qquad
\begin{aligned}
\dot{u}_1^j &= u_1^j[a_{10} - a_{12}\, u_2^j] + \sum_{\substack{k=1\\k\neq j}}^{m} D_1^{jk}\, u_1^j[u_2^k - \alpha_1^{jk}\, u_2^j] \\
\dot{u}_2^j &= u_2^j[-a_{20} + a_{21}\, u_1^j] + \sum_{\substack{k=1\\k\neq j}}^{m} D_2^{jk}\, u_2^j[u_1^j - \alpha_2^{jk}\, u_1^k]
\end{aligned}
$$

for $j = 1,\ldots, m$, where all parameters are positive.

Initial value problems of (5.1) have unique positive solutions.

<u>PROPOSITION 5.2</u>. Given any $u_0 \in \mathbb{R}_+^{2+m}$ there exists a unique solution, $u(t) = [u_j^i(t)]$, of (5.1) such that $u(0) = u_0$ and $u(t) \in \mathbb{R}_+^{2+m}$ for $t \in [0, T_u)$.

We can show that for model (5.1) the prey population is persistent.

<u>THEOREM 5.3</u>. Every solution $u(t) = [u_i^j(t)]$ of (5.1) with maximal interval $[0, \infty)$ satisfies

$$\limsup_{t\to\infty}\ u_1^j(t) > 0\ ,\quad j = 1,\ldots, m\ .$$

<u>PROOF</u>. First, system (5.1) is rearranged as follows:

$$
(5.4)\qquad
\begin{aligned}
\dot{u}_1^j &= u_1^j[a_{10} - a_{12}^j\ u_2^j + \sum_{\substack{k=1\\k\neq j}}^{m} D_1^{jk}\ u_2^k] \\
\dot{u}_2^j &= u_2^j[-a_{20} + a_{21}^j\, u_1^j - \sum_{\substack{k=1\\k\neq j}}^{m} D_2^{jk}\, \alpha_2^{jk}\, u_1^k]\ ,
\end{aligned}
$$

where

$$a_{12}^{j} = a_{12} + \sum_{\substack{k=1 \\ k\neq j}}^{m} D_1^{jk} \alpha_1^{jk}$$

and

$$a_{21}^{j} = a_{21} + \sum_{\substack{k=1 \\ k\neq j}}^{m} D_2^{jk} .$$

Suppose $\lim_{t\to\infty} u_1^j(t) = 0$ for some j, then T can be chosen such that $t \geq T$ implies

$$u_1^j(t) < \frac{a_{20}}{2\, a_{21}^j} .$$

Equations (5.4) imply

$$\dot{u}_2^j < u_2^j[\frac{-a_{20}}{2}]$$

for $t \geq T$. Thus $\lim_{t\to\infty} u_2^j(t) = 0$. However this together with the equation (5.4) for $\dot{u}_1^j(t)$ imply $\lim_{t\to\infty} u_1^j(t) = \infty$ which contradicts the assumption $\lim_{t\to\infty} u_1^j(t) = 0$. Hence the desired result follows. /

Theorem 5.3 also holds if there is a density dependent term in the prey or predator equations, or if the parameters a_{ij} are patch dependent (implying a heterogeneous environment).

For two patches, persistence is determined by one parameter.

<u>THEOERM 5.5</u>. Let $u(t) = [u_i^j(t)]_{i=1}^{2}{}_{j=1}^{2}$ denote a solution of (5.1) with maximal interval of existence $[0, \infty)$ such that

$$p = a_{21}^{1} a_{21}^{2} - D_2^{12} \alpha_2^{12} D_2^{21} \alpha_2^{21} > 0 ,$$

then $\limsup_{t\to\infty} u(t) > 0$.

<u>PROOF</u>. According to Theorem 5.3, $\limsup_{t\to\infty} u_1^j(t) > 0$, $j = 1, 2$. Thus we only need to show that $\limsup_{t\to\infty} u_2^j(t) > 0$, $j = 1, 2$.

For purpose of contradiction assume $\lim_{t\to\infty} u_2^j(t) = 0$ for some j . Choose T_1 such that $t \geq T_1$,

$$u_2^j(t) < \frac{a_{10}}{2\, a_{12}^j} ,$$

then equations (5.4) imply

$$\dot{u}_1^j(t) > u_1^j(t)[\frac{a_{10}}{2}] .$$

This implies $\lim_{t\to\infty} u_1^j(t) = \infty$.

Consider the "persistence function",

$$V(t) = [u_2^1(t)]^{\beta^1} [u_2^2(t)]^{\beta^2} ,$$

where $\beta^k = \dfrac{\beta^j D_2^{jk} \alpha_2^{jk}}{a_{21}^k} > 0$, $k \neq j$. Then

$$\dot{V} = V[\beta^1 \frac{\dot{u}_2^1}{u_2^1} + \beta^2 \frac{\dot{u}_2^2}{u_2^2}]$$

or equivalently,

$$\dot{V} = V[-a_{20}(\beta^1 + \beta^2) + u_1^j \frac{\beta^j p}{a_{21}^k}] = V[-\gamma_1 + u_1^j \gamma_2]$$

where the definitions of γ_1 and γ_2 are clear. Both γ_1 and γ_2 are positive. Choose T_2 such that $t \geq T_2$ implies

$$u_1^j(t) > 2 \frac{\gamma_1}{\gamma_2} ,$$

then $\dot{V}(t) > \gamma_1 V(t)$. Hence $\lim_{t\to\infty} V(t) = \infty$ which in turn implies $\lim_{t\to\infty} u_2^k(t) = \infty$, since $\lim_{t\to\infty} u_2^j(t) = 0$. There exists a T_3 such that $t \geq T_3$ implies

$$u_2^j(t) < \frac{a_{10}}{2 D_1^{kj}} \quad \text{and} \quad u_2^k(t) > \frac{3 a_{10}}{a_{12}^k} .$$

The differential equation for u_1^k implies, for $t \geq T_3$,

$$\dot{u}_1^k < u_1^k[-\frac{3}{2} a_{10}] .$$

Consequently we get $\lim_{t\to\infty} u_1^k(t) = 0$, which contradicts Theorem 5.3. This contradiction establishes the conclusion of the theorem. /

Consider a more general predator-prey model, where predator satiation is included. We introduce the satiation function g^j given in section 2. System (5.1) is replaced by the following set of equations:

$$\dot{u}_1^j = u_1^j[a_{10} - a_{12}\, g^j(u_1^j)\, u_2^j] + \sum_{\substack{k=1\\k\neq j}}^{m} D_1^{jk}\, u_1^j[u_2^k - \alpha_1^{jk}\, u_2^j]$$

(5.6)

$$\dot{u}_2^j = u_2^j[-a_{20} + a_{21}\, g^j(u_1^j)u_1^j] + \sum_{\substack{k=1\\k\neq j}}^{m} D_2^{jk}\, u_2^j[u_1^j - \alpha_2^{jk}\, u_1^k]$$

for $j = 1,\ldots, m$, where all parameters are positive, $g^j \in C^1(\mathbb{R}_+)$ and $0 < g^j(x) < K < \infty$ for $x \in \mathbb{R}_+$. Initial value problems of (5.6) have unique positive solutions.

System (5.6) can be rearranged to look like equations (5.4), but where a_{12}^j and a_{21}^j have the following interpretations:

$$a_{12}^j = a_{12}\, g^j(u_1^j) + \sum_{\substack{k=1\\k\neq j}}^{m} D_1^{jk}\, \alpha_1^{jk}$$

$$a_{21}^j = a_{21}\, g^j(u_1^j) + \sum_{\substack{k=1\\k\neq j}}^{m} D_2^{jk} \quad .$$

The bounds on g^j yield bounds on the terms a_{12}^j and a_{21}^j ,

$$\underline{A}_{12}^{j} = \sum_{\substack{k=1\\k\neq j}}^{m} D_1^{jk}\alpha_1^{jk} < a_{12}^{j} < a_{12}\,K + \sum_{\substack{k=1\\k\neq j}}^{m} D_1^{jk}\alpha_1^{jk} = \overline{A}_{12}^{j}$$

$$\underline{A}_{21}^{j} = \sum_{\substack{k=1\\k\neq j}}^{m} D_2^{jk} < a_{21}^{j} < a_{21}\,K + \sum_{\substack{k=1\\k\neq j}}^{m} D_2^{jk} = \overline{A}_{21}^{j} \quad .$$

Thus the differential equations (5.6) have the following bounds:

$$(5.7)\qquad \begin{aligned} &u_1^j[a_{10} - \overline{A}_{12}^{j}\,u_2^j + \sum_{\substack{k=1\\k\neq j}}^{m} D_1^{jk}\,u_2^k] < \dot{u}_1^j < u_1^j[a_{10} - \underline{A}_{12}^{j}\,u_2^j + \sum_{\substack{k=1\\k\neq j}}^{m} D_1^{jk}\,u_2^k] \\ &u_2^j[-a_{20} + \underline{A}_{21}^{j}\,u_1^j + \sum_{\substack{k=1\\k\neq j}}^{m} D_2^{jk}\alpha_2^{jk}u_1^k] < \dot{u}_2^j \\ &\quad < u_2^j[-a_{20} + \overline{A}_{21}^{j}\,u_1^j + \sum_{\substack{k=1\\k\neq j}}^{m} D_2^{jk}\,\alpha_2^{jk}\,u_1^k] \end{aligned}$$

Theorems 5.3 and 5.4 hold for system (5.6).

<u>THEOREM 5.8</u>.

(i) Every solution, $u(t) = [u_i^j(t)]$, of (5.6) with maximal interval $[0, \infty)$ satisfies $\limsup_{t\to\infty} u_1^j(t) > 0$, $j = 1,\ldots, m$.

(ii) Let $u(t) = [u_i^j(t)]_{i=1}^{2}{}_{j=1}^{2}$ denote a solution of (5.6) with maximal interval of existence $[0, \infty)$ such that

$$\overline{p} = \underline{A}_{21}^{1}\,\underline{A}_{21}^{2} - D_2^{12}\,\alpha_2^{12}\,D_2^{21}\,\alpha_2^{21} > 0 \ ,$$

then $\limsup_{t\to\infty} u(t) > 0$.

PROOF. The proofs of (i) and (ii) are similar to the proofs of Theorems 5.3 and 5.5, if one applies the inequalities in (5.7). /

Part (i) of Theorem 5.8 holds if density-dependent terms are included and if the parameters are patch dependent. Persistence for system (5.6) is determined by one parameter, $\bar{p}$.

Complete extinction cannot occur in models (5.1) and (5.6); the prey persist in every patch. This is a reasonable conclusion from models (5.1) and (5.6), since not only does prey persistence occur in Lotka-Volterra models without diffusion, but with this type of diffusion, the prey preserve themselves by fleeing from the predator.

This concludes the analysis of the patch models. The continuous models are analyzed in the following chapter.

CHAPTER IV

CONTINUOUS MODELS

1. Introduction

Continuous models of ecological systems which incorporate spatial heterogeneity are studied in this chapter - i.e., partial differential equation models of random, biased, directed, and predator-prey diffusion. Recent research on the random diffusion model utilizing Lotka-Volterra dynamics is briefly summarized in the second section. In sections 3 - 5, the continuous analogues of the discrete models presented in Chapter III, i.e., biased, directed, and predator-prey diffusion models, respectively, are analyzed.

2. Random Diffusion

In the continuous models incorporating spatial heterogeneity, the reaction-diffusion equation most often studied is the equation with random diffusion. This model orginates from the simple diffusion or heat equation, $u_t = D\Delta u$, where the diffusion rate, D , is a positive constant.

The Lotka-Volterra random diffusion models have been studied by many scientists and mathematicians (Brown, 1980; Conway and Smoller, 1977; Fife, 1980; Fisher, 1937; Gopalsamy, 1977; Jorné and Carmi, 1977; Kierstead and Slobodkin, 1953; Leung, 1978; Levin, 1978; Levin and Segel, 1976; McMurtrie, 1978; Murray, 1977; Rosen, 1975; Segel and Jackson, 1972; Skellam, 1951; Turing, 1952; Williams and Chow, 1978). A brief summary of the results of these investigators will be given as they apply to persistence and extinction.

Initial boundary value problems are considered with either Dirichlet or Neumann boundary conditions prescribed on a bounded domain, B, having a sufficiently smooth boundary. If a positive classical solution exists to the Lotka-Volterra random diffusion model, then it is unique. Positive classical solutions exist for the Neumann problem, if there exists à priori bounds (Hastings, 1978).

The logistic random diffusion model is often referred to as Fisher's equation (Murray, 1977),

$$
\begin{aligned}
& u_t = u[1 - u] + D\Delta u \ ; \ x \in B \ , \quad t > 0 \ , \\
(2.1) \qquad & u(x, 0) = \phi(x) \ ; \quad x \in B, \\
& u = f(x, t) \quad \text{or} \quad \frac{\partial u}{\partial \eta} = 0 \ ; \quad x \in \partial B \ , \quad t > 0 \ .
\end{aligned}
$$

The difference between persistence and extinction for (2.1) depends on the type of boundary conditions prescribed. The Neumann problem has persistent solutions for $\phi(x) \in \mathbb{R}_+$. However the Dirichlet problem with $\phi(x) \in \mathbb{R}_+$ can give rise to extinction, if the boundary conditions are homogeneous and the diffusion rate, D, is sufficiently large.

The n-species competitive random diffusion model has recently been studied by Brown (1980),

$$
\begin{aligned}
& u_{i_t} = u_i[a_{i0} - \sum_{j=1}^{n} a_{ij} u_j] + D_i \Delta u_i \ ; \ x \in B \ , \ t > 0 \ , \\
(2.2) \qquad & u_i(x, 0) = \phi_i(x) \ ; \quad x \in B \ , \\
& u_i = f_i(x, t) \quad \text{or} \quad \frac{\partial u_i}{\partial \eta} = 0 \ ; \quad x \in \partial B \ , \ t > 0 \ .
\end{aligned}
$$

for $i = 1,\ldots, n$. He studied the Neumann problem and showed that for two species the feasible equilibrium of the Lotka-Volterra equations was an attractor for (2.2), provided the equilibrium was stable. For n-species, Brown (1980) stated "a sufficient condition which guarantees the existence and global asymptotic stability of a critical point with all species coexisting." In fact under certain conditions, for two species, every solution of the Neumann problem "decays uniformly and exponentially to the spatially homogeneous functions $(u_1(t), u_2(t))$, whose ω-limit set is a subset of the ω-limit set" of the ordinary differential equation model (Conway and Smoller, 1977). If the ω-limit set of the ordinary differential equation contains only points where at least one of the components is zero, then system (2.2) has component extinction. For the homogeneous Dirichlet problem, there exists sufficient conditions which imply every solution decays to zero (Conway, Hoff, and Smoller, 1978). Thus various types of persistence and extinction occur in both the Neumann and Dirichlet problems.

The predator-prey random diffusion model takes the following form:

$$
(2.3)\qquad
\begin{aligned}
&\left.\begin{aligned} u_{1_t} &= u_1[a_{10} - a_{12}\, u_2] + D_1\Delta u_1 \\ u_{2_t} &= u_2[-a_{20} + a_{21}\, u_1] + D_2\Delta u_2 \end{aligned}\right\} \quad ; \quad x \in B\ , \quad t > 0\ , \\
&u_i(x, 0) = \phi_i(x)\ ; \quad x \in B\ , \\
&u_i = f_i(x, t) \quad \text{or} \quad \frac{\partial u_i}{\partial n} = 0\ ; \quad x \in \partial B\ , \quad t > 0\ ,
\end{aligned}
$$

for $i = 1, 2$. Murray (1977) showed that the solution to the Neumann problem decays to a spatially homogeneous solution provided D_1 and D_2 are sufficiently large. Since the solutions to the spatially homogeneous equations are persistent, the Neumann problem with D_1 and D_2 sufficiently large is a persistent system. With density dependence included in the prey and predator equations, Leung (1978) showed that solutions to the Neumann problem converge uniformly on $\overline{B}$ to the homogeneous equilibrium, provided the equilibrium exists. For the homogeneous Dirichlet problem with density dependence, there exists conditions which result in system extinction (Conway, Hoff, and Smoller, 1978). In addition to system persistence and extinction, conditions exist for system (2.3) with density dependence which imply component persistence and extinction for the Neumann problem (Conway, Hoff, and Smoller, 1978).

Compared to the other Lotka-Volterra systems, the mutualistic random diffusion model has been studied very little. One of the reasons for this lack of interest is the fact that the solutions can display unbounded growth. However we complete the analysis of Lotka-Volterra systems with diffusion by including Lotka-Volterra mutualism in our discussions. The model is given by the equations (2.4) for $i = 1,\ldots, n$.

$$
\begin{aligned}
&u_{i_t} = u_i[-a_{i0} + \sum_{\substack{k=1\\k\neq i}}^{n} a_{ik}\, u_k] + D_i \Delta u_i \;;\quad x \in B\ ,\ t > 0\ ,\\
(2.4)\qquad &u_i(x, 0) = \phi_i(x)\ ;\quad x \in B\ ,\\
&u_i = f_i(x, t) \quad \text{or} \quad \frac{\partial u_i}{\partial \eta} = 0\ ;\quad x \in \partial B\ ,\quad t > 0\ .
\end{aligned}
$$

It has been shown that system extinction can occur in (2.4) for both the homogeneous Dirichlet and Neumann problems (Conway, Hoff, and Smoller, 1978). In fact if $\phi_i(x)$, $i = 1,\ldots, n$, are sufficiently small, complete system extinction occurs for the Neumann problem, independent of any restrictions on the parameters (Conway and Smoller, 1977). Thus (2.4) is not a persistent system. Extinction can also occur for the mutualistic model (2.5) for $i = 1, 2$ and for both models (2.4) and (2.5) with density dependent terms included.

$$
(2.5)\qquad
\begin{aligned}
&u_{1_t} = u_1[-a_{10} + a_{12}u_2] + D_1\Delta u_1 \\
&u_{2_t} = u_2[a_{20} + a_{21}u_1 - a_{22}u_2] + D_2\Delta u_2 \qquad ; \quad x \in B , \quad t > 0 , \\
&u_i(x, 0) = \phi(x) \ ; \quad x \in B , \\
&u_i = f_i(x, t) \quad \text{or} \quad \frac{\partial u_i}{\partial \eta} = 0 \ ; \quad x \in \partial B , \quad t > 0 .
\end{aligned}
$$

There has been much investigation of solution behavior to Lotka-Volterra random diffusion models. Presented here were some of these results as they pertained to persistence and extinction. In the next sections we study the effect of nonlinear diffusion on Lotka-Volterra systems.

3. Biased Diffusion

The biased diffusion model without biological reaction terms takes the form: $u_t = Du\Delta u$. Species move randomly, but the rate of movement depends on population density.

We analyze a Lotka-Volterra system with biased diffusion on a bounded domain B ($\subseteq \mathbb{R}^m$) of sufficiently smooth boundary (such that the Divergence Theorem holds) with either Dirichlet or Neumann boundary conditions. The domain B satisfies the interior sphere condition - a necessary condition to apply the maximum principle.

The Lotka-Volterra biased diffusion model is given by

$$
\begin{aligned}
& u_{i_t} = u_i[a_{i0} + \sum_{j=1}^{n} a_{ij}\, u_j] + D_i\, u_i\, \Delta u_i \;;\quad x \in \overline{B}\,,\ t > 0\,, \\
(3.1)\qquad & u_i(x, 0) = \phi_i(x)\;;\quad x \in B\,, \\
& u_i = f_i(x, t) \quad \text{or} \quad \frac{\partial u_i}{\partial n} = 0\;;\quad x \in \partial B\,,\quad t > 0
\end{aligned}
$$

for $i = 1,\ldots, n$, where D_i is a positive constant. The question of existence of nonnegative solutions to (3.1) is still unanswered. However numerical results seem to indicate, in certain instances, that solutions exist. It is assumed that a classical solution exists to (3.1). By a classical solution to (3.1) we mean a function $u(x, t) = [u_i(x, t)]$, with $u_i \in C^2(\overline{B}) \times C^1((0, \infty))$, $i = 1,\ldots, n$, such that the partial differential equation is satisfied on $\overline{B} \times (0, \infty)$ and such that $u(x, t)$ satisfies the specified initial and boundary conditions, $\phi_i \in C(\overline{B})$ and $f_i \in C^2(\partial B) \times C^1((0, \infty))$ for $i = 1,\ldots, n$.

For the remainder of this section we discuss uniqueness, positivity, boundedness, and persistence of classical solutions to (3.1). Results for the general Lotka-Volterra system (3.1) are presented first, then results for the particular systems of competition, predation, and mutualism are presented.

In Theorem 3.2, it is proved that a positive classical solution to (3.1) is unioue.

<u>THEOREM 3.2</u>. Every positive classical solution to (3.1) is unique, if $\phi_i(x) > 0$ for $x \in \overline{B}$, $i = 1,\ldots, n$.

<u>PROOF</u>. We prove the solution is unique at each point (x, t) where $x \in B$ and $t \in (0, T]$ for T arbitrary. Assume there exists two positive classical solutions, v and w , where $v = [v_i]_{i=1}^n$ and $w = [w_i]_{i=1}^n$. Let $u = v - w$, then u satisfies the following:

$$
\begin{aligned}
&u_{i_t} = a_{i0}u_i + \sum_{j=1}^{n} a_{ij}[v_iv_j - w_iw_j] + D_iv_i\Delta v_i - D_iw_i\Delta w_i \ ; \\
&\qquad\qquad\qquad\qquad\qquad\qquad\qquad\qquad\qquad\qquad x \in \overline{B} \ , \ t > 0 \ , \\
(3.3) \quad &u_i(x, 0) = 0 \ ; \ x \in B \ , \\
&u_i = 0 \ \text{ or } \ \frac{\partial u_i}{\partial n} = 0 \ ; \ x \in \partial B \ , \ t > 0
\end{aligned}
$$

for $i = 1,\ldots, n$. If $u \equiv 0$ on $B \times (0, T)$ we are done. Therefore suppose there exists a point $P = (x, t) \in B \times (0, T)$ such that $u(P) \neq 0$. Define

$$t_0 = \text{l.u.b.}\{t | u(x, t) = 0 \ , \ x \in \overline{B} \ , \ t \geq 0\}.$$

Since $t_0 \in [0, T)$, there exists an interval $(t_0, t_0 + a)$ and a j such that $u_j(x, t) \neq 0$ for some $x \in B$ and all $t \in (t_0, t_0 + a)$.

Consider system (3.3) for $x \in B$ and $t \in [t_0, t_0 + a)$, $u(x, t_0) = 0$, $x \in B$. Multiply the partial differential equation in (3.3) by u_i and integrate over the spatial domain B to obtain

$$\frac{d}{dt}\int_B \frac{u_i^2}{2}\,dx = a_{i0}\int_B u_i^2\,dx + \sum_{j=1}^{n} a_{ij}\int_B u_i[v_iv_j - w_iw_j]dx$$

$$+ \int_B D_i[u_iv_i\Delta v_i - u_iw_i\Delta w_i]\,dx\ .$$

An application of Green's identity to the above equation yields

$$\frac{d}{dt}\int_B \frac{u_i^2}{2}\,dx = a_{i0}\int_B u_i^2\,dx + \sum_{j=1}^{n} a_{ij}\int_B u_i[v_iv_j - w_iw_j]dx$$

$$(3.4)\qquad - \int_B D_i[\nabla(u_iv_i)\cdot\nabla v_i - \nabla(u_iw_i)\cdot\nabla w_i]dx$$

$$= I_1 + I_2 + I_3\ ,$$

where I_j represents the jth integral of the right side of equation (3.4). Make the following substitution in the integrand of I_2:

$$a_{ij}\,u_i[v_iv_j - w_iw_j] = a_{ij}\,u_i[u_iv_j + w_iu_j]$$

$$= a_{ij}\,u_i^2v_j + a_{ij}\,u_iu_j\,w_i\ .$$

Employing an interpolation inequality of Gilbarg and Trudinger (1977), the inequality

$$a_{ij}\,u_iu_jw_i \le a_{ij}^2\,w_i^2\,\frac{u_i^2}{2\varepsilon_i} + \frac{\varepsilon_i}{2}\,u_j^2\ ,$$

is obtained for every $\varepsilon_i > 0$. After rearrangement apply the interpolation inequality to the integrand of I_3 also. This leads to

$$\begin{aligned}
&\nabla(u_i v_i) \cdot \nabla v_i - \nabla(u_i w_i) \cdot \nabla w_i \\
&\qquad = \nabla u_i \cdot [v_i \nabla v_i - w_i \nabla w_i] + u_i[|\nabla v_i|^2 - |\nabla w_i|^2] \\
&\qquad = \nabla u_i \cdot [u_i \nabla v_i + w_i \nabla u_i] + u_i \nabla u_i \cdot [\nabla v_i + \nabla w_i] \\
&\qquad = 2u_i \nabla v_i \cdot \nabla u_i + w_i |\nabla u_i|^2 + u_i \nabla u_i \cdot \nabla w_i
\end{aligned}$$

and

$$\pm 2u_i \nabla v_i \cdot \nabla u_i \le u_i^2 \frac{|\nabla v_i|^2}{\varepsilon_i} + \varepsilon_i |\nabla u_i|^2 ,$$

$$\pm u_i \nabla w_i \cdot \nabla u_i \le u_i^2 \frac{|\nabla w_i|^2}{2\varepsilon_i} + \frac{\varepsilon_i}{2} |\nabla u_i|^2$$

for every $\varepsilon_i > 0$.

The above equations and ineoualities applied to (3.4) yield the following inequality:

$$\begin{aligned}
&\frac{d}{dt} \int_B \frac{u_i^2}{2} dx \\
&\qquad \le \int_B u_i^2 [a_{i0} + \sum_{j=1}^{n} a_{ij} v_j + \sum_{j=1}^{n} a_{ij}^2 \frac{w_i^2}{2\varepsilon_i} + D_i \frac{|\nabla v_i|^2}{\varepsilon_i} + D_i \frac{|\nabla w_i|^2}{2\varepsilon_i}] dx \\
&\qquad + \int_B \frac{\varepsilon_i}{2} \sum_{j=1}^{n} u_j^2 dx + \int_B |\nabla u_i|^2 [\tfrac{3}{2} D_i \varepsilon_i - D_i w_i] dx .
\end{aligned}$$

Since w_i is positive, ε_i can be chosen sufficiently small such that $\frac{3}{2}\varepsilon_i - w_i < 0$ on $\bar{B} \times [t_0, t_0 + a]$. Then

$$(3.5) \qquad \frac{d}{dt}\int_B \frac{u_i^2}{2}\,dx \le \int_B k_i(v, w_i, |\nabla v_i|^2, |\nabla w_i|^2)\,\frac{u_i^2}{2}\,dx + \varepsilon_i \sum_{j\neq i} \int_B \frac{u_j^2}{2}dx ,$$

for $i = 1,\ldots, n$, where k_i is a constant depending on v, w_i, $|\nabla v_i|^2$, and $|\nabla w_i|^2$.

Let $E_i(t) = \int_B \frac{u_i^2}{2}\,dx$ and $E(t) = [E_i(t)]_{i=1}^n$. Consider the following linear system,

$$(3.6) \qquad \frac{d\,E(t)}{dt} = C\,E(t) ,$$

where $C = [c_{ij}]$ is an $n \times n$ constant matrix and

$$c_{ij} = \begin{cases} k_i + 1 , & i = j \\ \varepsilon_i + 1 , & i \neq j \end{cases} .$$

Let $E(t_0) = 0 = \int_B u^2(x, t_0)dx$. Thus the unique solution to (3.6) for $t \in [t_0, t_0 + a)$ is given by $E(t) \equiv 0$. System (3.6) is a comparison system to equations (3.5) since

$$\frac{d}{dt}\int_B \frac{u_i^2}{2}\,dx < \sum_{j=1}^{n} c_{ij} \int_B \frac{u_j^2}{2}\,dx$$

for $t \in (t_0, t_0 + a)$ and $i = 1,\ldots, n$. Corollary 6 in Appendix B implies $\int_B \frac{u_i^2}{2}\, dx < 0$ for $t \in (t_0, t_0 + a)$. A contradiction has been reached, hence $u(x, t) \equiv 0$ on $B_T = \bar{B} \times [0, T]$ or $v = w$ on B_T . Since T was arbitrary we have the desired result. /

The initial boundary value problem for competition with biased diffusion is

$$
\begin{aligned}
& u_{i_t} = u_i[a_{i0} - \sum_{j=1}^{n} a_{ij} u_j] + D_i u_i \Delta u_i \ ; \quad x \in \bar{B} \ , \ t > 0 \ , \\
(3.7) \qquad & u_i(x, 0) = \phi_i(x) \ ; \quad x \in B \ , \\
& u_i = f_i(x, t) \ \text{ or } \ \frac{\partial u_i}{\partial n} = 0 \ ; \quad x \in \partial B \ , \quad t > 0
\end{aligned}
$$

for $i = 1,\ldots, n$, where the parameters a_{i0}, a_{ij}, and D_i are positive.

Solutions of (3.7) are bounded and positive under certain conditions. The required conditions are stated in the following theorems and corollary.

<u>THEOREM 3.8</u>. Every nonnegative classical solution of (3.7) with Dirichlet or Neumann boundary conditions is bounded provided

(i) ϕ_i is bounded, $i = 1,\ldots, n$

and in addition for Dirichlet boundary conditions,

(ii) f_i is bounded, $i = 1,\ldots, n$.

<u>PROOF</u>. Suppose ϕ_i and f_i are bounded by a constant, M_i , independent of x and t . We will show

$$(3.9) \qquad u_i(x, t) \leq \max\{M_i, \frac{a_{i0}}{a_{ii}}\} , \; i = 1,\ldots, n .$$

Suppose (3.7) has Dirichlet boundary conditions and there exists a point $P_0 = (x_0, t_0)$ such that $u_i(P_0) > \max\{M_i, \frac{a_{i0}}{a_{ii}}\}$. Thus $\max\limits_{B_{t_0}} u_i(x, t) = u_i(x_1, t_1) = u_i(P_1) \geq u_i(P_0)$, where $P_1 \in B \times (0, t_0]$ and $B_{t_0} = \overline{B} \times [0, t_0]$. At P_1 , $u_{i_t}(P_1) \geq 0$ and $\Delta u_i(P_1) \leq 0$. Evaluating the partial differential equation at P_1 , we find

$$0 \leq u_{i_t} = u_i[a_{i0} - a_{ii}u_i] - \sum_{\substack{j=1 \\ j\neq i}}^{n} a_{ij}\, u_j u_i + D_i u_i\, \Delta u_i < 0 \quad ,$$

since $u_i(P_1) > \frac{a_{i0}}{a_{ii}}$. This contradiction establishes the theorem in the case of Dirichlet boundary conditions.

Suppose (3.7) has Neumann boundary conditions and there exists a point $P_1 = (x_1, t_1)$ such that $\max\limits_{B_{t_0}} u_i(x, t) = u_i(P_1) > \max\{M_i, \frac{a_{i0}}{a_{ii}}\}$ for some $t_0 < \infty$. Therefore $P_1 \in \overline{B} \times (0, t_0]$. If $P_1 \in B \times (0, t_0]$ we reach a contradiction as in the case of Dirichlet boundary conditions. Therefore assume $x_1 \in \partial B$. Then $\Delta u_i(P_1) \leq 0$, since if not, there exists a region $R \subseteq B$ (with the interior sphere property) such that $x_1 \in \partial R$ and $\Delta u_i(x, t_1) > 0$ for $x \in R$. The Maximum Principle in Appendix B implies $\frac{\partial u_i(P_1)}{\partial n} > 0$, contradicting the homogeneous Neumann boundary conditions. Thus $\Delta u_i(P_1) \leq 0$ and $u_{i_t}(P_1) \geq 0$. Evaluating the partial differential equation at P_1 , we again reach a contradiction. The desired result is obtained, $u_i(x, t) \leq \{M_i, \frac{a_{i0}}{a_{ii}}\}$, $x \in \overline{B}$, $t \geq 0$ ./

In the preceding theorem we assumed that the solution was non-negative. For the two-species case this assumption is implied by some additional hypotheses on the initial and boundary conditions.

<u>THEOREM 3.10</u>. Assume $u_i(x, t)$, $i = 1, 2$ satisfies the initial boundary value problem (3.7), where $n = 2$. If

(i) $0 < \phi_i(x) < \dfrac{a_{i0}}{a_{ii}}$, $x \in \overline{B}$, $i = 1, 2$,

(ii) $\dfrac{a_{12}}{a_{22}} < \dfrac{a_{10}}{a_{20}} < \dfrac{a_{11}}{a_{21}}$,

and in addition for Dirichlet boundary conditions,

(iii) $0 < f_i(x, t) < \dfrac{a_{i0}}{a_{ii}}$, $x \in \partial B$, $t \geq 0$, $i = 1, 2$,

then $u_i(x, t) > 0$, $i = 1, 2$.

<u>PROOF</u>. Define $t_0 = \text{l.u.b.}\{t | u_i(x, t) > 0 ,\ i = 1,2 ,\ x \in \overline{B} ,\ t \geq 0\}$. If $t_0 < \infty$, there exists a point $P_0 = (x_0, t_0)$ such that either $u_1(P_0) = 0$ or $u_2(P_0) = 0$.

Suppose $u_1(P_0) = 0$. Consider the function

$$v_1(x, t) = u_1(x, t) + \varepsilon(t - t_0) ,$$

where $\varepsilon > 0$ is sufficiently small so that the minimum of v_1 does not occur on $\overline{B} \times \{0\}$ nor on $\partial B \times [0, t_0]$ in the case of Dirichlet boundary conditions. Also assume $0 < \varepsilon < \dfrac{1}{t_0 k}$, where $\dfrac{1}{k} = \dfrac{a_{12}}{a_{11}}\left[\dfrac{a_{10}}{a_{12}} - \dfrac{a_{20}}{a_{22}}\right]$ which is positive because of assumption (ii).

Consider the solution $u_i(x, t)$, $i = 1, 2$ of the Dirichlet problem. We have $\min\limits_{B_{t_0}} v_1(x, t) = v_1(x_1, t_1) = v_1(P_1) \leq 0$ where $P_1 \in B \times (0, t_0]$. At P_1 , $v_{1_t}(P_1) \leq 0$ and $\Delta v_1(P_1) \geq 0$ which

implies $u_{1_t}(P_1) \leq -\varepsilon$ and $\Delta u_1(P_1) \geq 0$. From the partial differential equation evaluated at P_1 , we find

$$0 > u_{1_t} = u_1[a_{10} - \sum_{j=1}^{2} a_{1j}\, u_j] + D_1\, u_1 \Delta u_1$$

or

$$(3.11) \qquad 0 > u_1[a_{10} - \sum_{j=1}^{2} a_{1j}\, u_j] \; .$$

By choice of ε and v_1 it follows that

$$\begin{aligned} u_1(P_1) &= v_1(P_1) - \varepsilon(t_1 - t_0) \\ &\leq \varepsilon(t_0 - t_1) \\ &\leq \frac{(t_0 - t_1)}{t_0 k} \end{aligned}$$

or

$$(3.12) \qquad 0 < u_1(P_1) \leq \frac{1}{k} \; .$$

Inequalities (3.11) and (3.12) yield the following:

$$0 > a_{10} - \frac{a_{11}}{k} - a_{12}\, u_2(P_1) = a_{10} - a_{12}[\frac{a_{10}}{a_{12}} - \frac{a_{20}}{a_{22}}] - a_{12}\, u_2(P_1)$$

or

$$u_2(P_1) > \frac{a_{20}}{a_{22}} .$$

Therefore $\max\limits_{B_{t_0}} u_2(x, t) = u_2(x_2, t_2) = u_2(P_2) > \frac{a_{20}}{a_{22}}$ and $P_2 \in B \times (0, t_0]$ because of assumptions (i) and (iii). At P_2, $u_{2_t}(P_2) \geq 0$ and $\Delta u_2(P_2) \leq 0$. Evaluate the partial differential equation at P_2 to obtain a contradiction,

$$0 \leq u_{2_t} \leq u_2[a_{20} - a_{22} u_2] < 0 .$$

Hence for the Dirichlet problem, $u_1(P_0) > 0$.

Consider the solution $u_i(x, t)$, $i = 1, 2$ to the Neumann problem. Proceeding in a manner similar to the one for the Dirichlet problem, we find that if $x_1 \in B$ and $x_2 \in B$ a contradiction is reached. Therefore assume $\min\limits_{B_{t_0}} v_1(x, t) = v_1(x_1, t_1) = v_1(P_1)$ is such that $x_1 \in \partial B$. Then $\Delta v_1(P_1) \geq 0$, for if not, there exists a region $R \subseteq B$ (with the interior sphere property), such that $x_1 \in \partial R$ and $\Delta v_1(x, t_1) < 0$ for $x \in R$. The Minimum Principle in Appendix B implies $\frac{\partial v(P_1)}{\partial \eta} < 0$, a contradiction to $\frac{\partial v_1(P_1)}{\partial \eta} = \frac{\partial u_1(P_1)}{\partial \eta} = 0$. Therefore at P_1, $u_{1_t}(P_1) < 0$ and $\Delta u_1(P_1) \geq 0$. Evaluating the partial differential equation at P_1 yields the same result as the one for the Dirichlet problem, $u_2(P_1) > \frac{a_{20}}{a_{22}}$. If $\max\limits_{B_{t_0}} u_2(x, t) = u_2(x_2, t_2) = u_2(P_2)$ is such that $x_2 \in B$, we reach a contradiction. Thus assume $x_2 \in \partial B$, which implies $\Delta u_2(P_2) \leq 0$.

If $\Delta u_2(P_2) > 0$, there exists a region $R \subseteq B$ (with the interior sphere property), such that $x_2 \in \partial R$ and $\Delta u_2(x, t_2) > 0$ for $x \in R$. The Maximum Principle in Appendix B implies $\frac{\partial u_2}{\partial n}(P_2) > 0$, contradicting the boundary conditions. Thus at P_2 , $u_{2_t}(P_2) \geq 0$ and $\Delta u_2(P_2) \leq 0$. The partial differential equation evaluated at P_2 yields a contradiction. Hence for the Neumann problem, $u_1(P_0) > 0$.

For the case $u_2(P_0) = 0$, define

$$v_2(x, t) = u_2(x, t) + \varepsilon(t - t_0) .$$

Assume $\varepsilon > 0$ is sufficiently small and positive so that the minimum of v_2 does not occur on $\overline{B} \times \{0\}$ nor on $\partial B \times [0, t_0]$ in the case of Dirichlet boundary conditions. Also assume $0 < \varepsilon < \frac{1}{t_0 k}$, where $\frac{1}{k} = \frac{a_{21}}{a_{22}}[\frac{a_{20}}{a_{21}} - \frac{a_{10}}{a_{11}}]$. The proof proceeds in a similar manner to the case $u_1(P_0) = 0$ and a contradiction is reached.

Therefore we have shown $t_0 = \infty$ and $u_i(x, t) > 0$, $i = 1, 2$ for $x \in \overline{B}$ and $t \geq 0$. /

Theorems 3.8 and 3.10 imply solutions to (3.7) are positive and bounded.

<u>COROLLARY 3.13</u>. Assume a classical solution, $u_i(x, t)$, $i = 1, 2$, exists to system (3.7). If

(i) $0 < \phi_i(x) < \frac{a_{i0}}{a_{ii}}$, $x \in \overline{B}$, $i = 1, 2$,

(ii) $\frac{a_{12}}{a_{22}} < \frac{a_{10}}{a_{20}} < \frac{a_{11}}{a_{21}}$,

and in addition for Dirichlet boundary conditions,

(iii) $0 < f_i(x, t) < \frac{a_{i0}}{a_{ii}}$, $x \in \partial B$, $t \geq 0$, $i = 1, 2$,

then $0 < u_i(x, t) \leq \frac{a_{i0}}{a_{ii}}$, $i = 1, 2$.

The conditions prescribed in Corollary 3.13 correspond to a stable feasible equilibrium for two-species Lotka-Volterra competition. If the initial and boundary conditions lie in the hatched region of the $u_1 - u_2$ plane in Figure 4, then the solution remains there for all time; the region is invariant.

If a classical solution exists for $t \geq 0$ to (3.7), then under the assumptions of Corollary 3.13, the system has finite time persistence - i.e., $\int_B u_i(x, t)\, dx > 0$, $i = 1, 2$, for $0 \leq t < \infty$. For nonnegative classical solutions to the Dirichlet problem, finite time persistence is an inherent assumption in the hypotheses of Theorem 3.10 and Corollary 3.13, since $\int_B u_i(x, t)dx > 0$, $i = 1, 2$ for $0 < t < \infty$ follows from the continuity assumptions on u . Conditions for system persistence for infinite time, $\limsup_{t\to\infty} \int_B u_i(x, t)dx > 0$, have not been determined.

Consider system (3.7) for $n = 1$, the logistic model with biased diffusion,

$$
\begin{aligned}
& u_t = u[a_{10} - a_{11}\, u] + Du\Delta u \ ; \quad x \in \overline{B} \ , \quad t > 0 \ , \\
(3.14) \qquad & u(x, 0) = \phi(x) \ ; \quad x \in B, \\
& u = f(x, t) \quad \text{or} \quad \frac{\partial u}{\partial \eta} = 0 \ ; \quad x \in \partial B \ , \quad t > 0 .
\end{aligned}
$$

Applying some of the preceding theorems to (3.14), we find that positive classical solutions are unique (Theorem 3.2) and nonnegative classical solutions are bounded (Theorem 3.8). The additional assumptions required for positivity in Theorem 3.10 are not needed for the logistic model.

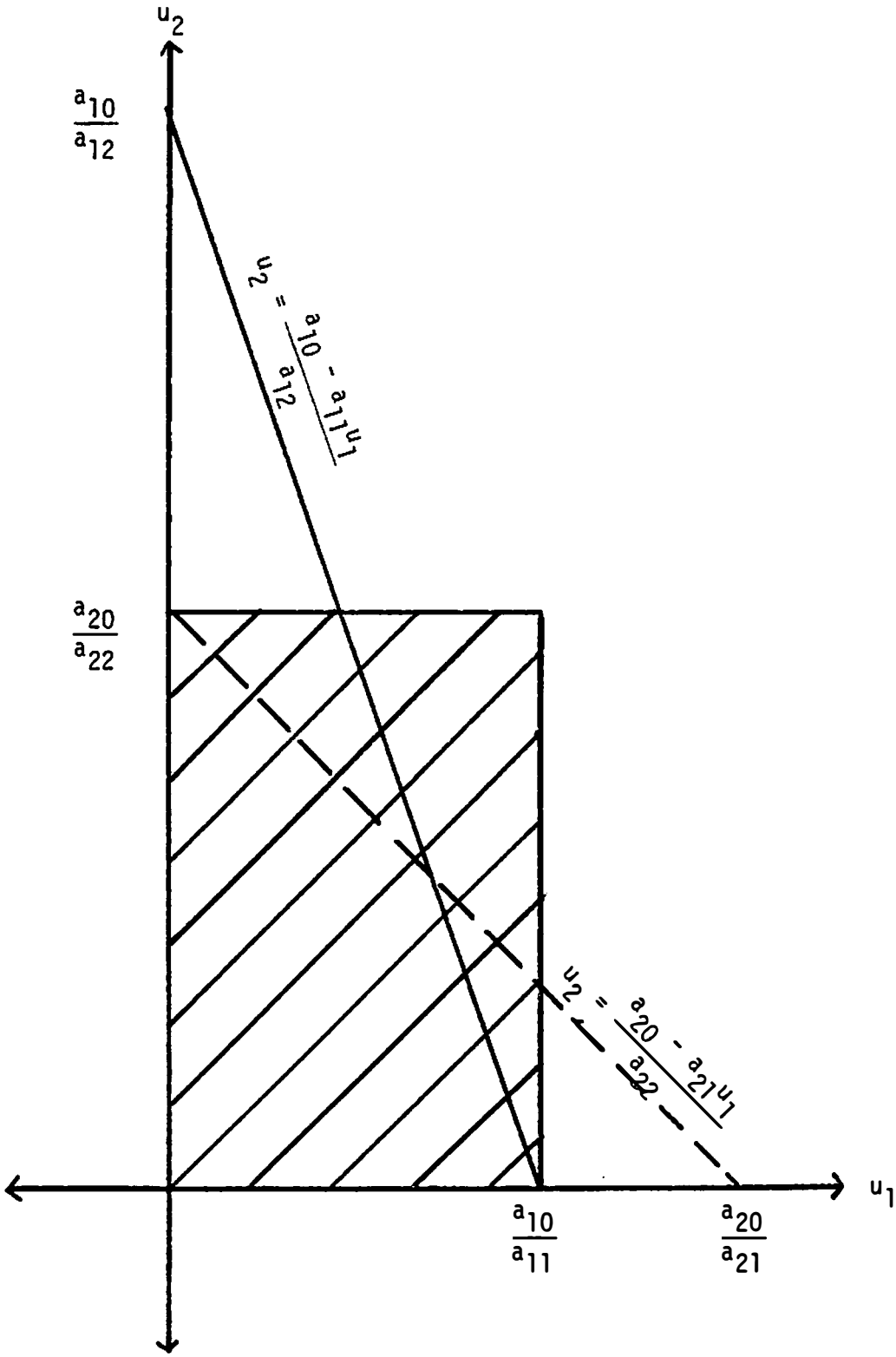

FIGURE 4

Solutions to (3.7) remain in the hatched region.

<u>THEOREM 3.15</u>. Assume $u(x, t)$ is a classical solution to (3.14). If

(i) $\phi(x) > 0$, $x \in \overline{B}$

and in addition for Dirichlet boundary conditions,

(ii) $f(x, t) > 0$, $x \in \partial B$, $t \geq 0$,

then $u(x, t) > 0$.

<u>PROOF</u>. Define $t_0 = \text{l.u.b.}\{t | u(x, t) > 0 , \ x \in \overline{B} , \ t \geq 0\}$. If $t_0 < \infty$, there exists a point $P_0 = (x_0, t_0)$ such that $u(P_0) = 0$. Define

$$v(x, t) = u(x, t) + \varepsilon(t - t_0) ,$$

where $\varepsilon > 0$ is sufficiently small and positive so that the minimum of v does not occur on $\overline{B} \times \{0\}$ nor on $\partial B \times [0, t_0]$ in the case of Dirichlet boundary conditions. Also assume $0 < \varepsilon < \dfrac{a_{10}}{t_0 a_{11}}$.

Then $\min\limits_{B_{t_0}} v(x, t) = v(x_1, t_1) = v(P_1) \leq 0$.

Consider the solution, $u(x, t)$, to the Dirichlet problem. Then $P_1 \in B \times (0, t_0]$, $v_t(P_1) \leq 0$, and $\Delta v(P_1) \geq 0$ which imply $u_t(P_1) \leq -\varepsilon$ and $\Delta u(P_1) \geq 0$. The choice of ε and v imply

$$\begin{aligned} u(P_1) &\leq \varepsilon(t_0 - t_1) \\ &\leq \frac{a_{10}}{t_0 a_{11}} (t_0 - t_1) \end{aligned}$$

or

$$0 \leq u(P_1) \leq \frac{a_{10}}{a_{11}} .$$

Evaluate the partial differential equation at P_1 to arrive at a contradiction,

$$0 > u_t = u[a_{10} - a_{11} u] + Du\Delta u \geq 0 .$$

Therefore $u(P_1) > 0$ and $t_0 = \infty$. The conclusion of the theorem holds for the Dirichlet problem.

Consider the solution, $u(x, t)$, to the Neumann problem. If $x_1 \in B$ we obtain a contradiction by following the same argument as in the Dirichlet problem. Therefore assume $x_1 \in \partial B$. Then $\Delta v(P_1) \geq 0$, since if not, there exists a region $R \subseteq B$ (with the interior sphere property) such that $x_1 \in \partial R$ and $\Delta v(x, t_1) < 0$ for $x \in R$. The Minimum Principle in Appendix B implies $\frac{\partial v(P_1)}{\partial \eta} < 0$, which contradicts the boundary conditions, since $\frac{\partial v(P_1)}{\partial \eta} = \frac{\partial u(P_1)}{\partial \eta} = 0$. At P_1, $v(P_1) \leq 0$, $v_t(P_1) \leq 0$, and $\Delta v(P_1) \geq 0$ which imply $u(P_1) \leq \frac{a_{10}}{a_{11}}$, $u_t(P_1) \leq -\varepsilon$, and $\Delta u(P_1) \geq 0$. The partial differential equation evaluated at P_1 yields a contradiction. Therefore $u(P_1) > 0$ and $t_0 = \infty$. The desired result is obtained for the Neumann problem. /

Theorem 3.15 implies finite time persistence for classical solutions to (3.14).

There is little known about the predator-prey biased diffusion model, except that solutions are unique. We discuss the predator-prey model in connection with directed diffusion in the next section.

The remaining type of Lotka-Volterra interaction is mutualism. In mutualistic systems with biased diffusion solutions exhibit the same type of behavior as without diffusion. For small initial and boundary conditions system extinction occurs and for large initial and boundary conditions solutions remain large. The obligate mutualistic system is formulated below:

$$u_{i_t} = u_i[-a_{i0} + \sum_{\substack{j=1 \\ j\neq i}}^{n} a_{ij}\, u_j] + D_i u_i \Delta u_i \;;\quad x \in \overline{B}\,,\ t > 0\,,$$

$$(3.16)\qquad u_i(x, 0) = \phi_i(x)\;;\quad x \in B\,,$$

$$u_i = f_i(x, t) \quad \text{or} \quad \frac{\partial u_i}{\partial n} = 0\;;\quad x \in \partial B\,,\quad t > 0$$

for $i = 1,\ldots, n$, where the parameters a_{i0}, a_{ij}, and D_i are positive.

<u>THEOREM 3.17</u>. Assume a classical solution, $u(x, t) = [u_i(x, t)]$, exists to (3.16). If

(i) $\phi_i(x) > \max\limits_{j\neq i} \{\frac{a_{j0}}{a_{ji}}\}\,,\quad x \in \overline{B}\,,\ i = 1,\ldots, n$

and in addition for Dirichlet boundary conditions,

(ii) $f_i(x, t) > \max\limits_{j\neq i}\{\frac{a_{j0}}{a_{ji}}\}\,,\quad x \in \partial B\,,\quad 0 \leq t \leq \infty\,,\ i = 1,\ldots, n\,,$

then $u_i(x, t) > \max\limits_{j\neq i} \{\frac{a_{j0}}{a_{ji}}\}\,,\quad i = 1,\ldots, n\,.$

<u>PROOF</u>. Let α_i be any positive number such that

$$\min_{\overline{B}} \phi_i(x) > \alpha_i > \max_{j\neq i}\{\frac{a_{j0}}{a_{ji}}\} \quad \text{and} \quad \min_{\partial B\times[0,\infty]} f_i(x, t) > \alpha_i > \max_{j\neq i}\{\frac{a_{j0}}{a_{ji}}\}\,.$$

We will show $u_i(x, t) > \alpha_i$. Define $t_0 = \text{l.u.b.}\{t | u_i(x, t) > \alpha_i$, $x \in \overline{B}$, $t \geq 0$, $i = 1,\ldots, n\}$. Assume $t_0 < \infty$. Then there exists a point $P_0 = (x_0, t_0)$ such that $u_i(P_0) = \alpha_i$ for some i .

Consider the solution, $u(x, t)$, to the Dirichlet problem. The minimum of u_i on $\overline{B} \times [0, t_0]$ occurs at P_0 , where $x_0 \in B$ and $t_0 > 0$ because of assumptions (i) and (ii) and the definition of t_0 . At P_0 , $u_i(P_0) = \alpha_i$, $u_{i_t}(P_0) \leq 0$, and $\Delta u_i(P_0) \geq 0$. Evaluate the partial differential equation for u_i at P_0 , then

$$0 \geq u_{i_t} = \alpha_i[-a_{i0} + \sum_{\substack{j=1 \\ j\neq i}}^{n} a_{ij}\, u_j] + D_i\, \alpha_i \Delta u_i$$

or

$$0 \geq [-a_{i0} + \sum_{\substack{j=1 \\ j\neq i}}^{n} a_{ij}\, u_j] .$$

The definition of t_0 implies $u_j(P_0) \geq \alpha_j > \max_{k\neq j}\{\frac{a_{k0}}{a_{kj}}\} \geq \frac{a_{i0}}{a_{ij}}$. Thus we obtain a contradiction,

$$0 \geq [-a_{i0} + \sum_{\substack{j=1 \\ j\neq i}}^{n} a_{ij}\, \alpha_j] > 0 .$$

Therefore $t_0 = \infty$ and the desired conclusion follows for the Dirichlet problem,

$$(3.18) \qquad u_i(x, t) > \alpha_i > \max_{j\neq i}\{\frac{a_{j0}}{a_{ji}}\} , \quad i = 1,\ldots, n .$$

a)

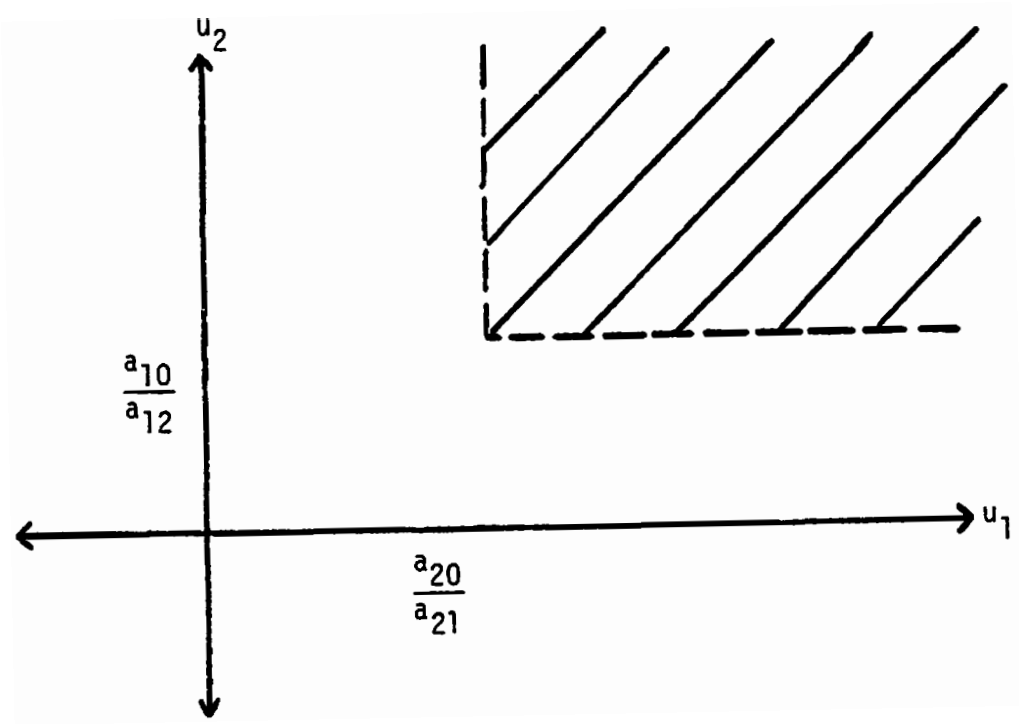

b)

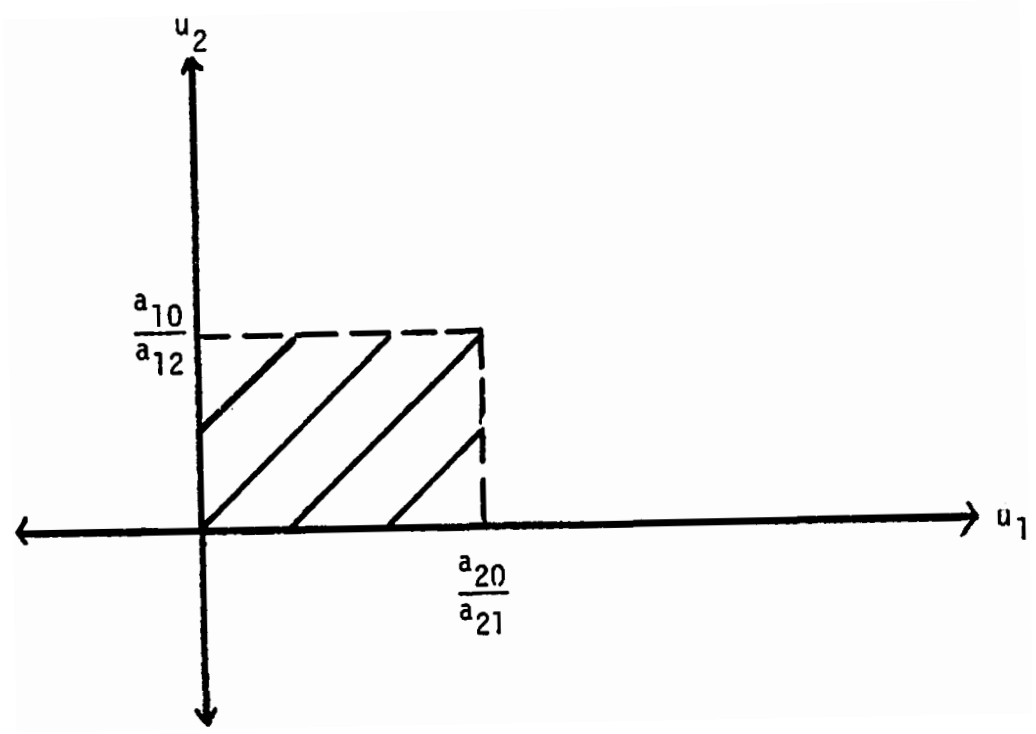

FIGURE 5

Solutions to (3.16) remain in the hatched region.

and $t_0 > 0$ because of assumptions (i) and (ii) and the definition of t_0. At P_0, $u_i(P_0) = \beta_i$, $u_{i_t}(P_0) \geq 0$, and $\Delta u_i(P_0) \leq 0$. Evaluate the partial differential equation for u_i at P_0, then

$$0 \leq u_{i_t} = \beta_i[-a_{i0} + \sum_{\substack{j=1 \\ j\neq i}}^{n} a_{ij}\, u_j] + D_i\, \beta_i\, \Delta u_i$$

or

$$0 \leq [-a_{i0} + \sum_{\substack{j=1 \\ j\neq i}}^{n} a_{ij}\, u_j] .$$

The definition of t_0 implies $u_j(P_0) \leq \beta_j < \frac{1}{n-1} \min_{k\neq j} \{\frac{a_{k0}}{a_{kj}}\} \leq \frac{1}{n-1} \frac{a_{i0}}{a_{ij}}$.

$$0 \leq [-a_{i0} + \sum_{\substack{j=1 \\ j\neq i}}^{n} a_{ij}\, \beta_j] < 0 .$$

The above contradiction establishes the desired conclusion for the Dirichlet problem,

$$u_i(x, t) < \beta_i , \quad i = 1,\ldots, n .$$

Consider the solution, $u(x, t)$, to the Neumann problem. The only case we need to consider is when $x_0 \in \partial B$, since otherwise the proof is the same as for Dirichlet boundary conditions. Therefore assume the maximum of $u_i(x, t)$ occurs at P_0, where $x_0 \in \partial B$. By applying the Maximum Principle we can show $\Delta u_i(P_0) \leq 0$. Also

$u_i(P_0) = \beta_i$ and $u_{i_t}(P_0) \geq 0$. The partial differential equation for u_i evaluated at P_0 yields a contradiction. The conclusion of the theorem holds for the Neumann problem. /

As a consequence of Theorem 3.19, we can show system extinction occurs for positive classical solutions to (3.16).

THEOREM 3.20. Assume a positive classical solution, $u(x, t) = [u_i(x, t)]$ exists to (3.16) for the homogeneous Dirichlet problem and the Neumann problem. (By a positive solution we mean $u(x, t) > 0$ on $B \times [0, \infty)$). If the initial conditions satisfy hypothesis (i) of Theorem 3.19, then system (3.16) is of extinction type - i.e., $\lim_{t\to\infty} \int_B u(x, t)dx = 0$.

PROOF. Integrate the partial differential equations for u_i over the domain B . We have

$$(3.21) \qquad \frac{d}{dt}\int_B u_i\, dx = -a_{i0}\int_B u_i\, dx + \sum_{\substack{j=1\\ j\neq i}}^{n} a_{ij}\int_B u_i u_j\, dx + D_i\int_B u_i \Delta u_i dx$$

Apply Green's identity to the last integral on the right side of (3.21),

$$\frac{d}{dt}\int_B u_i dx = -a_{i0}\int_B u_i dx + \sum_{\substack{j=1\\ j\neq i}}^{n} a_{ij}\int_B u_i u_j dx - D_i\int_B |\nabla u_i|^2 dx$$

Hypothesis (i) of Theorem 3.19 implies $u_j(x, t) < \beta_j < \frac{1}{n-1}\min_{k\neq j}\{\frac{a_{k0}}{a_{kj}}\}$. Thus we obtain

$$\frac{d}{dt}\int_B u_i\, dx < [-a_{i0} + \sum_{\substack{j=1\\ j\neq i}}^{n} a_{ij}\, \beta_j] \int_B u_i dx \leq -\varepsilon \int_B u_i\, dx ,$$

where $\varepsilon > 0$. The above differential inequality implies $\lim_{t\to\infty} \int_B u_i(x, t)dx = 0$. The conclusion of the theorem has been established. /

Solutions tend to the origin if the initial conditions lie in the hatched region of Figure 5b); the region is invariant. Since system extinction occurs for system (3.16), independent of any assumptions on the parameters, persistence is not possible. We can do the same type of analysis for another mutualistic system to show system extinction occurs and to show the solutions are large if the initial and boundary conditions are large. We state the theorem, without giving its proof.

<u>THEOREM 3.22</u>. Assume a positive classical solution, $u_i(x, t)$, $i = 1, 2$, exists to the initial boundary value problem

$$\begin{aligned}
&u_{1_t} = u_1[a_{10} - a_{11}\, u_1 + a_{12}\, u_2] + D_1\, u_1\, \Delta u_1 \\
&\qquad\qquad\qquad\qquad\qquad\qquad\qquad\qquad ;\ x \in \overline{B}\ ,\ t > 0\ , \\
&u_{2_t} = u_2[-a_{20} + a_{21}\, u_1] + D_2\, u_2 \Delta u_2 \\
(3.23)\qquad &u_i(x, 0) = \phi_i(x)\ ;\quad x \in B\ , \\
&u_i = f_i(x, t) \quad \text{or} \quad \frac{\partial u_i}{\partial n} = 0\ ;\quad x \in \partial B\ ,\quad t > 0
\end{aligned}$$

for $i = 1, 2$, where all the parameters are assumed to be positive.

(a) If

(i) $\phi_1(x) > \dfrac{a_{20}}{a_{21}}$ and $\phi_2(x) > 0$, $x \in \overline{B}$,

(ii) $\dfrac{a_{10}}{a_{11}} > \dfrac{a_{20}}{a_{21}}$,

and in addition for Dirichlet boundary conditions,

(iii) $f_1(x, t) > \dfrac{a_{20}}{a_{21}}$ and $f_2(x, t) > 0$, $x \in \partial B$, $0 \leq t \leq \infty$,

then $u_1(x, t) > \dfrac{a_{20}}{a_{21}}$ and $u_2(x, t) > 0$.

(b) If

(i) $\phi_1(x) > \dfrac{a_{20}}{a_{21}}$ and $\phi_2(x) > \dfrac{a_{11}\, a_{20} - a_{10}\, a_{21}}{a_{12}\, a_{21}}$, $x \in \overline{B}$,

(ii) $\dfrac{a_{10}}{a_{11}} < \dfrac{a_{20}}{a_{21}}$,

and in addition for Dirichlet boundary conditions,

(iii) $f_1(x, t) > \dfrac{a_{20}}{a_{21}}$ and $f_2(x, t) > \dfrac{a_{11}\, a_{20} - a_{10}\, a_{21}}{a_{12}\, a_{21}}$,

$x \in \partial B$, $0 \leq t \leq \infty$,

then $u_1(x, t) > \dfrac{a_{20}}{a_{21}}$ and $u_2(x, t) > \dfrac{a_{11}\, a_{20} - a_{10}\, a_{21}}{a_{12}\, a_{21}}$.

(c) If

(i) $\phi_1(x) < \dfrac{a_{20}}{a_{21}}$ and $\phi_2(x) < \dfrac{a_{11}\, a_{20} - a_{10}\, a_{21}}{a_{12}\, a_{21}}$, $x \in \overline{B}$,

(ii) $\dfrac{a_{10}}{a_{11}} < \dfrac{a_{20}}{a_{21}}$,

and in addition for Dirichlet boundary conditions,

(iii) $f_1(x, t) < \dfrac{a_{20}}{a_{21}}$ and $f_2(x, t) < \dfrac{a_{11}\, a_{20} - a_{10}\, a_{21}}{a_{12}\, a_{21}}$,

$x \in \partial B$, $t \geq 0$,

then $u_1(x, t) < \dfrac{a_{20}}{a_{21}}$ and $u_2(x, t) < \dfrac{a_{11}\, a_{20} - a_{10}\, a_{21}}{a_{12}\, a_{21}}$.

In fact, a stronger result holds for initial conditions satisfying Theorem 3.22(c) for the Neumann problem and homogeneous Dirichlet problem (3.23). Extinction occurs if the hypotheses (i) and (ii) hold in Theorem 3.22(c) . Graphs of the $u_1 - u_2$ plane corresponding to parts (a), (b), and (c) of Theorem 3.22 are given in Figure 6a) - c) . The hatched regions are invariant.

We conclude this section by discussing an interesting property about strongly persistent solutions to the Neumann biased diffusion model. All spatial heterogeneities are damped for large time; solutions become spatially independent for large time. A precise statement of this result follows.

<u>THEOREM 3.24</u>. Consider the initial boundary value problem ,

$$
\begin{aligned}
& u_{i_t} = f_i(u_1, \ldots, u_n) + D_i u_i \Delta u_i \ ; \quad x \in \overline{B} \ , \quad t > 0 \ , \\
(3.25) \qquad & u_i(x, 0) = \phi_i(x) \ ; \quad x \in B \ , \\
& \frac{\partial u_i}{\partial \eta} = 0 \ ; \quad x \in \partial B \ , \quad t > 0
\end{aligned}
$$

for $i = 1, \ldots, n$, where D_i is a positive constant. If

(i) $\min_i \{D_i\} = d$ is sufficiently large

and

(ii) $\sup_u \{\|\nabla_u f\|_\infty\} = m$ is bounded,

then every positive classical solution $u(x, t) = [u_i(x, t)]$ to (3.25) with property

(iii) $\liminf_{t \to \infty} u_i(x, t) > \varepsilon_i > 0$ for almost every $x \in B$,

satisfies $\lim_{t \to \infty} \int_B |\nabla u|^2 dx = 0$.

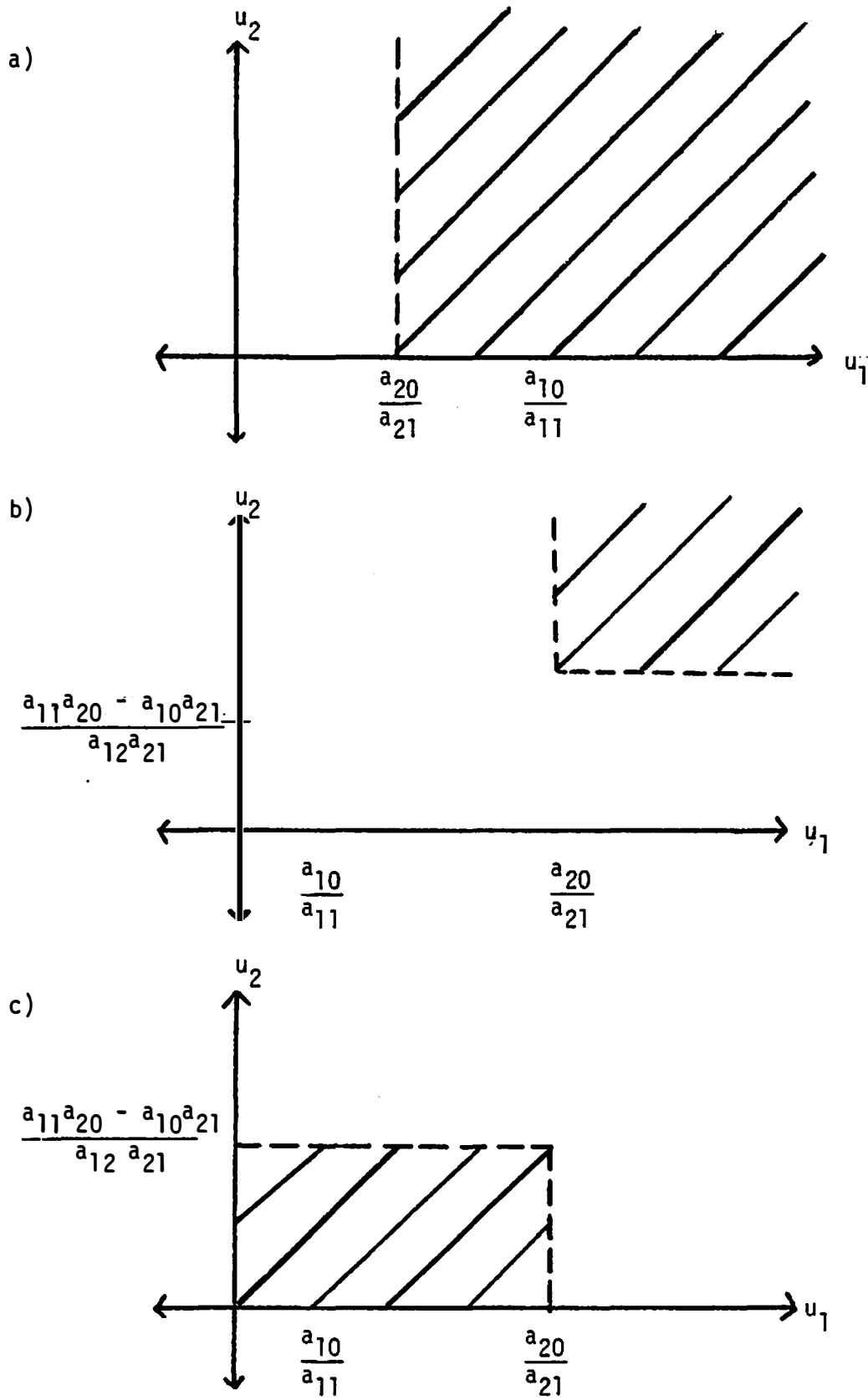

FIGURE 6

Solutions to (3.23) remain in hatched region.

PROOF. Let

$$\psi(t) = \frac{1}{2}\int_B |\nabla u|^2\, dx = \frac{1}{2}\int_B \langle \nabla u, \nabla u\rangle\, dx .$$

Then

$$\dot{\psi}(t) = \int_B \langle \nabla u, \nabla u_t\rangle dx = \int_B \langle \nabla u, \nabla(f + Du\ \Delta u)\rangle\, dx ,$$

where $f + Du\ \Delta u = [f_i + D_i u_i\ \Delta u_i]_{i=1}^n$. Apply Green's identity to the above equation.

$$\dot{\psi}(t) = \int_B \langle \nabla u, \nabla_u f \cdot \nabla u\rangle\, dx - \int_B Du|\Delta u|^2 dx$$

$$\leq m \int_B |\nabla u|^2\, dx - d \min_i \{\varepsilon_i\} \int_B |\Delta u|^2\, dx .$$

Lemma B in Appendix B implies

$$\dot{\psi}(t) \leq m \int_B |\nabla u|^2 dx - d \min_i \{\varepsilon_i\}\ \lambda \int_B |\nabla u|^2\, dx ,$$

where λ is the smallest positive eigenvalue of $-\Delta$ with homogeneous Neumann boundary conditions on B . Thus

$$(3.26) \qquad \dot{\psi}(t) \leq 2[m - d\lambda \min_i \{\varepsilon_i\}]\, \psi(t) .$$

If d is sufficiently large, then $m - d\lambda \min_i\{\varepsilon_i\}$ is negative and inequality (3.26) implies $\lim_{t\to\infty} \psi(t) = \lim_{t\to\infty} \int_B |\nabla u|^2\, dx = 0$. /

Theorem 3.24 is similar to the result for random diffusion as proved by Murray (1977). He proved that "if the diffusion is sufficiently strong all spatial inhomogeneities are smoothed out" (Murray, 1977). A Lotka-Volterra competitive system satisfies condition (ii). Therefore if diffusion is sufficiently large, a strongly persistent competitive system will become spatially homogeneous for large time. Biased diffusion has little effect on the system.

We have shown that competitive systems with biased diffusion have solutions which are positive and bounded and the system is persistent in finite time. Persistence criteria for the predator-prey system with biased diffusion have not been determined. The mutualistic system (3.16) is of extinction type; there exists initial conditions such that solutions tend to zero. Next we analyze the effect of directed diffusion on Lotka-Volterra systems.

4. Directed Diffusion

The directed diffusion model without biological growth has the following form: $u_t = D \operatorname{div}(u\nabla u)$. Directed diffusion was formulated from first principles by Gurney and Nisbet (1975) and discussed in Chapter II. Species move from high to low population densities.

We study a Lotka-Volterra system with directed diffusion on a bounded domain $B(\subseteq \mathbb{R}^m)$ with a sufficiently smooth boundary (such that the Divergence Theorem holds) with either Dirichlet or Neumann boundary conditions. The domain B satisfies the interior sphere condition.

The existence of nonnegative solutions for system (4.1) is not known. However we give an example of a Cauchy problem with directed diffusion, where existence has been established. The general Lotka-Volterra model with directed diffusion is

$$
\begin{aligned}
&u_{i_t} = u_i[a_{i0} + \sum_{j=1}^{n} a_{ij}\, u_j] + D_i \operatorname{div}(u_i\, \nabla u_i) \;;\quad x \in \overline{B}\,,\ t > 0\,,\\
(4.1)\qquad &u_i(x, 0) = \phi_i(x) \;;\quad x \in B\,,\\
&u_i = f_i(x, t) \quad \text{or} \quad \frac{\partial u_i}{\partial \eta} = 0 \;;\quad x \in \partial B\,,\quad t > 0
\end{aligned}
$$

for $i = 1,\ldots, n$, where D_i is a positive parameter. System (4.1) represents a degenerate parabolic system for nonnegative solutions.

The following parabolic Cauchy problem has been studied by Gurtin and MacCamy (1977),

$$
\begin{aligned}
&u_t = ru + (u^{\alpha})_{xx} \;;\quad x \in \mathbb{R}\,,\ t > 0\,,\\
(4.2)\qquad &u(x, 0) = \phi(x) \;;\quad x \in \mathbb{R}\,,
\end{aligned}
$$

where $\alpha > 1$. The differential equation represents directed diffusion for $\alpha = 2$. The existence of a weak solution to (4.2) has been established. If ϕ is a nonnegative, bounded, Lipschitz continuous function, there exists a unique weak solution to (4.2) which is classical at any point where $u(x, t)$ is positive. In addition, if the initial condition, φ , is positive on a bounded interval and zero elsewhere, then the solution, u , satisfies

$$u(x, t)\begin{cases} < 0 , & \xi_1(t) < x < \xi_2(x) \\ \\ = 0 , & \text{elsewhere,} \end{cases}$$

where $\xi_1(t)$ and $\xi_2(t)$ are nonincreasing and nondecreasing continuous curves, respectively.

The biological reaction mechanism of (4.2) represents exponential growth or decay. If $r > 0$, then $\lim_{t\to\infty} \xi_i(t) = \begin{cases} +\infty , & i = 1 \\ -\infty , & i = 2 \end{cases}$ and if $r < 0$, then $\lim_{t\to\infty} \xi_i(t) = c_i$, where $|c_i| < \infty$. This result contrasts with the behavior of the familiar parabolic Cauchy problem,

$$u_t = ru + D\Delta u \; ; \quad x \in \mathbb{R} \; , \quad t > 0 \; ,$$

$$u(x, 0) = \phi(x) \; ; \quad x \in \mathbb{R} \; ,$$

where waves are propagated with infinite speed.

As illustrated in the simple exponential model, (4.2), directed diffusion affects system behavior differently than random diffusion. In the remainder of this section the effect of directed diffusion on Lotka-Volterra systems of the type (4.1) is analyzed. Uniqueness, positivity, boundedness, extinction, and persistence of classical solutions are discussed. Many of the results for biased diffusion are applicable to directed diffusion since the proofs for both models are similar.

Positive classical solutions to (4.1) are unique.

THEOREM 4.3. Every positive classical solution, $u(x, t) = [u_i(x, t)]$, is unique if $\phi_i(x) > 0$ for $x \in \overline{B}$, $i = 1,\ldots, n$.

PROOF. The proof is similar to the proof of Theorem 3.2. /

A weak persistence result is valid for Lotka-Volterra systems provided some $a_{k0} > 0$. This is proved in Theorem 4.4.

THEOREM 4.4. Assume a nonnegative classical solution, $u(x, t) = [u_i(x, t)]$, exists to (4.1) for the Neumann problem or the homogeneous Dirichlet problem. If $a_{k0} > 0$ for some k, then either

(i) $\limsup_{t\to\infty} \int_B u_k(x, t)dx > 0$

or

(ii) $\limsup_{t\to\infty} \|u_i(\cdot, t)\|_\infty > 0$ for some i.

PROOF. Suppose the conclusion is false, $\lim_{t\to\infty} \int_B u_k(x, t)dx = 0$ and $\lim_{t\to\infty} \|u_i(\cdot, t)\|_\infty = 0$ for $i = 1,\ldots, n$. Consider $\int_B u_k(x, t)dx = \int_B u_k\, dx$. As a consequence of the Divergence Theorem, we obtain

$$\frac{d}{dt}\int_B u_k\, dx = a_{k0}\int_B u_k\, dx + \sum_{j=1}^{n} a_{kj}\int_B u_k\, u_j\, dx .$$

Hölders inequality implies

$$\frac{d}{dt}\int_B u_k\, dx \geq \int_B u_k[a_{k0} + \sum_{j=1}^{n} a_{kj}\, h(a_{kj})\, \|u_j(\cdot, t)\|_\infty]dx ,$$

where $h(a_{kj}) = \begin{cases} 1, & a_{kj} < 0 \\ 0, & a_{kj} \geq 0 \end{cases}$. Choose T such that $t \geq T$ implies $\|u_j(\cdot, t)\|_\infty < \left|\frac{a_{k0}}{2n\, a_{kj} + 1}\right|$ for $j = 1,\ldots, n$. For $t \geq T$,

$$\frac{d}{dt}\int_B u_k \, dx \geq \frac{a_{k0}}{2}\int_B u_k \, dx ,$$

which implies $\lim_{t\to\infty}\int_B u_k \, dx = \infty$. Hence this contradiction establishes the conclusion of the theorem. /

Theorem 4.4 can be applied to competitive, predator-prey, and some mutualistic systems. In these systems there exist at least one species with positive intrinsic growth rate, a_{k0} . Complete extinction cannot occur in the sense of $\lim_{t\to\infty}\|u_i(\cdot, t)\|_\infty = 0$ for $i = 1,\ldots, n$; the system has weak component persistence.

Theorem 4.4 can be applied to any diffusion model with Lotka-Volterra interaction terms in which the diffusion term upon integration over B is nonnegative. The theorem does not apply to biased diffusion, since $\int_B D_i u_i \, \Delta u_i \, dx = D_i \, u_i \frac{\partial u_i}{\partial n}\Big|_{\partial B} - \int_B D_i |\nabla u_i|^2 \, dx$.

We now specialize to Lotka-Volterra competition. The initial boundary value problem is

$$\begin{aligned} &u_{i_t} = u_i[a_{i0} - \sum_{j=1}^{n} a_{ij}\, u_j] + D_i \operatorname{div}(u_i \nabla u_i); \quad x \in \bar{B},\ t > 0 , \\ (4.5)\qquad &u_i(x, 0) = \phi_i(x) \ ; \quad x \in B , \\ &u_i = f_i(x, t) \quad \text{or} \quad \frac{\partial u_i}{\partial n} = 0 \ ; \quad x \in \partial B , \quad t > 0 \end{aligned}$$

for $i = 1,\ldots, n$, where a_{i0} , a_{ij} , and D_i are positive parameters.

Nonnegative classical solutions to (4.5) are bounded and positive under certain restrictions.

THEOREM 4.6. Every nonnegative classical solution, $u(x, t) = [u_i(x, t)]$, to (4.5) is bounded such that for the Neumann problem $B \subseteq \mathbb{R}$ and

(i) $\phi_i(x)$ is bounded

and in addition for Dirichlet boundary conditions,

(ii) $f_i(x, t)$ is bounded.

PROOF. The proof is similar to the proof of Theorem 3.8. /

THEOREM 4.7. Assume a classical solution, $u_i(x, t) = 1, 2$, exists to (4.5) such that for the Neumann problem $B \subseteq \mathbb{R}$. If

(i) $0 < \phi_i(x) < \dfrac{a_{i0}}{a_{ii}}$, $x \in \bar{B}$, $i = 1, 2$;

(ii) $\dfrac{a_{12}}{a_{22}} < \dfrac{a_{10}}{a_{20}} < \dfrac{a_{11}}{a_{21}}$,

and in addition for Dirichlet boundary conditions,

(iii) $0 < f_i(x, t) < \dfrac{a_{i0}}{a_{ii}}$, $x \in \partial B$, $0 \leq t \leq \infty$, $i = 1, 2$,

then $0 < u_i(x, t) \leq \dfrac{a_{i0}}{a_{ii}}$, $i = 1, 2$.

PROOF. The proof is similar to the proof of Theorem 3.10. /

Under the given restrictions of Theorem 4.7, solutions have finite time persistence. We investigate persistence for infinite time next. First, we prove two lemmas.

LEMMA 4.8. If $u(x, t) > 0$, $x \in B$, $t > 0$, $\lim_{t\to\infty} \int_B u(x, t)\, dx = 0$, and $\int_B dx = |B| < \infty$, then $\lim_{t\to\infty} \int_B \ln u(x, t)\, dx = -\infty$.

PROOF. There exists a number N_n for every integer n such that $t \geq N_n$ implies

$$(4.9) \qquad \int_B u(x, t)dx < \frac{1}{n^2} .$$

For t fixed, define

$$A_n(t) = \{x|u(x, t) > \frac{1}{n}\} \text{ and } A_n^c(t) = \{x|u(x, t) \leq \frac{1}{n}\} .$$

Then $B = A_n(t) \cup A_n^c(t)$ and $\emptyset = A_n(t) \cap A_n^c(t)$.

Suppose $t \geq N_n$ and n is sufficiently large, then apply inequality (4.9),

$$\frac{1}{n^2} > \int_B u(x, t)dx \geq \int_{A_n(t)} \frac{1}{n} dx = \frac{1}{n} |A_n(t)| .$$

Thus for $t \geq N_n$,

$$|A_n(t)| < \frac{1}{n} \text{ and } |A_n^c(t)| > |B| - \frac{1}{n} > 0 .$$

Let $M < 0$ be given. If $t \geq N_n$, then the above inequalities imply

$$\int_B \ln u(x, t)\, dx = \int_{A_n(t)} \ln u(x, t)dx + \int_{A_n^c(t)} \ln u(x, t)dx$$

$$\leq \int_{A_n(t)} u(x, t)dx + \int_{A_n^c(t)} \ln \frac{1}{n} dx$$

$$\leq \int_B u(x, t)dx + [|B| - \tfrac{1}{n}] \ln \tfrac{1}{n}$$

$$< \frac{1}{n^2} + [|B| - \tfrac{1}{n}] \ln \tfrac{1}{n} .$$

If n is sufficiently large,

$$\int_B \ln u(x, t)dx < M .$$

It follows that $\lim_{t\to\infty} \int_B \ln u(x, t)dx = -\infty$. /

<u>LEMMA 4.10</u>. Assume $V(t) = V(u_1(t),\ldots, u_n(t)) = V(u(t))$ is a Lyapunov function for the ordinary differential equations

$$\frac{du_i}{dt} = f_i(u) , \quad i = 1,\ldots, n .$$

The function V is positive definite on $\mathbb{R}^n_+ = \{[u_i]_{i=1}^n | u_i > 0 ,$ $i = 1,\ldots, n\}$ and $V = 0$ if and only if $u \equiv u^* =$ constant. Also $\dot{V}(t)$ is negative semi-definite (negative definite) on $\mathbb{R}^n_+$. Assume further that the reaction-diffusion system

$$u_{i_t} = f_i(u) + \operatorname{div}(D_i(x, t, u) \nabla u_i) ; \quad x \in \overline{B} , \ t > 0 ,$$

$$(4.11) \qquad u_i(x, 0) = \phi_i(x) ; \quad x \in B ,$$

$$D_i(x, t, u) = 0 \quad \text{or} \quad \frac{\partial u_i}{\partial \eta} = 0 ; \quad x \in \partial B, \quad t > 0$$

has a positive classical solution, $u(x, t) = [u_i(x, t)]_{i=1}^n$.

If $\frac{\partial^2 V}{\partial u_i^2} > 0$ and $\frac{\partial^2 V}{\partial u_i \partial u_j} = 0$, $i \neq j$ for $u \in \mathbb{R}_+^n$, then there exists a functional $\bar{V}(t) = \int_B V(u(x, t))dx$ for system (4.11) with the following two properties:

(i) $\bar{V}(t)$ is positive definite

and

(ii) $\dot{\bar{V}}(t)$ is negative semi-definite (negative definite) on $\mathbb{R}_+^n$, provided $D_i(x, t, u) \geq 0$ for almost every $x \in B$.

<u>PROOF</u>. The functional $\bar{V}(t)$ is positive definite since $V(u(x, t))$ is positive definite for $u \in \mathbb{R}_+^n$. Property (i) is satisfied.

We compute $\dot{\bar{V}}(t)$ deleting arguments for simplicity of notation.

$$\dot{\bar{V}}(t) = \int_B \dot{V}\, dx$$

$$= \sum_{i=1}^{n} \int_B \frac{\partial V}{\partial u_i} u_{i_t}\, dx$$

$$= \sum_{i=1}^{n} \int_B \frac{\partial V}{\partial u_i} f_i(u)\, dx + \sum_{i=1}^{n} \int_B \frac{\partial V}{\partial u_i} \operatorname{div}(D_i \nabla u_i)dx$$

$$= I_1 + I_2 ,$$

where I_1 and I_2 denote the first and second summations, respectively. The summation $I_1 \leq 0$ if $\dot{V}$ is negative semi-definite and $I_1 < 0$ if $\dot{V}$ is negative definite. Apply Green's identity to I_2 .

$$I_2 = \sum_{i=1}^{n} \frac{\partial V}{\partial u_i} D_i \frac{\partial u_i}{\partial \eta} \Big|_{\partial B} - \sum_{i=1}^{n} \int_B D_i \nabla u_i \cdot \nabla(\frac{\partial V}{\partial u_i}) \, dx$$

$$= - \sum_{i=1}^{n} \int_B D_i \frac{\partial^2 V}{\partial u_i^2} |\nabla u_i|^2 \, dx ,$$

since $\frac{\partial^2 V}{\partial u_i \partial u_j} = 0$, $i \neq j$, and $\frac{\partial u_i}{\partial \eta} = 0$ or $D_i(x, t, u) = 0$ for $x \in \partial B$. The integrands in I_2 are nonnegative, hence the result follows, $\dot{\bar{V}} \leq 0 (< 0)$. /

The following theorem is a persistence result for two-species competition.

<u>THEOREM 4.12</u>. Assume a positive classical solution, $u_i(x, t)$, $i = 1, 2$, exists to the Neumann problem or homogeneous Dirichlet problem (4.5). (By a positive solution, we mean $u_i(x, t) > 0$, $x \in B$, $t \geq 0$) . If

$$\frac{a_{12}}{a_{22}} < \frac{a_{10}}{a_{20}} < \frac{a_{11}}{a_{21}} ,$$

then the system is persistent - i.e., $\limsup_{t\to\infty} \int_B u_i(x, t)dx > 0$, $i = 1, 2$.

<u>PROOF</u>. Consider the function

$$V(t) = a_{21}[u_1 - u_1^* - u_1^* \ln \frac{u_1}{u_1^*}] + a_{12}[u_2 - u_2^* - u_2^* \ln \frac{u_2}{u_2^*}] .$$

The function $V(t)$ is a Lyapunov function for Lotka-Volterra two-species competition, where $u_1^* = \frac{a_{10}a_{22} - a_{12}a_{20}}{a_{11}a_{22} - a_{12}a_{21}}$ and $u_2^* = \frac{a_{20}a_{11} - a_{10}a_{21}}{a_{11}a_{22} - a_{12}a_{21}}$

(Goh, 1977). Lemma 4.10 implies the functional $\bar{V}(t) = \int_B V(u(x, t))dx$ has properties (i) and (ii), since $\frac{\partial^2 V}{\partial u_i^2} > 0$ and $\frac{\partial^2 V}{\partial u_i \partial u_j} = 0$, $i \neq j$ on $\mathbb{R}_+^2$.

Suppose $\lim_{t\to\infty} \int_B u_i(x, t)dx = 0$ for some i . Lemma 4.8 implies $\lim_{t\to\infty} \int_B \ln u_i(x, t)dx = -\infty$. Thus $\lim_{t\to\infty} \bar{V}(t) = +\infty$, a contradiction to property (ii) in Lemma 4.10, $\dot{\bar{V}}(t) < 0$. The desired conclusion follows. /

Consider system (4.5) for $n = 1$, the logistic model,

$$
\begin{aligned}
& u_t = u[a_{10} - a_{11} u] + D \operatorname{div}(u\nabla u) \ ; \quad x \in \bar{B} \ , \quad t > 0 \ , \\
(4.13) \qquad & u(x, 0) = \phi(x) \ ; \quad x \in B \ , \\
& u = f(x, t) \ \text{ or } \ \frac{\partial u}{\partial \eta} = 0 \ ; \quad x \in \partial B \ , \quad t > 0 \ .
\end{aligned}
$$

The preceding theorems imply positive classical solutions are unique (Theorem 4.3), nonnegative classical solutions are bounded (Theorem 4.6), and nonnegative classical solutions to the Neumann problem or the homogeneous Dirichlet problem are weakly persistent (Theorem 4.4). Positivity of solutions can be shown for (4.13) in a similar manner to the logistic biased diffusion model.

<u>THEOREM 4.14</u>. Assume a classical solution exists to (4.13). If

(i) $\phi(x) > 0$, $x \in \bar{B}$,

and in addition for Dirichlet boundary conditions ,

(ii) $f(x, t) > 0$, $x \in \partial B$, $t \geq 0$,

then $u(x, t) > 0$.

PROOF. The proof is similar to the proof of Theorem 3.15. /

Positivity of solutions can be shown to hold true for more general equations, such as

$$u_t = f(u) + \alpha u \Delta u + \beta |\nabla u|^2 ,$$

where α and β are positive and $f(u) \geq 0$ for $0 < u < K$.

Theorem 4.14 implies finite time persistence, since $\int_B u(x, t)dx > 0$ for $0 < t < \infty$. The next question of interest is persistence in infinite time. The Neumann problem and homogeneous Dirichlet problem have persistent solutions.

THEOREM 4.15. Every positive classical solution, $u(x, t)$, to the Neumann problem or homogeneous Dirichlet problem (4.13) is persistent - i.e., $\limsup_{t\to\infty} \int_B u(x, t)dx > 0$.

PROOF. The function $V(t) = u - \frac{a_{10}}{a_{11}} - \frac{a_{10}}{a_{11}} \ln \frac{a_{11} u}{a_{10}}$ is a Lyapunov function for the logistic equation. Since $\frac{\partial^2 V}{\partial u^2} = \frac{a_{10}}{a_{11} u^2} > 0$, Lemma 4.10 implies $\overline{V}(t) = \int_B V(u(x, t))dx$ is positive and $\dot{\overline{V}}(t)$ is negative.

Suppose $\lim_{t\to\infty} \int_B u(x, t)dx = 0$, then Lemma 4.8 implies $\lim_{t\to\infty} \int_B \ln u(x, t)dx = -\infty$. Thus $\lim_{t\to\infty} \overline{V}(t) = +\infty$ contradicting $\dot{\overline{V}}(t) < 0$. Hence $\limsup_{t\to\infty} \int_B u(x, t)dx > 0$. /

Theorem 4.15 presents a contrasting result to the one for the random diffusion model. If the diffusion coefficient is sufficiently large, random diffusion causes system extinction for the homogeneous Dirichlet problem.

The remaining types of interactions we discuss are predation and mutualism. The predator-prey model is

$$\begin{aligned} u_{1_t} &= u_1[a_{10} - a_{12}\, u_2] + D_1 \operatorname{div}(u_1 \nabla u_1) \\ u_{2_t} &= u_2[-a_{20} + a_{21}\, u_1] + D_2 \operatorname{div}(u_2 \nabla u_2) \end{aligned} \; ; \quad x \in \overline{B}\,, \quad t > 0\,,$$

$$(4.16) \qquad u_i(x, 0) = \phi_i(x); \quad x \in B,$$

$$u_i = f_i(x, t) \quad \text{or} \quad \frac{\partial u_i}{\partial n} = 0 \; ; \quad x \in \partial B\,, \; t > 0$$

for $i = 1, 2$, where all the parameters are positive.

Positive solutions to (4.16) are unique (Theorem 4.3). We can show persistence for positive solutions.

<u>THEOREM 4.17</u>. Assume a positive classical solution, $u_i(x, t)$, $i = 1, 2$, exists to the Neumann problem and the homogeneous Dirichlet problem (4.16). Then every solution is persistent - i.e., $\limsup_{t\to\infty} \int_B u_i(x, t)dx > 0$, $i = 1, 2$.

<u>PROOF</u>. The function

$$(4.18) \qquad V(t) = a_{21}[u_1 - \frac{a_{20}}{a_{21}} - \frac{a_{20}}{a_{21}} \ln \frac{a_{21}\, u_1}{a_{20}}] + a_{12}[u_2 - \frac{a_{10}}{a_{12}} - \frac{a_{10}}{a_{12}} \ln \frac{a_{12}u_2}{a_{10}}]$$

is a Lyapunov function for the Lotka-Volterra predator-prey system. Since $\frac{\partial^2 V}{\partial u_i^2} > 0$, $i = 1, 2$ and $\frac{\partial^2 V}{\partial u_i \partial u_j} = 0$, $i \neq j$, Lemma 4.10 implies $\overline{V}(t) = \int_B V(u(x, t))dx$ is positive and $\dot{\overline{V}}(t)$ is nonpositive.

Suppose $\lim_{t\to\infty} \int_B u_i(x, t)dx = 0$ for some i. Lemma 4.8 implies $\lim_{t\to\infty} \int_B \ln u_i(x, t)dx = -\infty$. Thus $\lim_{t\to\infty} \overline{V}(t) = +\infty$, contradicting $\dot{\overline{V}}(t) \leq 0$. /

Density dependence included in the prey or predator equation still implies system persistence because of the existence of a Lyapunov function of the type (4.18).

Directed or biased diffusion are probably not biologically meaningful types of movement for predation, since they assume the predator and prey move independently. A more appropriate model is mentioned in the next section.

Consider the mutualistic systems with directed diffusion,

$$u_{i_t} = u_i[-a_{i0} + \sum_{\substack{j=1 \\ j\neq i}}^{n} a_{ij}\, u_j] + D_i \operatorname{div}(u_i \nabla u_i) \; ; \; x \in \overline{B} \, , \; t > 0 \, ,$$

$$(4.19) \qquad u_i(x, 0) = \phi_i(x) \; ; \quad x \in B \, ,$$

$$u_i = f_i(x, t) \quad \text{or} \quad \frac{\partial u_i}{\partial \eta} = 0 \; ; \quad x \in \partial B \, , \quad t > 0$$

for $i = 1,\ldots, n$ and

$$\begin{aligned} u_{1_t} &= u_1[a_{10} - a_{11}\, u_1 + a_{12}\, u_2] + D_1 \operatorname{div}(u_1 \nabla u_1) \\ u_{2_t} &= u_2[-a_{20} + a_{21}\, u_1] + D_2 \operatorname{div}(u_2 \nabla u_2) \end{aligned} \qquad ; \; x \in \overline{B} \, , \; t > 0 \, ,$$

$$(4.20) \qquad u_i(x, 0) = \phi_i(x) \; ; \quad x \in B,$$

$$u_i = f_i(x, t) \quad \text{or} \quad \frac{\partial u_i}{\partial \eta} = 0 \; ; \quad x \in \partial B \, , \; t > 0$$

for $i = 1, 2$ and where all parameters are positive.

Systems (4.19) and (4.20) behave similarly to the mutualistic systems without diffusion.

THEOREM 4.21. Assume a classical solution, $u(x, t) = [u_i(x, t)]$, exists to (4.19). If

(i) $\phi_i(x) > \max_{j \neq i} \{\frac{a_{j0}}{a_{ji}}\}$, $x \in \bar{B}$, $i = 1,\ldots, n$,

and in addition for Dirichlet boundary conditions,

(ii) $f_i(x, t) > \max_{j \neq i}\{\frac{a_{j0}}{a_{ji}}\}$, $x \in \partial B$, $0 \leq t \leq \infty$, $i = 1,\ldots, n$,

then $u_i(x, t) > \max_{j \neq i}\{\frac{a_{j0}}{a_{ji}}\}$, $i = 1,\ldots, n$.

PROOF. The proof is similar to the proof of Theorem 3.17. /

In fact if conditions (i) and (ii) hold, solutions satisfy inequality (3.18),

$$u_i(x, t) > \alpha_i > \max_{j \neq i}\{\frac{a_{j0}}{a_{ji}}\} .$$

Using the above inequality it is easy to show that solutions to (4.19) become unbounded.

COROLLARY 4.22. Assume a classical solution, $u(x, t) = [u_i(x, t)]$, exists to the Neumann problem (4.19) and hypothesis (i) holds in Theorem 4.21. Then $\lim_{t \to \infty} \int_B u_i(x, t)dx = +\infty$, $i = 1,\ldots, n$.

PROOF. Integrate the differential equation over the domain B and apply the Divergence Theorem,

$$\frac{d}{dt} \int_B u_i dx = -a_{i0} \int_B u_i dx + \sum_{\substack{j=1 \\ j \neq i}}^{n} a_{ij} \int_B u_i u_j \, dx$$

$$\frac{d}{dt} \int_B u_i \, dx > [-a_{i0} + \sum_{\substack{j=1 \\ j \neq i}}^{n} a_{ij} \alpha_j] \int_B u_i \, dx \geq \varepsilon \int_B u_i \, dx$$

where $\varepsilon > 0$. The inequality

$$\frac{d}{dt} \int_B u_i \, dx > \varepsilon \int_B u_i \, dx ,$$

implies $\lim_{t \to \infty} \int u_i(x, t) dx = \infty$. /

The following theorem shows that the solutions to the Neumann problem and homogeneous Dirichlet problem (4.19) are of extinction type.

<u>THEOREM 4.23</u>. Assume a positive classical solution, $u(x, t) = [u_i(x, t)]$, exists to (4.19) for the Neumann problem with $B \subseteq \mathbb{R}$ and for the homogeneous Dirichlet problem. If

$$\phi_i(x) < \beta_i < \frac{1}{n-1} \min_{j \neq i} \{\frac{a_{j0}}{a_{ji}}\} , \quad x \in \overline{B} , \quad i = 1, \ldots, n ,$$

then system (4.19) is of extinction type - i.e., $\lim_{t \to \infty} \int_B u(x, t) dx = 0$.

<u>PROOF</u>. The proof follows in a similar manner to the proofs of Theorem 3.19 and 3.20. /

Similar statements can be proved about system (4.20) as was done for the corresponding biased diffusion system in Theorem 3.22. The system (4.20) for the Neumann problem with $B \subseteq \mathbb{R}$ and homogeneous Dirichlet problem is of extinction type provided the initial conditions are sufficiently small and $\frac{a_{10}}{a_{11}} < \frac{a_{20}}{a_{21}}$. As a consequence of the

results in Theorem 3.22 (a) and (b) we can show solutions to the Neumann problem (4.20) become unbounded.

COROLLARY 4.24. Assume a classical solution, $u_i(x, t)$, $i = 1, 2$, exists to the Neumann problem (4.20). If

(i) $\phi_1(x) > \dfrac{a_{20}}{a_{21}}$ and $\phi_2(x) > 0$, $x \in \overline{B}$

and

(ii) $\dfrac{a_{10}}{a_{11}} > \dfrac{a_{20}}{a_{21}}$,

or if

(iii) $\phi_1(x) > \dfrac{a_{20}}{a_{21}}$ and $\phi_2(x) > \dfrac{a_{11}a_{20} - a_{10}a_{21}}{a_{12}\, a_{21}}$, $x \in \overline{B}$

and

(iv) $\dfrac{a_{10}}{a_{11}} < \dfrac{a_{20}}{a_{21}}$,

hold, then $\lim\limits_{t\to\infty} \int_B u_2(x, t)dx = \infty$ and $\limsup\limits_{t\to\infty} \|u_1(\cdot, t)\|_\infty = \infty$.

PROOF. If (i) and (ii) hold, it can be shown in a manner similar to the proof of Theorem 3.17 that

$$u_1(x, t) > \alpha_1 > \frac{a_{20}}{a_{21}} \quad \text{and} \quad u_2(x, t) > \alpha_2 > 0 .$$

Integrate the differential equation for u_2 in (4.20) over the domain B and apply the Divergence Theorem,

$$\frac{d}{dt}\int_B u_2\, dx = -a_{20}\int_B u_2\, dx + a_{21}\int_B u_1u_2\, dx$$

$$> [-a_{20} + a_{21}\,\alpha_1]\int_B u_2dx = \varepsilon\int_B u_2\, dx$$

where $\varepsilon > 0$. The inequality

$$\frac{d}{dt}\int_B u_2\, dx > \varepsilon \int_B u_2\, dx$$

implies $\lim_{t\to\infty} \int_B u_2(x, t)dx = \infty$. Do the same for the differential equation of u_1 ,

$$\frac{d}{dt}\int_B u_1\, dx = a_{10}\int_B u_1\, dx - a_{11}\int_B u_1^2\, dx + a_{12}\int_B u_1 u_2\, dx$$

$$\geq [a_{10} - a_{11}\|u_1(\cdot, t)\|_\infty]\int_B u_1\, dx + a_{12}\,\alpha_1\int_B u_2 dx .$$

If $\|u_1(\cdot, t)\|_\infty \leq M < \infty$, then

$$\frac{d}{dt}\int_B u_1\, dx \geq [a_{10} - a_{11}\, M]\int_B u_1\, dx + a_{12}\,\alpha_1\int_B u_2 dx$$

$$> K + a_{12}\,\alpha_1\int_B u_2\, dx$$

where $K = \begin{cases} [a_{10} - a_{11}\, M]\, M\int_B dx \ , \text{ if } a_{10} - a_{11}\, M < 0 \ , \\ 0 \ , \text{ if } a_{10} - a_{11}\, M \geq 0 \ . \end{cases}$ The constant K is nonpositive.

Choose T such that for $t \geq T$, $\int_B u_2\, dx > \frac{-2K + 1}{a_{12}\,\alpha_1}$. For $t \geq T$, we have

$$\frac{d}{dt}\int_B u_1\, dx > -K + 1 > 0 .$$

The last inequality implies $\lim_{t\to\infty} \int_B u_1 dx = \infty$, a contradiction to $\|u_1(\cdot, t)\|_\infty < \infty$. Hence the desired conclusion follows.

In a similar manner it can be shown that the theorem follows if (iii) and (iv) hold. /

Mutualistic systems (4.19) and (4.20) exhibit the same type of behavior as the corresponding systems without diffusion. There exist initial conditions which give rise to unbounded solutions and there exist initial conditions which imply system extinction.

We have shown that there exist persistence criteria for directed diffusion models of competition and predation. However the mutualistic system (4.19) is of extinction type independent of any assumptions on the values of the parameters. Hence no persistence criteria exist for (4.19).

This concludes the analysis for the directed diffusion models. Many of the results here are analogous to the results for the spatially homogeneous Lotka-Volterra models. Of the directed diffusion models discussed, the persistence and extinction behavior of the logistic model is the one most completely determined. Its behavior is discussed in Chapter V, where its numerical solutions are calculated.

5. Predator-Prey Diffusion

A spatial model appropriate to a predator-prey system was formulated in Chapter II. Predators chase the prey and the prey flee from the predators. The initial boundary value problem is

$$\left.\begin{aligned} u_{1_t} &= u_1[a_{10} - a_{12}\, u_2] + D_1 \operatorname{div}(u_1 \nabla u_2) \\ u_{2_t} &= u_2[-a_{20} + a_{21}\, u_1] - D_2 \operatorname{div}(u_2 \nabla u_1) \end{aligned}\right. \quad ; \quad x \in \bar{B}\ ,\ t > 0\ ,$$

$$(5.1) \qquad u_i(x, 0) = \phi_i(x)\ ;\ \ x \in B\ ,$$

$$u_i = f_i(x, t) \quad \text{or} \quad \frac{\partial u_i}{\partial n} = 0\ ;\ \ x \in \partial B\ ,\ \ t > 0$$

for $i = 1, 2$ and where the parameters are positive.

For model (5.1) there exists a weak component persistence result similar to Theorem 4.4.

<u>THEOREM 5.2</u>. Assume a nonnegative classical solution, $u_i(x, t)$, $i = 1, 2$, exists to the Neumann problem and the homogeneous Dirichlet problem (5.1). Then either $\limsup_{t\to\infty} \|u_2(\cdot, t)\|_\infty > 0$ or $\limsup_{t\to\infty} \int_B u_1(x, t)dx > 0$.

<u>PROOF</u>. Assume the conclusion is false, $\lim_{t\to\infty} \|u_2(\cdot, t)\|_\infty = 0$ and $\lim_{t\to\infty} \int_B u_1(x, t)dx = 0$. Integrate the differential equation for u_1 over the domain B and apply the Divergence Theorem,

$$\frac{d}{dt}\int_B u_1 dx = a_{10}\int_B u_1 dx - a_{12}\int_B u_1\, u_2\, dx\ .$$

Choose T such that $t \geq T$ implies $\|u_2(\cdot, t)\|_\infty < \dfrac{a_{10}}{2a_{12}}$. For $t \geq T$

$$\frac{d}{dt}\int_B u_1 dx \geq \frac{a_{10}}{2}\int_B u_1\, dx\ .$$

Thus $\lim_{t\to\infty} \int_B u_1 dx = \infty$ which contradicts the original assumption.

The conclusion of the theorem follows. /

Theorem 5.2 implies either the predators are weakly persistent or the prey are persistent. System (5.1) is more difficult to analyze due to the interactive nonlinear diffusion terms and hence the results are slim.

This concludes the analysis for the continuous models. In Chapter V, the persistence and extinction results for both the patch and continuous models are discussed.

CHAPTER V

DISCUSSION

The results for the patch and continuous models presented in the foregoing chapters are varied and numerous. In this concluding chapter, the most interesting behavior exhibited by these models is discussed. We will compare and contrast solution behavior for a patch versus a continuous model and a random versus a biased or a directed diffusion model. Some of the results are illustrated by comparing numerical solutions to the continuous logistic model.

One important consequence of the patch random diffusion models is the possibility of extinction behavior for both competition (Theorem 2.10, Chapter III) and predation (Theorem 2.23, Chapter III). Extinction is due to the "openness" of the system. More individual members of the patches move out of the patches into the surrounding pool than return. Ultimately the patches become empty. Complete extinction cannot occur in Lotka-Volterra predation or competition, however the same system with random diffusion can lead to extinction.

A more surprising result is the possibility of predator survival without the prey (Theorem 2.25, Chapter III). In this case predator survival is due to an influx of predators from the surrounding pool which replenishes the supply of predators dying out because of lack of prey.

The above examples have shown that spatial heterogeneity can increase the possibility of extinction. DeAngelis, Travis, and

Post (1979) gave an alternative interpretation to the logistic two-patch model. Using their interpretation, the opposite conclusion is obtained. Spatial heterogeneity increases the likelihood of persistence. Consider the negative logistic equation,

$$\dot{u}^i = u^i[\bar{a}_{i0} - a_{ii}\, u^i] ,$$

where $\bar{a}_{i0} < 0$ and $a_{ii} > 0$. If diffusion is added, then

$$\dot{u}^i = u^i[\bar{a}_{i0} - a_{ii}\, u^i] + D^{ij}\, u^j , \quad i \neq j , \quad i, j = 1, 2 .$$

Corollary 2.20 (Chapter III) implies system persistence provided $D^{12}\, D^{21} - \bar{a}_{10}\, \bar{a}_{20} > 0$. A species destined for extinction persists due to the mutualistic action of random diffusion.

The mutualistic random diffusion patch model is an example of a system where spatial heterogeneity increases persistence of the system. Without diffusion the system is of extinction type, but with diffusion there exist sufficient conditions which imply the system is strongly persistent (Theorem 2.32, Chapter III).

There are many propositions and theorems, which give sufficient conditions for weak and strong persistence for the patch random diffusion models. The extensive research on the continuous random diffusion models has also established sufficient conditions for persistence or extinction. A summary of the persistence and extinction results for the Lotka-Volterra random diffusion models is given in Table 1.

TABLE 1

PERSISTENCE AND EXTINCTION IN RANDOM DIFFUSION MODELS

Type	Model	Persistence					Extinction	
		WCP	CP	WP	SP	P	CE	E
Patch	Competition		+	+	+	+	+	+
	Predation		+	+		+	+	+
	Mutualism		+	+	+	+	+	+
Continuous	Competition	+	+	+	+	+	+	
							+	+
	Predation	+	+	+	+	+	0	0
							+*	+*
	Mutualism	0	0	0	0	0	+	+
		0	0	0	0	0	+	+

*with density dependence.

The various types of persistence and extinction given in Table 1 have the following interpretations:

WCP ≡ weak component persistence

CP ≡ component persistence

WP ≡ weak persistence

SP ≡ strong persistence

P ≡ system persistence

CE ≡ component extinction

E ≡ system extinction.

A plus, + , by a model implies that there exist sufficient conditions for the indicated persistence or extinction. A zero, 0 , by a model implies that there do not exist sufficient conditions for the indicated persistence or extinction. For the continuous

models, the upper half of the box is for the Neumann problem and the lower half of the box is for the homogeneous Dirichlet problem. Table 1 indicates that there exist sufficient conditions which imply almost all of the types of persistence and extinction for competition and predation, except in the continuous case with homogeneous Dirichlet boundary conditions. However the continuous obligate mutualistic system is of extinction type, since no criteria exist which imply persistence.

The patch biased diffusion model does not have such an adverse effect on the system as random diffusion for a competitive or predator-prey system. Complete extinction is not possible for competition or predation; a species survives in each patch (Proposition 3.3, Chapter III). Similarly in the patch directed diffusion models, complete extinction cannot occur for competition or predation (Proposition 4.3, Chapter III). However the obligate mutualistic system with either biased or directed diffusion is of extinction type (Theorems 3.33 and 4.24, Chapter III). In the continuous models, the Neumann problem and homogeneous Dirichlet problem with directed diffusion for competition and predation have a weakly persistent component (Theorem 4.4, Chapter IV). Competition and predation for the directed diffusion system with Neumann or homogeneous Dirichlet boundary conditions represent persistent systems provided their homogeneous equilibria are stable (Theorems 4.12, 4.17, Chapter IV). The obligate mutualistic system, however, is not persistent (Theorems 3.20, 4.23, Chapter IV). A summary of the persistence and extinction results for both biased and directed diffusion is given in Tables 2 and 3.

TABLE 2

PERSISTENCE AND EXTINCTION IN BIASED DIFFUSION MODELS

Type	Model	Persistence					Extinction	
		WCP	CP	WP	SP	P	CE	E
Patch	Competition		+					0
	Predation		+					0
	Mutualism		0	0	0	0	+	+
Continuous	Competition							
	Predation							
	Mutualism		0		0	0	+	+
			0		0	0	+	+

TABLE 3

PERSISTENCE AND EXTINCTION IN DIRECTED DIFFUSION MODELS

Type	Model	Persistence					Extinction	
		WCP	CP	WP	SP	P	CE	E
Patch	Competition		+	+	+	+		0
	Predation		+	+		+		0
	Mutualism		0	0	0	0	+	+
Continuous	Competition	+	+	+		+		
		+	+	+		+		
	Predation	+	+	+		+	0	0
		+	+	+		+	0	0
	Mutualism		0		0	0	+	+
			0		0	0	+	+

In Chapter III we discussed a patch predator-prey model in which the prey flees from the predator and the predator chases the prey. In contrast to the random diffusion model, the prey always persist (Theorem 5.3, Chapter III). The number of prey leaving the patches decreases when they sense their number is small in the patches. In random diffusion this "sensing" does not occur. For this particular system, persistence can be determined by one parameter (Theorem 5.5, Chapter III). In the continuous analogue of the predator-prey patch model it was shown that the system has a weakly persistent component (Theorem 5.2, Chapter IV). Table 4 summarizes the persistence and extinction results for predator-prey diffusion.

TABLE 4

PERSISTENCE AND EXTINCTION IN PREDATOR-PREY DIFFUSION MODELS

Type	Persistence					Extinction	
	WCP	CP	WP	SP	P	CE	E
Patch		+	+		+		0
Continuous	+						
	+						

The significance of the type of diffusion becomes apparent in the logistic population. Consider the patch models first. A logistic population with biased or directed diffusion can have unbounded solutions (Theorems 3.16 and 4.9 , Chapter III). Biased or directed diffusion causes an undiffused asymptotically stable system to exhibit unbounded growth. A logistic population with random diffusion

has bounded solutions (Theorem 2.5, Chapter III). Whereas in the random diffusion model extinction can occur (Theorem 2.19, Chapter III), a biased or directed diffusion model represents a strongly persistent system (Theorems 3.15 and 4.8, Chapter III).

In the continuous models of the logistic population, we found that the Neumann problem and the homogeneous Dirichlet problem with directed diffusion are persistent systems (Theorem 4.15, Chapter IV). Similarly the Neumann problem with random diffusion is a persistent system. However the homogeneous Dirichlet problem with random diffusion (Fisher's equation) can give rise to extinction, provided the diffusion coefficient is sufficiently large. Regardless of the magnitude of the diffusion coefficient, solutions to the directed diffusion model persist, unlike the random diffusion model. Table 5 summarizes the results for the logistic model with diffusion.

TABLE 5

PERSISTENCE AND EXTINCTION IN THE LOGISTIC MODEL WITH DIFFUSION

Type	Diffusion	Persistence			Extinction
		WP	SP	P	E
Patch	Random	+	+	+	+
	Biased	+	+	+	0
	Directed	+	+	+	0
Continuous	Random	+	+	+	0
					+
	Biased				
	Directed	+		+	0
		+		+	0

Numerical solutions for the logistic equation with random, biased, and directed diffusion, equations (1)-(3), were computed for the homogeneous Dirichlet problem. A finite difference scheme was used with $\Delta t = .004$ and $\Delta x = .1$.

$$
(1) \qquad \begin{aligned} & u_t = u[1 - u] + u_{xx} \; ; \quad 0 \le x \le 1 \; , \quad t > 0 \; , \\ & u(x, 0) = u_0(x) \; ; \quad 0 < x < 1 \; , \\ & u(0, t) = 0 = u(1, t) \; ; \quad t > 0 \; . \end{aligned}
$$

$$
(2) \qquad \begin{aligned} & v_t = v[1 - v] + vv_{xx} \; ; \quad 0 \le x \le 1 \; , \quad t > 0 \; , \\ & v(x, 0) = v_0(x) \; ; \quad 0 < x < 1 \; , \\ & v(0, t) = 0 = v(1, t) \; ; \quad t > 0 \; . \end{aligned}
$$

$$
(3) \qquad \begin{aligned} & w_t = w[1 - w] + (ww_x)_x \; ; \quad 0 \le x \le 1 \; , \quad t > 0 \; , \\ & w(x, 0) = w_0(x) \; ; \quad 0 < x < 1 \; , \\ & w(0, t) = 0 = w(1, t) \; ; \quad t > 0 \; . \end{aligned}
$$

For any of the initial conditions given in Figure 7, the random diffusion solution, u , tended to zero. This will always occur for the random diffusion model (1) due to the choice of parameters. Leung (1980) showed that if

$$
(4) \qquad a_{10} < D\lambda_1 ,
$$

then the solution to the problem,

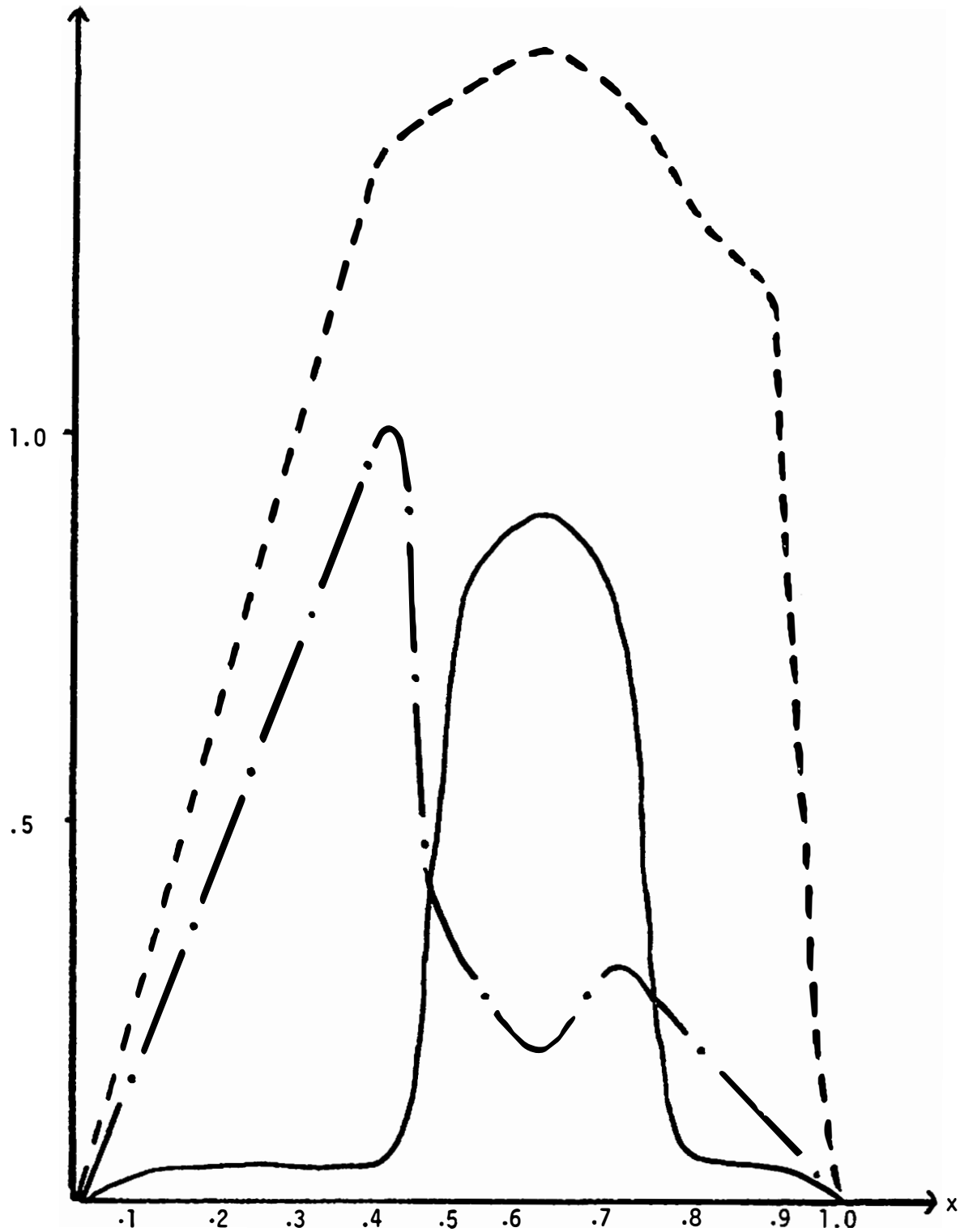

FIGURE 7

Initial conditions for the homogeneous Dirichlet problems (1) - (3).

$$u_t = u(a_{10} - a_{11}\, u) + D\, u_{xx}\ ,\ 0 \le x \le 1\ ,\ t > 0\ ,$$
$$u(x,\, 0) = u_0(x),\quad 0 < x < 1\ ,$$
$$u(0,\, t) = 0 = u(1,\, t)\ ,\ t > 0\ ,$$

tends to zero. The parameter λ_1 is the principal eigenvalue of the problem,

$$\frac{d^2U}{dx^2} + \lambda U = 0$$

$$U(0) = 0 = U(1)\ ,$$

which is given by $\lambda_1 = \pi^2$. Hence in our case $a_{10} = 1$, $D = 1$ and $\lambda_1 = \pi^2$ and inequality (4) holds. For the same initial conditions, both the biased and directed diffusion solutions, v and w, tended to heterogeneous equilibrium solutions (Figure 8). The equilibrium solution to equation (2) is easy to calculate. The equilibrium, $V(x)$, satisfies the boundary value problem,

$$V''(x) - V(x) = -1$$
$$V(0) = 0 = V(1)\ ,$$

and the solution is given by the equation

$$V(x) = \left[\frac{e^2 - e}{1 - e^2}\right] e^{-x} + \left[\frac{e - 1}{1 - e^2}\right] e^{x} + 1\ .$$

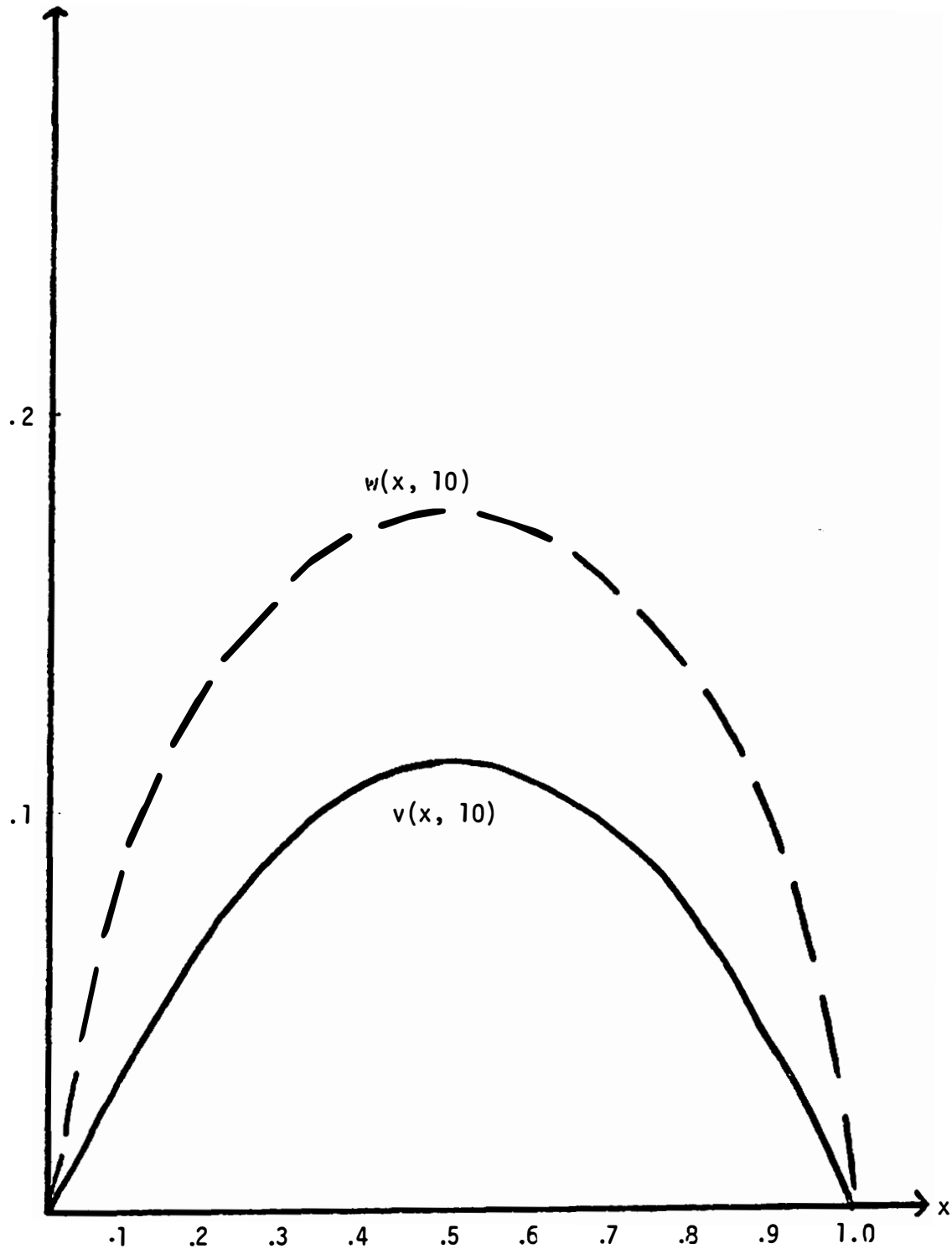

FIGURE 8

Equilibrium solutions to systems (2) and (3).

Analytically we proved that the solution, w, to equation (3) is persistent (Theorem 4.15, Chapter IV). Numerical work indicates that this is also the case for equation (2).

We can determine in part the effect that different types of diffusion might have on a reaction system by comparing the average values of the pure diffusion systems, without the reaction mechanism. This is done in the next proposition.

PROPOSITION 5.

(i) Let u, v, and w be nonnegative solutions to the initial boundary value problems given below:

$$\begin{aligned} &u_t = D_1 \Delta u \ ; \quad x \in \bar{B}, \quad t > 0, \\ &u(x, 0) = u_0(x) \ ; \quad x \in B, \\ &\frac{\partial u}{\partial n} = 0 \ ; \quad x \in \partial B, \ t > 0, \end{aligned} \qquad \begin{aligned} &v_t = D_2 \, v\Delta v \ ; \ x \in \bar{B}, \ t > 0, \\ &v(x, 0) = v_0(x) \ ; \ x \in B, \\ &\frac{\partial v}{\partial n} = 0 \ ; \ x \in \partial B, \ t > 0, \end{aligned}$$

$$\begin{aligned} &w_t = D_3 \operatorname{div}(w\nabla w) \ ; \quad x \in \bar{B}, \ t > 0, \\ &w(x, 0) = w_0(x) \ ; \quad x \in B, \\ &\frac{\partial w}{\partial n} = 0 \ ; \quad x \in \partial B, \quad t > 0. \end{aligned}$$

Then $\int_B [u(x, t) - v(x, t)]dx \geq \int_B [u_0(x) - v_0(x)]dx$ and $\int_B [w(x, t) - v(x, t)]dx \geq \int_B [w_0(x) - v_0(x)]dx$.

(ii) Let u, v, and w be nonnegative solutions to the initial boundary value problems given below:

$$u_t = D_1 \Delta u \; ; \quad x \in \overline{B} \; , \; t > 0 \; , \quad v_t = D_2 \, v\Delta v; \; x \in \overline{B} \; , \; t > 0 \; ,$$
$$u(x, 0) = u_0(x) \; ; \quad x \in B, \qquad v(x, 0) = v_0(x) \; ; \quad x \in B \; ,$$
$$u = 0 \; ; \quad x \in \partial B \; , \quad t > 0 \; , \qquad v = 0 \; ; \quad x \in \partial B \; , \; t > 0 \; ,$$

$$w_t = D_3 \, \mathrm{div}(w\nabla w) \; ; \quad x \in \overline{B} \; , \quad t > 0 \; ,$$
$$w(x, 0) = w_0(x) \; ; \; x \in B \; ,$$
$$w = 0 \; ; \quad x \in \partial B \; , \quad t > 0 \; .$$

Then $\int_B [w(x, t) - v(x, t)]dx \geq \int_B [w_0(x) - v_0(x)]dx$ and $\int_B [w(x, t) - u(x, t)]dx \geq \int_B [w_0(x) - u_0(x)]dx$.

<u>PROOF</u>. The proof of (i) is an easy consequence of Green's identity.

$$\frac{d}{dt} \int_B [u(x, t) - v(x, t)]dx = \int_B [D_1 \Delta u - D_2 \, v\Delta v]dx$$
$$= D_1 \frac{\partial u}{\partial n} \Big|_{\partial B} - D_2 v \frac{\partial v}{\partial n}\Big|_{\partial B} + D_2 \int |\nabla v|^2 dx.$$

Thus

$$\frac{d}{dt} \int_B [u(x, t) - v(x, t)]dx \geq 0$$

which implies

$$\int_B [u(x, t) - v(x, t)]dx \geq \int_B [u_0(x) - v_0(x)]dx \; .$$

Similarly it follows that

$$\int_B [w(x, t) - v(x, t)]\, dx \geq \int_B [w_0(x) - v_0(x)]dx \ .$$

Part (ii) follows by applying Green's identities also. /

For the homogeneous Dirichlet problem the numerical results agree with the proposition. Figure 8 shows that the average value for w , the solution to the logistic directed diffusion model, dominates that of u or v. The above results are also illustrated by calculating the numerical solutions to the Neumann problems,

$$\begin{aligned} &u_t = u[1 - u] + u_{xx} \ ; \quad 0 \leq x \leq 1 \ , \quad t > 0 \ , \\ (6) \qquad &u(x, 0) = u_0(x) \ ; \quad 0 < x < 1 \ , \\ &u_x(0, t) = 0 = u_x(1, t) \ ; \quad t > 0 \ , \end{aligned}$$

$$\begin{aligned} &v_t = v[1 - v] + vv_{xx} \ ; \ 0 \leq x \leq 1 \ , \quad t > 0 \ , \\ (7) \qquad &v(x, 0) = v_0(x) \ ; \quad 0 < x < 1 \ , \\ &v_x(0, t) = 0 = v_x(1, t) \ ; \quad t > 0 \ , \end{aligned}$$

$$\begin{aligned} &w_t = w[1 - w] + (ww_x)_x \ ; \quad 0 \leq x \leq 1 \ , \quad t > 0 \ , \\ (8) \qquad &w(x, 0) = w_0(x) \ ; \quad 0 < x < 1 \ , \\ &w_x(0, t) = 0 = w_x(1, t) \ ; \quad t > 0 \ . \end{aligned}$$

For initial conditions below the equilibrium value of one (Figure 9), above the equilibrium value (Figure 10), and mixed, above and below the equilibrium value (Figure 11), all solutions to (6) - (8) approach

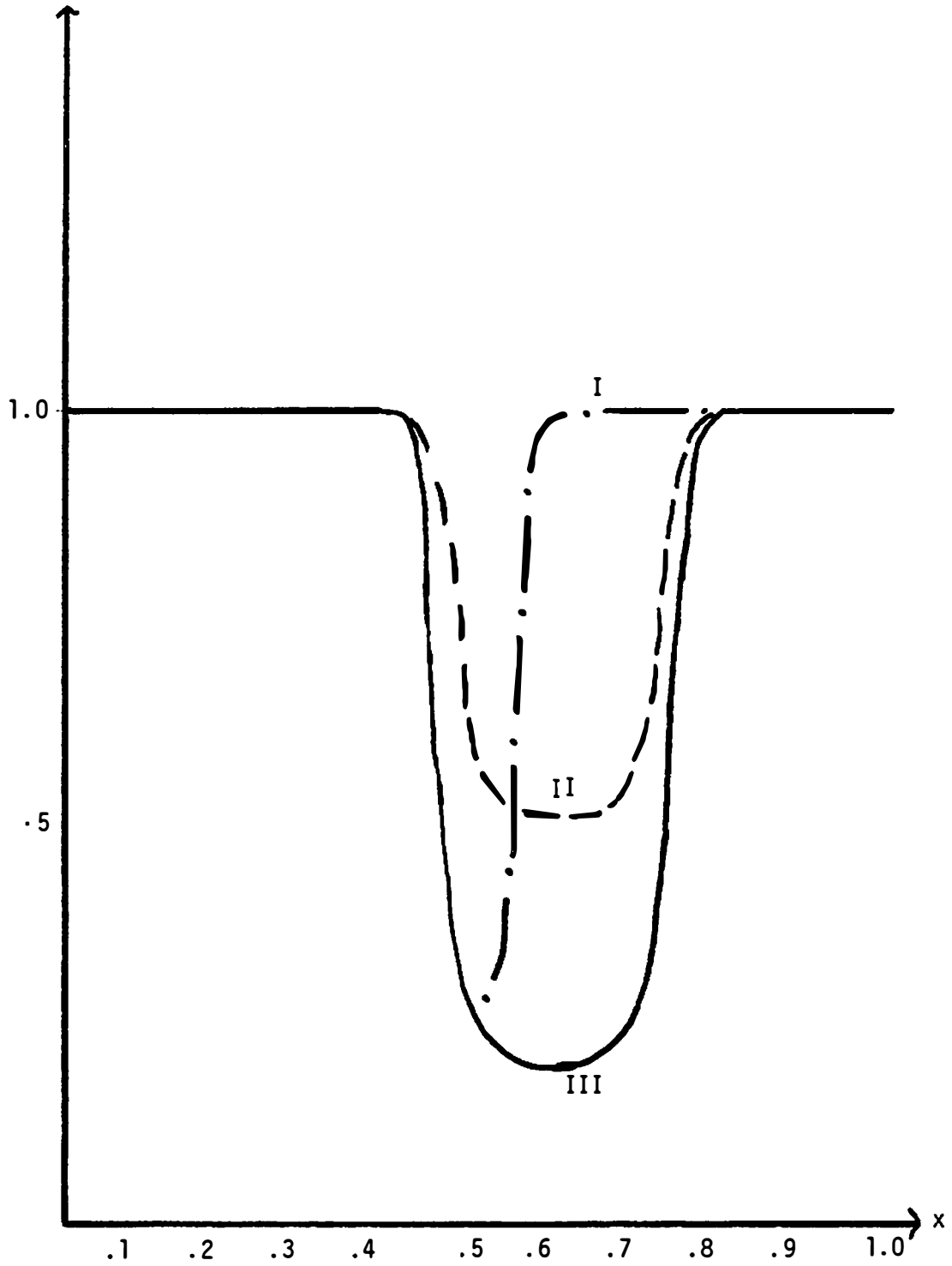

FIGURE 9

Initial conditions I - VI.

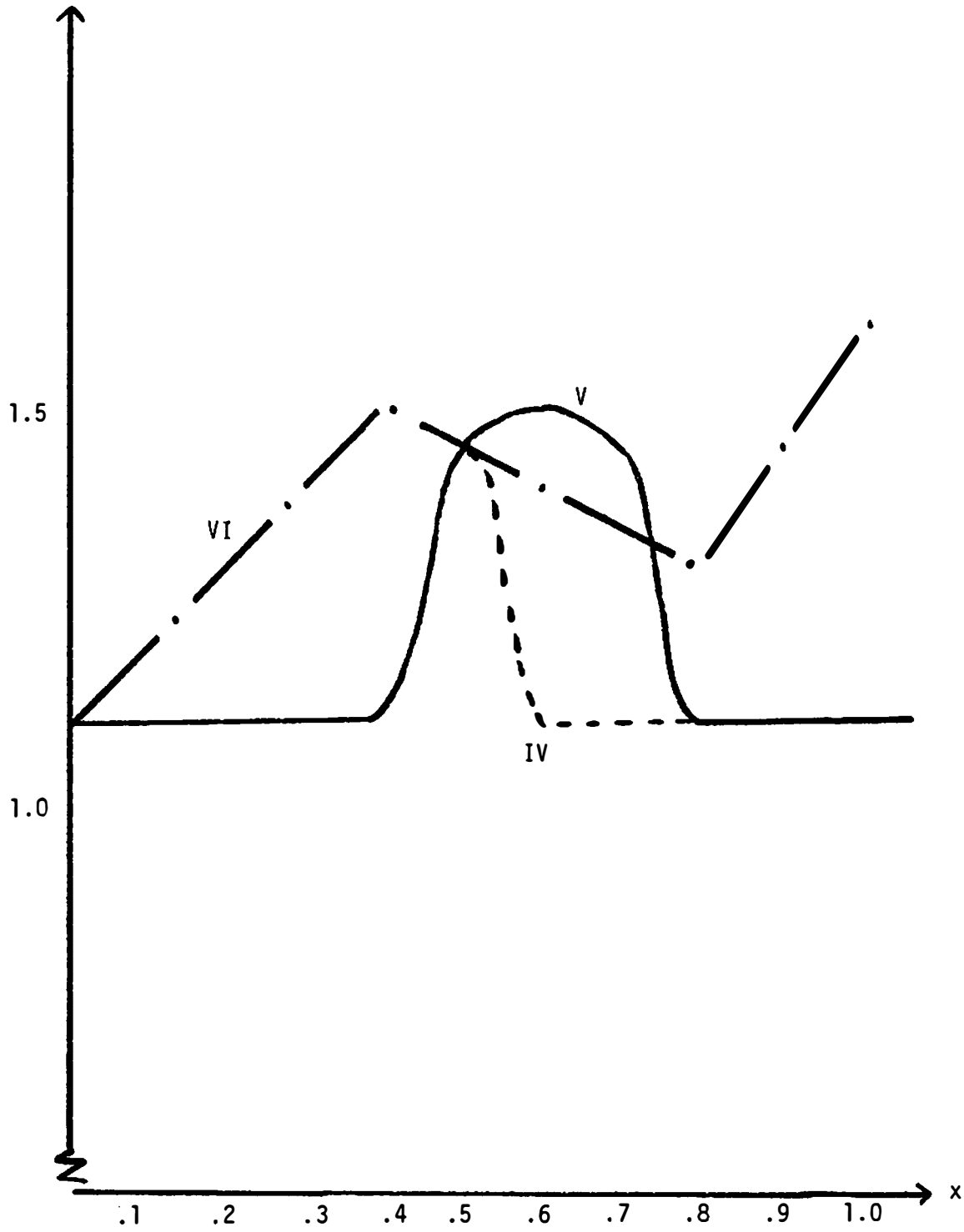

FIGURE 10

Initial conditions IV, V, VI.

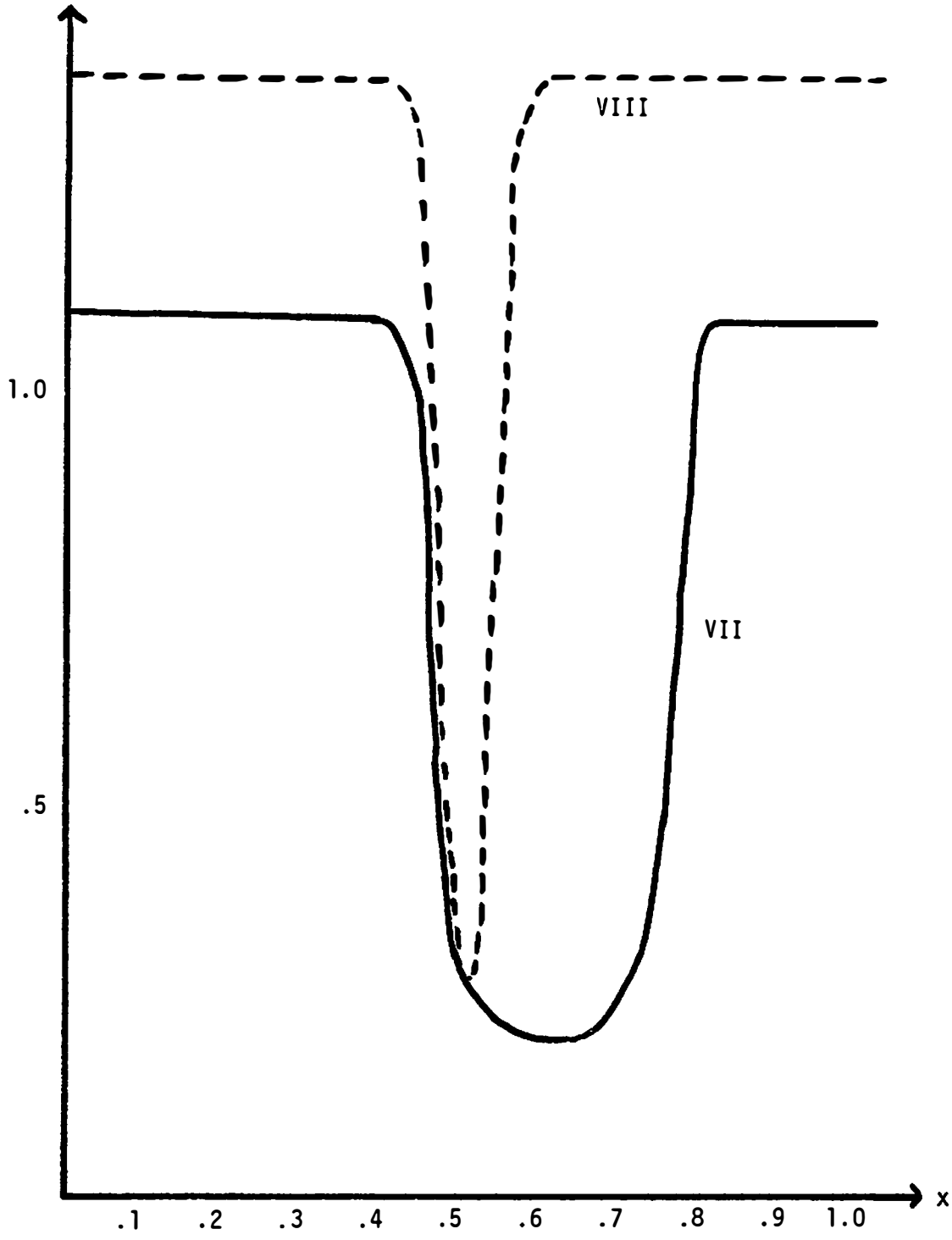

FIGURE 11
Initial conditions VII and VIII.

the equilibrium value one. Solutions become spatially homogeneous for large time. After 250 time steps with $\Delta t = .004$, the solutions are nearly homogeneous or constant. The solutions to (6) - (8) are given in Table 6 for the eight specified initial conditions.

TABLE 6

SOLUTIONS TO (6) - (8) FOR INITIAL CONDITIONS I - VIII

Initial Conditions \ Solutions	u(x, 1.) (Random)	v(x, 1.) (Biased)	w(x, 1.) (Directed)
I	.9709	.9358	.9592
II	.9433	.9254	.9385
III	.9003	.819	.881
IV	1.0456	1.0386	1.0389
V	1.0679	1.0583	1.0604
VI	1.1099	1.0568	1.0531
VII	.9337	.842	.9120
VIII	1.0884	1.0276	1.05586

Since solutions converge to the equilibrium value one, Proposition 5 indicates that the biased diffusion solution should be furthest from the equilibrium if solutions start below one (initial conditions I - III). If solutions start above one (initial conditions IV - VI), then the biased diffusion solution should be closest to one. This is indeed the case as exemplified in Table 6, except for initial condition VI. In terms of convergence to equilibrium, the biased diffusion model converges the slowest of the three models for small initial conditions and the fastest for large initial conditions.

The presence of directed or biased diffusion in a system tends to make the system more persistent. Directed motion or biased motion by themselves are more realistic types of transport mechanisms than random diffusion for many biological populations. Probably a combination of all three motions occurs most often in ecological systems.

We have discussed only four types of diffusion mechanisms. There exist many other ways of formulating movement across space. For example, an interactive type discussed by Mimura and Kawasaki (1980) is called cross diffusion. It is described by the partial differential equation,

$$u_{1_t} = \Delta(u_1 \, u_2) \; .$$

In addition to considering various types of diffusion mechanisms, various types of reaction mechanisms need to be considered. Lotka-Volterra dynamics are a simple first approximation. In the predator-prey models we have made some generalizations by assuming a satiation effect for the predators. Probably some of the same persistence results hold for more general models.

This paper constitutes a beginning in the study of persistence and extinction in spatially heterogeneous systems. The results of this study have indicated that persistence and extinction can be affected both positively and negatively by spatial heterogeneity considerations.

LIST OF REFERENCES

LIST OF REFERENCES

Apostol, T.M. 1975. Mathematical Analysis, second edition. Addison-Wesley Pub. Co., Reading, Massachusetts.

Berg, P.W. and J.L. McGregor. 1966. Elementary Partial Differential Equations. Clarendon Press, Oxford.

Brown, P.N. 1980. Decay to uniform states in ecological interactions. SIAM J. Appl. Math. 38: 22 - 37.

Coddington, E.A. and N. Levinson. 1955. Theory of Ordinary Differential Equations. McGraw-Hill, New York.

Conway, E.D., D. Hoff, and J.A. Smoller. 1978. Large time behavior of solutions of systems of nonlinear reaction-diffusion equations. SIAM J. Appl. Math. 35: 1 - 16.

Conway, E.D. and J.A. Smoller. 1977. Diffusion and the classical ecological interactions: asymptotics. In: W.E. Fitzgibbon (III) and H.F. Walker (eds.), Nonlinear Diffusion, pp. 53 - 69. Proc. of NSF-CBMS Regional Conference on Nonlinear Diffusion, Research Notes in Math., Pitman Pub. Limited, London.

Corduneanu, C. 1977. Principles of Differential and Integral Equations. Chelsea Pub. Co., New York.

DeAngelis, D.L., C.C. Travis, and W.M. Post. 1979. Persistence and stability of seed-dispersed species in a patchy environment. Theor. Pop. Biol. 16: 107 - 125.

Fife, P.C. 1979. Mathematical Aspects of Reacting and Diffusing Systems. Springer-Verlag, Berlin and New York.

Fisher, R.A. 1937. The wave of advance of advantageous genes. Ann. Eugen. London. 7: 355 - 369.

Freedman, H.I. and P. Waltman. 1977. Mathematical analysis of some three species food chain models. Math. Biosci. 33: 257 - 276.

Gard, T.C. and T.G. Hallam. 1979. Persistence in food webs: I. Lotka-Volterra food chains. Bull. Math. Biol. 41: 877 - 891.

Gilbarg, D. and N.S. Trudinger. 1977. Elliptic Partial Differential Equations of Second Order. Springer-Verlag, Berlin and New York.

Goh, B.S. 1977. Global stability in many-species systems. Amer. Natur. 111: 135 - 143.

Gopalsamy, K. 1977. Competition and coexistence in spatially heterogeneous environments. Math. Biosci. 36: 229 - 242.

Gurney, W.S.C. and R.M. Nisbet. 1975. The regulation of inhomogeneous populations. J. Theor. Biol. 52: 441 - 457.

Gurtin, M.E. and R.C. MacCamy. 1977. On the diffusion of biological populations. Math. Biosci. 33: 35 - 49.

Hallam, T.G. 1980. Effects of cooperation on competitive systems. J. Theor. Biol. 82: 415 - 423.

Hallam, T.G., L.J. Svoboda, and T.C. Gard. 1979. Persistence and extinction in three species Lotka-Volterra competitive systems. Math. Biosci. 46: 117 - 124.

Hastings, A. 1978. Global stability in Lotka-Volterra systems with diffusion. J. Math. Biol. 6: 163 - 168.

Huffaker, C.B. 1958. Experimental studies on predation: dispersion factors and predator-prey oscillations. Hilgardia. 27: 343 - 383.

Jorné, J. and S. Carmi. 1977. Liapunov stability of the diffusive Lotka-Volterra equations. Math. Biosci. 37: 51 - 61.

Jorné, J. and U.N. Safriel. 1979. Linear and non-linear diffusion models applied to the behavior of a population of an intertidal snail. J. Theor. Biol. 79: 367 - 380.

Kierstead, H. and L.B. Slobodkin. 1953. The size of water masses containing plankton blooms. J. Mar. Res. 12: 141 - 147.

Lakshmikantham, V. and S. Leela. 1969. Differential and Integral Inequalities Theory and Applications, Vol. 1. Academic Press, New York and London.

Leung, A. 1978. Limiting behaviour for a prey-predator model with diffusion and crowding effects. J. Math. Biol. 6: 87 - 93.

Leung, A. and D. Clark. 1980. Bifurcations and large-time asymptotic behavior for prey-predator reaction-diffusion equations with Dirichlet boundary data. J. Diff. Eq. 35: 113 - 127.

Levin, S.A. 1978. Population models and community structure in heterogeneous environments. In: S.A. Levin (ed.), Studies in Math. Biol., Vol II: Populations and Communities, pp. 439 - 476. M.A.A., Washington, D.C.

_____. 1974. Dispersion and population interactions. Amer. Natur. 108: 207 - 228.

Levin, S.A. and L.A. Segel. 1976. Hypothesis for origin of planktonic patchiness. Nature. 259: 659.

Lotka, A.J. 1924. Elements of Physical Biology. Williams and Wilkins Co., Inc., Baltimore.

May, R.M. 1976. Theoretical Ecology Principles and Applications. W.B. Saunders Co., Philadelphia and Toronto.

McMurtrie, R. 1978. Persistence and stability of single-species and prey-predator systems in spatially heterogeneous environments. Math. Biosci. 39: 11 - 51.

Mimura, M. and K. Kawasaki. 1980. Spatial segregation in competitive interaction-diffusion equations. J. Math. Biol. 9: 49 - 64.

Murray, J.D. 1977. Lectures on Nonlinear-Differential-Equation Models in Biology. Clarendon Press, Oxford.

Paine, R.T. 1966. Food web complexity and species diversity. Amer. Natur. 100: 65 - 75.

Pielou, E.C. 1977. Mathematical Ecology. John Wiley and Sons, New York.

Protter, M.H. and H.F. Weinberger. 1967. Maximum Principles in Differential Equations. Prentice-Hall, Englewood Cliffs, New Jersey.

Rosen, G. 1975. Nonexistence of dissipative structure solutions to Volterra many-species models. J. Math. Phys. 16: 836.

Sansone, G. and R. Conti. 1964. Nonlinear Differential Equations. Pergamon Press, Oxford.

Segel, L.A. and J.L. Jackson. 1972. Dissipative structure: an explanation and an ecological example. J. Theor. Biol. 37: 545 - 559.

Skellam, J.G. 1951. Random dispersal in theoretical populations. Biometrika. 38: 196 - 218.

Steele, J.H. 1974. Spatial heterogeneity and population stability. Nature. 248: 83.

Turing, A. 1952. The chemical basis of morphogenesis. Philos. Trans. Roy. Soc. London Ser. B. 237: 37 - 72.

Volterra, V. 1926. Variations and fluctuations of the number of individuals of animal species living together. In: R.N. Chapman (ed.), Animal Ecology. McGraw-Hill, New York.

Williams, S.A. and P.L. Chow. 1978. Nonlinear reaction-diffusion models for interacting populations. J. Math. Anal. Appl. 62: 157 - 169.

Yodzis, P. 1978. Competition for space and the structure of ecological communities. In: S. Levin (ed.), Lecture Notes in Biomathematics. Springer-Verlag, Berlin and New York.

APPENDICES

APPENDIX A

LOTKA-VOLTERRA EQUATIONS

The most widely used mathematical models describing ecological interactions are the Lotka-Volterra equations. Lotka (1924) and Volterra (1926) formulated the differential equations

$$(1) \qquad \frac{du_i}{dt} = u_i[a_{i0} + \sum_{j=1}^{n} a_{ij} u_j] , \quad i = 1,\ldots, n$$

to describe different ecological interactions, where $u_i = u_i(t)$, $i = 1,\ldots, n$ and a_{i0} and a_{ij} , $i, j = 1,\ldots, n$ are constants. Equations (1) represent a linear approximation to the per capita growth rate of the species u_i , $\frac{1}{u_i}\frac{du_i}{dt}$.

The equations have various interpretations depending on the signs of the parameters a_{i0} and a_{ij} . If $a_{i0} > 0$ and $a_{ij} < 0$ for $i, j = 1,\ldots, n$, then the equations represent competition, since species u_j have a negative effect on the growth rate of species u_i . If $n = 2$, $a_{10} > 0$, $a_{20} < 0$, $a_{12} < 0$, $a_{21} > 0$, and $a_{ii} \leq 0$, $i = 1, 2$, then the equations represent predation, where u_1 is the prey and u_2 the predator. If $a_{i0} < 0$ and $a_{ij} > 0$, $i \neq j$, $i, j = 1,\ldots, n$, then the equations represent mutualism. The species have a negative intrinsic growth rate $(a_{i0} < 0)$ and depend on each other for survival. These have been examples of pure competition, predation, and mutualism. By assigning other values to the constants a_{i0} and a_{ij} , model (1) can represent a combination of the various ecological interactions, competition, predation, and mutualism.

APPENDIX B

COMPARISON AND MAXIMUM PRINCIPLES

The Comparison Principle, the Maximum Principle, and Lemma B used in Chapter IV are stated. For a detailed presentation of their respective proofs, the reader is referred elsewhere.

To apply the Comparison Principle, the comparison functions must satisfy a mixed quasi-monotone property. It is defined below.

DEFINITION 1. Let $\dot{u}(t) = g(t, u)$ and $u(t_0) = u_0$, where $g = [g_j]_{j=1}^n \in C[E, \mathbb{R}^n]$ and E is an open (t, u)-set in $\mathbb{R}^{n+1}$. The function $g(t, u)$ is said to possess a mixed quasi-monotone property if the following conditions hold:

(i) $g_p(t, u)$ is nondecreasing in u_j, $j = 1, 2, \ldots, k$, $j \neq p$, and nonincreasing in u_q;

(ii) $g_q(t, u)$ is nonincreasing in u_p and nondecreasing in u_j, $j = k + 1, k + 2, \ldots, n$, $j \neq q$,

where $p \in \{1, 2, \ldots, k\}$ and $q \in \{k + 1, k + 2, \ldots, n\}$.

Comparison Principle

Let

(i) $g \in C[E, \mathbb{R}^n]$, where E is an open (t, u)-set in $\mathbb{R}^{n+1}$,

(ii) $v, w \in C[[t_0, t_0 + a), \mathbb{R}^n]$, $(t, v(t))$ and $(t, w(t))$ are in E for $t \in [t_0, t_0 + a)$, and

(iii) $g(t, u)$ possess a mixed quasi-monotone property.

Assume further that

$$v_p(t_0) < w_p(t_0) \ , \ v_q(t_0) > w_q(t_0)$$

and for $t \in (t_0, t_0 + a)$, the inequalities

$$(2) \qquad \begin{aligned} \dot{v}_p(t) &\leq g_p(t, v(t)) \\ \dot{v}_q(t) &> g_q(t, v(t)) \\ \dot{w}_p(t) &> g_p(t, w(t)) \\ \dot{w}_q(t) &\leq g_q(t, w(t)) \end{aligned}$$

are satisfied. Then

$$v_p(t) < w_p(t) \quad \text{and} \quad v_q(t) > w_q(t)$$

for $t \in [t_0, t_0 + a)$.

There are several corollaries to the Comparison Principle which are applicable to specific cases. They are stated below.

<u>COROLLARY 3</u>. Assume hypotheses (i) - (iii) hold. Let $u(t)$ be any solution to $\dot{u} = g(t, u)$ existing on $[t_0, t_0 + a)$ such that

$$v(t_0) = u_0 = w(t_0) \quad .$$

If inequalities (2) hold with strict inequalities, then

$$\begin{aligned} v_p(t) &< u_p(t) < w_p(t) \\ v_q(t) &> u_q(t) > w_q(t) \end{aligned} \quad ,$$

for $t \in (t_0, t_0 + a)$.

COROLLARY 4. Assume hypotheses (i) and (ii) hold and $g(t, u)$ is quasi-monotone non-decreasing in u. Let $u(t)$ be any solution to $\dot{u} = g(t, u)$ existing on $[t_0, t_0 + a)$ such that

$$v(t_0) = u_0 = w(t_0) .$$

If the inequalities

$$\begin{aligned} &\dot{v}_p(t) < g_p(t, v(t)) \\ (5) \qquad & \\ &\dot{w}_p(t) > g_p(t, w(t)) \end{aligned}$$

hold for $p = 1, 2, \ldots, n$, then

$$v(t) < u(t) < w(t)$$

for $t \in (t_0, t_0 + a)$.

COROLLARY 6. (Linear system) Let $g(t, u) = Au$, where $A = [a_{ij}]$ is an $n \times n$ constant matrix, and (ii) hold. Let $u(t)$ be any solution to $\dot{u} = Au$ such that $v(t_0) = u_0 = w(t_0)$. If $a_{ij} \geq 0$ for $i \neq j$ and inequalities (5) hold for $p = 1, 2, \ldots, n$, then

$$v(t) < u(t) < w(t)$$

for $t \in (t_0, t_0 + a)$.

The Comparison Principle and its corollaries are proved in Differential and Integral Inequalities Theory and Applications, Vol. 1, (Lakshmikantham and Leela, 1969).

LEMMA B. Let u be an H^2 function on B, where $\frac{\partial u}{\partial \eta} = 0$ on ∂B, then

$$\int_B |\Delta u|^2 \, dx \geq \lambda \int_B |\nabla u|^2 \, dx ,$$

where λ is the smallest positive eigenvalue of $-\Delta$ with homogeneous Neumann boundary conditions on B.

For a proof of Lemma B the reader is referred to an article by Conway, Hoff, and Smoller (1978).

DEFINITION 7. The operator

$$L \equiv \sum_{i,j=1}^{n} a_{ij}(x) \frac{\partial^2}{\partial x_i \, \partial x_j} + \sum_{i=1}^{n} b_i(x) \frac{\partial}{\partial x_i}$$

is said to be uniformly elliptic in a domain B if and only if there exists a positive number μ such that

$$\sum_{i,j=1}^{n} a_{ij}(x) \, \xi_i \xi_j \geq \mu \sum_{i=1}^{n} \xi_i^2$$

for all n-tuples of real numbers $(\xi_1, \ldots, \xi_n)$ and all x in B.

Maximum (Minimum) Principle

Let $u(x)$ satisfy the uniformly elliptic differential inequality

$$L[u] = \sum_{i,j=1}^{n} a_{ij}(x) \frac{\partial^2 u}{\partial x_i \partial x_j} + \sum_{i=1}^{n} b_i(x) \frac{\partial u}{\partial x_i} \geq 0 \quad (\leq 0)$$

with bounded coefficients in a domain B . Suppose $u \leq M$ $(\geq M)$ in B and $u = M$ at a boundary point P . Assume that P lies on the boundary of a ball S in B . If u is continuous in $B \cup P$ and an outward directional derivative $\frac{\partial u}{\partial \eta}$ exists at P , then

$$\frac{\partial u}{\partial \eta} > 0 \quad (< 0) \quad \text{at} \quad P$$

unless $u \equiv M$.

The proof of the Maximum Principle can be found in <u>Maximum Principles in Differential Equations</u> (Protter and Weinberger, 1967).

VITA

Linda Joy Svoboda Allen was born in Duluth, Minnesota on November 12, 1953. In the fall of 1971 she entered the College of St.Scholastica, Duluth, Minnesota. In June 1975 she graduated *summa cum laude*, with a Bachelor of Arts degree in Mathematics. The following September she accepted a teaching assistantship at The University of Tennessee, Knoxville and began graduate work in Mathematics. From April to July 1977 she was employed as a technical assistant at Oak Ridge National Laboratory, Oak Ridge, Tennessee. She received a Master of Science degree in Mathematics in June 1978.

Linda continued her graduate education, as she worked toward a Doctor of Philosophy degree in Mathematics. She and Edward Allen were married on September 20, 1980. The Doctor of Philosophy degree in Mathematics was awarded to her in March 1981.

The author was elected to Phi Kappa Phi (1972) honor society. Her professional memberships include American Mathematical Society, Mathematical Association of America, and Society for Industrial and Applied Mathematics.