12-2010

ANALYSIS OF ALTERNATIVE MANUFACTURING PROCESSES FOR LIGHTWEIGHT BIW DESIGNS, USING ANALYTICAL HIERARCHY PROCESS

Srinath Vijayakumar
Clemson University, kvijaya@g.clemson.edu

ANALYSIS OF ALTERNATIVE MANUFACTURING PROCESSES FOR LIGHTWEIGHT BIW DESIGNS, USING ANALYTICAL HIERARCHY PROCESS

A Thesis
Presented to
The Graduate School of
Clemson University

In Partial Fulfillment
Of the Requirements for the Degree
Master of Science
Mechanical Engineering

---

by
Srinath Vijayakumar
December 2010

Accepted by:
Dr Mohammed Atif Omar, Committee Chair
Dr Imtiaz Haque
Dr Mohammed Daqaq

ABSTRACT

The main objective of the analysis was to investigate the forming of Body in White (BIW) panels using alternative processes most suitable for replacing the conventional press working process in order to achieve a reduction in the total mass of the vehicle body structure. The selection of the alternatives was guided by multi criteria decision making tool, the Analytic Hierarchy Process (AHP). Here the alternatives were selected based on their relative importance to the different manufacturing attributes considered. The selected processes were applied to the manufacturing of different parts of BIW indicated in the BOM along with suggestion of the appropriate material to be used.

DEDICATION

I dedicate this work to my parents and grandparents who have been a perennial source of motivation and inspiration throughout my life. For all the sacrifices they have made and continue to make, I wish I will live up to their expectations.

ACKNOWLEDGMENTS

I would like to express my immense gratitude to my advisor Dr M.A Omar for his continuous support, guidance and encouragement without which this work would not have been possible. I am thankful to my committee members Dr Imtiaz Haque and Dr Mohammad Daqaq for their valuable inputs.

I would like to take this opportunity to thank my close friends and research group colleagues Arun and Harish for their solidarity and constructive criticism which has gone a long way in helping me refines my work. Also I would like to take this opportunity to thank my research mates who have been with me through the time of work for their moral support and friendship.

TABLE OF CONTENTS

CHAPTER PAGE

LIST OF TABLES

LIST OF FIGURES

CHAPTER ONE

Need For Light Weighting Of Vehicle

Introduction

The automobile industry forms the backbone of the economy of USA. The automobile industry as described in CRS report for congress titled "US Automotive Industry: Policy Overview and History" [1] is dynamic industry marked by frequent changes in both technological and management fields. The current trend in the field of automotive relates to an increasing need to conserve fuel and establish a green environment. This can be achieved through various means such as better transmission design, increase in the engine efficiency, better logistics and weight reduction. The objective of the chapter is to highlight the importance and need of weight reduction of a vehicle. It describes the need for the integration of new technologies in a conventional system and the factors, regulatory standards governing the technological changes, driving these needs. It gives an overview of the factors and their effect on the manufacturing decision taken by the Original Equipment manufacturers (OEM).

The first part of the chapter deals with the introduction of regulatory standards, their objectives, efficiency and effectiveness and their achievements and shortcomings. The second section deals with the impact of such regulatory standards on the manufacturing decisions taken. In particular it addresses the different ways in which the OEM can achieve these standards through manufacturing changes. These include both changes in manufacturing and material used in the production of BIW. The later part of

the chapter gives a lead on the flow and methodology of the work to be described in the succeeding chapters.

1 CAFE Standards

The CAFE (Corporate Average Fuel Economy) standards were established in the year 1975 by the Energy Policy and Conservation Act (EPCA) in response to the oil embargo established by the Arab nations from 1973 – 1974. Though this was not the first regulatory standard to be introduced by the government, the first automotive emission control technology was established in the state of California in 1961, this was the only standard that with a view of economic control rather than to address the issues related with the environmental pollution. Since the transportation sector was the biggest consumer of fossil fuel an act was passed to control this sector. This was introduced with an objective of reducing the dependency on oil imports and thereby reduces economic dependency on external factors. These standards were to be applied for all cars from the model year 1977 (MY 1977). The CAFÉ standards prescribe a minimum average fleet economy which must be met by all OEM else face fines or negative credits. The current penalty for not meeting the standards set for the model year is $5.50 per 0.1 Mpg less than the set standard multiplied by the total fleet production volume. The base value to be targeted is decided by the EPA (Environmental Protection Agency) and NHTSA (National Highway Traffic Safety Administration). [2]

As explained in the work titled “Theoretical and Practical Possibilities of a Market Mechanism Approach to Air Pollutant Control” [3] though oil consumption could be checked by imposing taxes on the externalities produced by the transportation industry

this was rendered impossible due to the complex nature of the relationship between various factors affecting the externalities. For example a tax on the pollutants emitted by a vehicle is not effective as the amount of pollutants emitted depends on various uncontrollable factors such as weather, road condition, operating condition etc. These factors cannot be accurately accounted hence making the act of levying taxes absurd. Also levying of taxes without a regulating standard would not have led to an advancement in technologies.

The establishment of CAFÉ standard resulted in introduction of various technologies leading to an increase in fuel efficiency of the vehicles. Some of the technologies introduced as a result of introduction of these standards were 3 way catalytic converter, multi point fuel injection system (MPFI), electronically controlled combustion, etc. 70% of the increase in fuel economy was due weight reduction, improved transmission, better aerodynamics, and use of front wheel drive and use of fuel injection technologies. [4]

The effectiveness of CAFÉ standards is visible in from the fact that it along with price rise in gasoline lead to doubling of the fuel economy from the period between 1974 to 1984. One of the main tools used by the OEMs to achieve this was to reduce the weight of the vehicle. The work carried out by Nivola and Crandall proves through regression analysis that CAFÉ has been responsible for most of the reduction in vehicle weight. The average weight of a domestic vehicle in 1974 was 4380 lbs which was 1676 lb more than the average weight of Euro cars and 1805 lbs more than that of the Asian cars. By 2000 the average weight of the domestic cars was 756 lbs lesser than that of the

Euro cars and just 245 lbs more than the Asian cars. The use of this standard also resulted in reduction of pollutants released, the pollutants emitted in 1994 where just 25% of what was emitted in 1975 [5].

The standards are continuously updated for succeeding model years leading to a continuous improvement in the technology used in the vehicle. The fuel standards to be achieved for future model years along with the standards for the previous model years as set by the US DOT (Department Of Transportation) are represented in table 1 shown below

Table 1 Estimated Fuel economy standards [2].

Model Year	Passenger cars	Light trucks
2000	27.5	20.7
2001	27.5	20.7
2002	27.5	20.7
2003	27.5	20.7
2004	27.5	20.7
2005	27.5	21
2006	27.5	21.6
2007	27.5	22.2
2008	27.5	22.5
2009	27.5	23.1
2010	27.5	23.5
2011	27.5	24

As per Ching Shin Norman Shiau in his work as described in [6] the estimated standard as per CAFÉ would be about 30.2 MPG for 2011. Some of the different standards that are currently under consideration is depicted in figure 1, this also includes the proposal from the current president of united states Obama. It also gives a comparison

between the Co_2 emission and MPG to be achieved. Control of Co2 emission is given high priority as per the Kyoto protocol due to the green house effect caused by it.

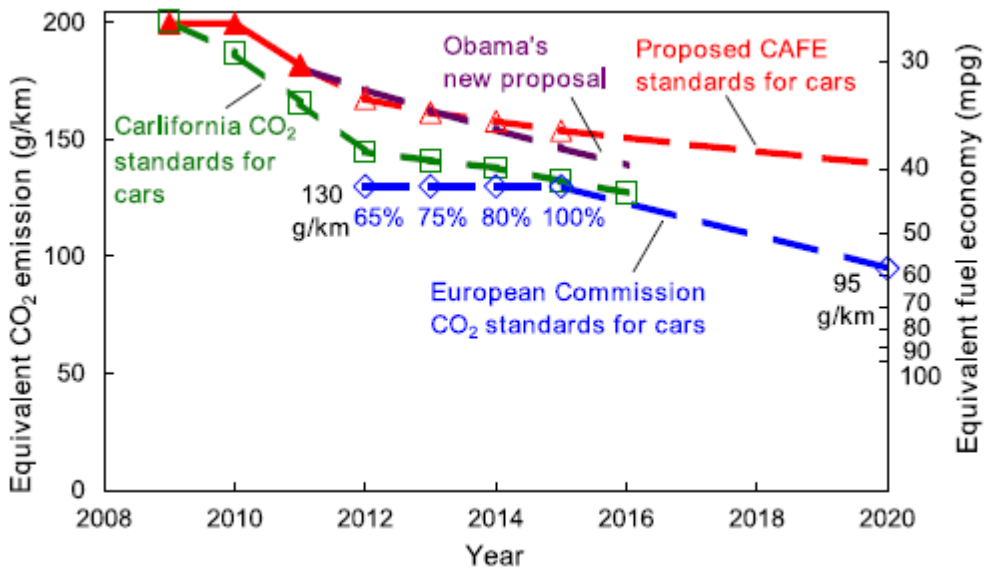

Figure 1 Comparison of different standards [6].

Weight reduction is one of the most effective ways of controlling the fuel consumption as a 10 % reduction I weight brings about a 5% reduction in the fuel consumption [7]. The relationship between vehicle weight and the fuel consumed as depicted in equation (1.1) is obtained by conducting a regression analysis of the current North American production midsize vehicle as shown in [8].

$$MPG = const \times (Kg)^{wgt} (width \times height \times c_d)^{aero} \times (liters)^{disp} \times (horsepower)^{hp} - (1.1)$$

Where

Constant = 1019.892

Wgt = -0.42357

Aero= -0.111

Disp = -0.13856

HP = -0.09086

Also different studies suggest different correlation between vehicle weight and fuel consumption. From [9] we have the relationship described by equation (1.2) .

$$MPG = 895.74 \times mass^{(-0.463)} \qquad -(1.2)$$

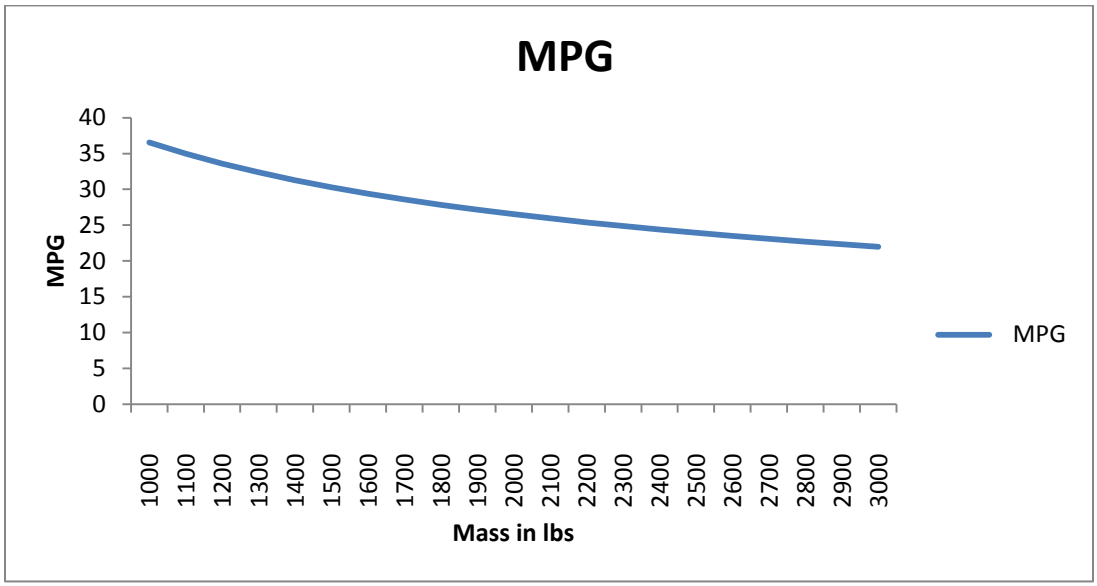

Figure 2 Graphical representation of fuel economy vs mass equation

The main opposition in implementing the CAFÉ standards in spite of all these benefits is based on the fact that weight reduction which plays an important role in increasing the fuel economy is achieved at the expense of vehicle safety. Some of the work in relation to this was carried out by Dr Charles Kahane described in [10] & [11]. These works are argued to be void by the American chemistry council as the combined effect of both size and weight were not considered in both the works. Also work carried

out by the National Academy of Sciences (NAS) classified Dr Kahane's work as being overly simplistic and suggested the NHTSA to carry on further intensive research to establish a relationship between size weight and safety of a vehicle. Experimental work carried out by the Dynamic Research Inc in the field of crash testing resulted in the observation that extension of crush zones without increase in weight resulted in a 26% increase in the Expected Life Units (ELU). A practical example of this case can be seen in the Jaguar XJ8 2004 model as compared with that of its 2003 model [12].

Another major constraint leading to a state of indecision on the part of the manufacturer in improving the fuel economy of their fleet is the increase in vehicle cost. This results in a situation where the customer has to pay more for gaining a minimal return through increased MPG. Hence the manufacturer has to decide on the process selection in a way that the net total cost saving in the view of customer which is the difference between the increase in vehicle cost and savings due to increased MPG is on the positive side. This can happen only with a reduction in production cost without compensating on the issue of quality as that will eventually affect customer retention. The effect of this is shown in figure 3.

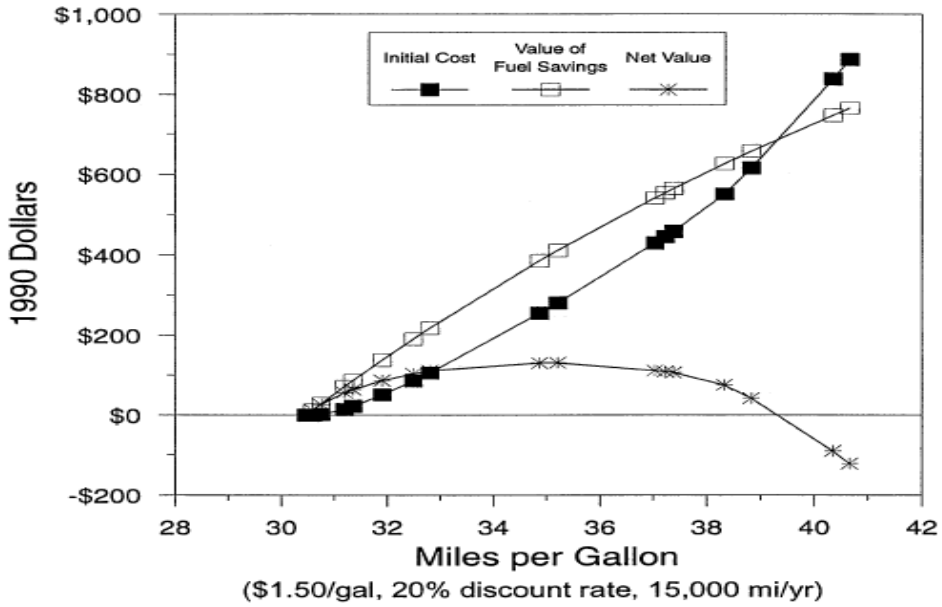

Figure 3 Net total saving by the customer from increase in MPG [4]

From the above works we can conclude that the one of the most effective way to achieve the mandatory fuel economy standard set by the CAFÉ and also to stay competitive in the market is weight reduction and decrease in the overall production cost of the vehicle. Also a decrease in vehicle weight results in lesser Co_2 emission as shown in the case of Peugeot where a reduction of 50 kg resulted in 1.5g/km less emission of Co_2 [7]. From [7] we also know that a reduction of vehicle weight by 10% lead to an increase in fuel economy by 5%. Thus we concentrate on different methods, constraints and requirements in reducing the vehicle weight and the overall production cost. The following section deals with the manufacturing technology available to achieve this objective.

2 Weight and Cost Reduction through Manufacturing Decisions

This section describes the various ways through which an OEM can bring about a reduction in the total vehicle weight and overall production cost. These objectives again depend on various other attributes of a manufacturing system like reduction in number of components, modularization of parts etc which are discussed in detail in chapter 2. From the perspective of an OEM manufacturer the main factors affecting the weight of the vehicle are

1) Vehicle Design
2) Material Used

These factors again depend on various other factors which will be discussed in brief now and will be discussed in detail in the later chapters.

2.1 Vehicle Design

With regard to weight reduction the most critical area is that of the body in white design of a vehicle. The BIW accounts for up to 25 % of the total curb weight of the vehicle. The three main types of vehicle body structure are Monocoque, space frame and hybrid structure. Figure 4 shows the three different structures. Here the different structures are described with their advantages and limitation followed by the potential for the application of alternative manufacturing technologies. The alternative technologies will be described in chapter 3.

Monocoque Structure – The monocoque structure consists of predominantly stamped parts and posses excellent rigidity. It is still one of the most suited designs for a high

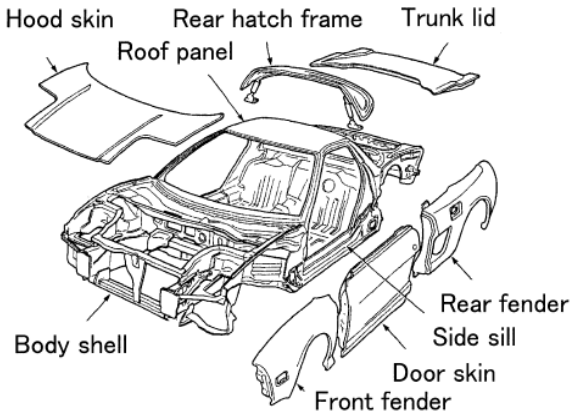

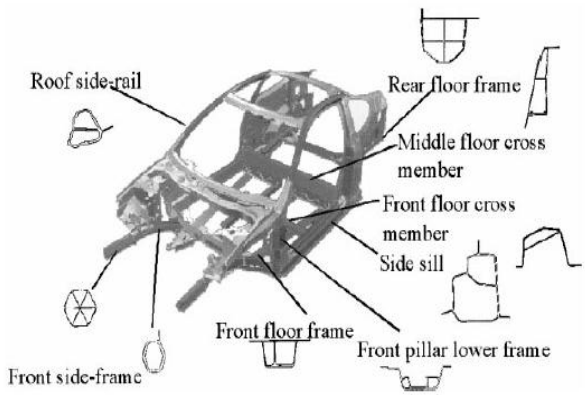

A) B)

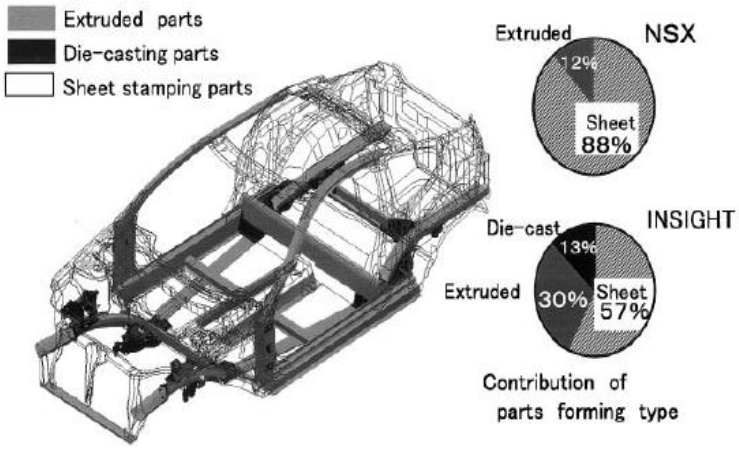

C)

Figure 4 A) NSX Monocoque Structure B) Audi A2 Space Frame Structure C) Honda INSIGHT Hybrid Structure [13]

volume of production. The parts are predominantly joined using simple welding techniques such as spot welds or seam welds. It is also easier to use adhesives for joining

of parts in such a structure. On substituting the primary material with aluminum instead of steel as in Honda NSX a weight reduction of up to 140 kg was achieved [7].

Some of the disadvantages of this type of structure are that it has higher number of components as compared to a space frame or hybrid structure. Such a structure is not suitable for a low volume of production. Since the parts used in this structure are predominantly stamped it becomes necessary that the material used should have good formability characteristics. This proves to be highly disadvantageous as it increases the cost of vehicle due to repeated operations when light weight materials like aluminum are used. Like explained in [7] substitution of steel with Al resulted in up to 50K amps of welding current and 800 kgf of weld force as compared against the 120K amps and 300kgf of weld force required for steel. This has largely negated the advantages that could have been gained by the weight reduction of 40%. Due to the springback effect resulting from a low 'r' value there was an increase in the number of operations also.

These problems can be addressed by substituting sheet hydroforming and/ superplastic forming as the major forming process instead of press stamping as they are more suited for aluminum and medium volume production vehicle. The use of hydroforming can also further reduce vehicle weight as it can bring about a reduction in the number of components. The same can be achieved by superplastic forming as will be explained in the succeeding chapters. Also since Honda NSX falls under the category of medium volume production the sheet hydroforming can be a good substitute along with superplastic forming.

Space frame structure – From the works of Geoff Davies and Masaaki Saito described in [7] & [13] a typical space frame structure consists of predominantly extruded parts. This type of structure was specifically designed for building of vehicle body using aluminum as the primary material. It possesses better energy absorbing abilities during crash scenarios. It is relatively easy to build as majority of sections are tubular structure that are readily extruded or cast depending on the complexity and role in load bearing property. Also since the outer panels do not take any load they can be thinned considerably leading to weight reduction. Also as the numbers of components are less compared to that in monocoque structure for the same vehicle size, this further reduces the total curb weight along with the use of lightweight materials. Another great advantage of using space frame structure is it is highly modular nature and thus is highly suitable for the concept of mass customization.

Some of the disadvantages in manufacturing of a space frame structure using conventional technologies are in the area of joining of components, production volume, and production rate. The use of adhesives for the process of joining is inhibited due the complexities in application and also for the same reason the use of spot weld is also limited. This calls for the extensive use of laser weld and mechanical fasteners which increase the production cost. The ASF (Aluminum Super Frame) model used in A8 consists of 2400 rivets, 64 meters of MIG weld and 20 meters of laser weld. Also the use of casting process induces a high machining cost and increases the production rate [7].

Alternative manufacturing technologies like tubular hydroforming process has great potential in the fabrication of space frame structure as the main structures are

mostly tubular in nature. Also the process of die less hydroforming can be used for the joining the space frame components as described in [14]. The hydrojoining techniques like hydro self pierce riveting and hydro clinching as described in [15] can also be used for joining of tubular components thereby reducing the need for laser weld and hence decreasing the production cost. These techniques will be discussed in detail in chapter 3 of this document.

Hybrid Structure – It consists of a mixture of monocoque structure and space frame structure. It combines the desired qualities of both monocoque and space frame structure and has excellent rigidness as well as good crash absorption characteristics. The use of such a structure in Honda INSIGHT bought about a reduction in number of components by as much as 15% and reduction in weight by 24% [13]. For the same reasons as described for the other two body structures hydroforming and superplastic forming can be used instead of conventional processes like extrusion and press stamping.

2.2 Material Used

The material used in an automobile plays an important role in the determining total weight of the vehicle, as it is directly affected by the density of the material used. The material used also affects the manufacturing process which in turn affects the part count. The major materials that are consistently used in the construction of Body in White are steel, aluminum and off late magnesium.

Some of the properties which affect the selection of material are its formability, drawablity, yield strength and tensile strength. These characteristics are described in brief as derived from [8]

Yield Strength – It represents the stress at which the plastic deformation of the material starts. It is generally measured at a strain offset of 0.2% on a stress strain curve.

Tensile Strength – It represents the maximum stress bearable by the material, after which the material will fail.

Formability – It is defined by the strain hardening exponent ‘n’ value of the material. It is usually measured as the slope of stress strain curve at 10- 20% of strain and indicates the relative stretch formability of the sheet metals and increase in strength due to plastic deformation. It gives a measure of how evenly strain is distributed in the section. An increase in ‘n’ value indicates an increase in the formability of the material.

Drawablity – It is indicated by the plastic strain ratio ‘r’ value of the material. It describes the materials ability to resists thickening or thinning of material on application of force. A high value of ‘r’ indicates a high drawablity of the material which is usually the desired case.

Steel – Steel is the most used material in automobiles due to its excellent formability, availability, ease of recyclability, excellent paintability, and good work hardening rates. There are different types of steel that are used in automobile based on function required. As described in [16] the steels used in automobile industry are available in the following types possess specific characteristics based on their composition.

- Commercial Quality (CQ)
- Low carbon – Drawing Quality (DQ)
- Interstitial Free (IF) stabilized – Drawing Quality

- Dent resistant
- Bake Hardenable (BH)
- Non Bake Hardenable
- High Strength Low Alloy (HSLA)
- Ultra High Strength Steel/ Advanced High Strength Steel (AHSS) – DP, TRIP
- Laminated Steel
- Stainless Steel

Initially the steels used were classified as either hot rolled steel or cold rolled steel. In this case importance was attached to the drawablity of the steel. The main classifications of the steel available were; Commercial qualities (CQ), Draw quality (DQ), Deep draw quality (DDQ) and Extra deep draw quality (EDDQ). The steels have been listed in increasing order of formability. The surface finish of the steels rolls were decided based on the type of surface they were to be used on. Typically a Class A surface or exposed surface had a better surface finish compared to Class B (semi exposed) or Class C (unexposed) surface. The drawbacks with these types of steels were that they had poor yield strength and dent resistance. To compensate for this thickness of the material had to be increased resulting in an increased weight of the vehicle.

This led to production of dent resistant, high speed steel (HSS), bake hardenable (BH) steel and high strength low alloy (HSLA) steel. These had higher yield strengths and thereby playing an important role in the weight reduction of the vehicle. Dent resistant steel is usually classified as bake hardenable or non bake hardenable steel. Non bake hardenable steel derives its final strength as a combination of initial strength and work

hardening of the material during the forming process. Bake hardenable steel have high formability in the initial stages and posses good strength in final stages due to work hardening from both forming and painting baking cycle. This unique property of BH steel enables it to be substituted for DQ steel without making any major changes to the die. Figure 5 depicts the BH steel behavior through a stress strain diagram.

These improved properties were often at the cost of slight decrease in the 'n' value thus affecting the formability and calls for die re-design. Advanced high strength steels such as DP (Dual Phase), TRIP (Transformation Induced Plasticity) steel, Martensitic steel were introduced to compete with other light weight metals and further light weighting requirements. These types of steels have higher strength along with improved formability. The DP steel relies on it microstructure consisting of a combination of both ferrite and martensite to provide a high tensile strength and low yield strength thus improving the value of 'n'. Due to it high work hardening rate these have high formability at initial forming stages and posses high strength in final stages. TRIP steels shows the same work hardening behavior when measure at 0-7% of strain. But a study of their work hardening behavior at 7- 20% of their strain rate shows that there is a delay in the onset of localized thinning and necking due to its unique microstructure which helps in stabilizing the plastic deformation and increases strength.

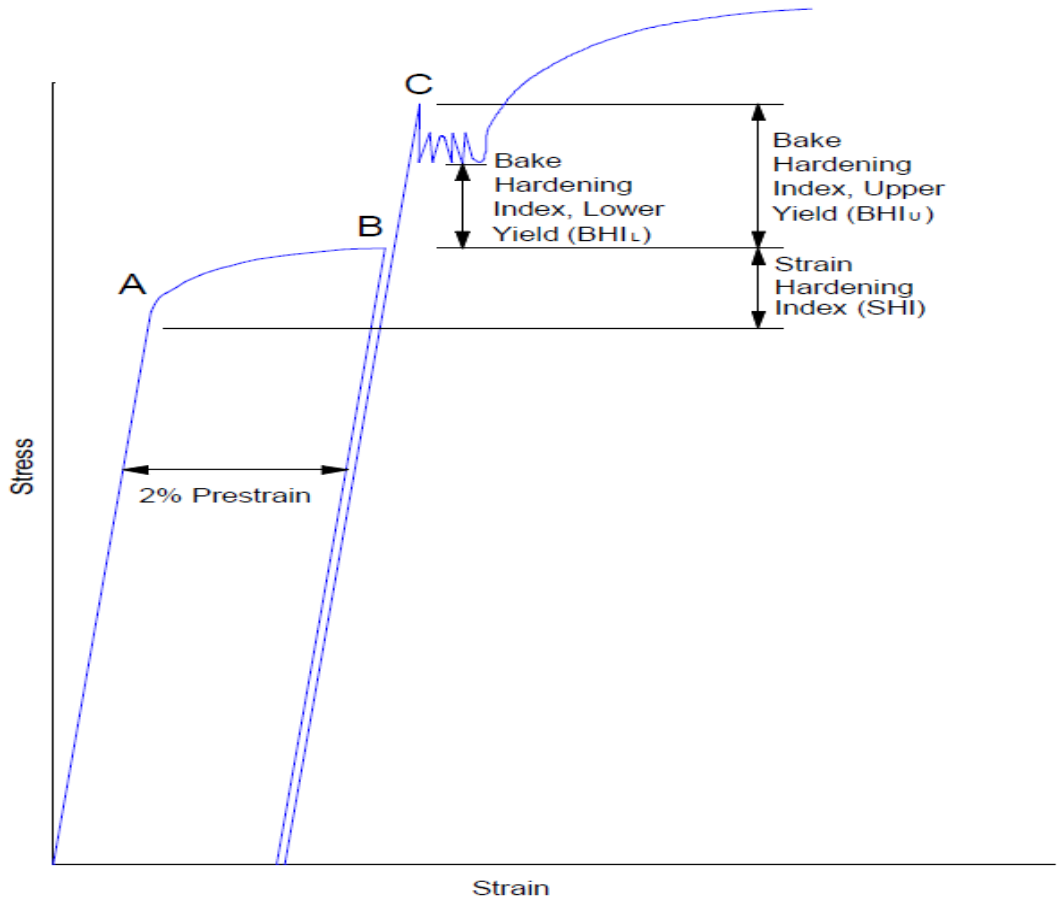

Figure 5 Strain hardening behavior of BH steel [16]

Figure 6 shows the formability of the advanced high strength steels relative to each other.

One of the factors affecting the use of these steels is the increased in cost. The cost of the material increases with increased formability thus increasing the production cost. This can be addressed by using process such as hydroforming which tends to increase the formability of the material [17].

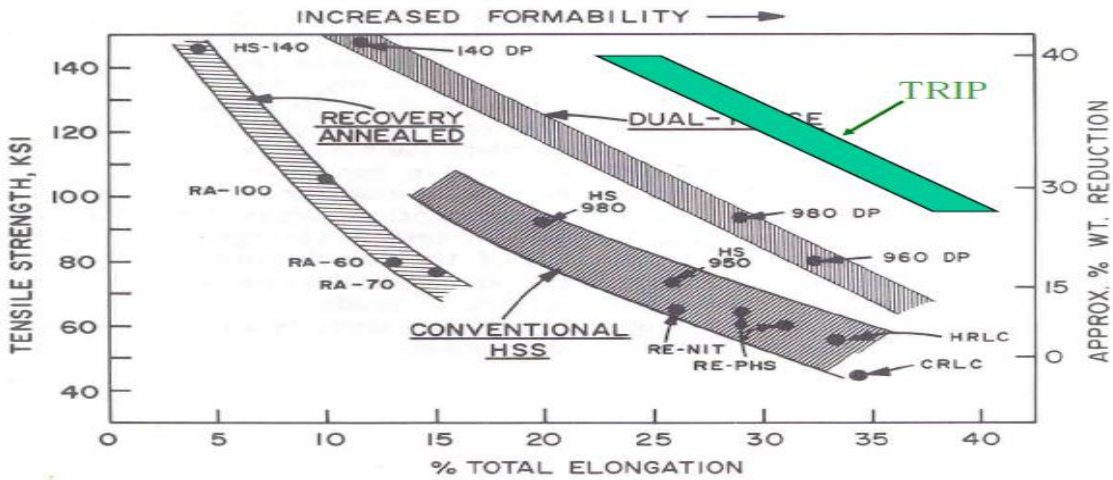

Figure 6 Comparison of the relative formability of AHSS [18].

The feasibility study on the potential of hydroforming process in weight reduction in automobile using HSS, TRIP and BH steel in majority was carried out by as described in [19] which resulted in weight reduction of up to 36% and the cost of the body structure was on level with that of the bench marked structure. Also the BIW structure possessed excellent crashworthiness characteristics. Tubular hydroforming was utilized for the creation of side roof rail member using HSS. This resulted in reduction of both mass and cost due to decrease in number of parts and weight. Sheet hydroforming was utilized for the manufacturing of roof panel which enabled the use of sheets of thinner gauge resulting in reduction of both weight and cost.

Aluminum – Aluminum has been used in cars right from 1909 for different components. The advent of CAFÉ standards and an increasing pressure on the OEMs to reduce the emissions from vehicle led to an increasing interest in aluminum as a substitute for steel as the primary material for BIW. This was due to the low density of aluminum which was 2.69g/cc. though the substitution of aluminum instead of steel

would have resulted in a weight reduction of about 40% the complexities regarding its formability and availability caused the OEMs to continue with steel. The main advantages of aluminum have been its resistance to corrosion, low density, ease of recyclability and the presence of a strong supply base. Studies show that aluminum has a very high recyclability rate, as high as 83% for beverage cans with the can to can ratio being 68% [7] [19].

The main limitation of aluminum is its relative complexity in forming process which arises due to its poor modulus of rigidity which is 69 Gpa as compared against that of steel which is 210 Gpa. These calls for a complete redesign of all dies and other process such as joining painting etc. since the ‘r’ value of aluminum is on the lower side the maximum depth up to which a part might be drawn in a single shot is also limited. This leads to need for repetitive drawing operation and thus increasing the cost. Also due to this thicker gauge of sheet have to be used which tough decreases the weight it results an increased cost. Thus the high and often fluctuating cost of aluminum also affects the continuous production of vehicle in JIT system. The high cost in spite of high recyclability ratio is due to the fact that extraction of pure aluminum from aluminum alloys that are often used in vehicle is a complex and expensive process. Also welding of aluminum has proven to be expensive as described in the above section [7] [20].

The comparison of the FLD curves of steel and aluminum is shown in figure 7.

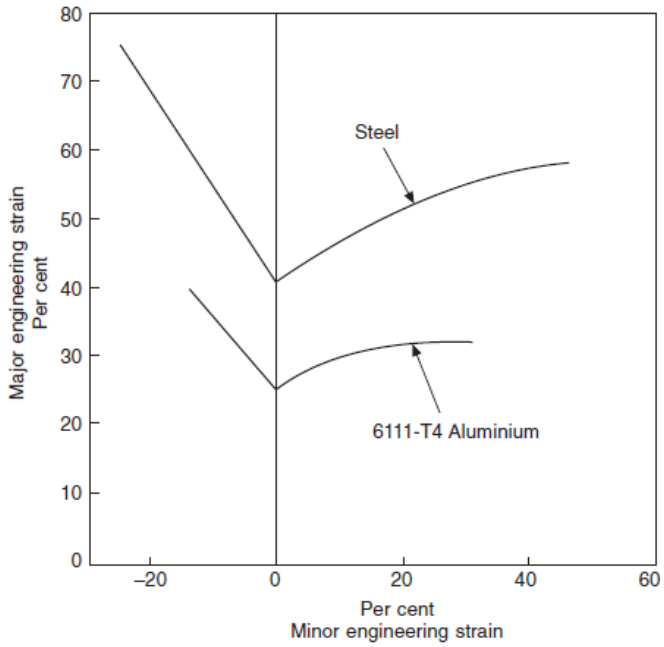

Figure 7 Comparison of the FLD of aluminum and steel [7].

The two main aluminum alloys developed for automotive application were the Al5xxx series and Al6xxx series. The 5xxx series alloys are predominantly used for manufacturing of inner panels while the 6xxx series alloys are used for class A surface. The 5xxx series alloys possess excellent formability characteristics which suits the deep drawing operations. Also it has better welding characteristics when compared with the 6xxx alloys. The application of 5xxx series alloy for class A surface are limited as they have a tendency to soften when they undergo the paint curing process which greatly affects their dent resistance. The 6xxx series alloys have excellent work hardening characteristics and undergo bake hardening during the paint curing process. Due to this their final strength is high and they possess excellent dent resistant characteristics. Also they possess much better hemming characteristics compared to 5xxx series alloys. The main reason for their application to class A surface as against the 5xxx series alloys it that

they have better surface finish as they are devoid of any stretch strain markings and have anti orange peel effect [7] [20].

Despite the improvements in the alloys design changes were required for the use of aluminum as the primary material. The aluminum material is better suited for space frame structure and hybrid structure instead of a monocoque structure. Also the applications of different manufacturing technologies are aimed at bringing about a further reduction in cost and weight through the use of aluminum. The OEMs have developed their own customized superplastic forming to achieve the objectives, for example ford has developed a customized superplastic forming process named the ford advanced superplastic forming technique (FAST) and the GM uses a quick plastic forming technology. A study on the technological and economical feasibility of superplastic forming of door of a car instead of conventional process was carried out by applying the FAST process which is described in [21]. The results obtained from the study show that the weight of the door structure when manufactured by applying FAST bought about the total weight of the structure by 11.4%. Also when the inner assembly was manufactured by FAST as a single piece it bought about a weight reduction of 26%. Also the economical analysis done showed that the piece per cost of the door was $297 as compared against the benchmark value of $315. Also the tooling cost estimated for FAST was $85817 as against $4, 49,000 required for the conventional process. Also Opel GT uses the process of hydroforming for manufacturing chassis part [22].

Magnesium- Magnesium with a density of 1.74g/m^3 is 35% lighter than aluminum and posses much better damping characteristic of noise and vibration. The main advantage of magnesium has been its low density coupled with high strength to weight ratio. This has made it to be considered as the material for future. Also it allows for casting of much thinner gauge and hence indirectly helps in the process of part consolidation. Also raw magnesium is available in abundance as it is the 8th most available material on the planet. The life cycle cost analysis of materials places it at a much more advantageous position than that of steel and aluminum [23].

Table 2 Comparative description of mechanical properties of Magnesium, Aluminum and Steel [23].

Property	Magnesium	Aluminum	Iron
Crystal Structure	Hcp	Fcc	Bcc
Density(g/cm^3)	1.74	2.70	7.86
Coefficient of thermal expansion(10^6)	25.2	23.6	11.7
Elastic Modulus(10^6 Mpa)	44.126	68.974	206.842
Tensile Strength (Mpa)	240 (AZ91)	320(A380)	350
Melting point(^{o}c)	650	660	1536

The main reason why magnesium is not used as the primary material in the construction of BIW is its poor formability. The poor formability of magnesium at room temperature arises due it hexagonally closed pack structure as shown in table 2. Also due to its closed pack hexagonal structure the amount of energy consumed for forming of magnesium product is much higher than that of aluminum and steel ultimately leading to

an increase in the production cost. These rules out the possibility of press working to be used for the production of manufacturing parts as in the case of steel and aluminum. Thus all the magnesium parts used in today's automobile are produced only by casting. The disadvantage with casting process is that it has lower elongation than other materials such as steel and also increases the machining cost. Also the machining cost of magnesium remains on the higher side due to the complexities posed by it due to its low melting point. The melting point of aluminum is around 650°c due to which there is always a risk of fire hazard. Also the cost of production is increased due to the need of coating, e.g. Teflon resin, in case of magnesium in order to prevent the galvanic corrosion of magnesium. The use of magnesium also rules out any use of water based coolants as its reaction with water produces oxides which will reduce the salvage value [23].

Studies are being carried out for determining the feasibility of employing superplastic forming of magnesium alloys, [24], [25] and [26], as an substitute for die casting process. The advantages of superplastic forming of magnesium remains the same as that of aluminum described in the above section. Also if magnesium is to replace aluminum in the construction of BIW the superplastic forming process will not undergo any major change as both magnesium and aluminum have same behavior at elevated temperature [27]. These leads to minimum changes in the die and process of the manufacturing system. The greatest limitation in the application of superplastic forming to magnesium forming is the high cost of superplastic magnesium alloys which will increase the cost of production.

The above mentioned factors lead to a need for alternative manufacturing technology to meet the future regulations and at the same time to address the issue of mass reduction. Thus this chapter elucidates the need for alternative manufacturing process and their potential in achieving our objective. To determine the most suitable process for achieving our objectives of weight and cost reduction we make use of decision making tool as described in the next chapter. The technical details of the various forming process described will be explained in detail in chapter 3.

CHAPTER TWO

SELECTION OF ALTERNATIVE MANUFACTURING PROCESS USING ANALYTIC HIERARCHY PROCESS

Introduction

The aim of this chapter is to describe the use of Analytic Hierarchy Process (AHP) in multi criteria decision making process. As process selection is one of the most important steps in conceptual stage of system design it necessitates the use of evaluative decision making tool such as that of AHP to avoid any inappropriate decision. The process is selected based on the pairwise comparison and prioritizing of alternatives and attributes at each level. A brief overview of the applications of the tool followed by description of the science behind the working of this tool is described in section one of the document. The algorithm for the application of the tool is also described in this section. The second section describes the application of AHP for the deciding the most suitable alternative manufacturing process. The consequence and inferences of the result obtained will be discussed in chapter 4 along with its area of application.

The main objective of any decision making process is to decide on the alternative that best suits our requirements and criterions. It is obvious that the best alternative can be chosen only after comparison with reference to all the attributes (requirement and criterion). Here again while a particular alternative may be able to fulfill a particular attribute this may not be the case when it is compared with respect to another attribute, this necessitates the need for a tool which enables an overall prioritizing. This is one of

the main reasons why AHP was preferred over other decision making tools for the purpose of selecting the appropriate alternative processes.

An AHP is a multi objective decision methodology that provides a logical formulation of the selection of problems and reduces ambiguity. As in any problem solving methodology AHP also consists of three main principles that are – decomposition of the problem, comparison of the difference elements involved and synthesizing of priorities. These will be discussed in detailed in the later sections. The main advantage of AHP is that here the weights are calculated and from pair wise comparison and not just assigned. The other advantages of using AHP are shorter product development time, checking for consistency of the ratings and better quality of the product. From the work of Saaty [28] we know that it can be used for both relative and absolute evaluation.

AHP has been used as a decision making tool over a wide range. The manufacturing industry is the major user of AHP as indicated in [29]. [30] Describes the use of AHP in selection of layered manufacturing techniques. A final selection was made considering the four levels namely – application, prototype categories, attributes and alternatives. The work proves the adaptive nature of an AHP model where in with change in certain need or constraint evokes a different result. Prioritization is done by ranking the alternatives with respect to attributes and then ranking attributes with respect to prototype categories. Results of the test confirmed the validity of the selection procedure based on the adaptive AHP model.

The application of AHP for the purpose of material selection of polymeric composites for automotive bumper is described in [31]. Here again a four level hierarchy

is used consisting of the objective, main criteria consisting of the factors affecting the material selection, sub criteria forms level 3 and the level four consists of different alternatives to choose from. A sensitivity analysis is provided for checking the consistency of rankings.

The work done by Che Wei Chang in the work titled “ An Application Of AHP And Sensitivity Analysis For Selecting The Best Slicing Machine “ [32] describes the use of AHP tool in the selection of silicon wafer slicing machine quality systems consisting of a four level hierarchy system. The results obtained are then cross checked and held in confirmation after using Exponentially Weighted Moving Average Charts (EWMA) and sensitivity analysis. While the EWMA control chart was used to verify the feasibility and effectiveness of the AHP based algorithm the sensitivity analysis was used for testing the stability of the priorities obtained through the application of the AHP. [33] Describes an AHP based decision support system with a three level hierarchy system for selecting the most suitable casting process for a given product. Factors such as dimensional tolerance, surface finish, material suitability and flexibility are considered. Here the effectiveness of the AHP is illustrated by a numerical example.

Table 3 AHP literature review [29]

AHP	2005	2006	2007	2008	2009
	Ayag (2005)	Abildtrup et al. (2006)	Arshinder and Deshmukh (2007)	Ahn and Choi (2008)	Aguilar-Lasserre et al. (2009)
	Carnero (2005)	Alkahtani et al. (2006)	Carlucci and Schiuma (2007)	Angelou and Economides (2008)	Bahinipati et al. (2009)
	Chan et al. (2005)	Caliskan (2006)	Pilavachi (2007)	Dey and Ramcharan (2008)	Erol et al. (2009)
	Chougule and Ravi (2005)	Ertay et al. (2006)	Chen and Liu (2007)	Khorramshahgol and Djavanshir (2008)	Ho and Emrouznejad (2009)
	Wei et al. (2005)	Nagesha and Balachandra (2006)	Zeng et al. (2007)	Ahn and Choi (2008)	Li and Li (2009)
	Yurdakul and Ic (2005)	Teo and Ling (2006)	Liou and Tzeng (2007)	Yu J (2008)	Sharma and Agrawal (2009)
	Tsai (2005)	Masozera et al. (2006)	Kahraman et al. (2007)	Su and Chou (2008)	Wan et al. (2009)
	Scholl et al. (2005)	Strager and Rosenberger (2006)	Diamantopoulos (2007)	Wong and Li (2008)	Park et al. (2009)
	Richman et al. (2005)	Kuo and Chen (2006)	Chang et al. (2007a)	Martinez-Olvera (2008)	Shin et al. (2009)

The above table gives further examples of the various work carried out which has used AHP as the tool for multi criteria decision making. The list of work suggested in this section depicts the popularity of the AHP tool for multi criteria decision making.

Similar example of an application is described [34] where AHP is used for the evaluation of FMS (Flexible Manufacturing System) in a tractor manufacturing plant. Here the company had to choose between the alternatives of whether or not to implement FMS through ought the organization. Here again sensitivity analysis was used to evaluate the stability of priorities.

A more complete study of the applications of AHP is described in [29]. Table 3 shows some of them as illustrated in [29]. This clearly illustrates the popularity of AHP as a decision making tool under multi criteria condition.

1 Working of Analytic Hierarchy Process

AHP is a decision making tool that provides a framework for considering intuitive, rational and irrational decision in an environment of multi criteria, multi objective and multi actor scenario with or without the certainty of the number of alternative. It breaks down the problem into constituting elements and using a system of pair wise comparison leading to the prioritization of the alternatives available [35].

The main steps involved in the AHP are objective, decomposition, comparison and synthesis of priorities [31]. The steps followed in applying the AHP model is depicted in figure 8.

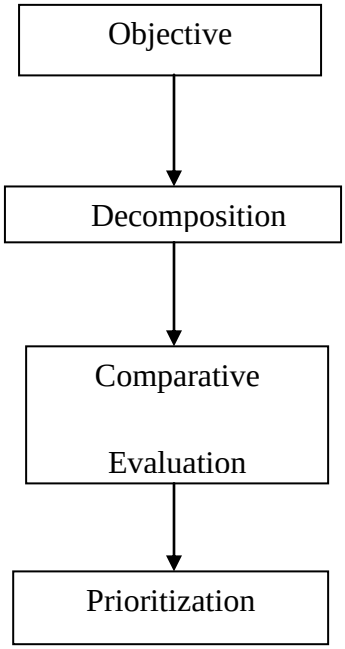

Figure 8 Steps in AHP application

1.1 Decomposition

The decomposition of a problem refers to the setting up of hierarchy of the problem. The hierarchy of the process is basically one way of structuring the problem. Structuring of a problem helps us visualize the different factors and elements involved in the problem in a logical way and draw our conclusions based on it. The hierarchy represents all the elements/factors that are involved in the decision making process. Usually the process of structuring involves the identification of problem, the elements involved in the problem, requirement and criteria, actions, actors and alternatives available and then this is followed by clustering to bring homogeneity by level [36].

The science behind the creation of hierarchy in AHP is explained by T.L Saaty in his book fundamentals of decision making [37] through several axioms concerning the

hierarchy formation. Two most important axioms considered during the formation of hierarchy are described in brief below.

Axiom 1- Let H be a partially ordered set with largest element 'b', now H is considered to be an hierarchy if and only if it satisfies the following mathematical conditions

There is a partition of H into sets L_k ; where k = 1,2 … ,h and L1= 'b'

If $x \in L_k$ it implies that $x- \subset L_{k+1}$; where k = 1,..,h-1

If $x \in L_k$ it implies that $x+ \subset L_{k-1}$; where k = 2,..,h

The interpretation of these axioms is mentioned in [35] and conveys the following, from the first condition we have that objective or goal must be placed at the first level of a hierarchy. The second condition can be explained in technical terms as, if x (which may be criteria, sub criteria or alternative) belongs to particular level then the all the subsets of x must belong to level k+1 i.e. the next level. By this axiom if we place criteria at level to of a hierarchy then the sub criteria's must be place at level 3 of the hierarchy. The third condition is similar to that of second condition; according to it if x refers to sub criteria and is placed at level three then criteria must be placed at level two.

Axiom 2 - Given an hierarchy H, $x \in H$ and $x \in Lk \subset H$ then $x- \subset Lk+1$ is ρ homogenous for all k = 1,.., h-1 [39].

This axiom states that an element must be placed in a particular hierarchy in such a way that it is comparable with the other elements present at that level. Hence the

criteria, sub criteria and alternatives all should be placed in different levels and should never be mixed [35].

Though hierarchy structure can be formed in different ways the basic steps involved as described by T.L Saaty in [36] are

Definition of goal – This forms the focal point of our structure, this is analogous to the mission or vision statement in an organization.

Breaking down of the problem – the problem is decomposed in the same way a system is decomposed into sub systems components etc. The problem can be decomposed based on their function, time horizon, etc.

Establishment of end points or bottom levels – The bottom level usually consists of alternatives to choose from which when implemented should solve the problem considered.

Check for completeness and consistency of architecture – This can be done by making sure that the established structure fulfills the hierarchy axioms stated above. A hierarchical structure is usually checked by making sure the flow of logic remains the same from top to bottom.

An example of a typical hierarchical structure used in an AHP is shown in figure 9. It illustrates a hierarchy for deciding whether the water in the dam must be kept at half its level or should the dam must be full. Here the hierarchy consist of seven levels i.e. k =7 as per the axiom. The problem has been decomposed based on the cause and effect situation. Also all the criteria at each level are comparable with one another hence

ensuring a logical flow of information. Since the hierarchy illustrated satisfies both the axioms it could be considered as a complete hierarchy and we can proceed to the next step that is pair wise comparison.

1.2 Comparative Evaluation

In mathematics two kinds of measurement topologies exist, metric topology and order topology. While the metric topology is concerned with measuring how much of an attribute an element has. Order topology is more concerned with the measurement of dominance of one element over another with respect to a particular attribute. The outcomes are in form of priorities instead of absolute values. [40]

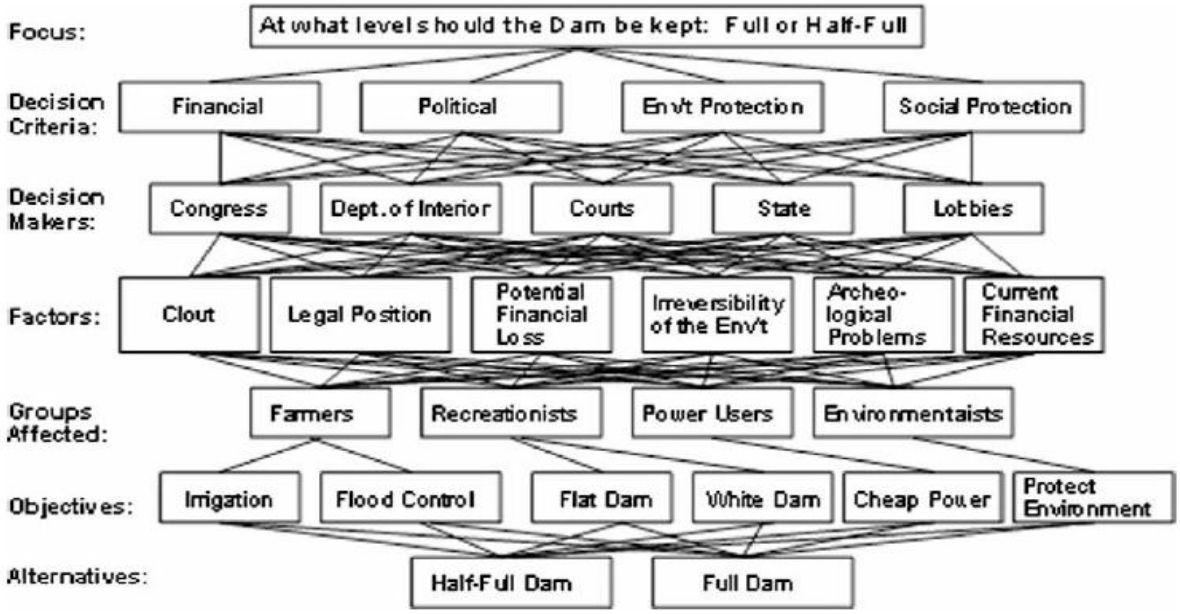

Figure 9 Hierarchy level to decide the water level in the Dam [36].

In AHP we make use of order topology for the purpose of decision making. This is achieved by using pair wise comparison, where in each attribute relative importance with another is determined with respect to a higher goal. Here the number derived from

comparison of one element with another is specific to the particular attribute/situation and cannot be generalized. This is preferred because the importance of an element changes with respect to the environment and is not stable in a dynamic environment. Also this enables us to capture the influence of one element over the other and offers greater flexibility; in the sense both tangibles and non tangibles can be measured and expressed in this way [40].

Usually we use a fundamental scale as depicted in table 4 for the purpose of relative measurement. This scales indicate the ratio of weight of one element over another, ie if w_i and w_j are the weights of two elements, the pair wise comparison gives their dominance in terms of ratio of (w_i / w_j) [35].

The ratio scales are then represented in the form of relationship matrix which is essentially a reciprocal matrix. This matrix is then synthesized to obtain a list of priorities which will be explained in the following section. The matrixes are formed in accordance with certain axioms explained by T.L Saaty in his book fundamentals of decision making [37].

Axiom 3 – for all Ai , Aj $\in$ A and c $\in$ C

Pc(Ai , Aj) = 1/ Pc(Aj , Ai)

Pc represents the intensity or strength of preference of one alternative over another.

\

Table 4 Fundamental scale of measurement for pair wise comparison [38].

Intensity of Importance	Definition	Explanation
1	Equal Importance	Two activities contribute equally to a objective
2	Weak	
3	Moderate Importance	Experience and judgment slightly favor one activity over another
4	Moderate Plus	
5	Strong Importance	Experience and judgment strongly favor one activity over another
6	Strong plus	
7	Very Strong	Experience and judgment very strongly favor one activity over another
8	Very Very strong	
9	Extreme Importance	One activity favoring over another is of extreme order of importance
1.1-1.9	When activities are very close a decimal is added to 1 to show their difference as appropriate	A better alternative way to assigning the small decimals is to compare two close activities with other widely contrasting ones, favoring the larger one a little over the smaller one when using the 1–9 values.
Reciprocals of above	When activity i has one of the above values WRT to j then j has a reciprocal value when compared to i	A logical assumption
Measurements from ratio scale		When it is desired to use such numbers in physical applications. Alternatively, often one estimates the ratios of such magnitudes by using judgment

This axiom states that a relationship matrix derived through pair wise comparison of one element over another must essentially form a reciprocal matrix. This is simply another way of stating if A is 5 times more dominant than B then B is 1/5 times dominant than B [28].

1.3 Synthesization of Priorities

Priorities refer to the order of preference of the alternatives or attributes obtained after pair wise comparison of the elements. Though there are many ways of prioritization the Eigen value method is the most efficient of all as it can deal with both consistent and inconsistent matrix obtained from the pair wise comparison. The inconsistency may occur due to the loss in one or more of the properties of reflexivity, transitivity and asymmetric nature. The use of Eigen value method enables the AHP to accommodate inconsistency in judgment.

To elucidate the use eigen vector consider a situation where in we compare n different alternatives of different weight w1, w2, ….,wn. If A denotes the consistent reciprocal matrix and W represent the weight, the corresponding weight matrix can be recovered from equation as represented below [28].

$$A W = n W \qquad - (2.1)$$

This is clearly the case of eigen value problem where in n represents the eigen value leading to the conclusion that W is the eigen vector. Also since A is a constant multiple matrix and also the fact that its trace equals the order n, we have n as the principle Eigen vector of A. Now the values of n are normalized to convert the values

obtained in the ratio scale into absolute scale. This however describes an ideal case, whereas in real life situations the pair wise matrix are usually inconsistent.

Also from Saaty's axioms described in [38] we know that when considering an inconsistent matrix say A' the above equation becomes

$$A'W' = \lambda'max\ W'. \qquad – (2.2)$$

Here A' is consistent if and only if $\lambda'max = n$ and it is proved that we always have $\lambda'max \geq n$. Here the weight W' obtained contains positive elements and it is unique with multiplicative components. To check whether the judgment is consistent or not we calculate the consistency index and consistency ratio as shown below. If the values obtained fall below the prescribed threshold value the judgment is accepted.

$$CI\ (\text{consistency index}) = (\lambda'max - n)/\ (n-1) \qquad - (2.3)$$

$$CR\ (\text{consistency ratio}) = CI/\ RI \qquad - (2.4)$$

RI – random index

Table 5 Random index tables [39]

1	2	3	4	5	6	7	8	9	10	11	12	13	14	15
0.00	0.00	0.58	0.90	1.12	1.24	1.32	1.41	1.45	1.49	1.51	1.48	1.56	1.57	1.59

The weights obtained after establishment of relative matrix are normalized for the purpose of translating the ratio scales into absolute scales. Normalization also helps us to capture the fleeting transitivity in the judgments made [40].

The alternative which has the highest priority number is chosen as the solution for the problem concerned. Here again the stability of ranking depends on the kind of measurement used in comparison of alternatives. If we use relative measurement the rank changes with change in the quantity and quality of the attributes and alternatives. If we want an idealistic measure where there are no rank reversals than an absolute mode of measurement must be utilized.

2 AHP in Process Selection

This section describes the application of AHP tool in selection of the most appropriate alternative manufacturing process from among the alternatives considered. The hierarchical structure of AHP in this case consists of three levels as shown below in figure 10 where in the attributes were obtained from the QFD analysis performed and described in [41].

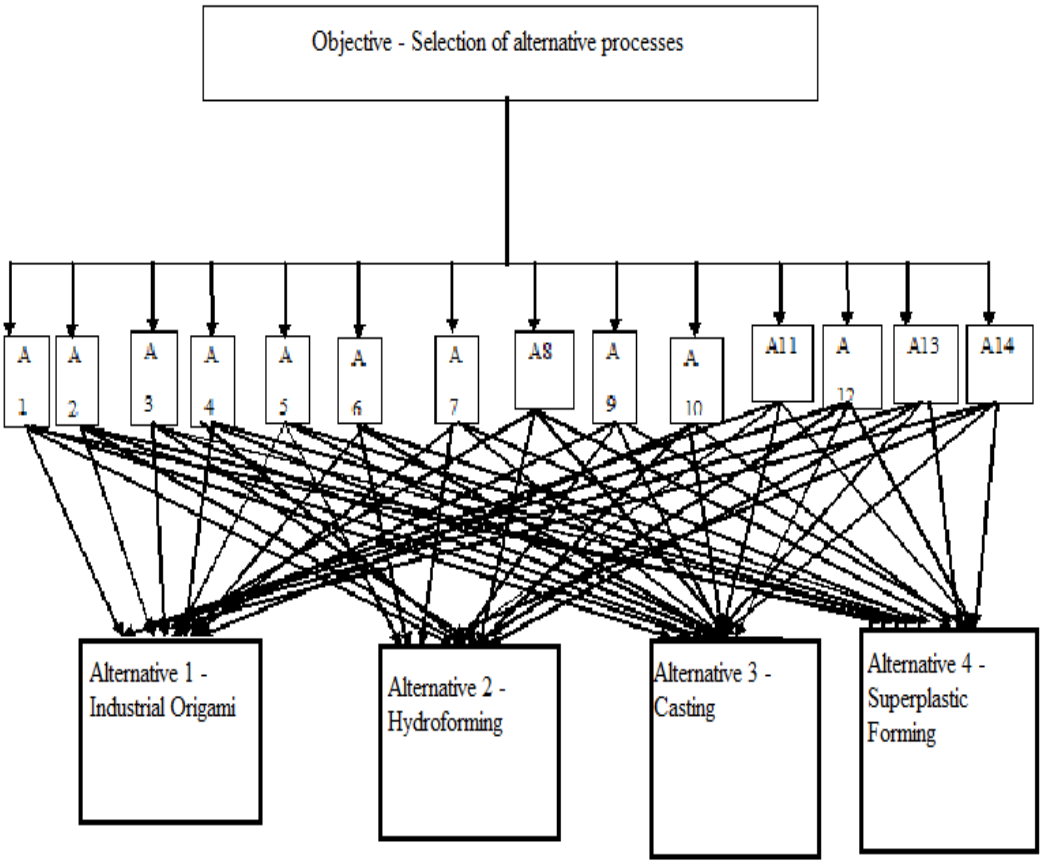

Figure 10 Hierarchy structure used for the purpose of process selection

2.1 Objective

The objective here is to determine the alternative best suited to replace the stamping process in order to reduce the production cost and weight of the body structure. This leads us into identifying the different attributes that a manufacturing process must possess to achieve the objective.

2.2 Attributes

The selection of the most suitable manufacturing process depends on some of this attributes. Of all the considered attributes only some are related with the process selection. The others were considered and prioritized as they were needed for designing a

systems manufacturing unit on the whole. The attributes affecting the manufacturing process selection are described below.

2.2.1. Reduction in number of components

One of the main requirements for the reduction in cost as well as lead time is reduction in the total number of components forming the part. An example of how a process could affect the total number of components is shown in the figure 11.

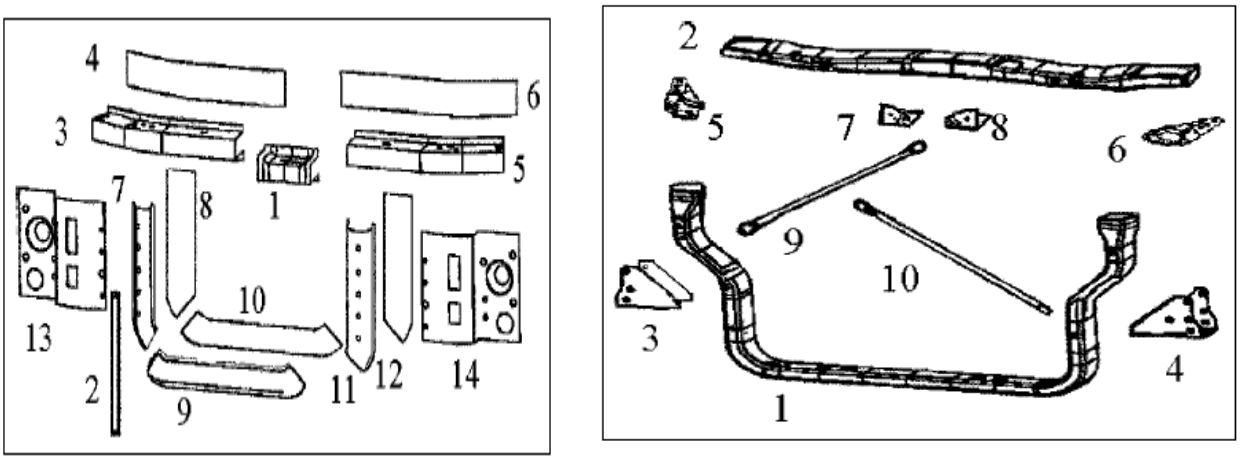

a) Stamped radiator assembly b) Hydroformed radiator assembly

Figure 11 Stamped assembly vs. Hydroformed assembly [42]

Figure 11 shows the comparison between a stamped radiator assemblies of Dodge Dakota. As can be seen the number of components required in the case of hydroforming is just 10 compared against that of stamped assembly where 14 parts were required. This consequentially leads to a reduction in both cost and mass of the assembly.

2.2.2 Use of Modular structure

Modularization refers to the use of modules for the creation of part. Modules are functional blocks that can be described functionally and physically and are essentially

independent [43]. It is a very efficient tool for the purpose of mass customization. While comparing this attribute with the alternatives we check for the ease of creating modular structures. The increase in modularity usually increases the complexity and the number of parts to be produced. Hence the process selected must be able to achieve complex shape and at the same time try to minimize the number of components in the module.

2.2.3 Reduction in Changeover / Setup time

In an environment of mass customization a decrease in changeover and setup time plays a crucial role in the reduction of production lead time. With increase in the number of dies required the changeover time and the setup time increases. This also depends on the number of process required for the creation of the same object. This can again be illustrated by taking the example of radiator assembly depicted in figure 11 wherein only 10 parts have to be joined as against 14 thus bringing about a reduction in lead time. Process such as hydroforming and superplastic forming make use of single dies thus reducing the complexity in die changing process.

2.2.4 Common Platform

The concept of common platform refers to the idea of having a common base on which the entire model could be built up on. Instead of assembling all the parts together one by one having it done on a common base aids in mass customization as well as in reduction of time. In case of our system manufacturing concept we use the chassis as a common platform for building of BIW. Here the role of the alternatives in manufacturing of this common platform and their ability to be reconfigured to incorporate small changes

are evaluated. The work done by the auto steel partnership described in their work [44] is highly relevant and has been used as an guide way.

2.2.5 Uniformity in Material Selection

This was introduced after considering the case study of manufacturing of Honda NSX as described in [7] where in tough the expected weight reduction and other performance objectives were achieved, lot of modifications had to be made to the process variables to make a full aluminum BIW. For example the twice the over crowning allowance was needed compared to that of steel. Again considering the welding process for this BIW welding current of up to 50k amps was used against that of steel BIW which used only 12k amps. Also adjustments had to be made for greater springback which necessitated a system re design.

Again while using a mixture of material changeover and reconfiguration becomes necessary hence, to reduce design complication and reduce lead time it is better to use a uniform material. The greatest disadvantage with this is that while some regions may require more thickness while others don’t need that much of material. Hence we look for process which has the capability of producing a part with varying dimensions and complexities. For example the relatively new viscous pressure forming technique is intended to form sheets of various thicknesses and other difficult to form materials [17].

2.2.6 Reducing Variability in Dimension

Variability in dimension increases the number of components thereby increasing the lead time and cost. Variation in dimension arises as different parts in a body structure require different stress bearing capacities. For example in a door panel the hinges require

more load bearing capacity than the other parts. Some process like hydroforming induces work hardening properties into the sheet metal parts thus increasing the yield strength of the sheet metal. In such case low grade material (also cheaper) could be used for load bearing purposes thus bringing about a reduction in part number.

2.2.7 Reduction in Number of Process Parameters

An increase in number of process parameters increases the complexity of the operation. For example consider the casting process, here the process control variables involves composition, temperature of melt and mould, speed of filling, quality of mould/die , shrinkage and thermal patterns etc [20]. Such a high number of process variables reduce the ease and reliability of a process. Also reconfiguration of such a process becomes difficult as all the parameters need to be addressed.

2.2.8 Concurrent Operations

Concurrent engineering is a tool in itself for the reduction of lead time and cost. It is a methodology in systems engineering wherein process such as product design, process planning, manufacturing decisions are carried out simultaneously. This has been described in [45] with an example of mold manufacturing. In our AHP we check for the possibility of simultaneous operation in a process and the positive effect and potential of concurrent systems design. For example in case of superplastic forming as described in [46] one of the ways to reduce the production lead time is by controlling the upstream and downstream activities, which again depends on the production volume. Also in hybrid superplastic forming process both stamping and superplastic forming can be carried out simultaneously.

2.2.9 Reduction in Intercell and Intracell Distance

Intercell and Intracell distance depend on the process layout and type of grouping technology preferred. Here attributes and alternatives were compared under the assumption that grouping has been done per process. In such a case the Intracell distance in a cell depends on the number of process before the final product is formed. The numbers of process for SPF, hydroforming and origami have been determined from the works [46], [42] and [47] respectively.

2.2.10 Production Volume

Production volume plays the most important role in selection of alternatives as this cannot be compromised with and all other attributes and alternatives are adjusted to suit this. For the purpose of our research a total annual production of 100,000 BIW is considered. This falls under the category of medium volume production. Factors affecting the process capabilities for high volume production were frequency of tool change required, investment in tooling, cycle time, changes required for increasing cycle time.

2.2.11 Surface Finish

Surface finish becomes a highly essential requirement for class A surfaces. In such cases only those process capable of producing such a high quality parts in the least number of operation, lead time and cost is preferred. For example machining becomes essential for casting process if a cast part falls under class A surface. Because of the presence of smiles on parts produced through the process of industrial origami it cannot be used as a class A surface.

2.2.12 Optimized Alignment of Raw Material

This essentially refers to the nesting of blanks of sheet metal going into the process in such a way as to reduce scrap and also to increase the opportunity for simultaneous forming process.

2.2.13 Open architecture control

Open architecture control enables better automation of the process while possessing the potential to be reconfigured when required depending on the situation. For example in the present day factories applying flexible manufacturing principles the automation and control process is done through software that is fixed or static in nature as here only part programs can be changed while the software architecture cannot be changed [47]. This greatly reduces the capability of the system to be reconfigured to suit the market demands. Here we try to assess the ability of the process to be automated and the associated effects. For example automation of superforming plastic would be a complex process due to the need for handling pre heated sheets there by increasing the cost. The process of automation of hydroforming is relatively simpler when compared to that of superforming and casting.

2.2.14 Avoiding intricate shapes

As described in [46] when an aluminum door is formed using superplastic forming enables the production of door as a single part there by reducing the number of parts to be assembled together and at the same time doing away with complex parts. This cannot be achieved with the use of industrial origami where in the radius of bend cannot

be too small. Hence we try to assess the ability of the process to remove unneeded complexities but at the same time be able to achieve those complexities when required.

2.3 Alternatives

The alternatives here describe the processes that have the potential to replace stamping as the major forming process. This section gives a brief description about such process.

2.3.1 Industrial Origami

“The patented Industrial Origami Precision Fold Technology is based on the creation of fold defining geometries which, when put into sheet metal, enable structure and innovative shapes never before possible with traditional technologies. These features called "smiles", control the folding and are responsible for the accurate folding properties embedded in the sheet metal”[47]. Some of the advantages are that it posses great accuracy, and can be used on steel, aluminum, plastic and composites. It can also be used for a wide range of thickness. It makes use of existing tooling to stamp or cut features on to the blanks.

The main disadvantage of this process is that it has poor load bearing capability. This was further investigated and ascertained by running analysis of origami samples for various thicknesses. Also it does not have the potential of completely replacing the stamping process.

2.3.2 Hydroforming

Hydro-forming has gained acceptance as a forming technology in many automotive and non automotive components. It makes use of the forces of fluids to shape parts. The main advantages of hydro-forming over that of conventional stampings are that 1) higher quality 2) lower cost 3) ease of forming complex shape 4) reduction in number of parts and better tolerance control. The main disadvantage of the hydroforming process is its high cycle time. At times the cycle time of a hydroforming process tends to be twice that of a stamping process [17].

2.3.3 Superplastic Forming

Superplastic forming is a metal forming process which is used to shape metals using the theory of super plasticity. Certain aluminum and magnesium alloys exhibit superplastic behavior by virtue of which they can be stretched to nearly 300-500% of their original length. This stretching is a slow and gradual process due to which the cycle times involved in superplastic forming is high. This has limited super plastic forming to low volume applications like that of aerospace industry and specific light weight automotive applications. Moreover we would require specialized processed raw materials (aluminum alloys) which have been processed to obtain a very fine grain size. This specialized raw material requirement adds an additional cost to the product compared to regular aluminum or steel. On the flip side superplastic forming boasts of superior surface finish and gives the designer considerable design freedom in the case of consolidation of parts. For example an aluminum door panel which previously consisted of 4 stamped

panels is now made using a single super plastic forming operation. Issues like springback are also eliminated by the usage of superplastic forming [46].

2.3.4 Casting

In a casting process the molten material is poured into a die cavity possessing the negative shape of a required component and allowed to solidify. The solidified part represents the needed component.

The main advantages of using castings are: design flexibility, part number reduction by consolidation of fabricated parts into single components, near net shape production process. The main disadvantage of casting is the huge volume of scrap produced. Also there are too many variables to be controlled for achieving a high level of reliability [20].

2.4 Comparative Evaluation

In this section the steps followed in the pair wise comparison of the attributes, and the comparison involving alternatives and attributes are described.

2.4.1 Attributes Comparison

The attributes identified from the QFD process are compared with each other and assigned relative weights with respect to each other as shown in table 6.

Table 6 Attributes Comparison.

	Reduction in NO of components	Reduction in changeover time	uniformity in material selection	Reducing variablity in dimensions	Avoiding intricate shapes	Reduction in number of process parameters	Common platform	Open architecture control	Optimized alignment of raw material	use of modular structures	Consolidation of parts	Concurrent operations	Reducing the intercell and intracell distance	production Volume	Surface Finish
Reduction in NO of components	1.00	5.00	5.00	5.00	3.00	3.00	3.00	7.00	7.00	3.00	3.00	5.00	5.00	0.20	3.00
Reduction in changeover time	0.20	1.00	3.00	3.00	3.00	3.00	5.00	5.00	5.00	0.33	0.33	3.00	5.00	0.33	0.33
uniformity in material selection	0.20	0.33	1.00	3.00	3.00	5.00	3.00	5.00	5.00	0.20	0.33	0.33	3.00	0.33	0.33
Reducing variablity in dimensions	0.20	0.33	0.33	1.00	3.00	3.00	0.20	3.00	3.00	0.20	0.33	3.00	3.00	0.33	0.33
Avoiding intricate shapes	0.33	0.33	0.33	0.33	1.00	3.00	0.20	3.00	3.00	0.14	0.20	3.00	3.00	0.20	0.33
Reduction in number of process parameters	0.33	0.33	0.20	0.33	0.33	1.00	0.33	3.00	3.00	0.20	0.20	3.00	3.00	0.33	0.33
Common platform	0.33	0.20	0.33	5.00	5.00	3.00	1.00	5.00	5.00	0.20	0.33	3.00	5.00	0.33	0.33
Open architecture control	0.14	0.20	0.20	0.33	0.33	0.33	0.20	1.00	3.00	0.14	0.20	3.00	0.33	0.20	0.20
Optimized alignment of raw material	0.14	0.20	0.20	0.33	0.33	0.33	0.20	0.33	1.00	0.14	0.20	0.33	0.33	0.20	0.20
Use of modular structure	0.33	3.00	5.00	5.00	7.00	5.00	5.00	5.00	7.00	1.00	3.00	7.00	5.00	0.33	3.00
Consolidation of parts	0.33	3.00	3.00	3.00	5.00	5.00	3.00	5.00	5.00	0.33	1.00	5.00	5.00	0.33	3.00
Concurrent operations	0.20	0.33	3.00	0.33	0.33	0.33	0.33	0.33	3.00	0.14	0.20	1.00	0.33	0.20	0.20
Reduction in the intra cell and intercell distance	0.20	0.20	0.33	0.33	0.33	0.33	0.20	3.00	3.00	0.20	0.20	3.00	1.00	0.20	0.20
Production Volume	5.00	3.00	3.00	3.00	5.00	3.00	3.00	5.00	5.00	3.00	3.00	5.00	5.00	1.00	3.00
Surface Finish	0.33	3.00	3.00	3.00	3.00	3.00	3.00	5.00	5.00	0.33	0.33	5.00	5.00	0.33	1.00

The attributes are prioritized in the next step after normalization of the values, as this would ensure the consistency of the weights assigned. A consistency check is also carried out to determine whether the judgments made are consistent. This process is shown in table 7.

2.4.2 Alternatives Comparison

The alternatives are compared with each other in a pair wise form with respect to each and every attribute prioritized in the preceding step. Here again the weights are given in the first step and then normalized for the purpose of consistency. An example of such a comparison is shown in the table 8 and table 9.

Table 7 Normalizing and Prioritizing of Alternatives along with the consistency check.

	Reduction in NO of components	Reduction in changeover time	uniformity in material selection	Reducing variablity in dimensions	Avoiding intricate shapes	Reduction in number of process parameters	Common platform	Open architecture control	Optimized alignment of raw material	use of modular structures	Consolidation of parts	Concurrent operations	Reducing the intercell and intracell distance	Production Volume	Surface Finish	Average	X1	λ	Ranking
Reduction in NO of components	0.11	0.24	0.18	0.15	0.08	0.08	0.11	0.13	0.11	0.31	0.23	0.10	0.10	0.04	0.19	0.1441	2.80	19.43	2
Reduction in changeover time	0.02	0.05	0.11	0.09	0.08	0.08	0.18	0.09	0.08	0.03	0.03	0.06	0.10	0.07	0.02	0.0724	1.40	19.28	6
uniformity in material selection	0.02	0.02	0.04	0.09	0.08	0.13	0.11	0.09	0.08	0.02	0.03	0.01	0.06	0.07	0.02	0.0568	1.05	18.40	8
Reducing variablity in dimensions	0.02	0.02	0.01	0.03	0.08	0.08	0.01	0.05	0.05	0.02	0.03	0.06	0.06	0.07	0.02	0.0400	0.69	17.33	9
Avoiding intricate shapes	0.04	0.02	0.01	0.01	0.03	0.08	0.01	0.05	0.05	0.01	0.02	0.06	0.06	0.04	0.02	0.0334	0.58	17.27	10
Reduction in number of process param	0.04	0.02	0.01	0.01	0.01	0.03	0.01	0.05	0.05	0.02	0.02	0.06	0.06	0.07	0.02	0.0310	0.52	16.86	11
Common platform	0.04	0.01	0.01	0.15	0.13	0.08	0.04	0.09	0.08	0.02	0.03	0.06	0.10	0.07	0.02	0.0612	1.09	17.80	7
Open architecture control	0.02	0.01	0.01	0.01	0.01	0.01	0.01	0.02	0.05	0.01	0.02	0.06	0.01	0.04	0.01	0.0189	0.32	16.71	14
Optimized alignment of raw material	0.02	0.01	0.01	0.01	0.01	0.01	0.01	0.01	0.02	0.01	0.02	0.01	0.01	0.04	0.01	0.0124	0.22	17.43	15
Use of modular structure	0.04	0.15	0.18	0.15	0.18	0.13	0.18	0.09	0.11	0.10	0.23	0.14	0.10	0.07	0.19	0.1360	2.64	19.38	3
Consolidation of parts	0.04	0.15	0.11	0.09	0.13	0.13	0.11	0.09	0.08	0.03	0.08	0.10	0.10	0.07	0.19	0.0992	1.89	19.08	4
Concurrent operations	0.02	0.02	0.11	0.01	0.01	0.01	0.01	0.01	0.05	0.01	0.02	0.02	0.01	0.04	0.01	0.0233	0.44	18.99	13
Reduction in the intra cell and intercell	0.02	0.01	0.01	0.01	0.01	0.01	0.01	0.05	0.05	0.02	0.02	0.06	0.02	0.04	0.01	0.0233	0.39	16.84	12
Production volume	0.54	0.15	0.11	0.09	0.13	0.08	0.11	0.09	0.08	0.31	0.23	0.10	0.10	0.21	0.19	0.1673	3.18	18.98	1
Surface Finish	0.04	0.15	0.11	0.09	0.08	0.08	0.11	0.09	0.08	0.03	0.03	0.10	0.10	0.07	0.06	0.0805	1.54	19.09	5
λ_{m}																		18.19	

Table 8 Comparison of Alternatives With Respect To Reduction in Number of Components

Reduction in No of components				
	Origami	Hydroformin	Casting	Superplastic forming
Origami	1.00	0.50	0.25	0.33
Hydroforming	2.00	1.00	0.50	0.50
Casting	4.00	2.00	1.00	2.00
Super plastic forming	3.00	2.00	0.50	1.00

Table 9 Normalization, Prioritization and consistency check

	Origami	Hydroformi	Casting	Superplastic forming	Average	x	λ
Origami	0.11	0.12	0.21	0.07	0.13	0.52	4.05
Hydroforming	0.54	0.60	0.50	0.64	0.57	2.38	4.19
Casting	0.04	0.09	0.07	0.07	0.07	0.27	4.08
super plastic forming	0.32	0.20	0.21	0.21	0.24	1.01	4.25
						λ_n	4.14
						CI	0.05
						RI	0.90
						CR	0.05

The tables 10 – 37 depict the pairwise evaluation of alternatives with respect to the corresponding attributes described in section 2.2.

Table 10 Pairwise comparison with respect to modularization

Fabrication/Manufacturing of modular structures				
	Origami	Hydroforming	Casting	superplastic forming
Origami	1.00	0.25	3.00	0.33
Hydroforming	4.00	1.00	3.00	2.00
Casting	0.33	0.33	1.00	0.50
Superforming plastics	3.00	0.50	2.00	1.00

Table 11 Prioritization of the values depicted in table 10

	Origami	Hydroforming	Casting	superplastic forming	Average	x	λ
Origami	0.12	0.12	0.33	0.09	0.1651	0.70	4.24
Hydroforming	0.48	0.48	0.33	0.52	0.4538	1.99	4.38
Casting	0.04	0.16	0.11	0.13	0.1104	0.45	4.10
Superforming plastics	0.36	0.24	0.22	0.26	0.2708	1.21	4.48
						λ_n	4.30
						CI	0.10
						RI	0.90
						CR	0.11

Table 12 Pairwise comparison with respect to part consolidation

Consolidation of parts				
	Origami	Hydroforming	Casting	superplastic forming
Origami	1.00	0.33	0.25	0.50
Hydroforming	3.00	1.00	0.50	2.00
Casting	4.00	2.00	1.00	0.33
Superforming plastics	2.00	0.50	3.00	1.00

Table 13 prioritization of values depicted in table 12

	Origami	Hydroforming	Casting	superplastic forming	Average	x	λ
Origami	0.10	0.09	0.05	0.13	0.0925	0.42	4.55
Hydroforming	0.30	0.26	0.11	0.52	0.2970	1.34	4.51
Casting	0.40	0.52	0.21	0.09	0.3048	1.37	4.50
Superforming plastics	0.20	0.13	0.63	0.26	0.3057	1.55	5.08
						λ_n	4.66
						CI	0.22
						RI	0.90
						CR	0.24

Table 14 Pairwise comparison with respect to reduction in changeover time

Reduction in changeover time/setup time				
	Origami	Hydroformin	Casting	superplastic forming
Origami	1.00	3.00	5.00	3.00
Hydroforming	0.33	1.00	3.00	0.50
Casting	0.20	0.33	1.00	0.25
Superforming plastics	0.33	2.00	4.00	1.00

Table 15 Prioritization of the values depicted in table 14

	Origami	Hydroformin	Casting	superplastic forming	Average	x	λ
Origami	0.54	0.47	0.38	0.63	0.5064	2.13	4.21
Hydroforming	0.18	0.16	0.23	0.11	0.1681	0.68	4.05
Casting	0.11	0.05	0.08	0.05	0.0723	0.29	4.05
Superforming plastics	0.18	0.32	0.31	0.21	0.2531	1.05	4.14
						λ_n	4.11
						CI	0.04
						RI	0.90
						CR	0.04

Table 16 Pairwise comparison of the alternatives with respect to common platform

Common Platform				
	Origami	Hydroformin	Casting	superplastic forming
Origami	1.00	0.20	0.50	0.33
Hydroforming	5.00	1.00	3.00	4.00
Casting	2.00	0.33	1.00	2.00
Superforming plastics	3.03	0.25	0.50	1.00

Table 17 Prioritization of values depicted in table 16

	Origami	Hydroformin	Casting	superplastic forming	Average	x	λ
Origami	0.09	0.11	0.10	0.05	0.0870	0.35	4.07
Hydroforming	0.45	0.56	0.60	0.55	0.5399	2.26	4.18
Casting	0.18	0.19	0.20	0.27	0.2103	0.89	4.23
Superforming plastics	0.27	0.14	0.10	0.14	0.1628	0.67	4.09
						λ_n	4.14
						CI	0.05
						RI	0.90
						CR	0.05

Table 18 Pairwise comparison of the alternatives with respect to Uniformity in material selection

Uniformity in material selection				
	Origami	Hydroformin	Casting	superplastic forming
Origami	1.00	0.33	2.00	0.50
Hydroforming	3.00	1.00	5.00	2.00
Casting	0.50	0.20	1.00	0.50
Superforming plastics	2.00	0.50	2.00	1.00

Table 19 Prioritization of the values depicted in table 18

	Origami	Hydroformin	Casting	superplastic forming	Average	x	λ
Origami	0.15	0.16	0.20	0.13	0.1607	0.65	4.04
Hydroforming	0.46	0.49	0.50	0.50	0.4883	1.97	4.04
Casting	0.08	0.10	0.10	0.13	0.1001	0.40	4.03
Superforming plastics	0.31	0.25	0.20	0.25	0.2509	1.02	4.05
						λ_n	4.04
						CI	0.01
						RI	0.90
						CR	0.02

Table 20 Pairwise comparison of the alternatives with respect to reduction in variability in dimension

Reducing Variablity in Dimension				
	Origami	Hydroformin	Casting	superplastic forming
Origami	1.00	0.20	3.00	0.33
Hydroforming	5.00	1.00	3.00	3.00
Casting	0.33	0.33	1.00	0.33
Superforming plastics	3.00	0.33	3.00	1.00

Table 21 Prioritization of values depicted in table 20

	Origami	Hydroformin	Casting	superplastic forming	Average	x	λ
Origami	0.11	0.11	0.30	0.07	0.1464	0.62	4.24
Hydroforming	0.54	0.54	0.30	0.64	0.5036	2.29	4.54
Casting	0.04	0.18	0.10	0.07	0.0964	0.40	4.12
Superforming plastics	0.32	0.18	0.30	0.21	0.2536	1.15	4.54
						λ_n	4.36
						CI	0.12
						RI	0.90
						CR	0.13

Table 22 Pairwise comparison of the alternatives with respect to avoiding intricate shapes

Avoiding intricate shapes				
	Origami	Hydroformin	Casting	Superforming plastics
Origami	1.00	0.33	0.50	0.25
Hydroforming	3.00	1.00	3.00	0.33
Casting	3.00	0.33	1.00	0.20
Superforming plastics	4.00	3.00	5.00	1.00

Table 23 Prioritization of values depicted in table 22

	Origami	Hydroforming	Casting	Superforming plastics	Average	x	
Origami	0.09	0.07	0.05	0.14	0.0888	0.37	4.19
Hydroforming	0.27	0.21	0.32	0.19	0.2474	1.11	4.48
Casting	0.27	0.07	0.11	0.11	0.1404	0.59	4.23
Superforming plastics	0.36	0.64	0.53	0.56	0.5234	2.32	4.44
						λ_n	4.34
						CI	0.11
						RI	0.90
						CR	0.12

Table 24 Pairwise comparison of the alternatives with respect to reduction in number of process parameters

Reduction in number of process parameters				
	Origami	Hydroforming	Casting	superplastic forming
Origami	1.00	3.00	5.00	3.00
Hydroforming	0.33	1.00	5.00	3.00
Casting	0.20	0.20	1.00	0.33
Superforming plastics	0.33	0.33	3.00	1.00

Table 25 Prioritization of values depicted in table 24

	Origami	Hydroforming	Casting	superplastic forming	Average	x	λ
Origami	0.54	0.66	0.36	0.41	0.4909	2.15	4.38
Hydroforming	0.18	0.22	0.36	0.41	0.2913	1.24	4.26
Casting	0.11	0.04	0.07	0.05	0.0670	0.27	4.08
Superforming plastics	0.18	0.07	0.21	0.14	0.1507	0.61	4.07
						λ_n	4.20
						CI	0.07
						RI	0.90
						CR	0.07

Table 26 Pairwise comparison of the alternatives with respect to concurrent operations

Concurrent Operations				
	Origami	Hydroformin	Casting	superplastic forming
Origami	1.00	0.33	2.00	0.33
Hydroforming	3.00	1.00	5.00	3.00
Casting	0.50	0.20	1.00	0.33
Superforming plastics	3.00	0.33	3.00	1.00

Table 27 Prioritization of values depicted in table 26

	Origami	Hydroformin	Casting	superplastic forming	Average	x	λ
Origami	0.13	0.18	0.18	0.07	0.1413	0.57	4.02
Hydroforming	0.40	0.54	0.45	0.64	0.5083	2.15	4.23
Casting	0.07	0.11	0.09	0.07	0.0840	0.35	4.11
Superforming plastics	0.40	0.18	0.27	0.21	0.2664	1.11	4.17
						λ_n	4.13
						CI	0.04
						RI	0.90
						CR	0.05

Table 28 Pairwise comparison of the alternatives with respect to reduction in intercell and Intracell distance

Reduction in intercell and intracell distance				
	Origami	Hydroformin	Casting	superplastic forming
Origami	1.00	0.50	0.20	0.33
Hydroforming	2.00	1.00	0.33	0.33
Casting	5.00	5.00	1.00	3.00
Superforming plastics	3.00	3.00	0.33	1.00

Table 29 Prioritization of values depicted in table 28

	Origami	Hydroformin	Casting	superplastic forming	Average	x	λ
Origami	0.09	0.05	0.11	0.07	0.0805	0.34	4.19
Hydroforming	0.18	0.11	0.18	0.07	0.1343	0.56	4.15
Casting	0.45	0.53	0.54	0.64	0.5399	2.35	4.35
Superforming plastics	0.27	0.32	0.18	0.21	0.2453	1.07	4.36
						λ_n	4.26
						CI	0.09
						RI	0.90
						CR	0.10

Table 30 Pairwise comparison of the alternatives with respect to open architecture control

Open Architecture control				
	Origami	Hydroformin	Casting	Superforming plastics
Origami	1.00	0.33	3.00	0.33
Hydroforming	3.00	1.00	5.00	0.33
Casting	0.33	0.20	1.00	0.33
Superforming plastics	3.00	3.00	3.00	1.00

Table 31 Prioritization of values depicted in table 30

	Origami	Hydroformin	Casting	Superforming plastics	Average	x	
Origami	0.14	0.07	0.25	0.17	0.1566	0.66	4.24
Hydroforming	0.41	0.22	0.42	0.17	0.3033	1.35	4.45
Casting	0.05	0.04	0.08	0.17	0.0849	0.35	4.12
Superforming plastics	0.41	0.66	0.25	0.50	0.4552	2.09	4.59
						λ_n	4.35
						CI	0.12
						RI	0.90
						CR	0.13

Table 32 Pairwise comparison of the alternatives with respect to production volume

Production Volume				
	Origami	Hydroformin	Casting	superplastic forming
Origami	1.00	3.00	0.33	0.33
Hydroforming	0.33	1.00	0.33	0.33
Casting	3.00	3.00	1.00	3.00
Superforming plastics	3.00	3.00	0.33	1.00

Table 33 Prioritization of values depicted in table 32

	Origami	Hydroformin	Casting	superplastic forming	Average	x	λ
Origami	0.14	0.30	0.17	0.07	0.1686	0.70	4.16
Hydroforming	0.05	0.10	0.17	0.07	0.0959	0.40	4.14
Casting	0.41	0.30	0.50	0.64	0.4630	2.07	4.48
Superforming plastics	0.41	0.30	0.17	0.21	0.2725	1.22	4.48
						λ_n	4.32
						CI	0.11
						RI	0.90
						CR	0.12

Table 34 Pairwise comparison of the alternatives wrt surface finish

Surface Finish				
	Origami	Hydroformin	Casting	superplastic forming
Origami	1.00	0.33	0.50	0.20
Hydroforming	3.00	1.00	2.00	0.50
Casting	2.00	0.50	1.00	0.25
Superforming plastics	5.00	2.00	4.00	1.00

Table 35 Prioritization of values depicted in table 34

	Origami	Hydroformin	Casting	superplastic forming	Average	x	λ
Origami	0.09	0.09	0.07	0.10	0.0868	0.35	4.01
Hydroforming	0.27	0.26	0.27	0.26	0.2642	1.06	4.03
Casting	0.18	0.13	0.13	0.13	0.1434	0.58	4.01
Superplastics Formin	0.45	0.52	0.53	0.51	0.5056	2.04	4.04
						λ_n	4.02
						CI	0.01
						RI	0.90
						CR	0.01

Table 36 Pairwise comparison of the alternatives with respect to optimized alignment of raw material

Optimized Alignment of Raw Material				
	Origami	Hydroformin	Casting	Superplastic Forming
origami	1.00	0.33	3.00	0.33
Hydroforming	3.00	1.00	5.00	2.00
Casting	0.33	0.20	1.00	0.33
Superplastic forming	3.00	0.50	3.00	1.00

Table 37 Prioritization of values depicted in table 36

	Origami	Hydroformin	Casting	Superforming plastics	Average	x	λ
Origami	0.14	0.16	0.25	0.09	0.1603	0.65	4.07
Hydroforming	0.41	0.49	0.42	0.55	0.4658	1.93	4.15
Casting	0.05	0.10	0.08	0.09	0.0795	0.32	4.08
Superplastics Formin	0.41	0.25	0.25	0.27	0.2944	1.25	4.23
						λ_n	4.13
						CI	0.04
						RI	0.90
						CR	0.05

2.4.3 Final Evaluation

In the final step of ranking or prioritization the overall comparison of the alternatives with the attributes listed is carried out and the alternative with the highest priority/ranking was selected. In our case hydroforming and SPF process were the best suited to our requirements. Table 38 depicts the results of the final comparison carried out for choosing the best alternative.

Table 38 Final Evaluation

	Reduction in NO of components	Reduction in changeover time	uniformity in material selection	Reducing variablity in dimensions	Avoiding intricate shapes	Reduction in number of process parameters	Common platform	Open architecture control	Optimized alignment of raw material	use of modular structures	Consolidation of parts	Concurrent operations	Reducing the intercell and intracell distance	Production Volume	Surface Finish	Ranking/Priority
	0.14	0.07	0.06	0.04	0.03	0.03	0.06	0.02	0.01	0.14	0.10	0.02	0.02	0.17	0.08	
Origami	0.10	0.51	0.16	0.15	0.09	0.49	0.09	0.16	0.16	0.17	0.09	0.14	0.08	0.17	0.09	0.1661
Hydroforming	0.18	0.17	0.49	0.50	0.25	0.29	0.54	0.30	0.47	0.45	0.30	0.51	0.13	0.10	0.26	0.2918
Casting	0.43	0.07	0.10	0.10	0.14	0.07	0.21	0.08	0.08	0.11	0.30	0.08	0.54	0.46	0.14	0.2481
Superforming plastics	0.29	0.25	0.25	0.25	0.52	0.15	0.16	0.46	0.29	0.27	0.31	0.27	0.25	0.27	0.51	0.2938

Tough superplastic forming results as the most viable alternative source on the overall evaluation for the purpose of effective mass customization it is better that we use the process based on the results of comparison between alternatives and attributes. The application of this process in the construction of BIW will be discussed in chapter 4.

CHAPTER 3

REVIEW OF SUPERPLASTIC FORMING AND HYDROFORMING PROCESS

Introduction

From the previous chapter we selected two processes as potential alternatives for the stamping process in order to achieve the objective of reduction in mass of the vehicle. Again the need for reduction in mass and a brief overview of how this could be achieved through alternative process was explained in the first chapter. In this chapter the overview of the two alternative processes is described in detail.

The first section deals with the overview of superplastic forming process. Though this process has been in use for more than a decade its application in automotive industry has been very limited until recently. The subsections describe the conventional superplastic forming process, the requirements and need of a superplastic forming process and the various industrial modifications made to this process along with their applications.

The second section of this chapter deals with hydroforming process which has been used in industry predominantly for manufacturing of different tubular parts in a vehicle. Here the advantages, disadvantages, various types of hydroforming are described along with their application in current situation.

1 Superplastic Forming

Superplastic forming is predominantly used in aerospace, architectural and sports industry as it is the most suitable forming process for forming of aluminum and

magnesium alloys. The conventional stamping of these alloys is expensive and requires major design changes due to their low formability. The advantages of superplastic forming are that it can form complex shape, negligible springback as the material formed is in superplastic state at the time of being formed, part consolidation as it can be used to form near net shapes, reduction in tooling cost. Also as the force exerted on the die is relatively less than stamping process the dies can be made of cast iron dies instead of hard to work tool steels [46].

Superplastic forming is a manufacturing process that depends on the tendency of the superplastic material to elongate by as high as 5000% under the application of high temperature. Usually the temperature to which the material is heated is 0.5 times that of its melting temperature. In a conventional superplastic forming process the required complex shape is formed through blow forming process where in a sheet of superplastic material is blown into the die cavity by applying pressure through gas blowing mechanism as shown in figure 12. As can be seen from the figure superplastic forming material requires just one die as against two required in a conventional press working process thereby reducing the overall tooling cost. A major requirement of this process is the procurement of superplastic alloys with very specific properties [48].

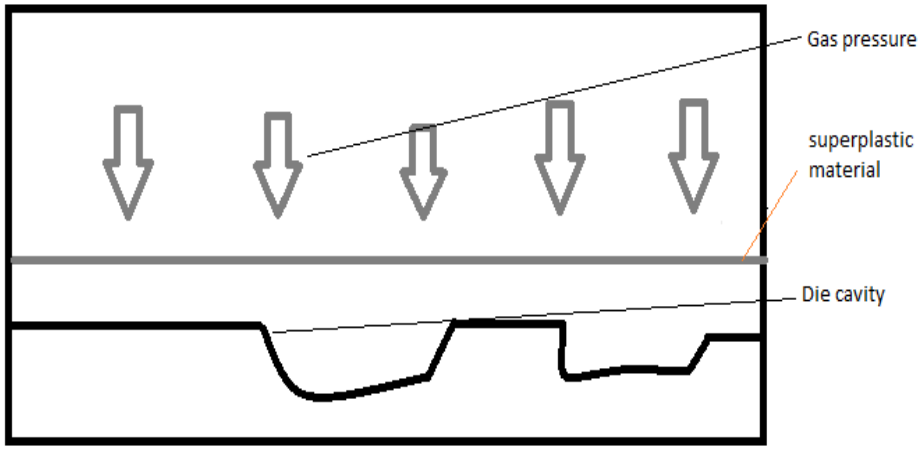

a)

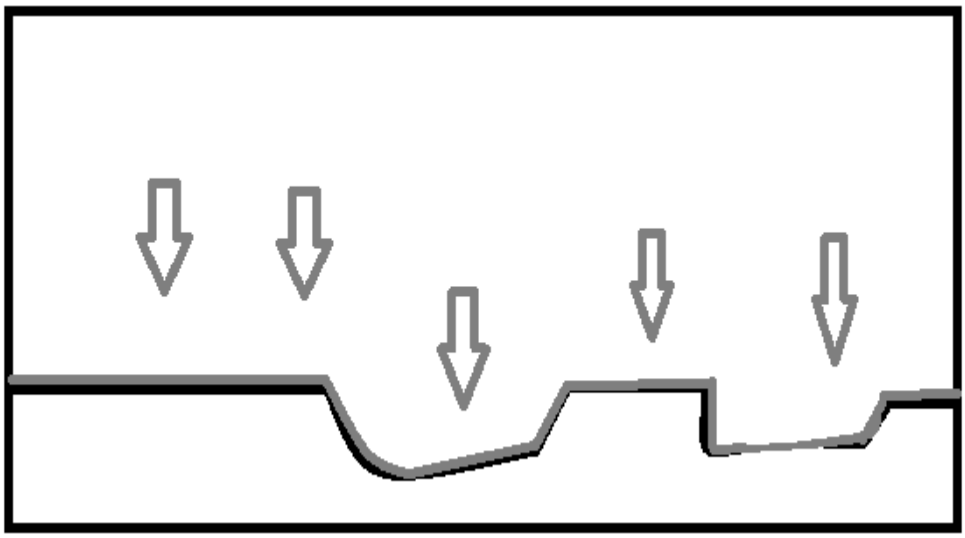

b)

Figure 12 Superplastic Forming a) before gas blowing b) after gas blowing

The superplastic alloys used for this purpose possess the ability to undergo very large elongation before complete failure which is often referred by the term elongation to failure. These alloys must have a very fine grain structure and must possess high strain rate sensitivity. Due to this the alloys cannot be formed in the normal way and require

various grain refinement technique. Some of the grain refinement techniques generally used for the formation of superplastic alloys is described below as derived from [49]. A brief description of some of these processes is given below.

- Dynamic recrystallization
- Thermo mechanical treatment
- Consolidation of amorphous or nano crystalline powder
- Mechanical alloying
- Physical vapor deposition
- Intense plastic straining

Dynamic recrystallization – Here a fine grained structure is obtained due to misorientation that takes place between the neighboring grain boundaries as a result of continuous recrystallization induced due to straining. This is usually carried out for alloys with sub grained structure. The resulting micro structural changes increase the strain rate sensitivity of the alloy. An example of an alloy refined through this process Al – Li alloy.

Thermo mechanical treatment – this type of grain refinement technique is mainly used for composites such as Al-Mg-Si matrix composites. Here grain refinement is achieved through hot extrusion process wherein the refinement takes place due to both recrystallization and precipitation.

Mechanical alloying – In this process the materials to be mixed are grounded and then fused together by sintering process and application of high iso static pressure. Such superplastic alloys are used for high strain rate super plasticity. Alloys such as IN 9052 are refined through this process.

1.1 Process Parameters

The main requirements for super plasticity to occur as describe in [50] are

1) A very high temperature of approximately above 0.4 times that of the melting temperature
2) A fine stable and equiaxed grain size that does not change significantly at elevated temperature formation.

In a conventional superplastic forming process the primary mode of deformation is through grain boundary sliding with accommodation of dislocation climb or glide playing secondary roles.

The deformation in superplastic forming can be described through the following equation from [50]

$$\in = A((D_O Gb)/kT)\left(\frac{b}{d}\right)^P \left(\frac{\sigma - \sigma_O}{G}\right)^n \exp\left(\frac{-Q}{RT}\right) \qquad \text{- (3.1)}$$

Where

$\in$ - Strain rate

A – Material constant

D_o – Pre exponential factor for diffusion

σ - Stress

σ_o- Threshold stress

G – Shear modulus

k - Boltzmann's Constant

d – Grain size

p – Grain size exponent

R – Gas constant

b – Burger vector

Q – Activation energy depending on the rate controlling the process

T – Absolute temperature

n – Stress exponent; inverse of strain rate sensitivity 'm'

The variables n, p & Q are used for identifying the deformation mechanism. The activation energy for grain boundary sliding of AA5083 alloy is 110 KJ/mole while the activation energy for SD creep in the same alloy is 136KJ/mole [51]. Deformation through grain boundary sliding mechanism takes place at low strain rate and requires a very fine grain structure. In grain boundary sliding the grains move past each other or along their adjacent common boundaries. This sliding motion can occur in three ways 1) strain jump 2) rotational jump 3) translation jump [52]. Also this form of deformation takes place at high strain rate of sensitivity. The typical values for strain rate and strain rate sensitivity for deformation through grain boundary sliding is 10^{-3} to 10^{-5} s^{-1} and $0.3<m<0.5$. With increase in strain rate other accommodating mechanism like dislocation climb or diffusion becomes the predominant deformation mechanism. Figure 14 depicts a flow stress and strain rate relationship and identifies the various deformation zones.

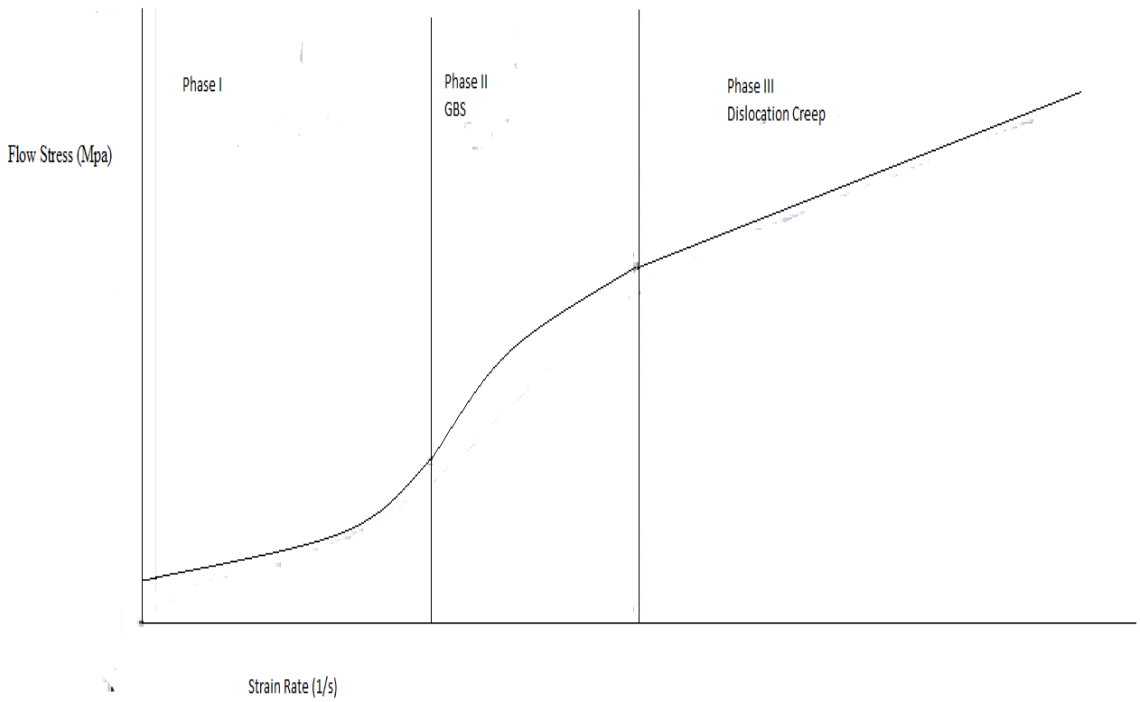

Figure 13 Strain rate and flow stress relationship for a typical fine grained superplastic material [48]

In figure 13 regions marked II and III deform via grain boundary sliding and dislocation slip (or any other accommodating mechanism).

One of the most important control factors in a superplastic forming process is the grain size. A typical grain size of a superplastic material ranges from 5 to 10 μm [49]. The effect of grain size on the formability of a superplastic material is shown in figure 14.

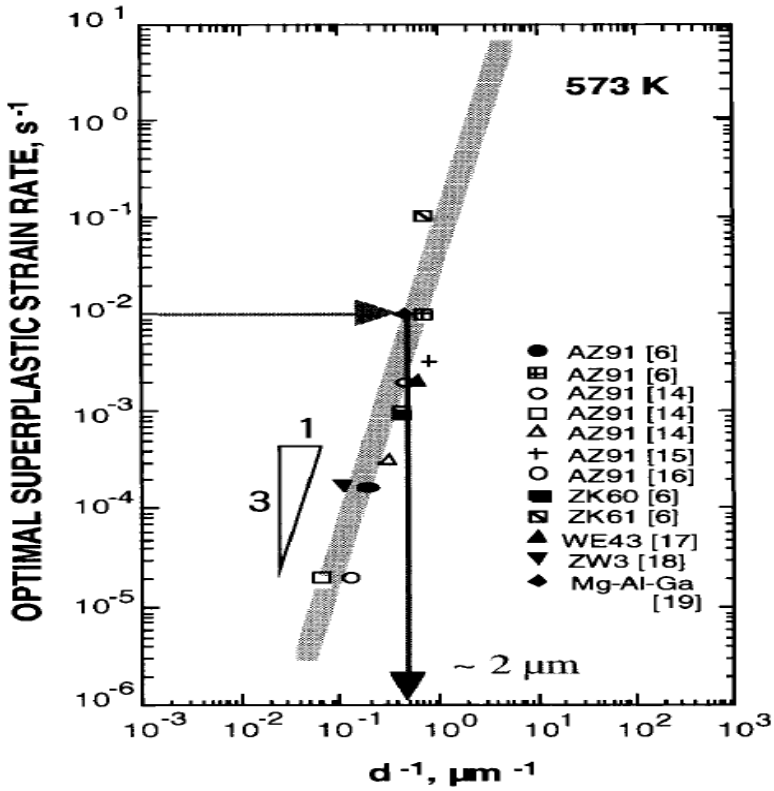

Figure 14 Relationship between strain rate and inverse size of grain [50].

From the above figure it can be seen that with the increase in optimal strain rate the grain size decreases indicating that for a high strain rate process to be possible a very fine grain size is required.

The slope of the line in the above figure represents the grain size exponent ‘p’. The relationship between flow stress and elongation to failure with respect to the strain rate for different grain sizes of a superplastic material is depicted below in figure 15.

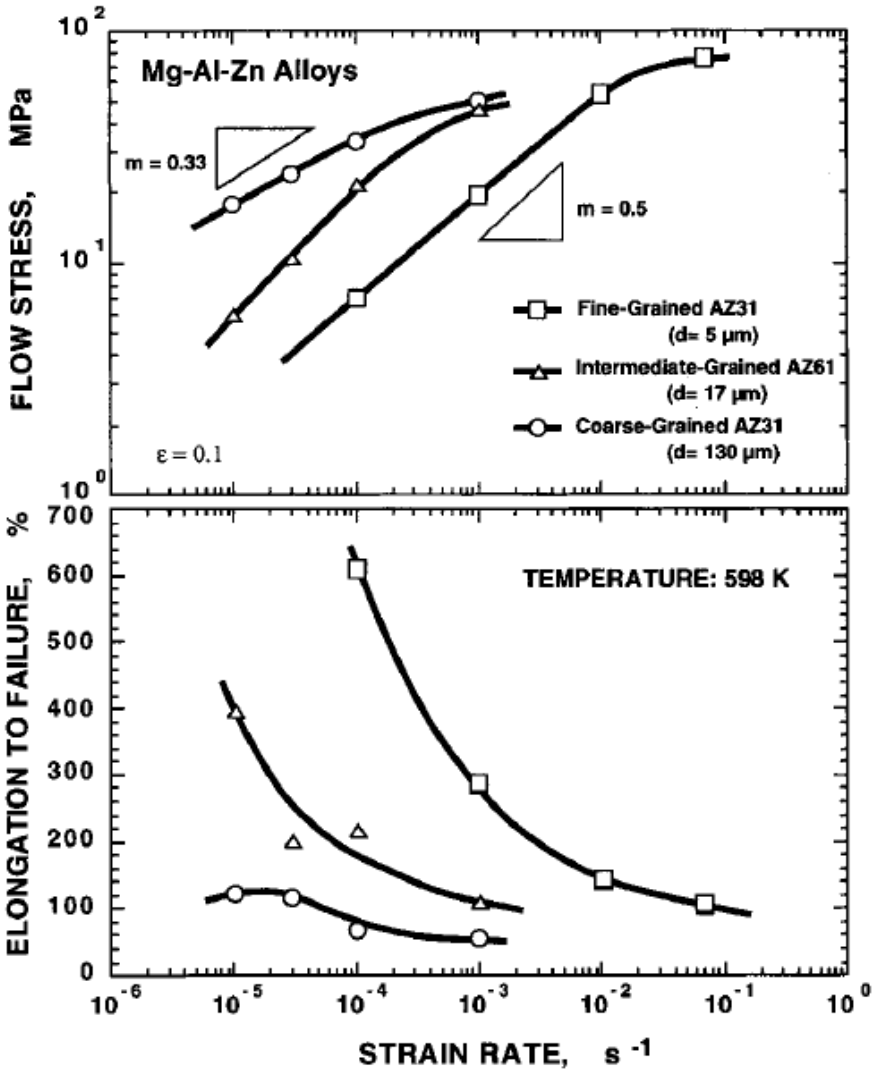

Figure 15 Relationship of flow stress and elongation to failure with strain rate for different grain sizes of a superplastic material [53].

From figure 16 we see that the flow stress of a given material decreases with decrease in grain size for a given strain rate. Also the slope of the curve depicting the strain rate sensitivity increases with decrease in grain size. Hence for a more uniform thinning of material a finer grain size becomes necessary. Also for a given strain rate the elongation to failure for a superplastic material increases with decreasing grain size.

While the flow stress of the material increases with increase in strain rate this leads to decrease in elongation to failure of the superplastic material. The initial flow stress of the material can be calculated from equation (3.2) as described in [51].

$$\sigma = k \times \in^{n} \times \in^{\cdot m} \qquad \text{- (3.2)}$$

Where σ refers to the flow stress of the material, k is is the strength of coefficient, n refers to the strain hardening exponent, m is the strain rate sensitivity, $\in^{\cdot}$ and $\in$ represent the strain rate and strain of the superplastic material.

From Mukherjee's work described in [51] we know that the strain rate sensitivity 'm' is another important control parameter in the superplastic forming process. The strain rate sensitivity of the material gives an indication of the capacity of the material to resist necking. Thus higher the m value of a process the greater is the probability of achieving uniform thickness distribution across the component. A high value of m helps in better elongation as it helps in reducing the tendency of localized necking. Figure 16 illustrates the effect of m value on the formability of superplastic materials.

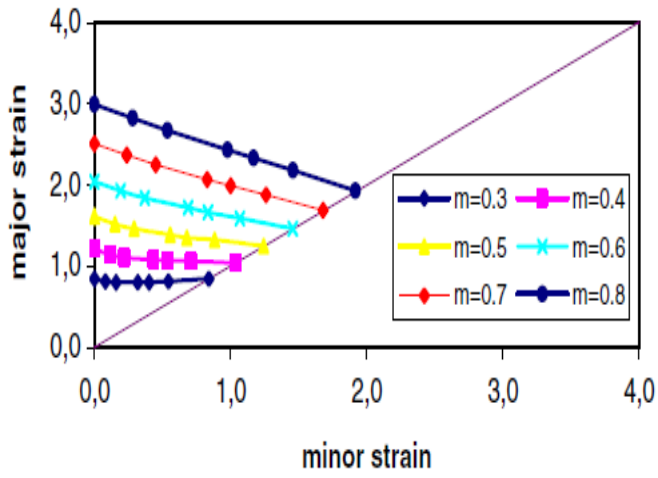

Figure 16 Effect of strain rate sensitivity 'm' on the formability of superplastic material [53].

From figure 16 it is clear that the formability of a superplastic material increases with increase in the strain rate sensitivity of the material. In other words with increase in m the elongation to failure of the material increases.

1.2 Industrial Customization of Super Plastic Forming Process (SPF)

From the various figures and relationship described in this section it becomes clear that for an efficient superplastic forming process the major requirements are a fine grain size, a high strain rate sensitivity and a very low strain rate. These requirements become major obstacles in application of superplastic forming process for vehicle manufacturing due to the following reasons obtained from the review of [46 -53]

1) A finer grain size calls for special processing and grain refinement techniques which increase the cost of raw material there by increasing the total product cost
2) As the process is to be carried out at very low strain rates the process cycle time is very high which affects the total production rate.

3) The superplastic forming process is suited for low to medium volume production only as at higher volume of production the advantages of conventional press working overdo the advantages of superplastic forming as the high tooling cost incurred in stamping process is spread over the high volume of products.

To overcome these disadvantages the OEMs started modifying the superplastic forming process to suit their production system. The General Motors (GM) developed The Quick Plastic Forming Process (QPF) to overcome the disadvantages. A systems approach was taken by GM to increase the production rate and suit high volume production. A typical QPF process is shown in figure 17. Some of the differences between the QPF and SPF as described in the work [54] are quick plastic forming process can be carried out at relatively higher strain rates than superplastic forming process as the primary mode of deformation is through dislocation creep and not grain boundary sliding. While grain boundary sliding deformation mechanism is dependent on the grain size solute dislocation creep mechanism is not dependent on the grain size. Thus need for specialized treatments of raw materials for the purpose of grain refinement are not required. The solute dislocation creep mechanism has a viscous glide mechanism where in the strain rate sensitivity is approximately 0.3.

The quick plastic forming process was used in the forming of Al doors which resulted in the mass saving of about 5.1 kg in the front door and 4.7 kg for the rear door when compared to a door made of steel through the stamping process. Also the entire inner panel was cast as one part which would never have been possible by using a conventional stamping process [59].

In line with this ford developed the Ford Advanced Superplastic Forming Technology (FAST) which makes use of a hybrid superplastic forming technology. Here the cycle time of the process is improved by changing the die design and automating process such as blank pre heating, part loading and extraction. A cost analysis for the production of door through intensive application of FAST process resulted in a weight saving of about 11.4% and a reduction in cost from $315 to $297. In this case the bench marking was done with a door made of aluminum where in the use of stamping process had ruled out the option of producing the door inner model as a single piece. With the application of FAST the number of part count was also reduced from eight to seven. [61]

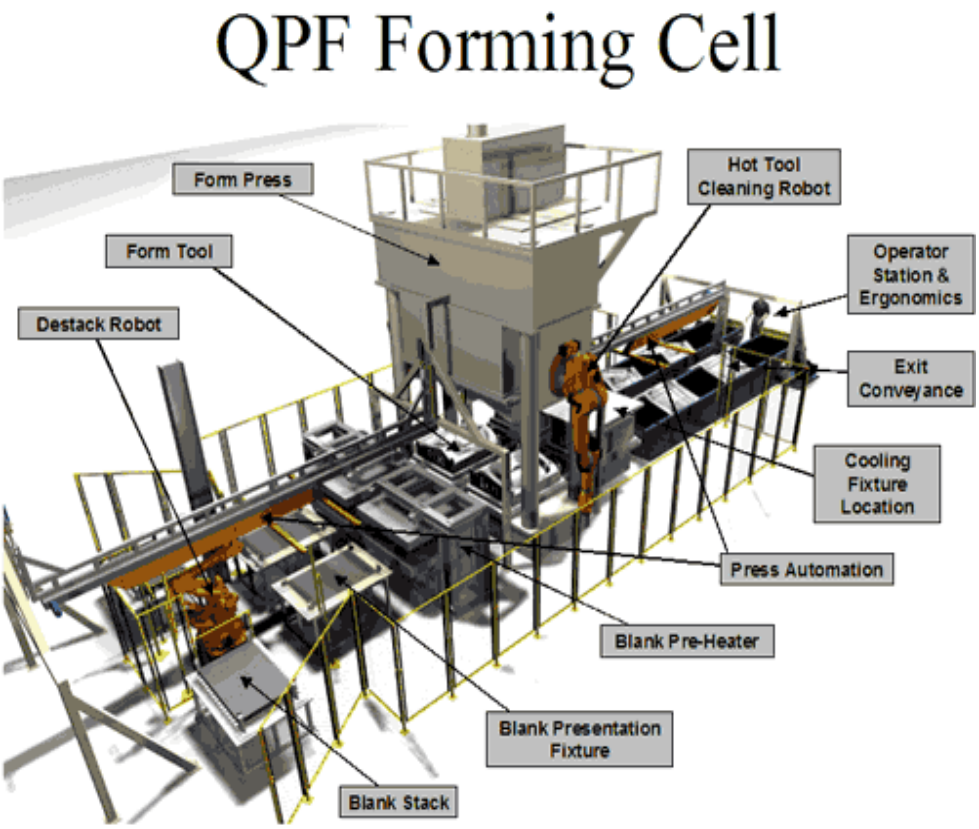

Figure 17 QPF system design [60]

2 HYDROFORMING PROCESS DESCRIPTIONS

Hydroforming refers to a fluid tool soft forming process like gas blow forming process where the blank is formed by the force exerted by fluid such as oil, water etc. here the fluid acts as the punch or the die [17]. Hydroforming is gaining importance in the automobile industry due to various advantages over stamping. One of the main areas of application of hydroforming has been in the forming of tubular components. In this section we discuss about the various classification of hydroforming along with their control parameters and requirements. Hydro-forming is mainly classified as sheet hydro-forming and tube hydro-forming.

2.1 Sheet Hydro-forming

Figure 19 describes a sheet hydro forming or hydro forming deep drawing process. It is a soft die forming technology and is extensively used in the automobile industry for deep drawing of blanks for formation of cups etc. one main advantage of this process is that it increases the Limit Drawing Ratio (LDR) of the blanks due to the continuous forces exerted by the fluid. From the works described in [58] and [59] a typical sheet hydroforming process is described as below.

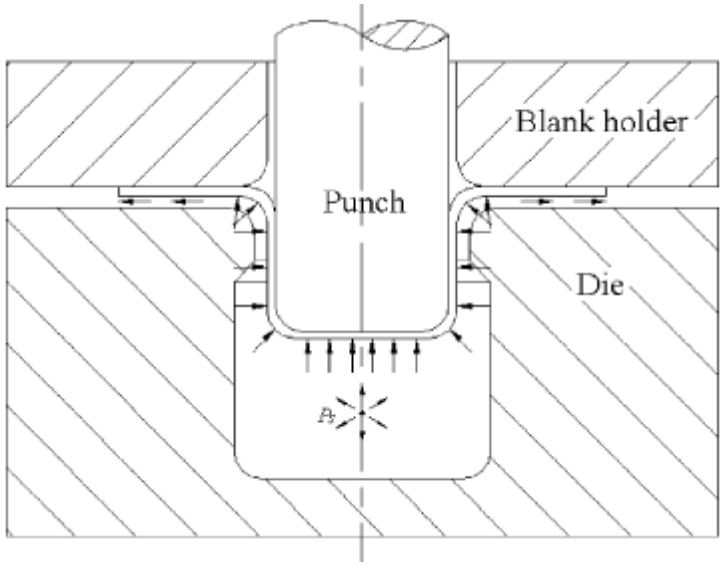

Figure 18 Sheet hydro-forming. [62]

As can be seen in the above figure the blank and the fluid are separated by a rubber diaphragm. Here the shape of the drawn blank is determined by the punch. The fluid substitutes for the female die thus bringing about a considerable reduction in the tooling cost. When the punch moves down in the chamber the blank assumes the shape of the punch under the action of forces exerted by the punch and the fluid. Also as the punch moves down against the pressure exerted by the fluid it can be seen that some of the fluid flows out and forms a layer between the blank and top surface of the die, this leads to a decrease in the friction co efficient between the blank and the die and hence improving the LDR of the blank. Also the fluid injected into the die under a pre calculated pressure causes pre bulging of the blank held before the action of punch. This pre bulging action causes uniform elongation of the blank under the action of punch. Also due to the continuous action of fluid acting against the punch there is reduction in localized thinning of the blank and this improves the formability as well as reduces the springback effect.

Cups and flat sheet metal products are formed using this technology. This is also known as flex forming or flexible forming mostly used in the production of prototypes and small scale production. It is also known hydrodynamic deep drawing process. The major advantages of this process are that it is highly flexible as in most cases only the punch contour needs to be changed.

2.1.1 Control Parameters

The important process control parameters for sheet metal hydroforming are the counter pressure applied, the punch surface roughness, blank thickness, blank material properties.

2.1.1.1 Counter Pressure –

The counter pressure applied relates to the pressure applied that acts against the punch force. The counter pressure is responsible for the pre bulging operation in a hydrodynamic deep drawing operation. Also it is seen from experimental results described in [60] that for the same punch roughness to achieve a maximum draw ratio counter punch have to be increased. Also for the same draw ratio the counter pressure increases with increase in thickness of the blank.

From [59] & [61] we have the calculation of pressure based on the available hydroforming press tonnage and component surface area. This is described in equation (3.3) and (3.4).

$$F_p = A_s \times P_f \qquad \text{- (3.3)}$$

$$F_p = \prod\left(d_b + 2h_k \tan\alpha\right)t_0 q_f \sigma_0 \left(1.1\ln\beta_0 + \mu\lambda\left(\frac{d_b}{2t_0}\right)\left(\left(\frac{\beta_0^{\,2} - c^2}{\beta}\right)\right) + \left(\left(p_g - p_{st}\right)\frac{\left(d_b + 2h_k \tan\alpha\right)t_0 q_f \sigma_0}{2t_0\sigma_0}\right)\right) - (3.4)$$

Where

F_p – Press force

A_s- Component surface area

P_f – Forming pressure

β_o – Drawing ratio

d_b – Punch base diameter

μ - Coefficient of friction

q_f – Strain hardening factor

p_g – Counter pressure

σ_o – Flow stress

p_{st} – Support pressure

t_o – Initial thickness of blank

d_{Bhi} – Inner blank diameter

c – Geometry constant

β - Instantaneous drawing ratio

α - Semi cone angle of punch

Figure 21 gives a complete description of a typical die and punch and its specification of a typical hydro dynamic drawing process

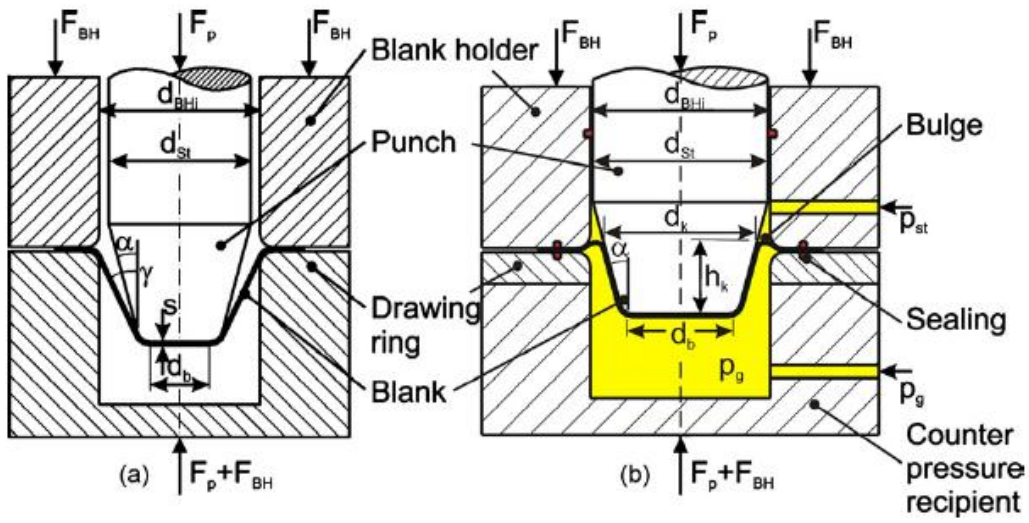

Figure 19 Punch and die specification of a) conventional deep drawing process and b) hydrodynamic deep drawing process [61].

2.1.1.2 Punch Roughness

From the experimental results obtained from [60] it is clear that the roughness of the punch surface area affects the drawablity ration of the blank. Also with increase in punch roughness lesser counter pressure is required due to the improved friction holding effect between the blank and the punch. Figure 20 illustrates the relationship between punch roughness and counter pressure.

2.1.1.3 Blank Thickness and Blank Material –

The initial blank thickness and blank material properties determine the amount of forming pressure required. As can be seen from equation (3.3) it is clear that the press

tonnage required is dependent on the area of the blank which is in turn determined by the initial thickness of the blank. Also the smallest inside radius that can be drawn using this process depends on the blank thickness and blank material properties as shown in equation (3.5) described in [64].

$$P_f = \frac{(t_o \times UTS)}{R_s} \qquad \text{- (3.5)}$$

Where

UTS – Ultimate tensile strength of the material

R_s – Smallest inside radius

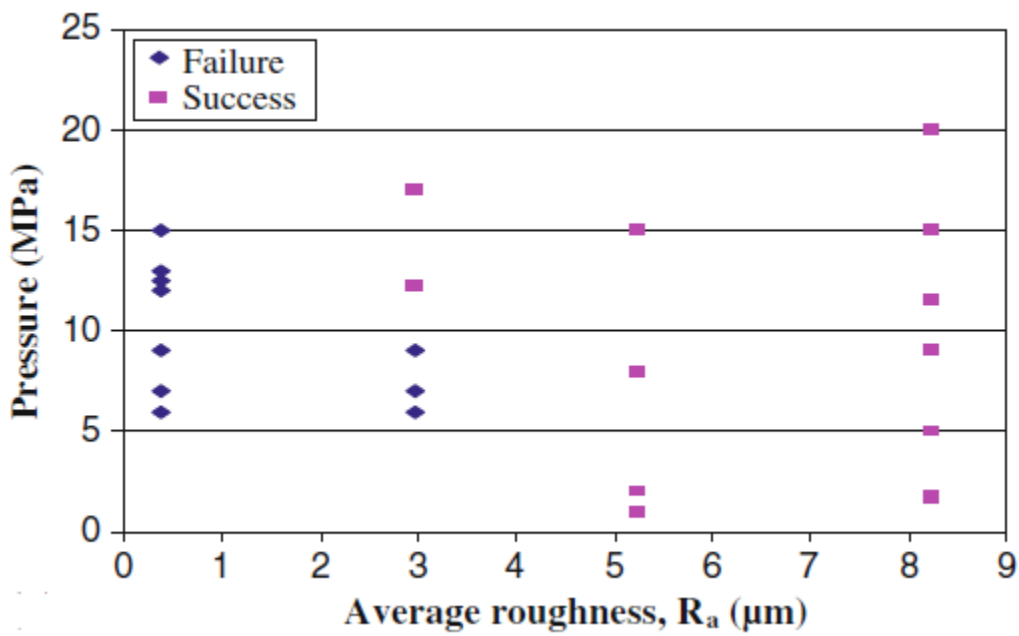

Figure 20 Relationships between punch roughness and counter pressure for a sheet thickness of 1.2 mm and drawablity ratio of 2.5 [60].

2.2 Tube Hydro Forming

This type of hydro forming is used for the production of tubular structures. Figure 21 represents a typical tube hydro forming process. Here the tube is inserted into the die and a compressive axial and internal pressure is generated. While the axial pressure is generated through use of axial punch, the internal pressure is generated through the fluid. The main difference between the sheet hydro forming and tube hydro forming is that while the fluid replaces the female die in sheet hydro forming it replaces the punch in tube hydro forming process. On application of internal pressure the tube expands/bulges to occupy the negative cavity formed after joining the two set of dies. It is further classified as low pressure forming, where the internal pressure ranges from 80 to 100 Mpa and the wall thinning is less than 5 % of its thickness, and high pressure forming wherein the pressure ranges up to 600 Mpa and the wall thinning is more than 5% of its initial thickness. [17]

Other variations of tube hydroforming process as described in [59] are multi pressure hydroforming, hydrobulge forming and bellow forming process. The major difference between a multi pressure forming process and low pressure forming process is that in multi pressure forming process the fluid pressure exists before the die is closed, die closing pressure, due to which the fluid acts as mandrel during the time of die closing hence preventing any excessive surface deformation. This process is most suitable for forming of body structures, frame members for vehicle. In the hydro bulging process is characterized by high end feeding activity of a relatively larger length of tube. This process is mainly used for the production of t joints or sections with end bulging .

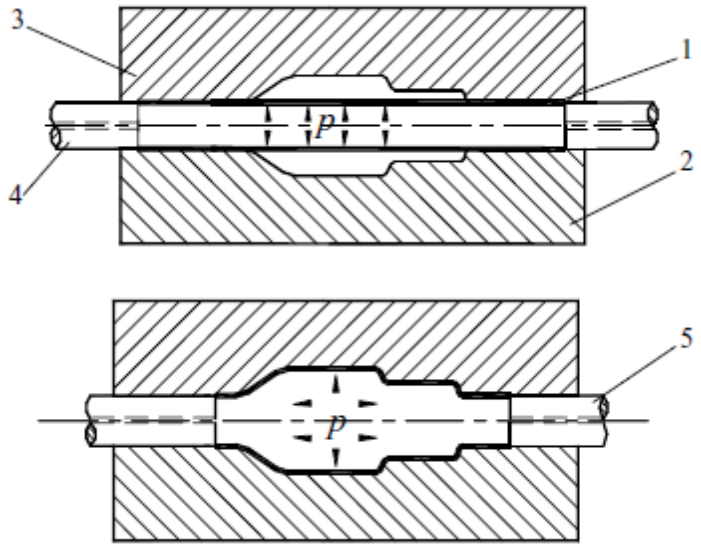

Figure 21 Tube hydro forming.1 tube, 2 lower die, 3 upper die, 4 axial punch.[58]

2.2.1 Control Parameters

The important parameters in the tube hydroforming process are classified as geometrical parameters, material parameters and process parameters. The geometrical parameters refers to the initial geometry of the tube like tube length, initial thickness required final thickness etc. The material parameters are required for determining the failure mode and region in the tube. The typical material parameters considered here are the ultimate tensile strength of material required, material anisotropy and strain hardening exponent.

2.2.1.1 Geometrical Parameters

Length of tube – The length of the tube being used is used to determine the maximum load that can be applied to the tube after which the various failure modes such as wrinkling, buckling or bursting of the tube takes place. The critical load at which

failure due to buckling and wrinkling can take place is calculated as shown in the equations (3.6) and (3.7) described in [62].

$$F_{cr} = \frac{\left(C \Pi^3 E r^3 t\right)}{L^2} \qquad \text{- (3.6)}$$

$$F_{WR} = \frac{\left(4 \Pi E_t t^2\right)}{3} \qquad \text{- (3.7) Where}$$

F_{cr} – Critical load at which buckling of tube takes place

F_{wr} – Critical load at which wrinkling of tube takes place

E – Elastic modulus of material

t – Initial thickness of the material

L – Length of the tube

C – End conditions of the tube

Thickness of the tube – The thickness of the tube to be used is determined by the final required thickness of the formed part. The relationship between the final thickness and the initial thickness is defined by the relationship shown in equation (3.8) as described in [63]. In a hydroforming process neither the stress ratio nor the inner radius remains constant or uniform over the period of operation. Hence in the following equation t1 refers to the instantaneous thickness of the part being formed.

$$t_1 = t\left[\left(\left(\frac{r_o}{r_1}\right)^{0.5} - 1\right)\alpha + \left(\frac{r_o}{r_1}\right)^{0.5}\right] \qquad \text{- (3.8)}$$

Where t_1 is the final thickness of the part, r_o is the initial inner tube radius; r_1 is the final inner radius of tube and α refers to the stress ratio

2.2.1.2 Process Parameters

Internal Pressure – The initial pressure is exerted by the fluid inside the tube and plays an important role in preventing unwanted deformations like buckling or wrinkling of the tube. The internal pressure pushes the tube into the die cavities and hence is important factor in the forming of intricate shapes. Equation (3.9) and (3.10) derived from [62] describe the initial pressure required to prevent buckling and wrinkling of the tube due to compressive stress and the maximum pressure required for forming of intricate shapes.

$$P_i = 2\sigma_{yp} \times (t / l)^2 \qquad \text{- (3.9)}$$

$$P_{i\max} = 2\sigma_f \times \ln\left(\frac{r_c}{r_c - t}\right) \times \left(\frac{1}{3}\right)^{0.5} \qquad (3.10)$$

Where

σ_{yp} – Yield strength of the tubular material

σ_f – Flow stress of the material

r_c – Minimum corner radius

t – Wall thickness

Axial Force – The axial force or the end feeding force are required for pushing the tube into the die when the dies are closed and also during operation to ensure a uniform

elongation of the material under the action of internal pressure exerted by the action of fluids inside the tube [59]. It also seals the tube and hence acting as a constraint on the degree of freedom of the tube inside the tube. Equation (3.11) derived from [62] gives the relationship between the axial force and internal pressure and final thickness of the part.

$$F_a = \prod \times R_o \times t_o \times \sigma_{yp} + \prod \times (R_1 - t_1)^2 \times P_i + 2 \times \prod \times R_1 \times d_a \times \mu \times P_i + 2 \times \prod \times (R_1 - 0.5t_1) \times t_1 \times \sigma_z \quad \text{- (3.11)}$$

Where

F_a – Axial force

R_o – Initial outer median radius

R_1 – Final outer median radius

μ - Coefficient of friction

4 Advantages and Disadvantages of Hydro Forming Process

Some of the main advantages of the hydro forming process are

1) Consolidation of parts - Many of the pieces that have to be stamped and then welded together can be formed in a single step through hydro forming process. As can be seen from figure 11 the number of components in a radiator assembly decreases on using of hydro forming technology. It is because hydro forming allows the forming of parts with varying cross section.
2) Weight reduction – Considering the same example as depicted in figure 11 the total weight of hydro formed assembly was 10 kg while that of the stamped assembly was

14 kg. This is due to the less use of material due to better design enabled by having closed sections of various profile and by removing flanges [42].

3) Lower tooling cost – As the number of tools used in the process is less the tooling cost is also very low. For example there is no need for blank holder or female die in sheet hydro forming. Also parts made from different materials can be made using the same tool [17].
4) Improved structural strength and stiffness – Due to the effect of work hardening that the materials undergo during tube preparation, pre bending and pre forming operation the yield strength of the material changes [22].
5) Fewer secondary operations – As some of the operations can be simultaneously performed, foe e.g punching of holes, hydro joining etc it reduces the number of process required to produce a part [15].
6) Tight dimensional tolerance and lower springback - High pressure, low corner radius and high friction allowed in obtaining high levels of plastic strain on top region of the samples with subsequent reduction in springback levels [58].

Some of the disadvantages or shortcomings of the hydro forming process are

1) Slow cycle time – A typical hydro forming operation consists of preparing tubes, pre bending and pre forming operations. The cycle time for a hydro forming process if twice that of stamping process due to pre forming and calibration time. Displacing large fluid volumes to open/close dies, moving the part in/out of tooling, filling and

pressurizing the tube are several factors that could bring about a reduction in cycle time [17].

2) Suitable for small lot production – Since the tool life of pre bending tool is short (approximately 40000 parts) it has to be replaced quite often for high volume of production. As the bending tool is highly dedicated and has a high changeover time this may cause problem in the throughput. Also increase in number of bend increases the tooling cost [42].
3) Often additional attachments like stamped brackets to form an interface between the hydro formed part and the rest of vehicle. Also there is an extra cost of welding this attachment. One way of overcoming this is by designing integrated joining technique in hydro forming process [15].
4) Stamping is often cost effective where a closed system can be manufactured from a single pair of stamped parts. This often due to the fact that hydro forming is more labor intensive due to process such as lubrication, bending and annealing [42].

Based on the study of the capabilities of these processes their application in the manufacturing of a vehicle body structure will be discussed in the following chapter.

CHAPTER 4

APPLICATION OF ALTERNATIVE MANUFACTURING PROCESS IN FORMIG OF VEHCLE BODY IN WHITE

Introduction

In this chapter the application of the alternative forming process of hydroforming and superplastic forming in construction of some of the parts of vehicle body structure is discussed. The vehicle considered here is has a Unibody structure with. The Bill of Materials (BOM) was generated for the vehicle under consideration for identification of the possible areas for the application of these forming processes. The main objective was limited to the area of application of the forming process and did not include the cost saving as the process are relatively new and the data required for the purpose of cost modeling was scarce.

The BOM generated suggests the alternative manufacturing process, loading characteristics and the material to be used. The alternative manufacturing process and the appropriate material for the considered part was determined based on the part function, loading characteristics and part complexity.

The entire body structure of the vehicle was classified into five major components as

1) Underbody
2) Roof
3) Front module
4) Body side frame

5) Body rear

1 Underbody

The underbody of the car is often used as the platform on which the entire Body In White (BIW) is assembled on. The underbody of the car can also be used a common platform while constructing different vehicles in case of a globalised platform. The main requirements of an underbody as described in [64] are

1) Provide a dimensionally stable base on which the entire body can be built upon
2) Provides support for the occupants and the mounting of interior components
3) Provides a base for the mounting of suspension and other components
4) It must therefore possess a good body stiffness

An underbody is typically a class C surface with requirement of good stiffness and excellent crash characteristic with no crumple zones. A typical underbody is shown in figure 22.

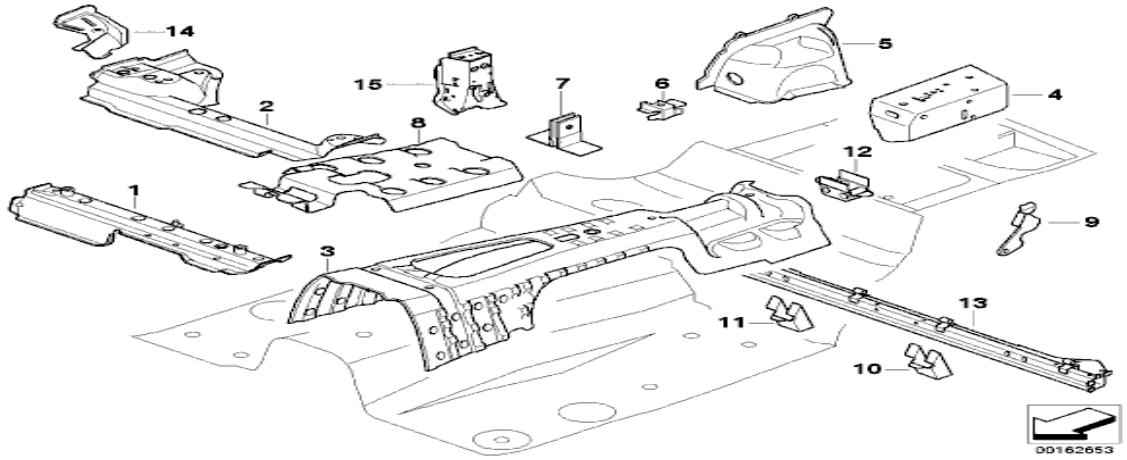

Figure 22 Underbody [65]

The construction of underbody consists of 14 hydroforming process and SPF process and predominantly makes use of aluminum as the primary material. Some of the parts considered along with their original and suggested manufacturing process are shown in table 39. The table also suggests the appropriate material that could be used along with the mentioned process.

Table 39 Alternative manufacturing process for vehicle underbody

Part description	Part code	Conventional process	Suggested alternatives	Loading characteristics	Material Suggested
Left front seat console	1	Stamping	hydroforming	LB	Aluminum
Right front seat console	1	Stamping	hydroforming	LB	Aluminum
Left rear seat console	2	Stamping	hydroforming	LB	Aluminum
Right rear seat console	2	Stamping	hydroforming	LB	Aluminum
Reinforcement tunnel	3	Stamping	SPF	LB	Aluminum
Support belt reel,left	4	Stamping	hydroforming	LB	Aluminum
Support belt reel,right	4	Stamping	hydroforming	LB	Aluminum
Support, wheelhouse left	5	Stamping	hydroforming	LB	Aluminum
Support, wheelhouse right	5	Stamping	hydroforming	LB	Aluminum
Bracket backrest outer left	6	Stamping	hydroforming	NLB	Aluminum
Bracket backrest outer right	6	Stamping	hydroforming	NLB	Aluminum
Centre backrest bearing bracket	7	Stamping	hydroforming	NLB	Aluminum
Bracket f shifting arm bearing	8	Stamping	hydroforming	LB	Aluminum
Holder, backrest left	9	Stamping	hydroforming	NLB	Aluminum
Holder, backrest Right	9	Stamping	hydroforming	NLB	Aluminum
Floor pan cross member, rear	13	Extrusion	hydroforming	LB	Aluminum

Here a conscious effort was made to reduce the number of SPF operations as it is relatively time consuming and since the underbody of the vehicle doesn't need any class A surface. Also the use of hydroforming process would impart better strain hardening characteristic to the parts being formed and hence providing the required stiffness. The using of hydroforming process helps in the use of aluminum as the primary material and also possibly reduces the gauge thickness required as compared to a conventional stamping process where in the use of aluminum as primary material would have been hindered due to the complexity of operation and an increase in gauge thickness of the material being used.

2 Roof

The roof of a vehicle is one of the primary factors adding to the aesthetic value of the vehicle. Some of the functions of the roof in a vehicle structure include from [64] are

1) Protect the occupants of the car from natural elements
2) Maintain dimensional accuracy of the vehicle structure
3) Contribute to the vehicle performance

As can be seen from figure 23 the roof of the vehicle under consideration seven major components with component 1 being a class A surface. Also the roof tops are not subjected to relatively heavy loading as compared with that of other parts of the body structure which enables the use of lighter materials such as magnesium. Here the roof panel is formed through superplastic forming as it is class A surface which requires a superior surface finish and this also enables the use of lightweight material magnesium. The other components that provide reinforcements to the roof panel are formed through

hydroforming process as these materials need to possess sufficient strength and stiffness to support the roof panel. Some of the major components considered and their suggested alternatives are shown in table 40.

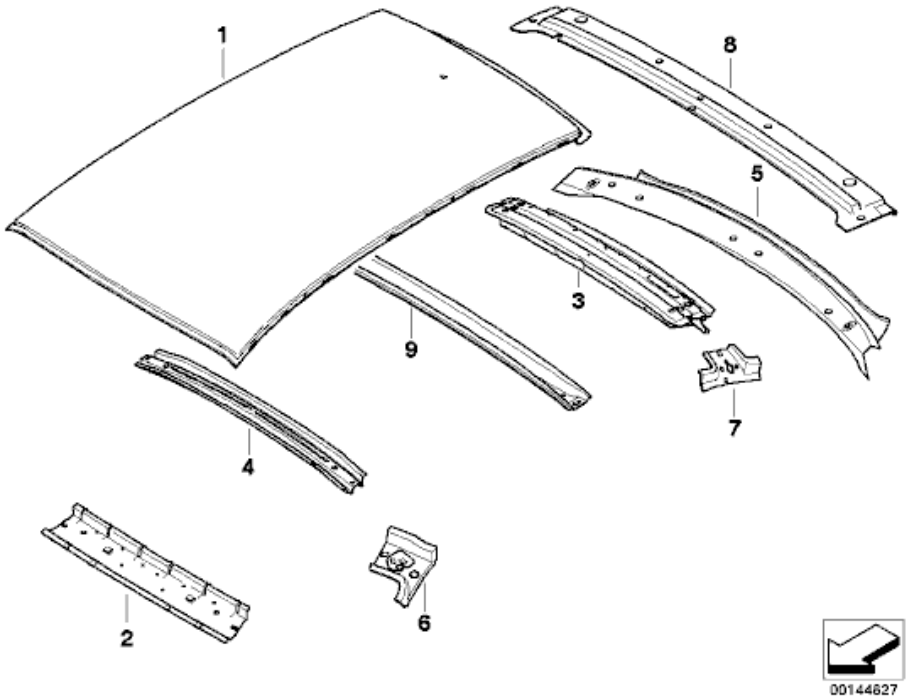

Figure 23 Roof panel [65]

Table 40 Alternatives for vehicle roof

Part description	Part code	Conventional process	Suggested alternative	Loading characteristic	Material
Roof cover	1	Stamping	SPF	NLB	Magnesium
Upper apron	2	Stamping	hydroforming	NLB	Aluminum
Rear window frame upper part	3	Stamping	hydroforming	NLB	Aluminum
Roof bow	4	Stamping	hydroforming	NLB	Aluminum
left upper apron reinforcement	6	Stamping	hydroforming	LB	Aluminum
Right upper apron reinforcement	6	Stamping	hydroforming	LB	Aluminum

Aluminum has been suggested for some of the parts described in the table like upper apron, roof bow and rear window frame upper part due to the process constraints in spite of the potential for the use of magnesium. This is because hydroforming of magnesium is still at theoretical level. Here the required stiffness is provided by the left and right apron reinforcement which is formed using hydroforming process.

3 Front Module

The main functions of the front module of the vehicle as described in [64] are

1) To provide a suitable base for the mounting of parts like engine, radiator and other systems
2) To act as absorption zones in the event of frontal collision and make sure that the crash energy is not transferred to the body side frames and floor.
3) To act as a barrier for the transfer of noise, vibration and other outputs of combustion process from reaching the body interior.
4) To absorb load from the frontal suspension.
5) To support the dash panel and other interior elements housed by the dash panel

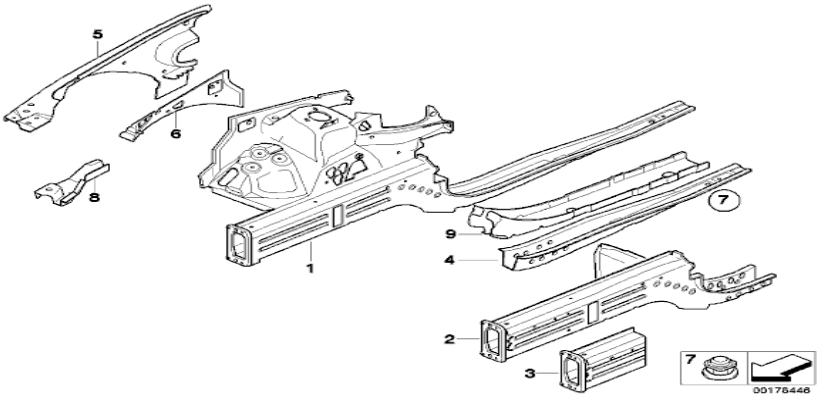

a)

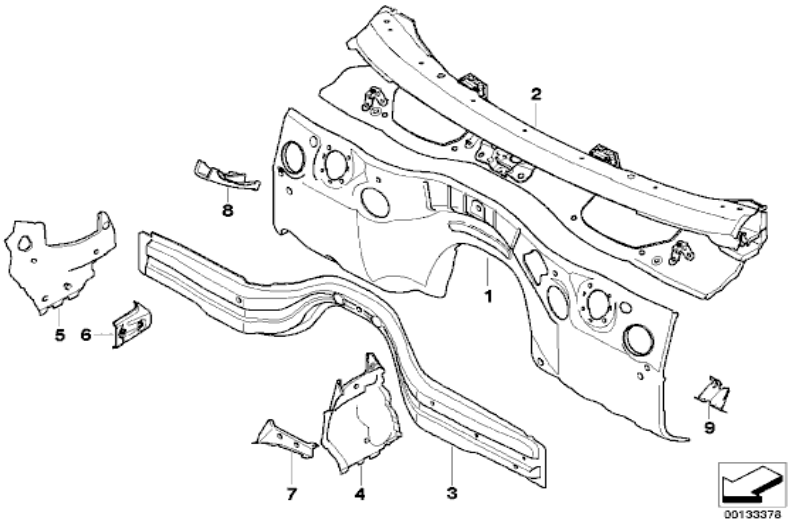
2
8
1
5
6
9
7
4
3
00133378

b)

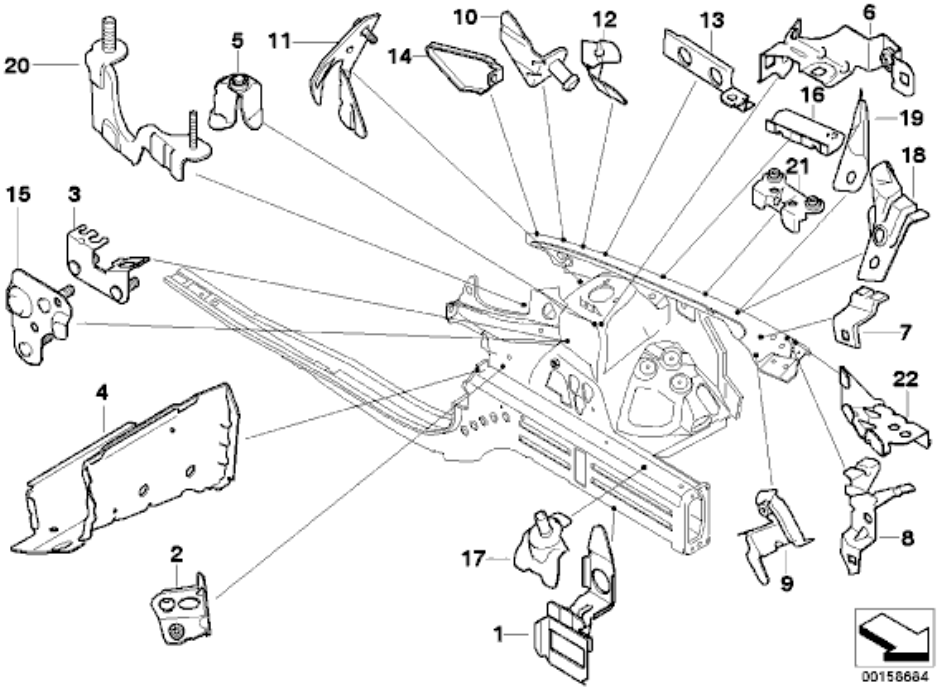
20
5
11
10
14
12
13
6
16
19
18
21
15
3
7
22
4
8
2
17
9
1
00158684

c)

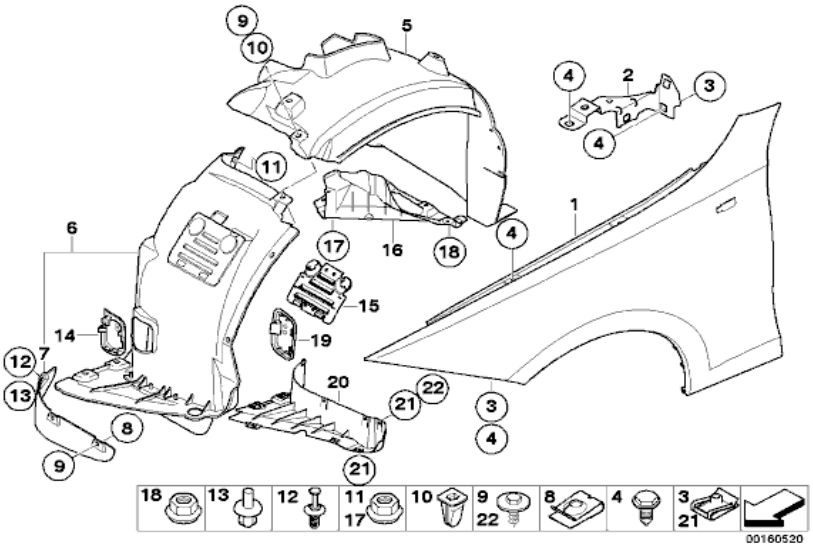

d)

Figure 24 a) Wheel housing/ engine support b) Splash wall parts c) Front body bracket left/ right d) Front side panel [65]

The front module construction consists of predominantly hydroforming process as most of the part are subjected to continuous loading and also as the parts form a class C or class B surface. The SPF process is used for the forming of splash wall, lower apron and front wall as these parts are not subjected to continuous heavy loading and present a feasible opportunity for weight reduction. Hence to use magnesium as the primary material for the purpose of weight reduction SPF was used. SPF was also used for the forming of front side panel shown by component 1 in figure 25d. Here SPF was used as this was a class A surface which required a very good surface finish and also as it was not subjugated to continuous heavy loads magnesium was used as primary material here.

The front body bracket as shown in the figure 24c formed purely by hydroforming process as it provides the mount for engine, radiator and other systems. The tables 41, 42, 43 &44 gives details of the parts considered and suggested alternatives.

Table 41 Front side panel

Part description	Part code	Conventional process	Suggested alternatives	Loading characteristics	Material Suggested
cover wheel housing ,front left	5	stamping	Hydroforming	NLB	Aluminum
cover wheel housing ,front right	5	stamping	Hydroforming	NLB	Aluminum
cover wheel housing,bottom left	6	stamping	Hydroforming	NLB	Aluminum
cover wheel housing, bottom right	6	stamping	Hydroforming	NLB	Aluminum
side panel front left	1	stamping	SPF	LB	Magnesium
side panel front right	1	stamping	SPF	LB	magnesium
bracket side panel,top left	2	stamping	Hydroforming	LB	Aluminum
bracket side panel,top right	2	stamping	Hydroforming	LB	Aluminum
pressure lip seal front left	7	stamping	Hydroforming	NLB	Aluminum
pressure lip seal front right	7	stamping	Hydroforming	NLB	Aluminum
lid wheel house cover, front left	14	stamping	Hydroforming	NLB	Aluminum
lid wheel house cover, front right	14	stamping	Hydroforming	NLB	Aluminum

Table 42 Wheel house engine support

Part description	Part code	Conventional process	Suggested alternatives	Loading characteristics	Material Suggested
Front left wheel house	1	Casting	Hydroforming	LB	Aluminum
Front right wheel house	1	Casting	Hydroforming	LB	Aluminum
Front left engine support	2	Casting	Hydroforming	LB	Aluminum
Front righ engine support	2	Casting	Hydroforming	LB	Aluminum
rear left engine support	4	Casting	Hydroforming	LB	Aluminum
rear right engine support	4	Casting	Hydroforming	LB	Aluminum
Support strut,wheel house exterior left	5	Casting	Hydroforming	LB	Aluminum
support strut,wheel house exterior right	5	Casting	Hydroforming	LB	Aluminum
support strut, wheel house,interior left	6	Stamping	Hydroforming	LB	Aluminum
support strut ,wheel house interior right	6	Stamping	Hydroforming	LB	Aluminum
crash reinforcement left	9	Casting	Hydroforming	LB	Aluminum
crash reinforcement right	9	Casting	Hydroforming	LB	Aluminum

Table 43 Splash wall parts

Part description	Part code	Conventional process	Suggested alternatives	Loading characteristics	Material Suggested
Splash wall	1	Stamping	SPF	NLB	Magnesium
Lower apron	2	Stamping	SPF	NLB	Magnesium
Support strut/front wall	3	Stamping	SPF	NLB	Magnesium
Left engine compartment partition	4	Stamping	Hydroforming	NLB	Aluminum
Right engine compartment partition	5	Stamping	Hydroforming	NLB	Aluminum
Right partition reinforcement	6	Stamping	Hydroforming	LB	Aluminum
Cover panel engine compartment left	7	Stamping	Hydroforming	NLB	Aluminum
Cover panel engine compartment right	7	Stamping	Hydroforming	NLB	Aluminum
Brake/Accelerator module	9	Stamping	Hydroforming	LB	Aluminum
Covering right	8	Stamping	Hydroforming	NLB	Aluminum

Table 44 Front body bracket left

Part description	Part code	Conventional process	Suggested alternatives	Loading characteristics	Material Suggested
Support for left radiator	1	Stamping	hydroforming	LB	Aluminum
Bracket intake silencer , bottom left	2	Stamping	hydroforming	LB	Aluminum
Connector engine support/side frame lef	4	Stamping	hydroforming	LB	Aluminum
Bracket intake silencer , top left	5	Stamping	hydroforming	LB	Aluminum
Bracket side panel, top left	6	Stamping	hydroforming	LB	Aluminum
Bracket side panel, front	7	Stamping	hydroforming	LB	Aluminum
Bracket, active steering, top	10	Stamping	hydroforming	LB	Aluminum
Bracket, active steering, bottom	11	Stamping	hydroforming	LB	Aluminum
holder,brake hose left	15	Stamping	hydroforming	LB	Aluminum

4 Body Side Panel

The main functions of the body side panel as described in [64] are to

1) To provide required stiffness
2) To possess the required collision characteristics for both side and frontal collision
3) To provide a rigid base for the mounting of roof module.
4) To provide the aperture for mounting of doors and other needed closures.

The body side panel is essentially a class A surface and subjected to load bearing through the roof module. The body side panel considered is shown in figure 25. The body side panel acts as an intermediate connection between the front module and the body rear of a vehicle body structure. It also acts as the intermediate between the underbody and the roof module.

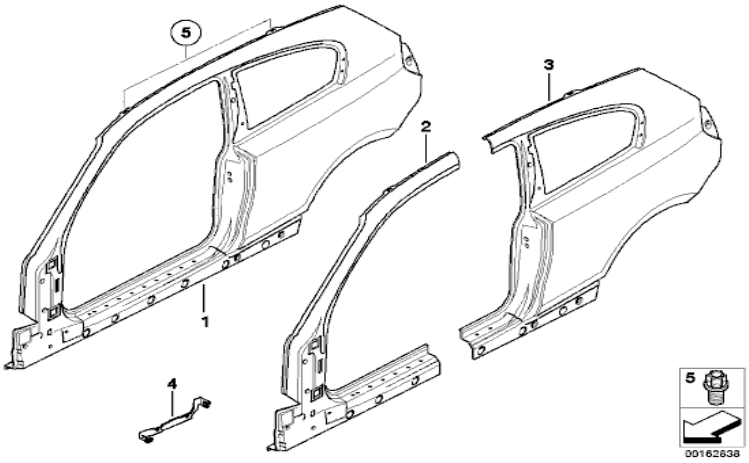

Figure 25 Body side frame [65]

The roof module is supported by the body side pillar which consist of the reinforcement structures of pillar A,B &C. these pillars add strength to the body structure and play an important role in the design and assembly of door closures.

The construction of body side frame consists predominantly of superplastic forming process using aluminum as the primary material. Magnesium is not used as the body side frame is subjected to continuous load as it supports the roof module.

The use of SPF enables the consolidation of many parts in the body side frame.

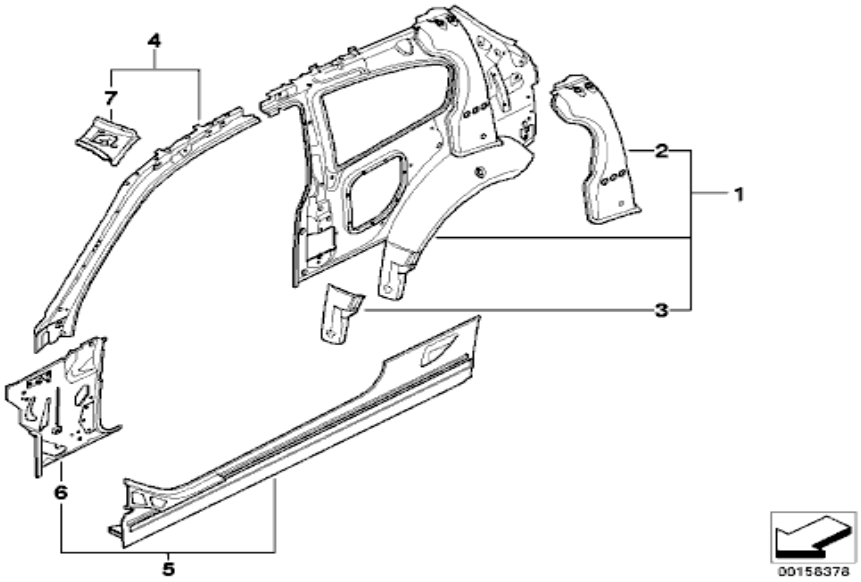

Figure 26 Single components of body side frame [65]

From figure 26 depicted above we can see that the component 1 representing the interior side frame consists of two parts 2 and 3 which are c pillar reinforcement and cover panel for wheel house. With the creation of the complex die there is a possibility for the manufacturing of this part in a single SPF operation producing a near net shape. The drawback in this type of part consolidation is that as the size of apertures are too large this may lead to a huge scrap generation thereby increasing the cost of the production process. Hence it is much more feasible to produce part 1 as a single part

instead of producing the entire side frame as one part. The parts considered and their suggested method of manufacturing are depicted in table 45 &46

Table 45 Body side frame

Part description	Part code	Conventional process	Suggested alternatives	Loading characteristics	Material Suggested
Side frame exterior left	1	Stamping	SPF	NLB	Aluminum
side frame exterior right	1	Stamping	SPF	NLB	Aluminum
left exterior coloumn A	2	Stamping	SPF	NLB	Aluminum
Coloumn A exterior Right	2	Stamping	SPF	NLB	Aluminum
left rear side panel	3	Stamping	SPF	NLB	Aluminum
right rear side panel	3	Stamping	SPF	NLB	Aluminum
bracket side panel coloumn A,left	4	Casting	Hydroforming	NLB	Aluminum
Bracket side panel coloumn A,right	4	Casting	Hydroforming	NLB	Aluminum

Table 46 Body side frame single components

Part description	Part code	Conventional process	Suggested alternatives	Loading characteristics	Material Suggested
left interior side frame	1	Stamping	SPF	LB	Aluminum
right interior side frame	1	Stamping	SPF	LB	Aluminum
C pillar reinforcement left	2	Casting			
C pillar reinforcement right	2	Casting			
Cover panel wheel house left	3	Casting			
Cover panel wheel house right	3	Casting			
left side member	5	Stamping	hydroforming	LB	Aluminum
right side member	5	Stamping	hydroforming	LB	Aluminum
left interior coloumn A	6	Casting	hydroforming	LB	Aluminum
Right interior coloumn A	6	Casting	hydroforming	NLB	Aluminum
Left upper apron reinforcement	7	Casting	hydroforming	LB	Aluminum
right upper apron reinforcement	7	Casting	hydroforming	LB	Aluminum
Connector,A-pillar/roof frame left	4	Casting	hydroforming	LB	Aluminum
Connector,A-pillar/roof frame right	4	Casting	hydroforming	LB	Aluminum

5 Body Rear

The body rear consists of trunk floor, floor parts rear and tail trim. This also includes the closures like deck lid. These are represented in figure 27.

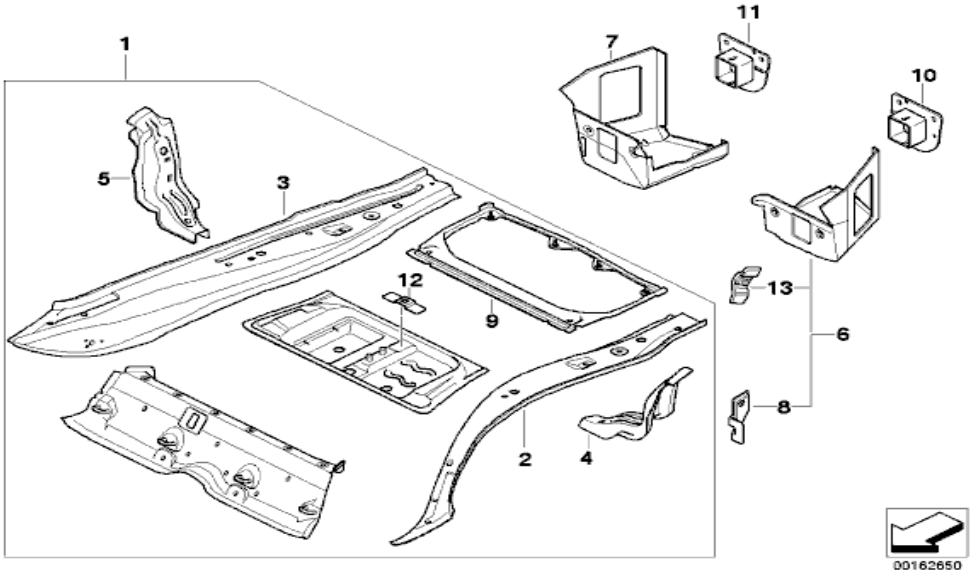

a)

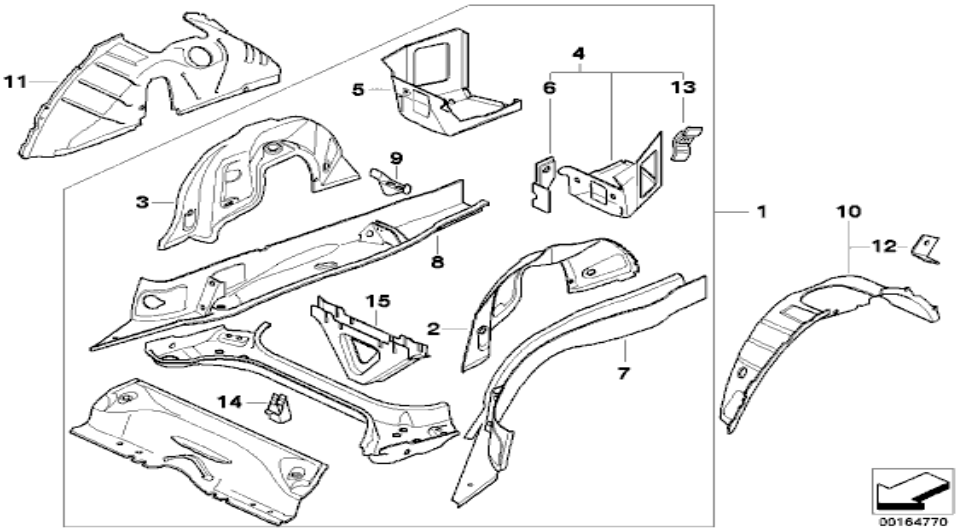

b)

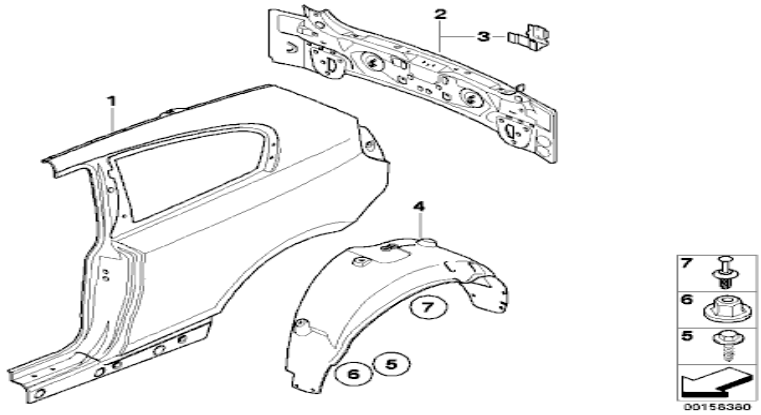

c)

Figure 27 Body rear a) Trunk Floor b) Floor parts rear c) Tail trim [65]

The main functions of the body rear as described in [64] are

1) To possess the required stiffness for maintaining the stability of the structure on the whole
2) To absorb energy in case of rear collision and prevent the transfer of collision energy to the body interior
3) To provide for the mounting of rear axle and other systems
4) To provide mounting for exterior and interior trim
5) To provide for mounting of fuel tank

The construction of body rear consists predominantly hydroforming operation as most of the parts are subjected to loads and they also fall under the category of class B or class C surface. SPF is used for the construction of class A surface such as the rear side panels and closures like deck lid. From the figure 27 c SPF is used for the forming of component

1 and 2 which represent the rear side panel and the tail trim respectively. The trail trim is made of magnesium while the side panel is made of aluminum as the side panels need to be dent resistant.

Also SPF is used in the construction of floor trunk panel part represented by 1 in figure 27 a. the use of SPF induces the possibility for near net shape production of part 1 through the part consolidation of 2, 3, 9 and 12 which represent the side member, truck floor frame and bracket for components. Due to the continuous load bearing nature of the parts aluminum is to be used as the material for construction of these parts. The different parts considered and the alternative methods for manufacturing of these parts are depicted in table 17, 18 & 19.

Table 47 Trunk floor

Part description	Part code	Conventional process	Suggested alternatives	Loading characteristics	Material Suggested
Trunk floor upper part	1	Welding	SPF	LB	Aluminum
	2	Stamping		LB	
	3	Stamping		LB	
	4	Stamping	Hydroforming	LB	Aluminum
	5	Stamping	Hydroforming	LB	Aluminum
	9	Stamping		LB	
	12	Casting		LB	
Trunk floor left	6	Stamping	Hydroforming	LB	Aluminum
Trunk floor right	7	Stamping	Hydroforming	LB	Aluminum
Mount bumper left	10	Casting	Hydroforming	LB	Aluminum
Mount bumper right	11	Casting	Hydroforming	LB	Aluminum

Table 48 Floor parts rear

Part description	Part code	Conventional process	Suggested alternatives	Loading characteristics	Material Suggested
Rear axle carrier	1	Welding			
	2	Stamping	hydrofroming	LB	Aluminum
	3	Stamping	hydrofroming	LB	Aluminum
	4	Stamping	hydrofroming	LB	Aluminum
	5	Stamping	hydrofroming	LB	Aluminum
	6	Casting	hydrofroming	LB	Aluminum
	7	Stamping	hydrofroming	LB	Aluminum
	8	Stamping	hydrofroming	LB	Aluminum
	9	Casting	hydrofroming	LB	Aluminum
Rear left wheelhouse,inner half	10	Stamping	hydrofroming	NLB	Aluminum
Rear right wheelhouse,inner half	11	Stamping	hydrofroming	NLB	Aluminum

Table 49 Tail trim

Part description	part code	Convention process	Suggested alternative	Loading characteristics	Material Suggested
Left rear side panel	1	stamping	SPF	NLB	Aluminum
Right rear side panel	1	stamping	SPF	NLB	Aluminum
Tail trim	2	stamping	SPF	NLB	Magnesium
Rear silencer bracket	3	stamping	SPF	NLB	Magnesium
cover wheel housing ,rear left	4	stamping	Hydroforming	NLB	Aluminum
cover wheel housing ,rear right	4	stamping	Hydroforming	NLB	Aluminum

CHAPTER 5

CONTRIBUTION AND FUTURE WORK

Contribution

The main objective of the work carried out was to study and suggest ways for reducing the mass of total vehicle body through alternative forming process that had the potential to replace the conventional press working process used in manufacturing of vehicle body structure. The most appropriate alternative manufacturing processes were determined through the use of AHP tool as described in chapter 2. The AHP was used for the pairwise comparison and judgment of the different attributes and alternatives considered. From the result obtained from the use of AHP tool literature review regarding the capabilities of the processes was done as documented in chapter 3. Here the relationships between the various process parameters were studied and their importance with respect to the manufacturing parameters such as cycle time, material selection and system engineering were valued. A bill of material was created depicting the important components of a body in white along with the conventional manufacturing process and loading characteristics. The alternative to the conventional manufacturing process were then suggested along with the appropriate material that could be used with respect to the corresponding process to achieve the objective of light weighting.

Future Work

The current BOM suggests the alternative forming process with the suitable material to be used for achieving a relatively lighter BIW. The BOM could be expanded to incorporate the different joining techniques to follow the forming process which would

then be followed by an appropriate painting sequence. The inclusion of these processes would enable the use of cost modeling tools to determine a near net cost of production of the BIW. Due to the process limitation other suitable materials like composite matrix were not considered which would have required out of line production process.

References

[1] S Cooney, B D. Yacobucci, "U.S. Automotive Industry: Policy Overview and Recent History", CRS Report for Congress. April 2005

[2] B.D. Yacobucci, Robert Bamberger, CRS Report for Congress, "Automobile and Light Truck Fuel Economy: The CAFE Standards", January 2007

[3] W S. Vickrey, Land Economics "Theoretical and Practical Possibilities and Limitations of a Market Mechanism Approach to Air Pollution Control", Land economics, 1992

[4] "Why CAFE worked", David L Greene, Energy Policy Vol. 26, Published by Elsevier Science Ltd, 1998

[5] P R. Portney, "Effectiveness and Impact of Corporate Average Fuel Economy (CAFE) Standards", Committee on the Effectiveness and Impact of Corporate Average Fuel Economy (CAFE) Standards, 2002

[6] Ching-Shin Norman Shiau, Jeremy J. Michalek, Chris T. Hendrickson, "A structural analysis of vehicle design responses to Corporate Average Fuel Economy policy", Transportation Research Part A, 2009

[7] Geoff Davies, "Material for automobile bodies", Elsevier, 2003

[8] M Bull, R Chavali , A Mascarin "Aluminum Vehicle Structure: Manufacturing and Lifecycle Cost Analysis Hybrid Drive and Diesel Fuel Vehicles", Research Report, Conducted by IBIS Associates, Inc for The Aluminum Association, 2008

[9] Dr M.A Omar, “Anatomy of an Automobile, Material”, Advanced materials for automotive application, CU-ICAR, 2009

[10] C J. Kahane, “Effect of car size on the frequency and severity of rollover crashes”, In: 13th E.S.V. Conference, NHTSA, 1991

[11] C. J Kahane, “Vehicle Weight, Fatality Risk and Crash Compatibility of Model Year 1985-93 Passenger Cars and Light Trucks”, U.S. Department of Transportation, NHTSA Technical Report, 1997

[12] American Chemistry Council “New auto safety research evaluates impact of size and weight on accidents. Lighter/large vehicles can decrease fatalities, contrary to common belief”,

[13] M Saito, S Iwatsuki, K Yasunaga, K Andoh, “Development of aluminum body for the most fuel efficient vehicle” ,JSAE Review 21 (2000) 511 516, 2000

[14] M. Marré, M. Ruhstorfer, A.E. Tekkaya, M.F. Zaeh, “Manufacturing Of Lightweight Frame Structures By Innovative Joining By Forming Processes”, Int J Mater Form (2009) Vol. 2, Springer/ESAFORM, 2009

[15] R. Neugebauer, R. Mauermann, R. Grützner, “Hydrojoining”, Int J Mater Form, Springer/ESAFORM, 2008

[16] “Automotive Steel Design Manual”, American Iron and Steel Institute & Auto/Steel Partnership, 2002

[17] S.H. Zhang, “Developments In Hydroforming”, Journal Of Materials Processing Technology 91, Elsevier, 1999

[18] Brandon M. Hance, “Work Hardening Behavior of Advanced High Strength Steels”, Guest Lecturer for AuE 868 CU-ICAR, 2008

[19] “Ultra Light Steel Auto Body Stretches the Limits of Hydroformed Tube Technology”, American Iron and Steel Institute

[20] Brian Cantor, Patrick Grant, Colin Johnston,“Automotive Engineering, lightweight functional and novel materials”, Published By Taylor And Francis Group, 2007

[21] S.G. Luckey, S. Subramanian, C. Young, and P.A. Friedman ,“Technical and Cost Study of Superplastic Forming of a Lightweight Aluminum Door Structure”, JMEPEG 16, ASM International, 2007

[22] M. Tolazzi, “Hydroforming Applications In Automotive: A Review”, Int J Mater Form Vol. 3, Springer-Verlag France, 2010

[23] M K Kulekci, “Magnesium and its alloys applications in automotive industry”, Int Journal Advanced Manufacturing Technology 39, Springer-Verlag London Limited, 2007

[24] M.K. Khraisheh, F.K. Abu-Farha, K.J. Weinmann, “Investigation of Post-Superplastic Forming Properties of AZ31 Magnesium Alloy”, Annals of the CIRP Vol. 56, Elsevier, 2007

[25] W.J. Kima, J.D. Park, U.S. Yoon, “Superplasticity and Superplastic Forming Of Mg–Al–Zn Alloy Sheets Fabricated By Strip Casting Method”, Journal of Alloys and Compounds 464, Elsevier, 2007

[26] "The Development Of A New Manufacturing Route For Superplastic Magnesium Alloy Sheet Exploiting Twin Roll Casting", R Dashwood, M Jackson, D Klaumünzer, Z Fan, R Grimes, 6th EUROSPF Conference, 2008

[27] http://www.magnesium-technologies.com

[28] T. Saaty, "How to make a decision: The Analytic Hierarchy Process", European Journal of Operational Research 48, Elsevier Science Publishers, 1990

[29] S Sipahi And M Timor, "The Analytic Hierarchy Process And Analytic Network Process: An Overview Of Applications", Emeraldinsight, 2009

[30] A Armillotta, "Selection of layered manufacturing techniques by an adaptive AHP decision model", Robotics and Computer-Integrated Manufacturing 24, Elsevier, 2008

[31] A. Hambali, S. M. Sapuan, N. Ismail, Y.Nukman, "Material Selection Of Polymeric Composite Automotive Bumper Beam Using Analytical Hierarchy Process", J. Cent. South Univ. Technology 17, Springer, 2010

[32] C.W Chang, C.R Wu, C.T Lin, H.C Chen, "An Application Of AHP And Sensitivity Analysis For Selecting The Best Slicing Machine", Computers & Industrial Engineering 52, Elsevier, 2007

[33] M.K Tiwari, and R.Banerjee "A Decision Support System for the Selection of a Casting Process Using Analytic Hierarchy Process", Production Planning & Control 12, 2001

[34] O. Bayazit, “Use Of AHP In Decision-Making for Flexible Manufacturing Systems”, JMTM 16, Emeraldinsight, 2004

[35] Patrick T. Harker and L G. Vargas, “The Theory Of Ratio Scale Estimation: Saaty’s Analytic Hierarchy Process”, Management Science Vol. 33, Informs, 1987

[36] T L. Saaty, H.S Shih, “Structures in decision making: On the subjective geometry of hierarchies and networks”, European Journal of Operational Research 199, Elsevier, 2009

[37] T L. Saaty, “The Fundamentals of Decision Making and Priority Theory with the Analytic Hierarchy Process”, Vol. VI, AHP Series, RWS Publ., 2000 (revised).

[38] T L. Saaty, “Relative Measurement And Its Generalization In Decision Making Why Pairwise Comparisons Are Central In Mathematics For The Measurement Of Intangible Factors The Analytic Hierarchy/Network Process”, Estadística E Investigación Operativa / Statistics And Operations Research VOL. 102 (2), RACSAM, 2008

[39] G Coyle: “The Analytic Hierarchy Process (AHP)”, Open Access Material. AHP, Pearson Education Limited 2004

[40] T L. Saaty, “Rank from Comparisons and From Ratings In The Analytic Hierarchy/Network Processes”, European Journal Of Operational Research 168, Elsevier, 2006

[41] H Thiruvengadam, “Analysis of Part Consolidation Techniques for Automotive BIW Panels Based On Advanced Sheet Metal Forming Technologies”, Clemson University, SC, 2010

[42] B Constantine, R Roth, and J P. Clark, “Substituting Tube-Hydroformed Parts for Automotive Stampings: An Economic Model”, Automotive Material Economics, 2001

[43] G. Pahl And W. Beitz, J. Feldhusen And K.-H. Grote, “Engineering Design A Systematic Approach”, 3rd Edition, Springer, 2007

[44] ‘Light Weight SUV Frame Design Development”, Altair Engineering Report, 2003

[45] R.S Lee, Y.M Chen, H Y Cheng and M.D Kuo, “A Framework Of A Concurrent Process Planning System For Mold Manufacturing” Computer Integrated Manufacturing Systems Volume 11, 1998

[46] P.A. Friedman, S.G. Luckey, W.B. Copple, R. Allor, C.E. Miller, and C. Young, “Overview of Superplastic Forming Research at Ford Motor Company”, JMEPEG 13, ASM Int, 2004

[47] Y Koren, U Heisel, F Jovane, T Moriwaki, G Pritschow, G Ulsoy, H. V Brussel, “Reconfigurable Manufacturing System”, Annals Of CIRP Vol 48, 1999

[48] M. F. Thompson, “Effects Of Laboratory Rolling Conditions On Continuously Cast AA5083”, Naval Post Graduate School, Monterey, California, 2007

[49] M Mabuchi and K Higashi, "The Processing, Properties, and Applications of High-Strain-Rate Superplastic Materials", JOM, 1998

[50] "Application of Superplasticity in Commercial Magnesium Alloy For Fabrication Of Structural Components", T Mukai, H Watanabe And K Higashi, Material Science And Technology Vol 16, 2000

[51] "Deformation Mechanisms In Superplastic AA5083 Materials", M.A Kulas, W. P Green, E.M. Taleff, P.E. Krajewski, And T.R. Mcnelley, Metallurgical And Materials Transactions A Vol 36A, 2005

[52] K. Seigert, T Werle, "Physical Mechanism Of Superplasticity",TALAT Lecture 3802, Stuttgart University

[53] G Giuliano, "Analysis Of Forming Limit Diagram For Superplastic Materials", Int Journal Adv Manufacturing Technology 31, 2006

[54] R. Boissiere, S. Terzi, J.J. Blandin, L. Salvo, "Quick-Plastic forming: similarities and differences with Super-Plastic forming", 6th EUROSPF Conference, 2008

[55] J. G. Schroth, H.M. Brueggeman, and N. P. Grewal, "Quick Plastically Formed Aluminum Doors: Design and Performance", JMEPEG 16, ASM Intl, 2007

[56] S.S. Woo, Y.R. Kim, D.H. Shin And W.J. Kim, "Efflects Of Mg Concentration On The Quasi- Superplasticity Of Coarse-Grained Al-Mg Alloys", Scripta Materialia Vol. 37, Elsevier, 1997

[57] P.E Krajewsik, J.G Schroth, "Overview of Quick Plastic Forming Process Technology", Material Science Forum Vol 552, Trans Tech Publication, 2007

[59] H Singh, “Fundamentals of Hydroforming”, Society of Manufacturing Engineers, 2003

[60] A. A Kumar, S Satapathy, and D.Kumar, “Effect of Sheet Thickness and Punch Roughness on Formability of Sheets in Hydromechanical Deep Drawing”, JMEPEG, ASM Int, 2010

[61] T. Khandeparkar, M. Liewald, “Hydromechanical deep drawing of cups with stepped geometries” Journal of materials processing technology 202, Elsevier, 2008

[62] M Koc, T Altan, “Prediction of forming limits and parameters in the tube hydroforming process”,International Journal of Machine Tools & Manufacture 42, Elsevier, 2002

[63] B Li, D.R Metzger, T.J Nye, “Reliability Analysis Of The Tube Hydroforming Process Based On Forming Limit Diagram”, Journal Of Pressure Vessel Technology Vol 128, ASME, 2006

[64] “An Assessment of Mass Reduction Opportunities for a 2017 – 2020 Model Year Vehicle Program”, Lotus Engineering Inc., 2010

[65] www.RealOEM.com