US005189357A

# United States Patent [19]

Woodson et al.

[11] Patent Number: 5,189,357

[45] Date of Patent: Feb. 23, 1993

[54] METHOD AND APPARATUS FOR IMPROVING PERFORMANCE OF AC MACHINES

[75] Inventors: Herbert H. Woodson; John S. Hsu, both of Austin, Tex.

[73] Assignee: Board of Regents, The University of Texas System, Austin, Tex.

[21] Appl. No.: 382,078

[22] Filed: Jul. 17, 1989

Related U.S. Application Data

[63] Continuation of Ser. No. 888,818, Jul. 22, 1986, abandoned.

[51] Int. Cl.[5] ..... H02P 5/40

[52] U.S. Cl. ..... 318/737; 318/807

[58] Field of Search ..... 363/39, 43, 41; 318/730, 737, 831, 832, 773-775, 812, 807; 310/184

[56] References Cited

U.S. PATENT DOCUMENTS

| | | | |
|---|---|---|---|
| 2,896,143 | 7/1959 | Bekey | 318/730 |
| 3,903,469 | 9/1975 | Ravas . | |
| 3,970,914 | 7/1976 | Salzmann et al. | 318/812 |
| 4,225,914 | 9/1980 | Hirata et al. | 363/43 |
| 4,260,923 | 4/1981 | Rawcliffe . | |
| 4,264,854 | 4/1981 | Hawtree . | |
| 4,371,802 | 2/1983 | Morrill . | |
| 4,394,596 | 7/1983 | Kimura et al. . | |
| 4,492,890 | 1/1985 | MacDonald . | |
| 4,503,377 | 3/1985 | Kitabayashi et al. | 318/730 |
| 4,508,989 | 4/1985 | Sawyer et al. . | |
| 4,566,179 | 1/1986 | Sawyer et al. . | |
| 4,573,003 | 2/1986 | Lipo | 318/254 |
| 4,634,950 | 1/1987 | Klatt | 318/737 |
| 4,795,959 | 1/1989 | Cooper | 323/308 |
| 5,019,766 | 5/1991 | Hsu et al. | 318/807 |

OTHER PUBLICATIONS

Mechler, Robert Carl. "Increased Rating of Polyphase Induction Motors Using Third Harmonic Excitation," Thesis turned in to The Univ. of Texas at Austin, May 1985, catalogued Jul. 22, 1985.

Liou, Shy-Shenq Power "Theoretical and Experimental Study of Polyphase Induction Motors With Added Third Harmonic Excitation," Thesis turned in to The Univ. of Texas at Austin, Dec. 1985.

*Primary Examiner*—David Smith, Jr.

*Attorney, Agent, or Firm*—Arnold, White & Durkee

[57] ABSTRACT

A method and apparatus for improving the performance of polyphase AC machines. The polyphase AC machines are excited both with a fundamental frequency and with an odd harmonic of the fundamental frequency. The fundamental flux wave and the harmonic flux wave will travel at synchronous speed in the air gap. This facilitates redistributing the flux densities in the machine and thereby increasing the total flux per pole in the machine.

19 Claims, 17 Drawing Sheets

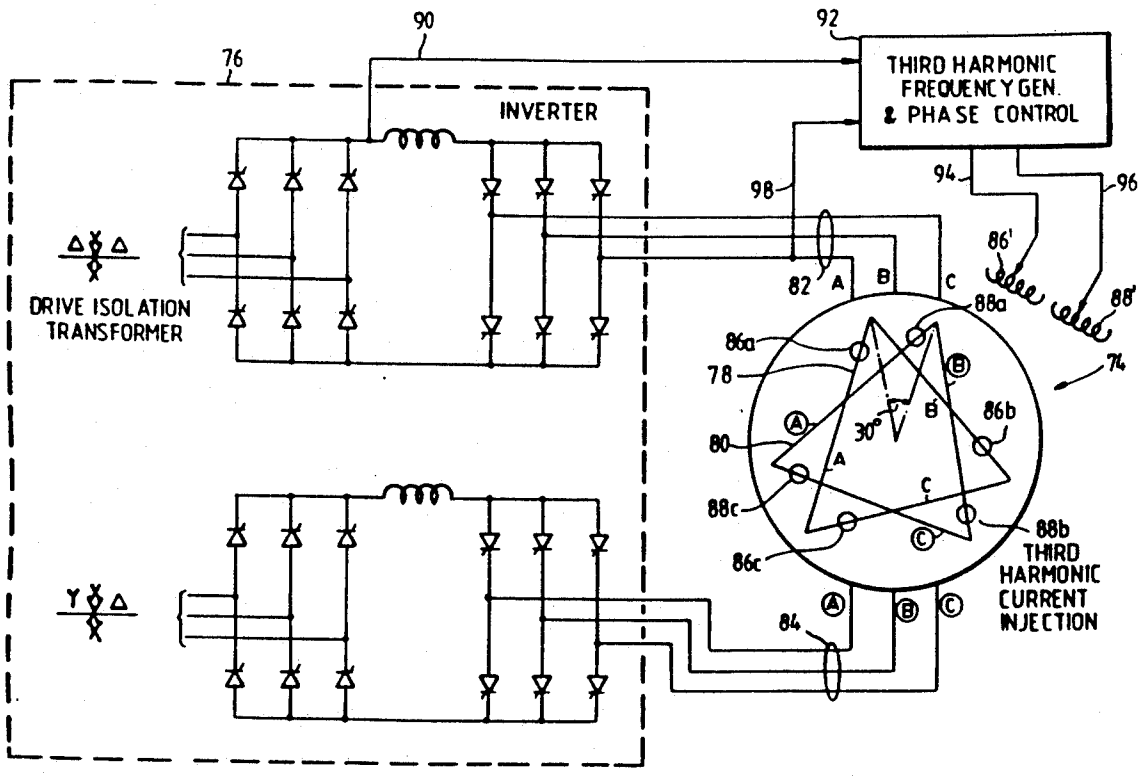

FIG.1A

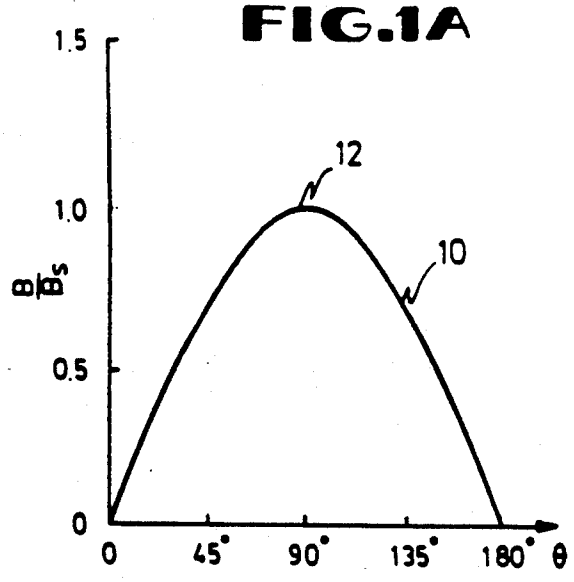


FIG.1B

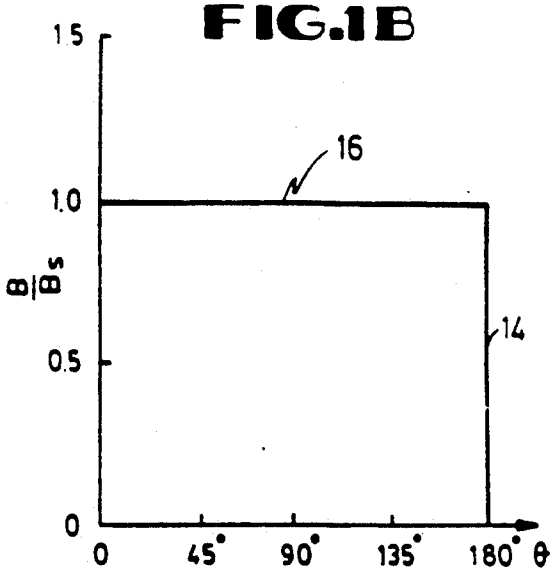


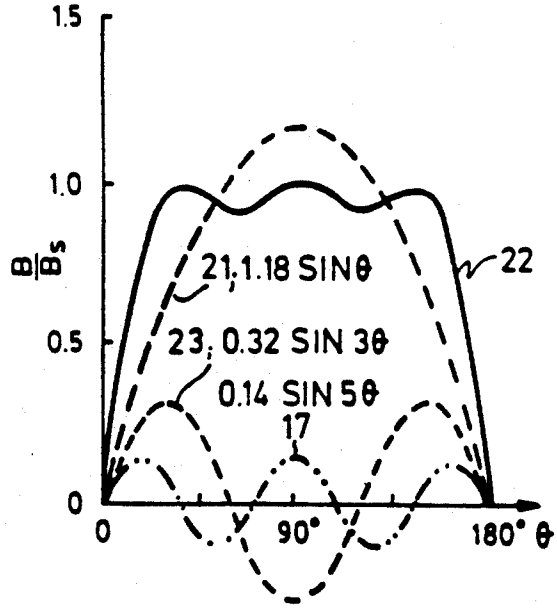


FIG.1D

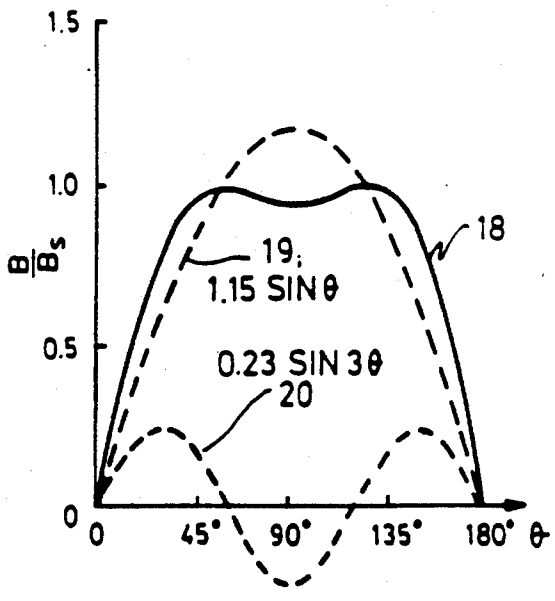


FIG.1C

FIG.2A

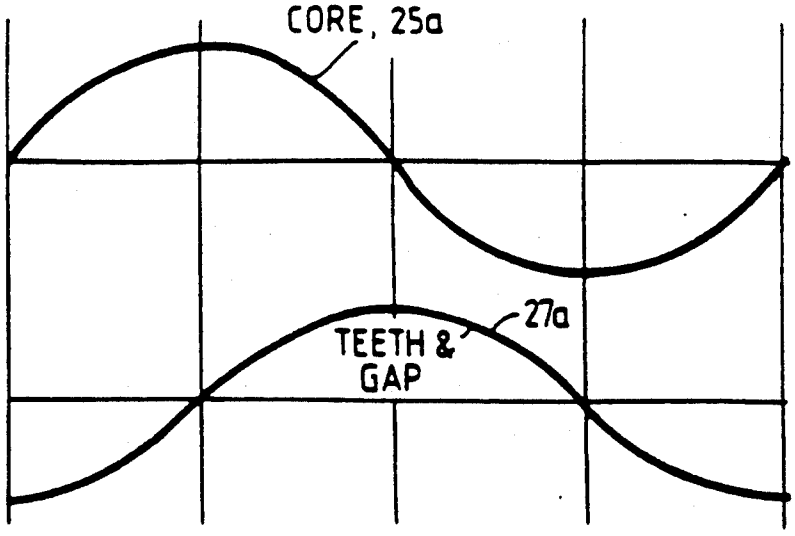


FIG.2B

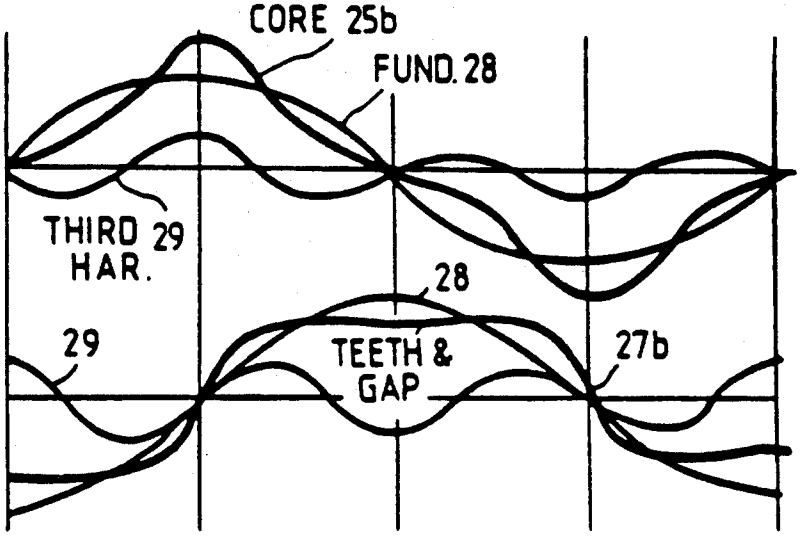


FIG.2C

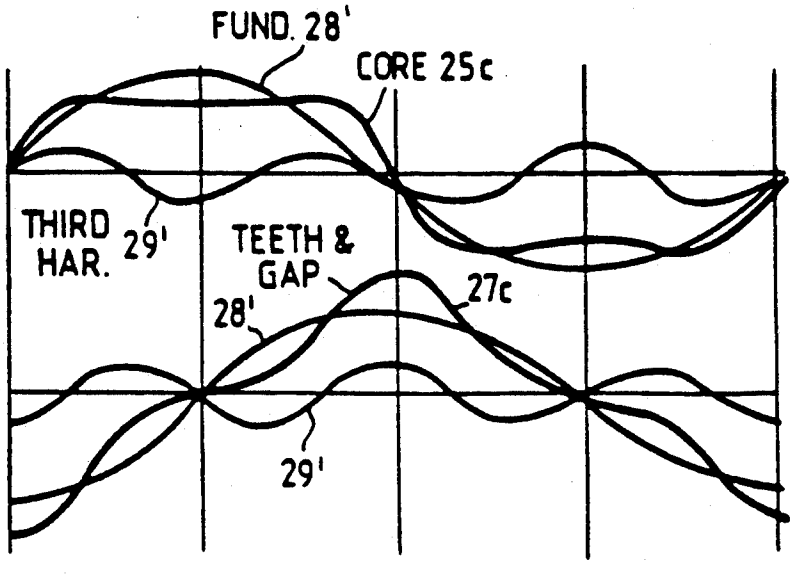

FIG.3

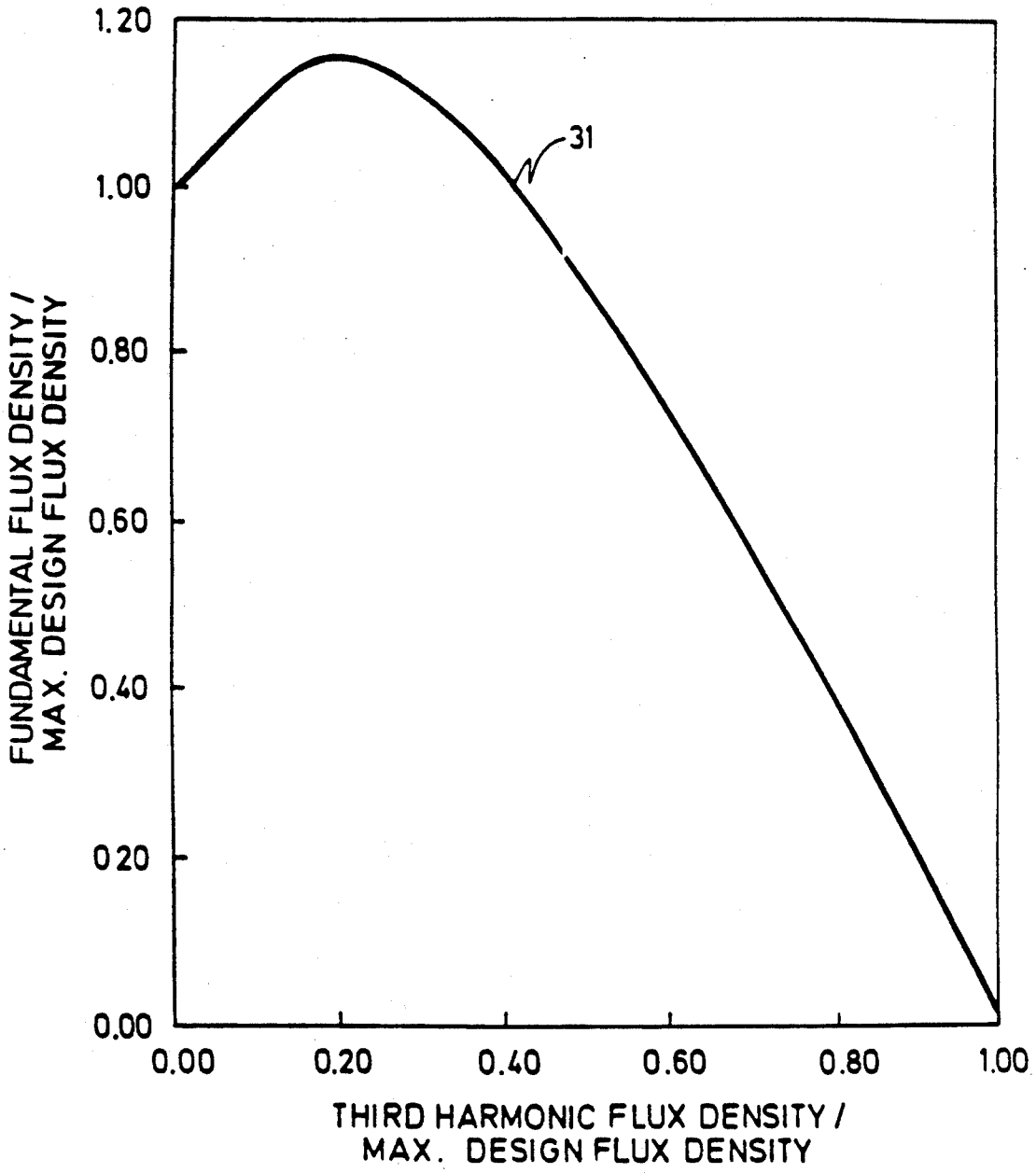
1.20
1.00
0.80
0.60
0.40
0.20
0.00
0.00
0.20
0.40
0.60
0.80
1.00
31
FUNDAMENTAL FLUX DENSITY / MAX. DESIGN FLUX DENSITY
THIRD HARMONIC FLUX DENSITY / MAX. DESIGN FLUX DENSITY

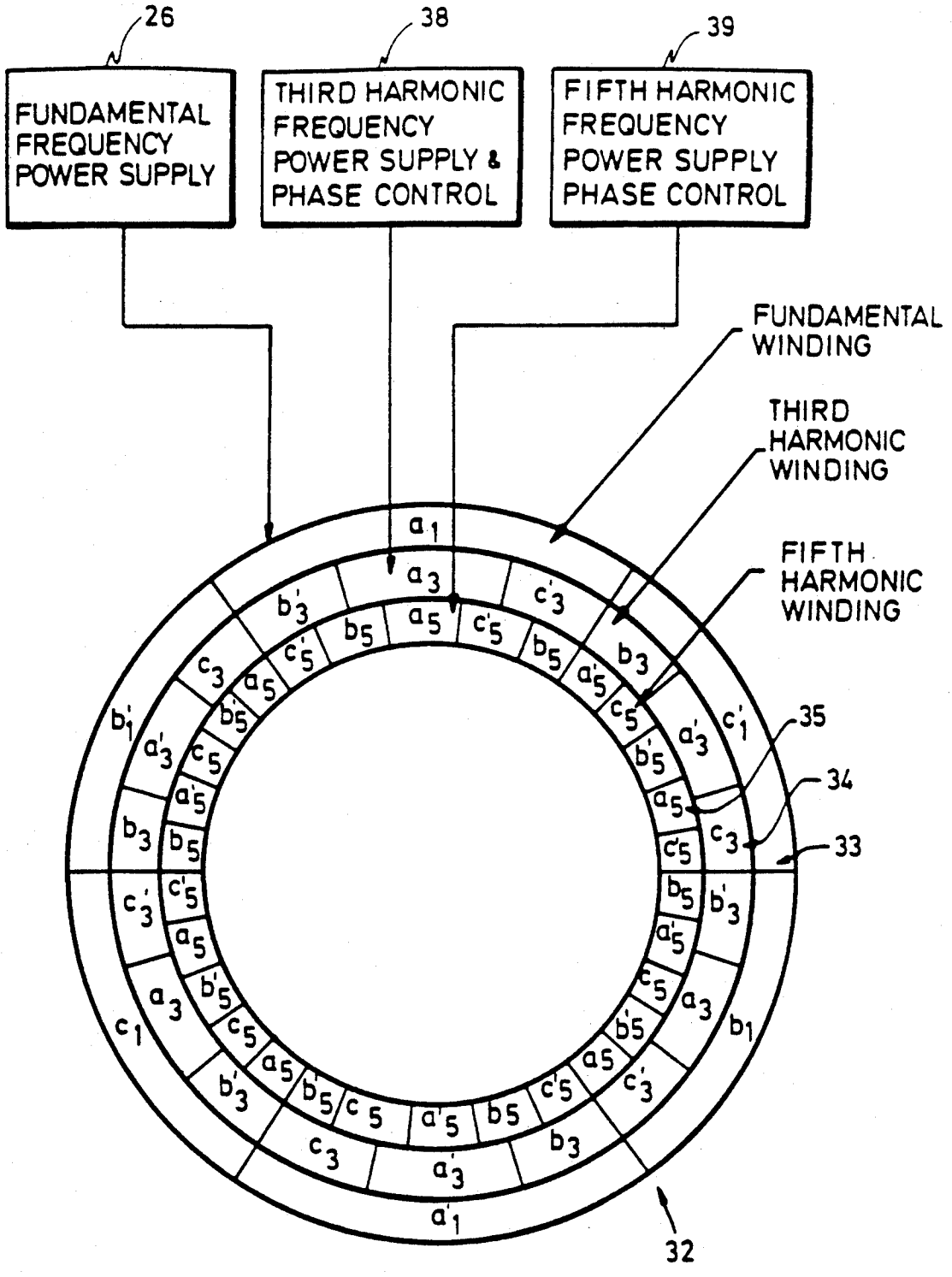
26
38
39
FUNDAMENTAL FREQUENCY POWER SUPPLY
THIRD HARMONIC FREQUENCY POWER SUPPLY & PHASE CONTROL
FIFTH HARMONIC FREQUENCY POWER SUPPLY PHASE CONTROL
FUNDAMENTAL WINDING
THIRD HARMONIC WINDING
FIFTH HARMONIC WINDING
35
34
33
32

FIG.4

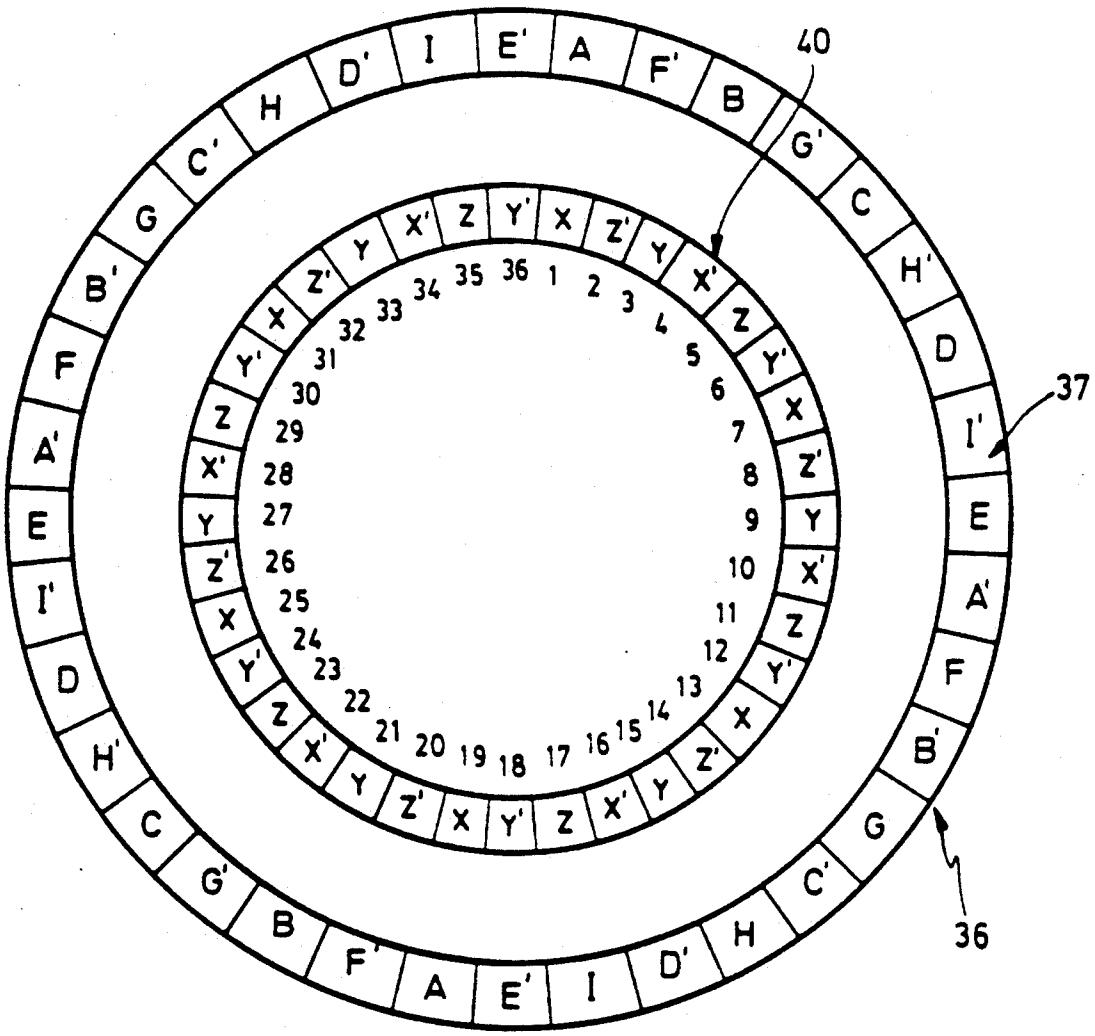
40
37
36
D' I E' A F' B G' C H' D I' E A' F B' G C' H
G B' F A' E I' D H' C G' B F' A E' I D' H C' G B F A E I D'
1 2 3 4 5 6 7 8 9 10 11 12 13 14 15 16 17 18 19 20 21 22 23 24 25 26 27 28 29 30 31 32 33 34 35 36
X' Z Y' X Z' Y X' Z Y' X Z' Y X' Z Y' X Z' Y X' Z Y' X Z' Y X' Z Y' X Z' Y X' Z Y' X Z' Y X' Z Y' X Z' Y

FIG.5

FIG.6

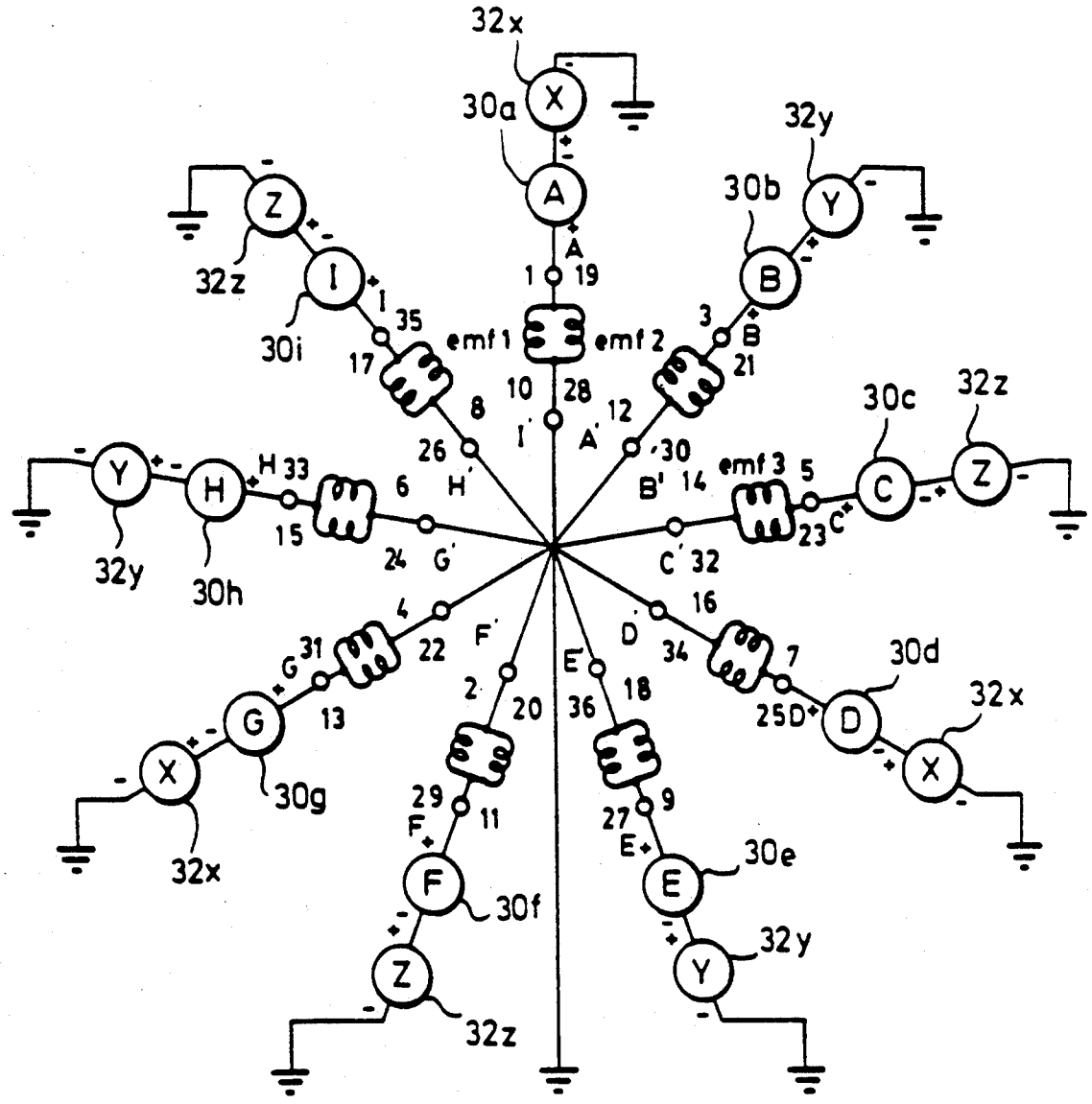
32x
30a
X
A
32y
30b
Y
B
Z
32z
I
30i
emf 1
emf 2
emf 3
30c
C
H
30h
G
30g
D
30d
F
30f
E
30e
1
19
35
17
3
21
10
28
8
12
26
30
6
33
15
14
5
23
24
32
4
22
16
34
7
31
13
2
20
36
18
25
29
11
27
9

FIG.7

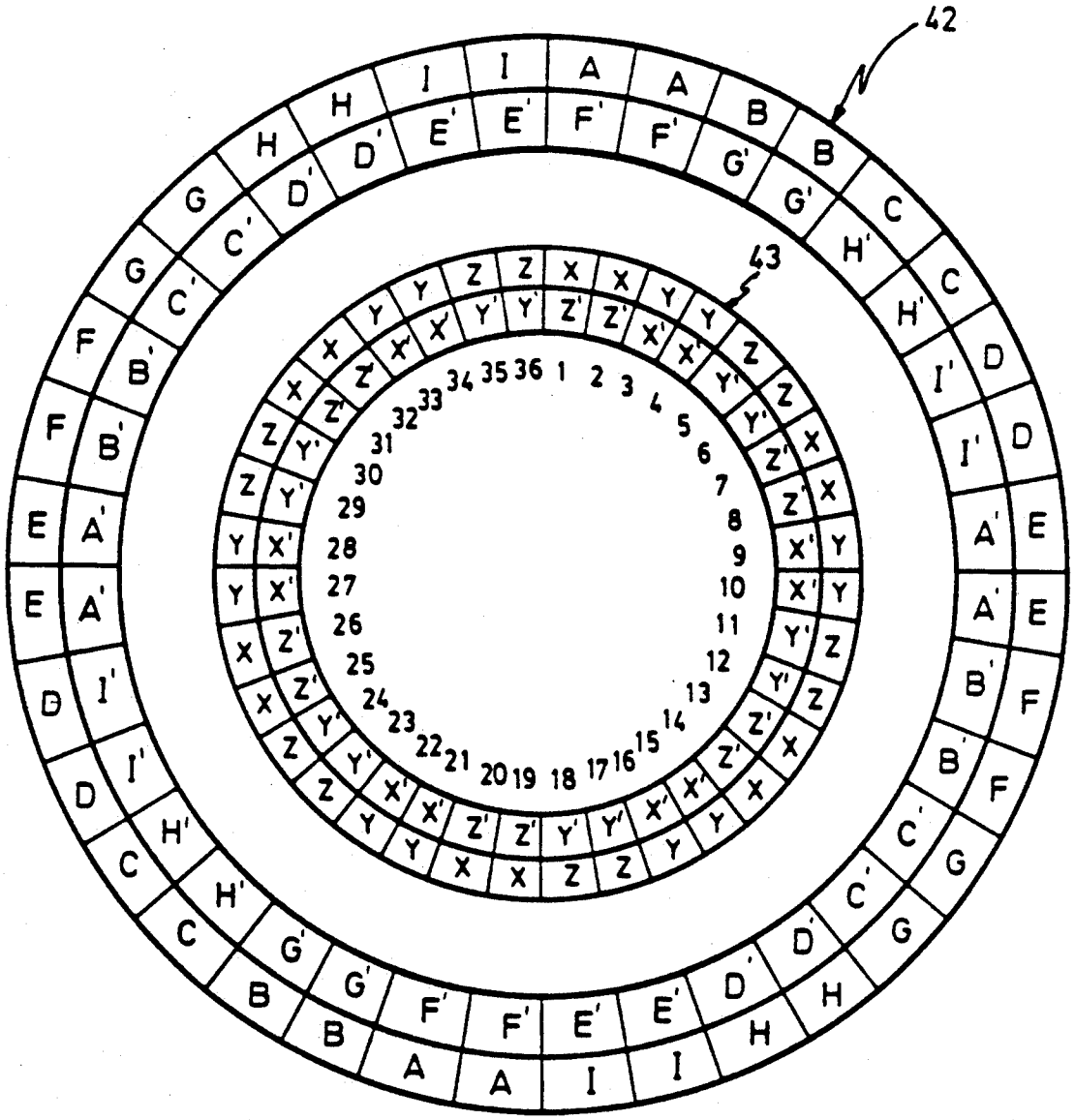

FIG.8

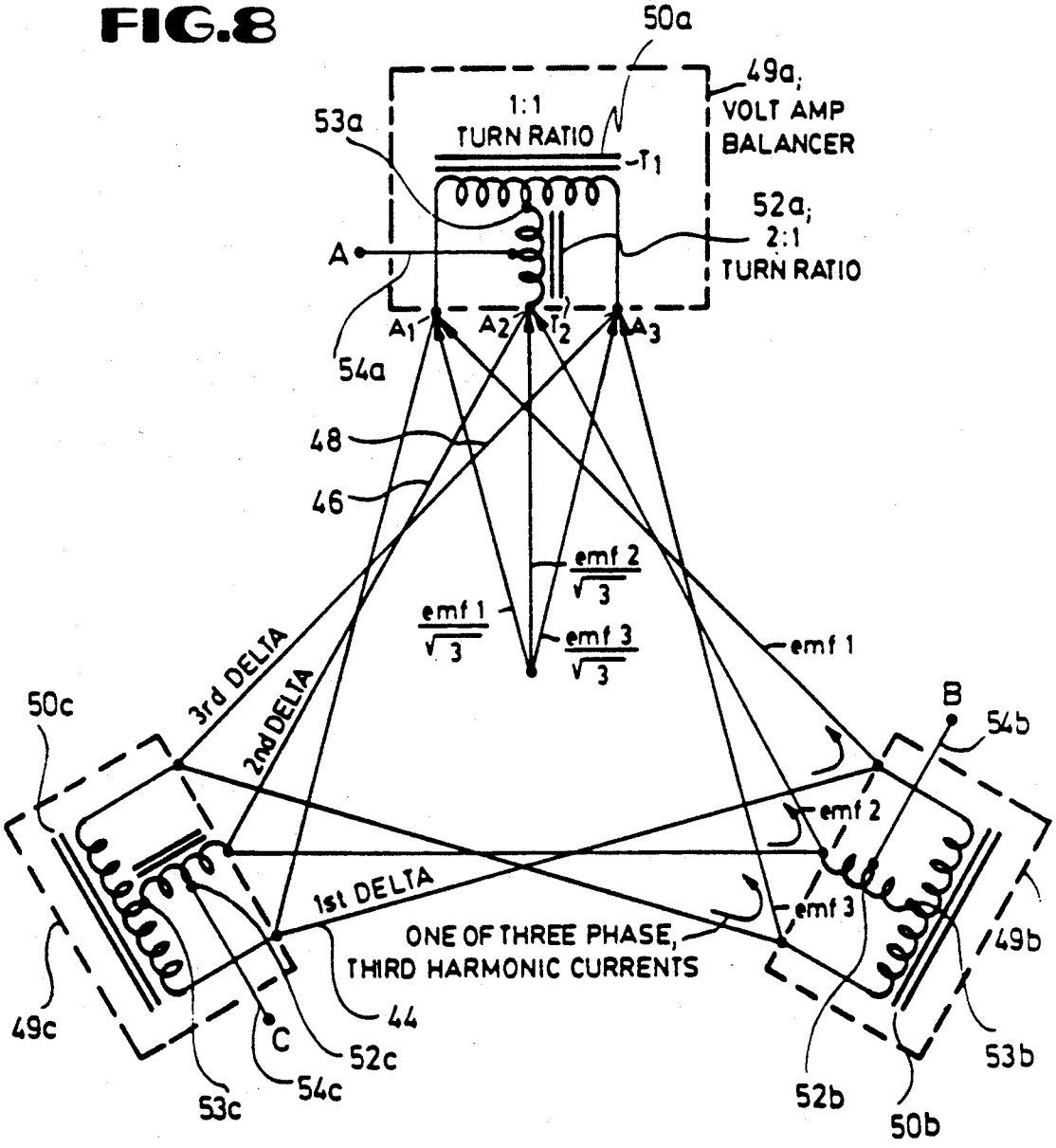
50a
49a;
VOLT AMP
BALANCER
1:1
TURN RATIO
T1
53a
52a;
2:1
TURN RATIO
A
A1
A2
T2
A3
54a
48
46
emf 2
√3
emf 1
√3
emf 3
√3
emf 1
3rd DELTA
2nd DELTA
50c
B
54b
emf 2
1st DELTA
emf 3
ONE OF THREE PHASE,
THIRD HARMONIC CURRENTS
49b
49c
44
C
52c
54c
53c
53b
52b
50b

FIG.9

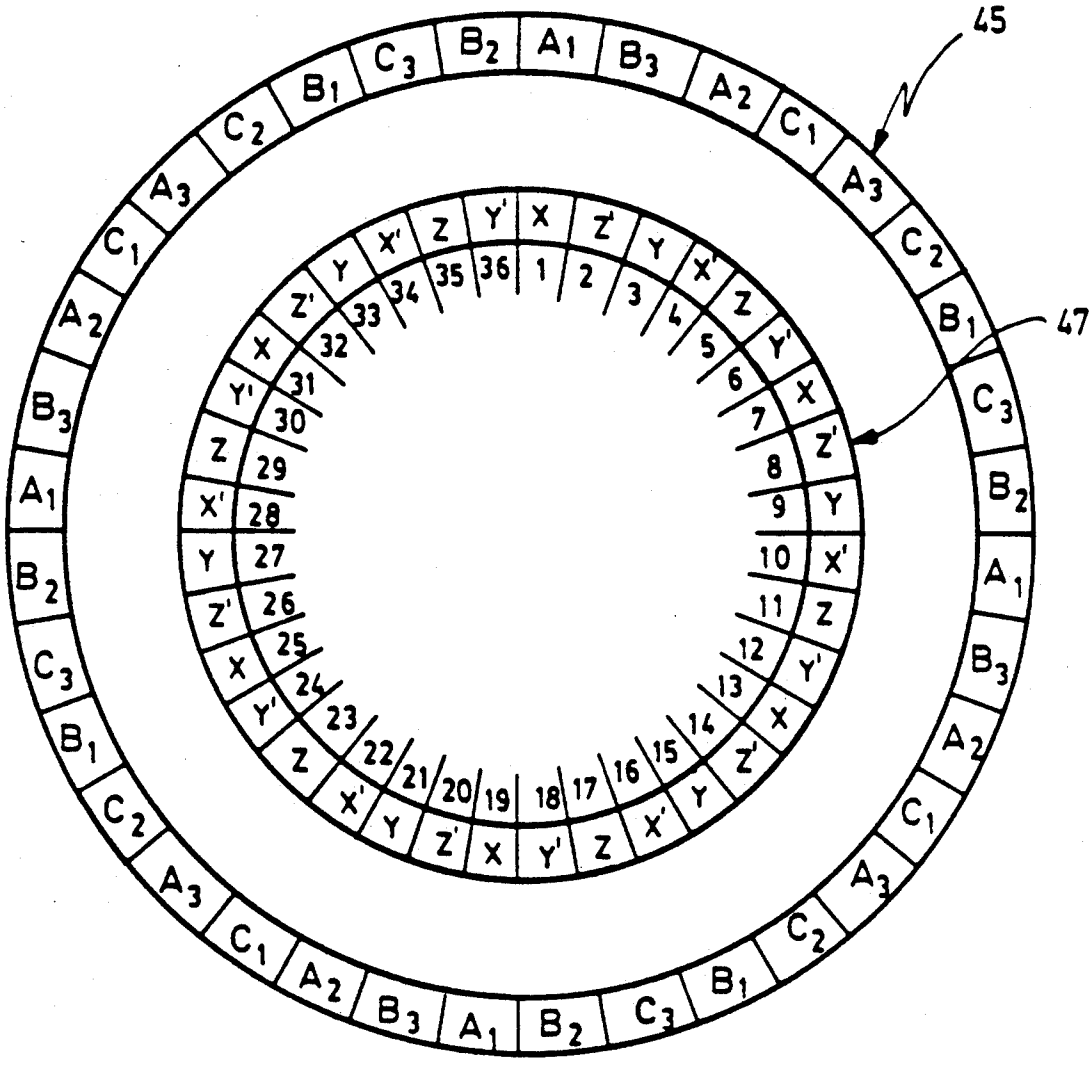
45
47
A1 B3 A2 C1 A3 C2 B1 C3 B2
B2 A1 B3 A2 C1 A3 C2 B1 C3
C3 B2 A1 B3 A2 C1 A3 C2 B1
B1 C3 B2 A1 B3 A2 C1 A3 C2
C2 B1 C3 B2 A1 B3 A2 C1 A3
A3 C2 B1 C3 B2 A1 B3 A2 C1
C1 A3 C2 B1 C3 B2 A1 B3 A2
A2 C1 A3 C2 B1 C3 B2 A1 B3
B3 A2 C1 A3 C2 B1 C3 B2 A1

FIG.10

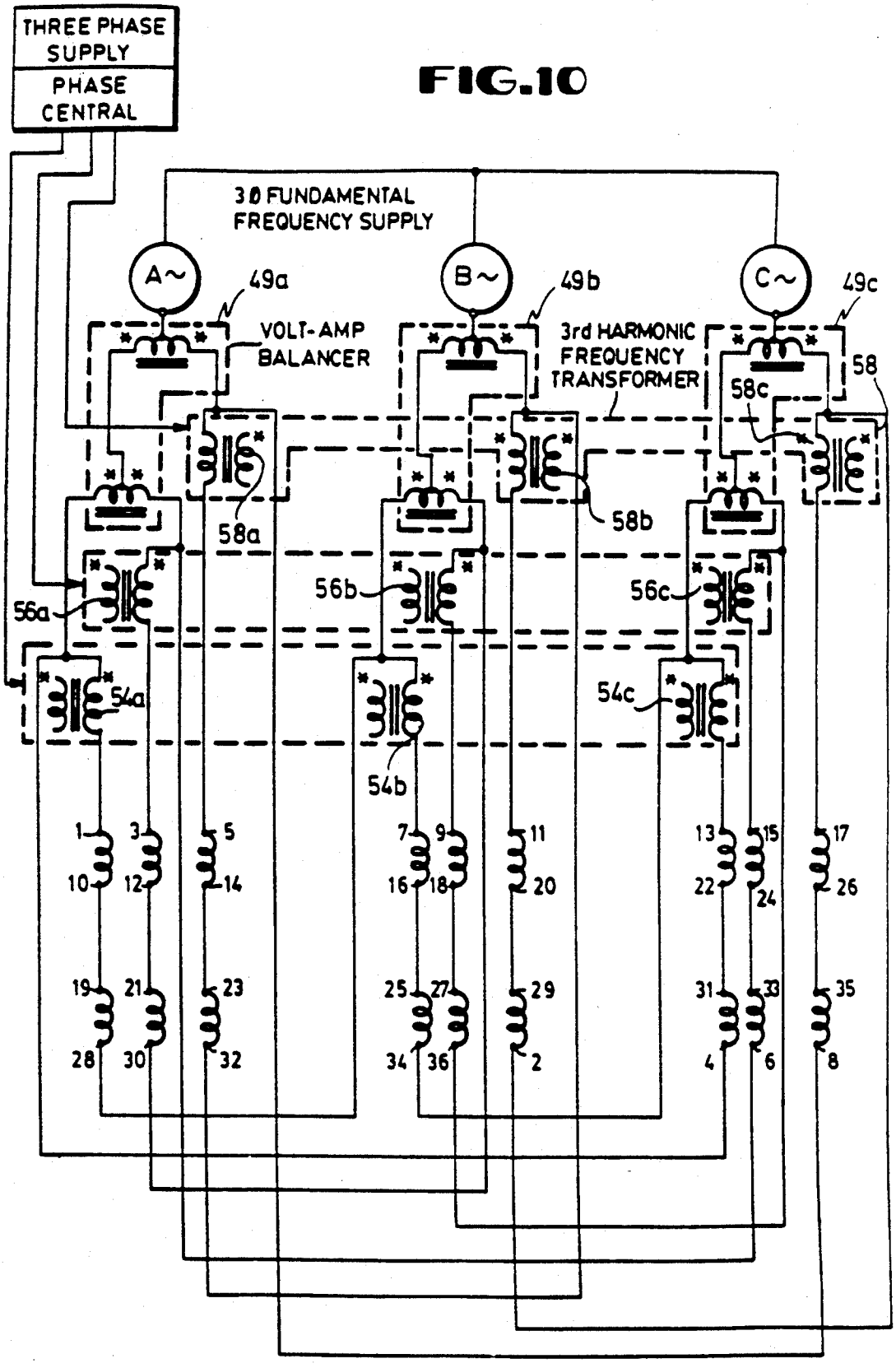
THREE PHASE SUPPLY
PHASE CENTRAL
3Ø FUNDAMENTAL FREQUENCY SUPPLY
A~
B~
C~
49a
49b
49c
VOLT-AMP BALANCER
3rd HARMONIC FREQUENCY TRANSFORMER
58
58a
58b
58c
56a
56b
56c
54a
54b
54c
1
3
5
7
9
11
13
15
17
10
12
14
16
18
20
22
24
26
19
21
23
25
27
29
31
33
35
28
30
32
34
36
2
4
6
8

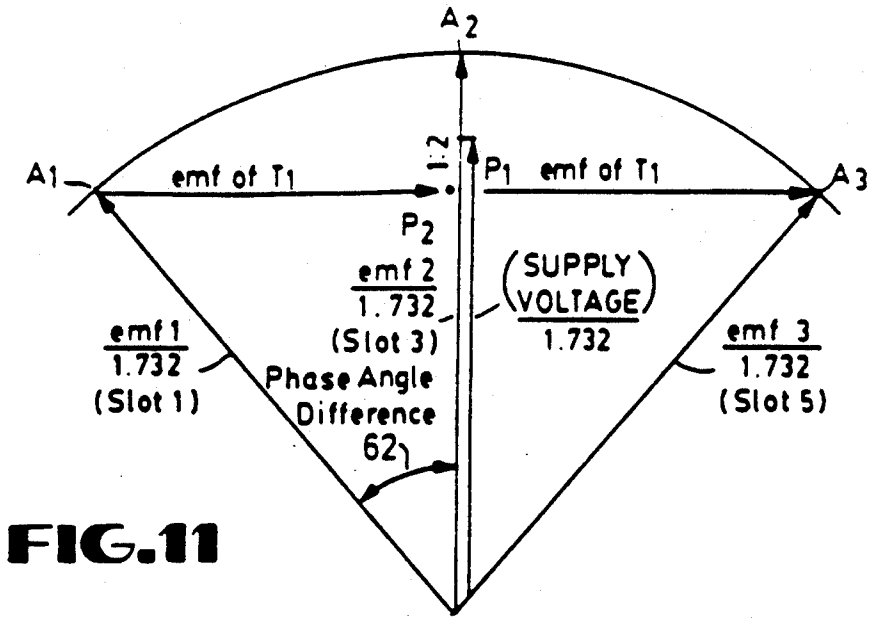
A2
A1
emf of T1
1:2
P1 emf of T1
A3
P2
emf 2
1.732
(Slot 3)
(SUPPLY VOLTAGE)
1.732
emf 1
1.732
(Slot 1)
Phase Angle Difference
62
emf 3
1.732
(Slot 5)

FIG.11

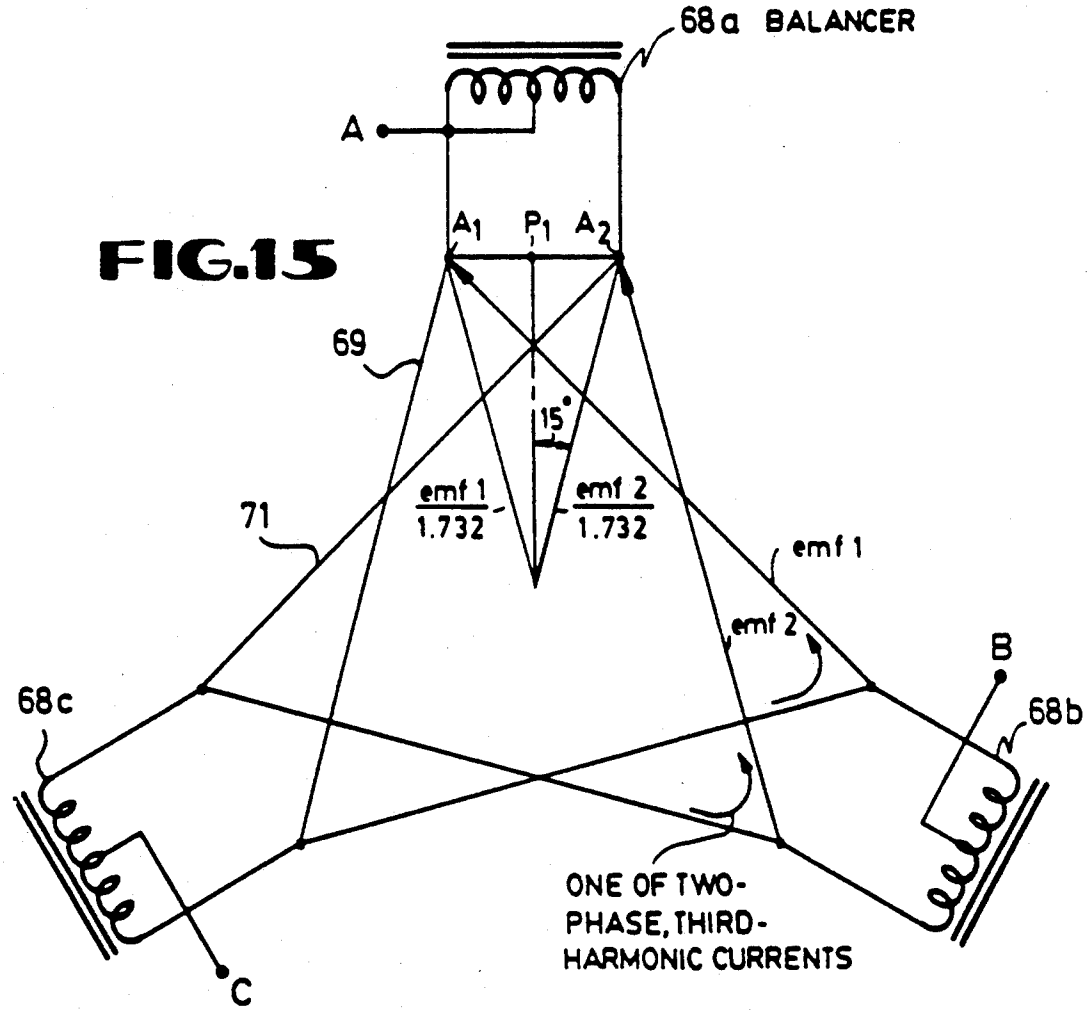
68a BALANCER
A
A1 P1 A2
69
15°
emf 1
1.732
emf 2
1.732
71
emf 1
emf 2
B
68c
68b
ONE OF TWO-PHASE, THIRD-HARMONIC CURRENTS
C

FIG.15

FIG.12

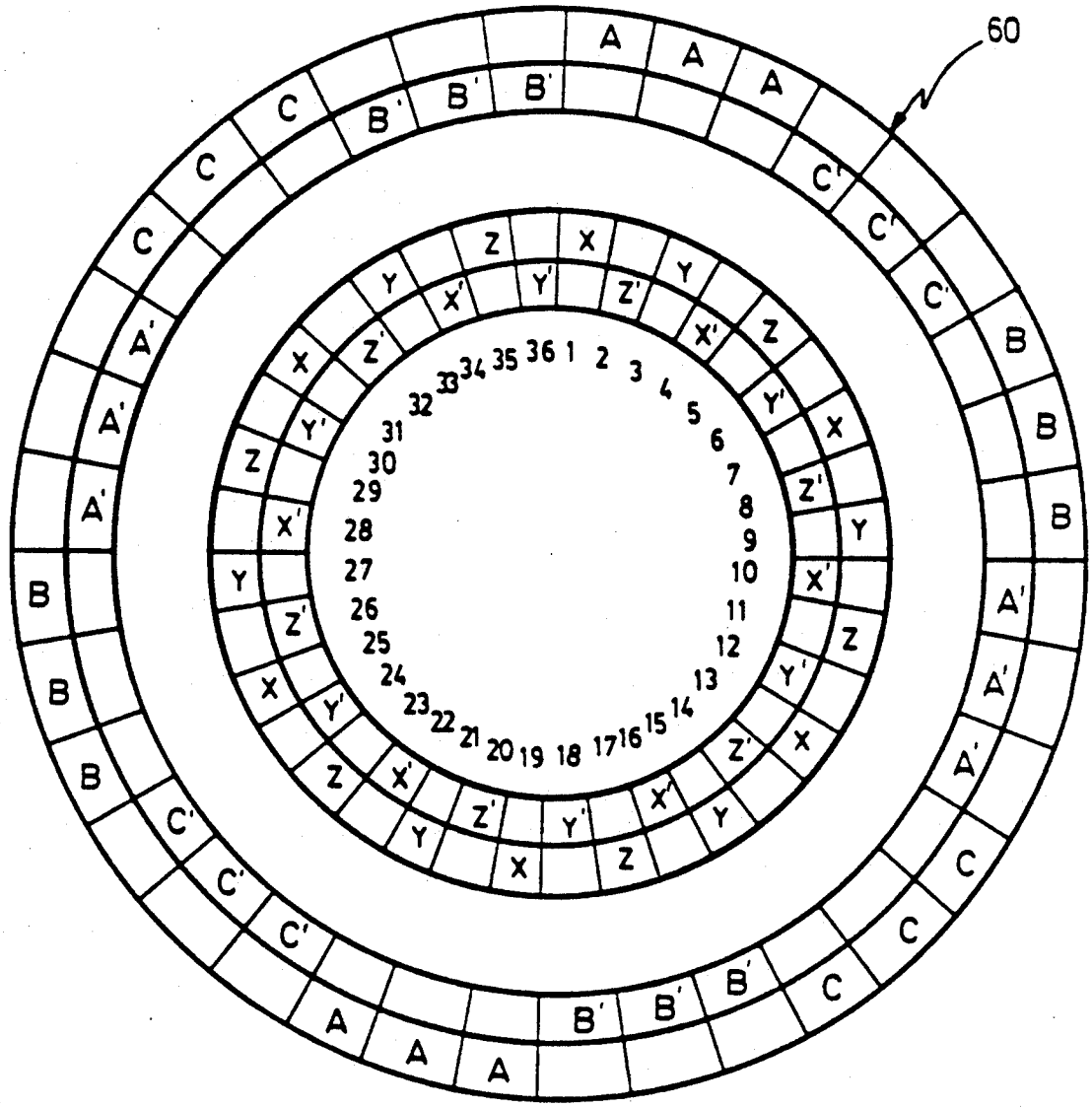

FIG.13

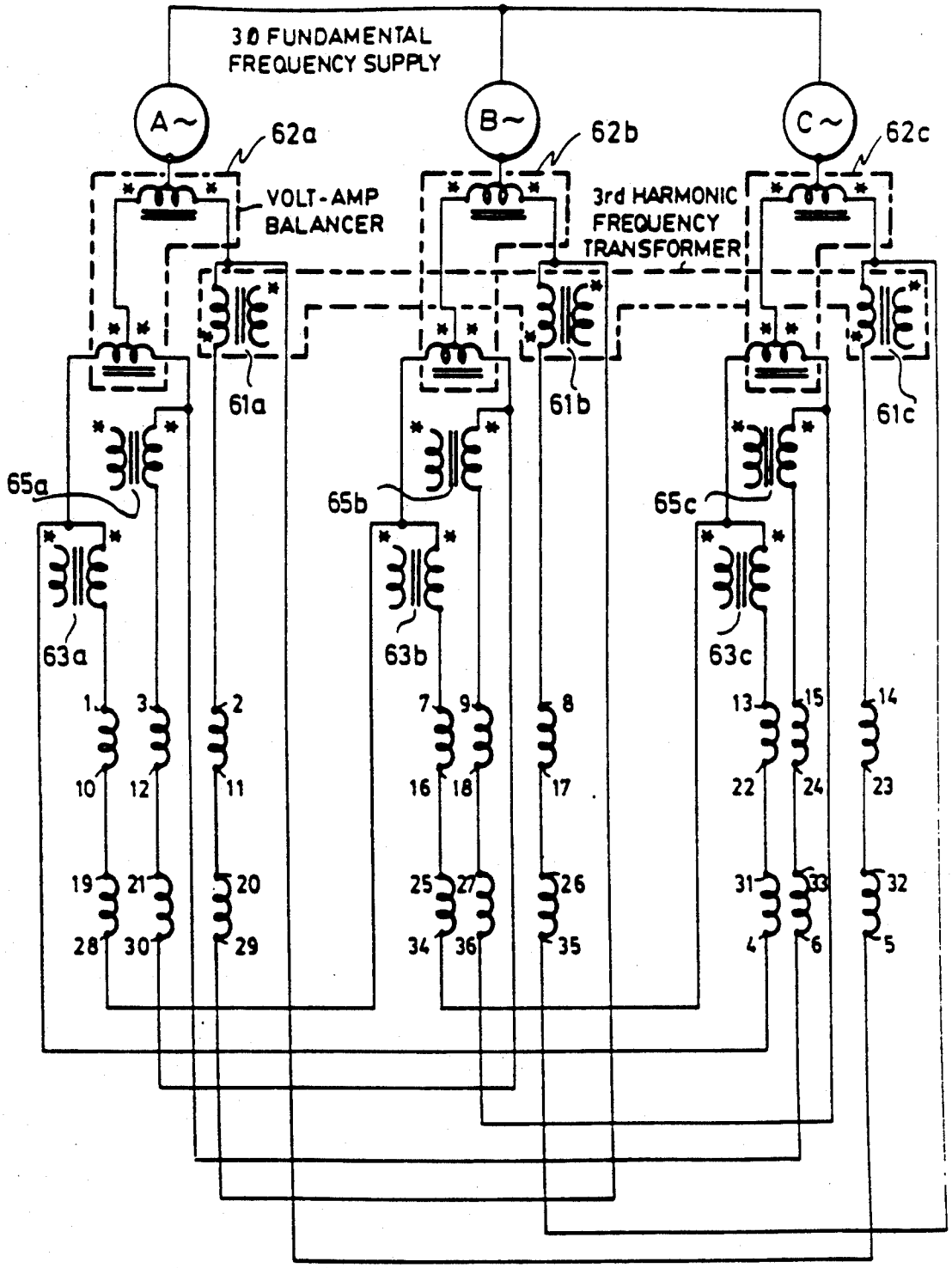
3Ø FUNDAMENTAL FREQUENCY SUPPLY
A~
B~
C~
62a
62b
62c
VOLT-AMP BALANCER
3rd HARMONIC FREQUENCY TRANSFORMER
61a
61b
61c
65a
65b
65c
63a
63b
63c
1
3
2
7
9
8
13
15
14
10
12
11
16
18
17
22
24
23
19
21
20
25
27
26
31
33
32
28
30
29
34
36
35
4
6
5

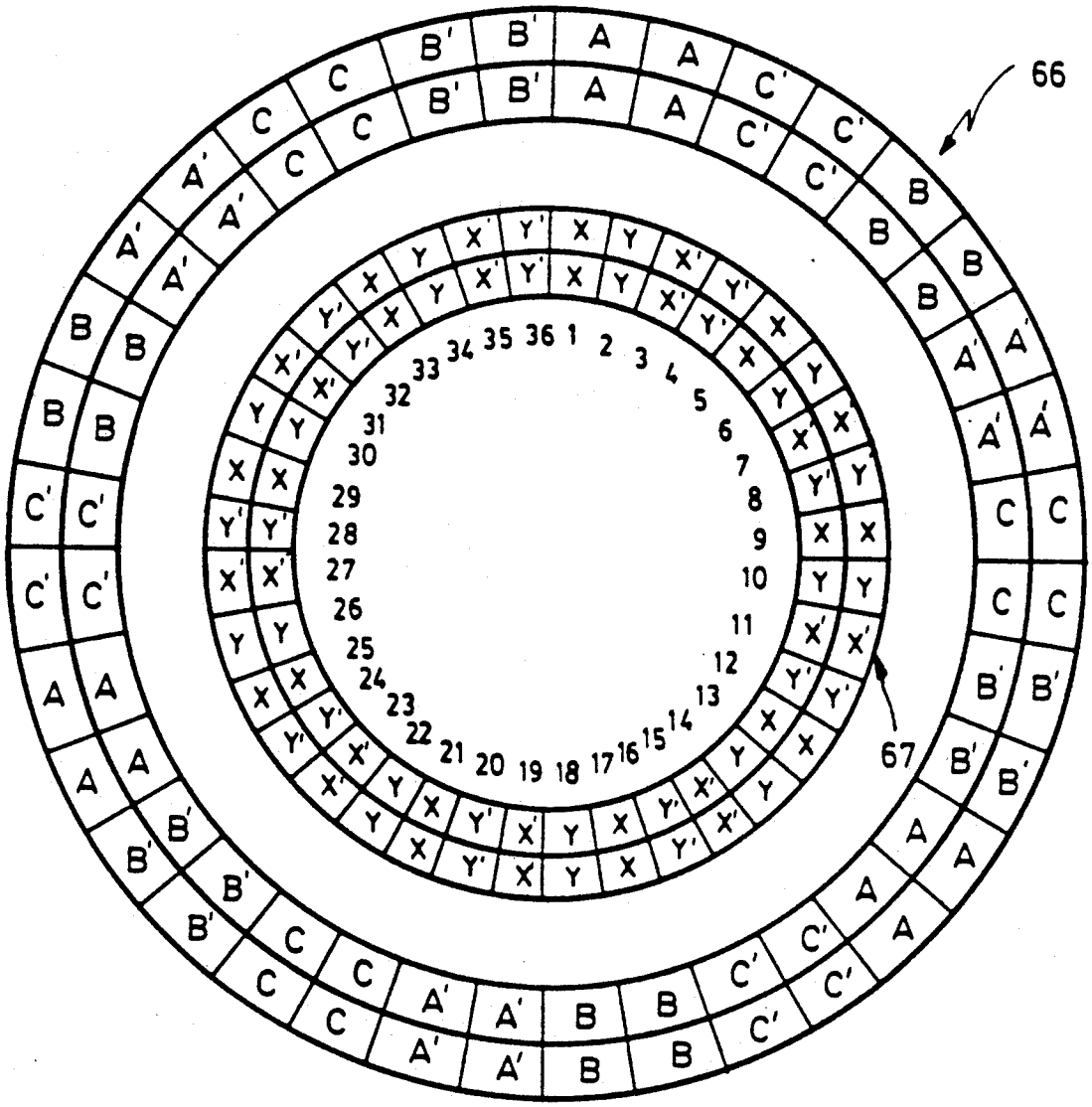


FIG.14

FIG.16

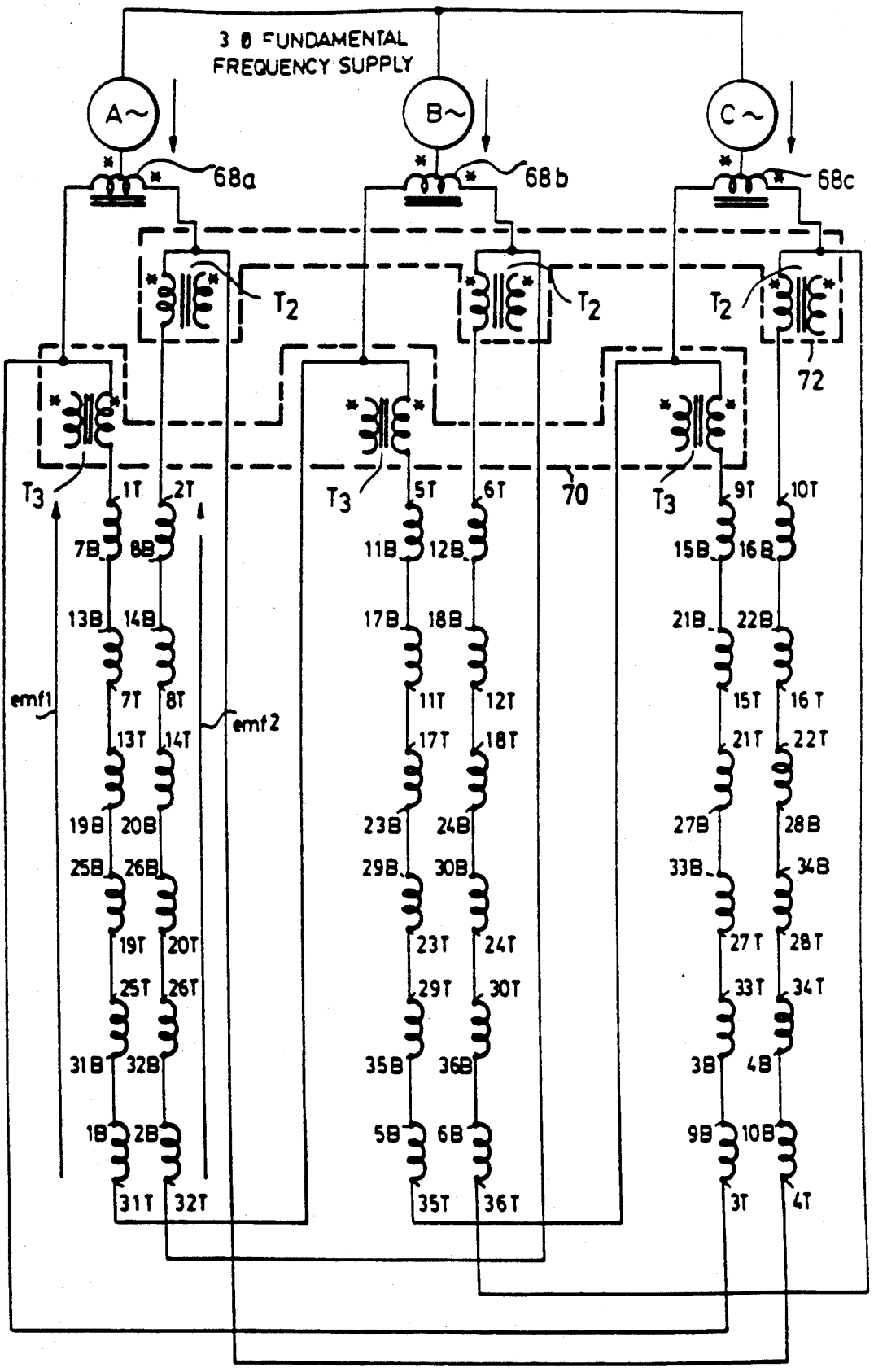
3 Ø FUNDAMENTAL
FREQUENCY SUPPLY
A~
B~
C~
68a
68b
68c
T2
T2
T2
72
T3
T3
T3
70
1T
2T
5T
6T
9T
10T
7B
8B
11B
12B
15B
16B
13B
14B
17B
18B
21B
22B
emf1
7T
8T
11T
12T
15T
16T
emf2
13T
14T
17T
18T
21T
22T
19B
20B
23B
24B
27B
28B
25B
26B
29B
30B
33B
34B
19T
20T
23T
24T
27T
28T
25T
26T
29T
30T
33T
34T
31B
32B
35B
36B
3B
4B
1B
2B
5B
6B
9B
10B
31T
32T
35T
36T
3T
4T

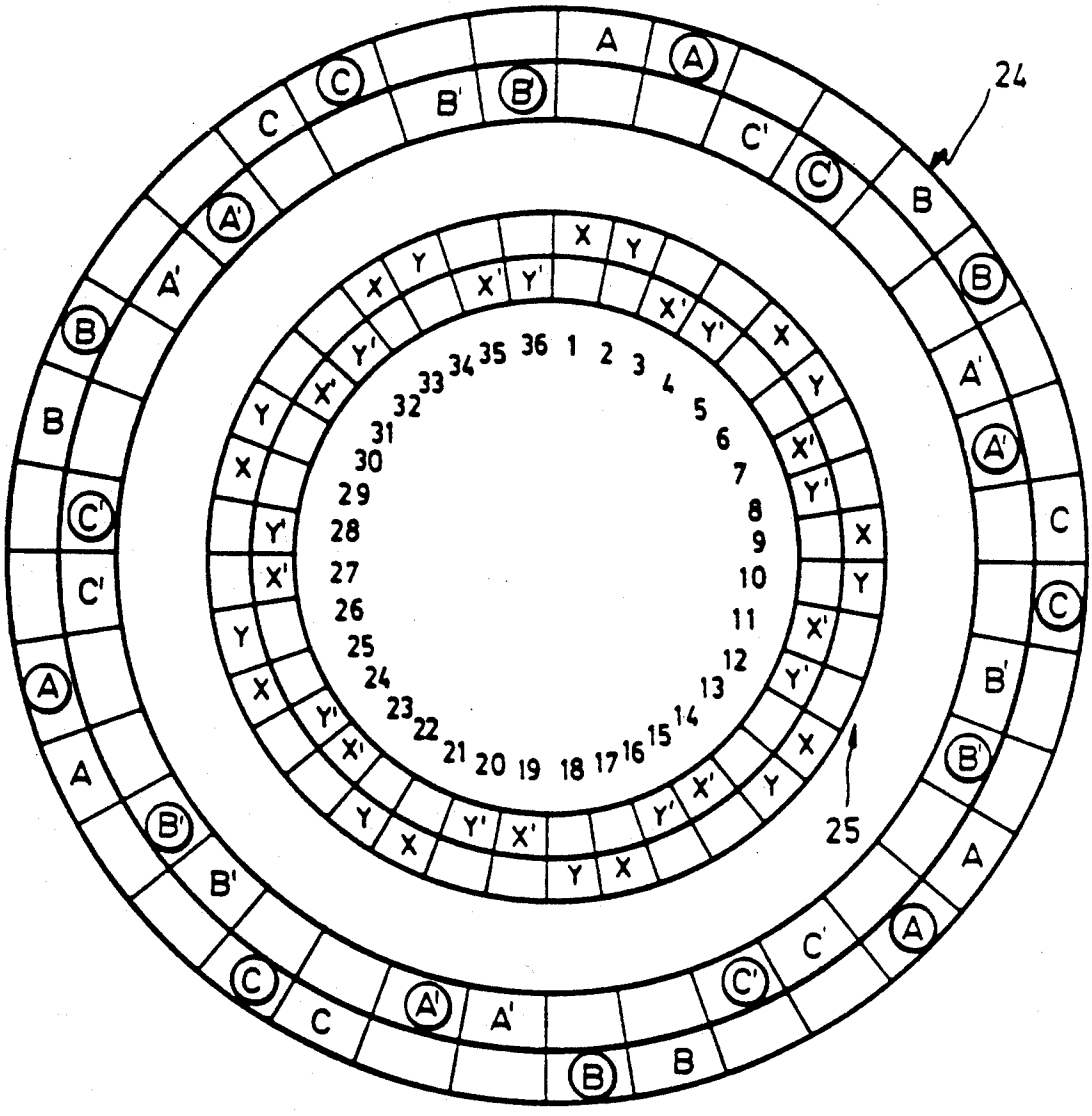


FIG.17

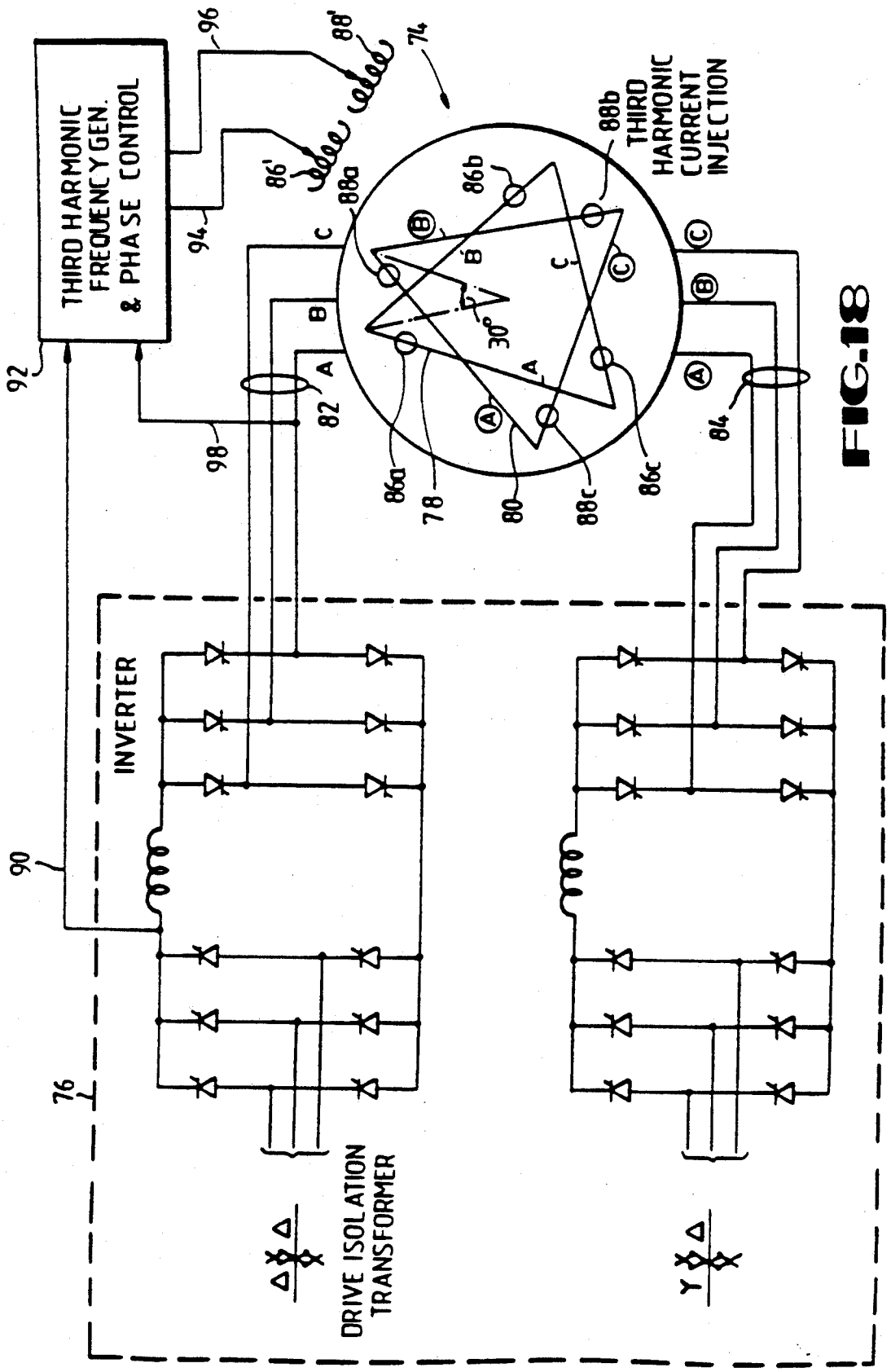
THIRD HARMONIC FREQUENCY GEN. & PHASE CONTROL
INVERTER
DRIVE ISOLATION TRANSFORMER
88b THIRD HARMONIC CURRENT INJECTION
74
76
78
80
82
84
86a
86b
86c
88a
88c
88'
86'
90
92
94
96
98
30°
Δ Δ
Y Δ

FIG.18

# METHOD AND APPARATUS FOR IMPROVING PERFORMANCE OF AC MACHINES

This is a continuation of co-pending application Ser. No. 888,818 filed on Jul. 22, 1986, now abandoned.

## BACKGROUND OF THE INVENTION

The present invention relates generally to methods and apparatus for improving the performance of alternating current (AC) machines, and more specifically relates to methods and apparatus for improving the performance of polyphase AC machines through the injection of harmonic frequencies into the excitation current.

With conventional polyphase AC machines, both induction and synchronous, the machines are typically operated by a single frequency source. The machines have armature windings to which the single frequency sine waves are applied. The ideal performance of conventional polyphase AC machines would include a sinusoidal air-gap flux wave of constant amplitude rotating around the air-gap at synchronous speed. In this theoretical, ideal polyphase AC machine, the constant amplitude flux wave will produce a constant electromagnetic torque. The torque of the machine is monotonically dependent upon this constant amplitude flux wave. This ideal situation may be approximated in large scale machines.

In conventional AC machines the magnetic flux per pole of the machine is proportional to the area of ½ sine wave of the air-gap flux wave of the machine. Typically, a conventional AC machine is designed to operate with at least one of the magnetic members, the iron cores or teeth, of the machine in flux saturation. In conventional machines, the saturation flux densities of the iron, or other magnetic members, of the stator and rotor determine the maximum amplitude of the air-gap flux wave. In conventional machines, therefore, the amplitude of the fundamental flux sine wave determines the maximum power output of the machine. This is true even though maximum use is not made of all of the flux capability of the magnetic members.

In conventional AC machines, undesirable space harmonics are typically established in the air-gap flux waves. These naturally-arising space harmonics occur as a function of the particular machine design when excited by a fundamental frequency. Factors such as slots in the machines and core saturation contribute to the generation of these undesirable space harmonics. These space harmonic flux waves are undesirable because they typically rotate in the air-gap at speeds other than that at which the fundamental flux wave rotates. Additionally, the space harmonic flux waves can be travelling in either a forward or backward direction, as well as at different speeds, relative to the fundamental flux wave. For example, a naturally-arising fifth space harmonic flux wave will travel in a reverse direction relative to the fundamental flux wave and will travel at 1/5 the speed of the fundamental flux wave. Similarly, a naturally-arising seventh space harmonic flux wave will travel in the same direction as the fundamental flux wave, but at 1/7 the speed. These space harmonic flux waves can interact with the squirrel cage winding in an induction motor, or with the damper winding in a synchronous motor, to produce a braking torque which reduces the useful output of the machine. Additionally, these naturally-generated space harmonic flux waves



can interact with each other, and with the fundamental flux wave, to cause pulsations in the torque of the machine, as well as unwanted mechanical vibrations.

Accordingly, the present invention provides a new method and apparatus for constructing and operating a polyphase AC machine whereby a harmonic flux wave will travel in the same direction, and at the same (synchronous) speed, as the fundamental flux wave and whereby the fundamental flux wave is augmented in response to the harmonic flux wave so as to achieve improved electromagnetic loading in the magnetic path of the machine; both achievements serving to improve the useful output of a given machine.

## SUMMARY OF THE INVENTION

The methods and apparatus of the present invention improve the performance of polyphase AC machines through excitation of the machine with frequencies which are odd harmonics of the fundamental excitation frequency. This odd harmonic excitation serves to improve performance of the machine in two ways: (a) the flux distribution caused by the harmonic excitation enables a greater fundamental flux distribution and thereby yields an improved total flux distribution in the magnetic path of the machine, thereby causing improved magnetic loading of the material, and (b) if the other conductors on the machine (typically on the rotor) contain conductors or coils responsive to the harmonic frequencies applied to the armature, or if the pole shape of the rotor produces a permeance wave responsive to the harmonic frequencies, the harmonic flux distributions themselves will yield increased torque in the machine.

As will be discussed in more detail later herein, this odd harmonic excitation can be practiced in a variety of ways, including: separate coils for fundamental excitation and for each odd harmonic excitation; multiphase power supplies for both fundamental and harmonic frequencies coupled to a common winding; the use of a multiplicity of delta-connected windings coupled to one another through volt-amp balancers, with separate phases of the harmonic excitation current applied to each delta; and a common set of delta-connected windings actuated through use of a multiphase inverter, with a separate phase of the harmonic excitation current applied to each delta.

## BRIEF DESCRIPTION OF THE DRAWINGS

FIGS. 1A–D graphically depict the flux distribution in a section of the magnetic path of an AC machine. FIG. 1A depicts a sinusoidal flux distribution. FIG. 1B depicts a square wave flux distribution. FIG. 1C depicts a total flux distribution achieved by adding an increased level of fundamental flux distribution with a third harmonic flux distribution. FIG. 1D depicts a total flux distribution achieved by adding a further increased fundamental flux distribution with third and fifth harmonic flux distributions.

FIGS. 2A–C graphically depict the flux distributions in different portions of an AC machine. FIG. 2A depicts the flux distributions with the machine operated with neither of the magnetic members in saturation. FIG. 2B depicts how the flux distributions in a typical low speed machine can be adjusted through practice of the present invention to improve machine performance. FIG. 2C depicts how the flux distributions in a typical high speed machine can be adjusted through practice of the present invention to improve machine performance.

FIG. 3 graphically depicts the relationship between the ratio of the fundamental flux density to the maximum design flux density of a machine and the ratio of the third harmonic flux density to the maximum design flux density of the machine.

FIG. 4 schematically depicts the phase belts for a machine in accordance with the present invention having separate windings for fundamental, third harmonic and fifth harmonic frequencies and power supplies for exciting such machine.

FIG. 5 schematically depicts a single layer winding for a machine in accordance with the present invention to be excited through combined fundamental and third harmonic power sources.

FIG. 6 depicts the power source connections to the machine of FIG. 5.

FIG. 7 schematically depicts a machine in accordance with the present invention having double layer windings with a per-unit pitch of less than 1.

FIG. 8 depicts the connections and the back emf potential points for a machine when such machine is excited through use of volt-amp balancers.

FIG. 9 depicts the slot electrical connections for a machine to be excited as in FIG. 8.

FIG. 10 schematically depicts the connections for the machine of FIGS. 8-9.

FIG. 11 depicts the fundamental frequency back emf voltage differences between harmonic phases found in alternate slots in the machine of FIGS. 8-10.

FIG. 12 schematically depicts a machine with 60° phase belt connections for excitation through use of volt-amp balancers.

FIG. 13 schematically depicts the electrical connections for the machine of FIG. 12.

FIG. 14 schematically depicts the windings of an alternative embodiment of a machine to be excited through use of volt-amp balancers.

FIG. 15 schematically depicts the connections and the fundamental frequency back emf potential points for the machine of FIG. 14.

FIG. 16 schematically depicts the electrical connections for the machine of FIGS. 14 and 15.

FIG. 17 schematically depicts the winding configuration for the armature of a machine to be excited through use of a multiphase inverter.

FIG. 18 schematically depicts the windings of the machine of FIG. 17.

## DETAILED DESCRIPTION OF THE PREFERRED EMBODIMENTS

The present invention utilizes the injection of harmonic frequencies into the excitation current of a polyphase AC machine to optimize the flux densities in both the iron portions and the air-gap of the machine. Those skilled in the art will recognize that the resulting increase in total flux in the machine will yield improved performance of the machine.

Referring first to FIGS. 1A-D of the drawings, each Figure graphically depicts the total flux distribution in a section of the magnetic path of an AC machine under different conditions. The ordinate of each graph is the phase angle while the abscissa represents the ratio of the local flux distribution (B) to the maximum design flux density ($B_S$) in the machine.

FIG. 1A depicts a sinusoidal flux distribution **10** in the magnetic path, resulting from a sinusoidal excitation current. Flux distribution **10** has a peak amplitude **12**. FIG. 1B depicts a square wave flux distribution **14** having an amplitude **16** equal to the peak amplitude **12** of sinusoidal distribution **10** in FIG. 1A. The theoretical flux per pole of a machine actuated with the square wave flux distribution **14** of FIG. 1B is 1.57 times the flux per pole of a machine actuated by sinusoidal distribution **10** of FIG. 1A. Such a theoretical machine would make optimal usage of the flux capacity of the iron portions of the machine. Square waves, however, cannot be produced in practical machines because practical power supplies are not available.

A square wave can be synthesized by an infinite set of odd harmonics. Although such synthesization is impractical, a square wave can be approximated by a finite set of odd harmonics. FIG. 1C depicts a flux distribution **18** achieved by adding an increased fundamental flux distribution **19** to the flux distribution of the third harmonic **20**. The flux per pole of flux distribution **18** is 1.23 times that of the sinusoidal flux distribution **10** resulting from only fundamental excitation.

FIG. 1D depicts a flux distribution **22** achieved by adding a further increased fundamental flux distribution **21** to an increased third harmonic flux distribution **23** and a fifth harmonic flux distribution **24**. The flux per pole of flux distribution **22** is 1.31 times that of sinusoidal flux distribution **10**.

Additional correlated odd harmonic flux distributions will allow further increases in the relative flux per pole relative to a sinusoidal flux distribution **10** resulting from fundamental excitation only. The further addition of these odd harmonic flux distributions will approach the flux per pole of square wave flux distribution **14**. However, additional odd harmonic flux distributions will yield smaller incremental changes than those provided by the addition of the third and fifth harmonics as depicted in FIGS. 1C and 1D. The addition of the third harmonic flux distribution facilitates the greatest increase in the total flux distribution and will therefore be discussed here in the greatest detail.

Referring now to FIGS. 2A-C, graphically depicted in each figure are the core flux distributions **25***a*, **25***b*, and **25***c* in respective figures, and the teeth and gap flux distributions, **27***a*, **27***b* and **27***c* in respective figures, in a machine under three different conditions. Conventional practice in the design of polyphase AC machines is to design the flux densities in the stator core, the stator teeth, the rotor core and the rotor teeth in such a way as to avoid excessive flux saturation in any particular section. This practice serves to limit magnetization current and core loses to acceptable values. The air-gap flux distribution can be other than a sinusoidal wave form, distortion in the distribution being largely dependent upon the degree of saturation in the magnetic paths.

FIG. 2A depicts the core flux distribution **25***a*, and the teeth and gap flux distribution **27***a* of a machine wherein neither section of the machine is saturated. Each flux distribution is a sinusoid in response to the fundamental frequency excitation. Core flux distribution **25***a* is derived from integration of teeth and gap flux distribution **27***a*, and is therefore 90° apart in space from teeth and gap flux distribution **27***a*.

In reality, a machine will be operated with at least one section of the machine approaching saturation. Further, the degree of saturation in different magnetic paths cannot be totally equal. For example, in a low speed machine having a large number of poles, flux densities in the stator and rotor cores are much lower than the flux densities in the stator and rotor teeth. The reason is that the minimum dimension of each core is

determined by mechanical requirements, such as rigidity, stress, and manufacturing requirements; but is not determined by electromagnetic requirements. Saturation of the teeth is therefore a determining factor for how much flux per pole can be produced in the machine. Conversely, for high speed machines, such as two pole machines, the core sections are typically more saturated than the teeth sections.

The performance, and therefore the rating, of an AC machine is dependent upon the total flux per pole that can be produced in the machine. The present invention facilitates the total flux per pole in a polyphase AC machine to be increased by maintaining or lowering flux density in one magnetic path while increasing the flux density in another magnetic path. This redistributing of the flux is accomplished by adjusting the phases of the harmonic excitation relative to the fundamental excitation. For example, FIG. 2B depicts exemplary flux distributions contemplated through use of the present invention in a low speed machine as discussed above. The density of the core flux **27***b* is increased through use of fundamental flux distribution **28** and third harmonic flux **20** distribution **29**. At the same time, however, the density of teeth and gap flux **27***b* is decreased relative to fundamental flux distribution **28** and third harmonic flux distribution **29**. The injection of third harmonic excitation current to establish third harmonic flux distribution **29**, therefore, facilitates increasing the density of the core flux **25***b* while decreasing the density of teeth and gap flux distribution **27***b*, more evenly distributing the flux in the machine, and, most importantly, facilitating an increase in the total flux per pole in the machine.

FIG. 2C, depicts exemplary flux distributions contemplated through use of the present invention with a high speed machine as discussed above. In FIG. 2C, the phase angle of third harmonic flux distribution **29'** has been changed relative to fundamental flux distribution **28'**. This results in a decrease in the density of core flux **25***c* and facilitates an increase in teeth and gap flux **27***c*. This again promotes a more even flux within the machine and facilitates an increased total flux per pole in the machine.

Referring now to FIG. 3, therein is graphically depicted, by a curve **31**, the relationship between the fundamental flux density and the third harmonic flux density in a machine. The abscissa of the graph of FIG. 3 represents the ratio of the fundamental flux density to the maximum design flux density of a machine, while the ordinate represents the ratio of the third harmonic flux density to the maximum design flux density of the machine. The relation expressed in curve **31** assumes that the total flux density in the machine remains unchanged.

In determining the relative amplitudes for the fundamental and third harmonic excitation voltages, the maximum third harmonic voltage should be applied which will facilitate the maximum fundamental voltage which can be applied which will improve machine performance without exceeding the thermal rating of the machine. In addition to this primary parameter, however, the actual ratio between the fundamental and third harmonic excitation voltages may be affected by secondary factors, such as changes in core losses due to the excitation by both fundamental and third harmonic frequencies, or changes in deleterious naturally-occurring space harmonics as discussed earlier herein, etc. The amplitude and the relative phases of all excitations will be in sync so as to produce optimal flux densities as discussed earlier herein.

Following is a discussion of increased performance of different types of AC machines through use of the present invention. With respect to any of the below discussed polyphase AC machines, because harmonic sinusoids of different frequencies are orthogonal, the fundamental and each harmonic of the stator-produced flux wave will interact to produce torque only with its counterpart in the rotor produced flux wave.

The benefits of the present invention may be achieved with different types of AC machines including, for example: squirrel cage induction motors, wound rotor induction motors, and both salient pole and round rotor synchronous machines. Different practical considerations with respect to the present invention will be found with these different machines, however. A squirrel cage induction motor will experience enhanced torque production from the increased fundamental component facilitated through harmonic injection, as depicted in FIGS. 1C and 1D. Additionally, a squirrel cage induction motor will experience enhanced torque production from each harmonic flux component provided that the conductors forming the squirrel cage on the rotor are finely enough divided to allow each space harmonic of induced current to flow. If the number of bars is so small that one or more space harmonic currents cannot flow, then no torque can be produced by those space harmonics in the stator flux wave.

In a wound rotor induction motor, the number of poles produced by rotor winding is determined by the winding configuration on the rotor. As a consequence, torque will be produced by each flux component in the armature for which there is a corresponding winding having a suitable number of poles on the rotor. For purposes of this discussion, the armature will have a fundamental winding and one or more harmonic windings. If the rotor has only a fundamental winding, the machine will experience enhanced torque from the higher armature fundamental flux density component as seen in FIGS. 1C and 1D. However, if the rotor includes windings having the correct number of poles to interact with the armature harmonic flux distributions, additional torque can be produced by each of these flux distributions also.

With respect to synchronous machines, torque is produced by the interaction of fields produced by the armature excitation with the steady fields produced by direct current in the field winding. The field winding is typically located on the rotor. Space harmonics in the flux wave produced by current in the field winding can be produced by properly shaping the poles in a salient pole machine, or by properly distributing the field winding in a round-rotor machine. If current in the field winding produces only a fundamental component of flux density, torque enhancement will result only from the increased armature fundamental flux component made possible by the harmonic components in the flux wave. However, for each harmonic component in the field-produced flux wave which matches a harmonic in the armature flux wave, further torque enhancement can occur. In a salient pole synchronous machine, if the salient poles are properly shaped, then additional torque can be produced by the harmonic components of the flux wave.

With respect to enhanced performance of any particular machine, any actual increase in the machine's rating must be determined through examination of the

factors that initially set the rating, i.e., electrical heating of the armature winding, electrical heating of the rotor winding in an induction machine, electrical heating of the field winding in a synchronous machine, core loss heating of the magnetic members, and/or mechanical strength of machine components.

Flux distributions as depicted in FIGS. 1C or 1D, can be produced by providing separate sets of polyphase windings for the fundamental and for each desired harmonic. Each harmonic, thus, may be applied to a discrete set of windings. Alternatively, and preferably, however, the fundamental winding will be utilized also for harmonic excitation. This can be done in a variety of ways. For example, in one method of practicing the present invention, the outputs of two multiphase power supplies are coupled together in series to provide fundamental and harmonic excitation of the fundamental winding. Another method utilizes delta-connected windings coupled together through volt-amp balancers to balance the potential and currents of both fundamental and harmonic excitation in the windings. Yet another alternative method utilizes a single winding with a multiphase inverter, as often found with adjustable speed devices, to inject the harmonic excitations onto the fundamental winding.

Referring now to FIG. 4, therein is depicted in schematic form the cross section of phase belts for a machine 32 for excitation by fundamental, third harmonic, and fifth harmonic frequencies and the power supplies for exciting machine 32. Machine 32 is wound with a two-pole, three-phase fundamental winding 33 which will be excited by fundamental frequency supply 26. Third harmonic winding 34 is a six-pole, three-phase winding which will be excited by third harmonic frequency supply 38. Third harmonic frequency supply 38 will contain phase control circuitry as known in the art to assure that the third harmonic frequency is maintained in the desired phase relationship with the fundamental frequency. Fifth harmonic winding 35 is a ten-pole, three-phase winding which will be excited by fifth harmonic frequency supply 39 which also contains phase control circuitry.

A specific phase winding in machine 32 will extend between a pair of letters in a single winding ring, either 33, 34 or 35, indicated by that letter and its prime. For example, in the winding schematic the phase winding extending between a and a' in fundamental winding ring 33 is a single phase fundamental winding. Similarly, the third harmonic windings a to a' in winding ring 34 represent third harmonic phase belts. Pairs of third harmonic windings may be connected either in series or parallel or may be switched from one connection to the other for ease in starting.

As discussed above, in machine 32 each winding, fundamental winding 33, third harmonic winding 34 and fifth harmonic winding 35, will be excited by a separate three phase power supply, 26, 38 and 39, respectively. As determined above, the frequency of the third harmonic excitation current will be three times the fundamental frequency, and the frequency of the fifth harmonic excitation current will be five times that of the fundamental frequency. The three frequencies will be phase controlled to be in sync with one another as depicted, for example, in FIG. 1D.

Each harmonic winding must have a number of poles ($P_h$) equal to:

$$P_h = np \quad (1)$$

where:

n is the order of the harmonic (third, fifth, etc.); and

p is the number of poles in the fundamental winding.

For example, for an armature having a fundamental winding having four poles (p=4), the third harmonic winding must have $3\times4=12$ poles. The fundamental winding will be excited at the fundamental frequency: $\omega$, and each harmonic winding will be excited at its harmonic of the fundamental, i.e., a third harmonic winding will be excited at the electrical frequency, $3\omega$. As will be discussed in more detail later herein, although the number of phases in the fundamental winding and in each harmonic winding must be two or more, the number of phases need not be the same for all windings.

This embodiment allows the greatest flexibility in choosing coil pitches and numbers of turns for the windings. This construction, however, requires that an armature slot be occupied by at least two different windings, thereby resulting in less efficient utilization of the slot area. Because of the less efficient utilization of the slot area by the multiple windings, this method typically results in less percentage improvement than do other methods as will be discussed later herein.

For two-phase systems, the displacement of the fundamental and third harmonic power supplies are 90 degrees. For three or more phase systems, displacements of the fundamental and the harmonic frequency supplies are 360/n electrical degrees for n number of phases.

Because the number of poles for the fundamental will automatically determine the required number of poles for the space harmonic windings, in a machine where separate windings are provided for the fundamental and for the harmonic excitation currents, the appropriate number of phases for the harmonic excitation is determined by the number of slots per pole available for the harmonic windings. Table 1 indicates the slot requirements of both fundamental and third harmonic windings for polyphase machines:

TABLE 1

| $PH_f$ | $S_{pf}$ | $S_{pPHf}$ | $PH_3$ | $S_{p3}$ | $S_{pPH3}$ |
|---|---|---|---|---|---|
| 2 | 6 | 3 | 2 | 2 | 1 |
| 3 | 6 | 2 | 2 | 2 | 1 |
| 6 | 6 | 1 | 2 | 2 | 1 |
| 3 | 9 | 3 | 3 | 3 | 1 |
| 9 | 9 | 1 | 3 | 3 | 1 |
| 2 | 12 | 6 | 2 | 4 | 2 |
| 3 | 12 | 4 | 4 | 4 | 1 |
| 4 | 12 | 3 | 4 | 4 | 1 |
| 6 | 12 | 2 | 4 | 4 | 1 |
| 12 | 12 | 1 | 4 | 4 | 1 |

where:

$PH_f$ indicates the number of phases of the fundamental frequency;

$S_{pf}$ indicates the slots per pole required for the fundamental winding;

$S_{pPHf}$ indicates the number of slots per pole per phase for the fundamental winding;

$PH_3$ indicates the number of phases of the third harmonic frequency;

$S_{p3}$ indicates the number of slots per pole required for the third harmonic winding; and

$S_{pPH3}$ indicates the number of slots per pole per phase for the third harmonic winding.

Those skilled in the art will recognize that in addition to the integral slot per pole per phase distributions indicated in Table 1, fractional slots per pole per phase may be utilized.

As indicated earlier herein, harmonic frequencies may be injected through use of a single winding for both fundamental and harmonic excitation. FIG. **5** schematically depicts in winding ring **37** a single layer winding for a four-pole, full pitch machine **36** having 36 slots. Machine **36** will preferably be excited by balanced nine-phase fundamental current. Accordingly, as determined by equation 1, machine **36** will have three-phase, twelve-pole third harmonic excitation. Fundamental windings are indicated by the pair of a letter and its prime, with a subscript indicating the slot position of the winding. For example, the winding between, A, in slot **1**, and A', in slot **10**, is designated as $A_1$–$A'_{10}$.

FIG. **6** depicts the power supply connections to the indicated windings of machine **36** of FIG. **5**. Transformer secondaries A–I, indicated as **30***a*, **30***b*, . . . **30***i*, are the secondaries of one or more transformers coupled to an appropriate nine-phase fundamental frequency power supply. Those skilled in the art will recognize that a balanced nine-phase fundamental frequency supply may be obtained from a three-phase fundamental frequency supply through use of an appropriate number of transformers; typically, three transformers, each with four appropriately wound secondaries. Third harmonic frequency sources x–z, are preferably the secondaries of transformers **32***x*, **32***y*, and **32***z*, each coupled to one phase of a three-phase third harmonic frequency power supply. Alternatively, however, the three-phase third harmonic frequency power supply may coupled directly to secondaries **30***a*–**30***i* in the manner indicated. In each arm of the star connection of FIG. **6**, a secondary of the three-phase third harmonic frequency power supply **32** is coupled between ground and a nine-phase fundamental frequency supply secondary **30**, and to a pair of fundamental windings. The fundamental windings are identified by the slot numbers of machine **36** as indicated in FIG. **5**. For example, as shown in FIG. **6**, three-phase secondary **32***x* is coupled in series between ground and nine-phase secondary **30***a*. The other side of nine-phase secondary **30***a* is then coupled to windings $A_1$–$A'_{10}$ and to $A_1$–$A'_{28}$. In machine **36** of FIGS. **5** and **6**, the winding pairs $A_1$–$A'_{10}$ and $A_{19}$–$A_{28}$ are connected in parallel between nine-phase secondary **30**A and ground. Alternatively, winding pairs $A_1$–$A'_{10}$ and $A_{19}$–$A'_{28}$ may be connected in series with one another between nine-phase secondary **30***a* and ground. Such series connection will approximately double the voltage required by machine **36** while halving the required current.

Ring **40** in FIG. **5** depicts the third harmonic phasers assigned to each slot of machine **36**. The effective third harmonic excitations shown, (i.e., $X_1$–$X'_4$, $X_7$–$X'_{10}$; etc.) do not represent actual windings, but rather the third harmonic phaser distributions achieved through application of power as depicted in FIG. **6** to the fundamental windings arranged as in FIG. **5**.

The present invention may also be employed with a multiple layer winding as opposed to the single layer winding utilized with machine **36** in FIGS. **5** and **6**. The winding connections for a machine **42** with a double layer winding are schematically depicted in FIG. **7**. Additionally, the principles of the present invention may be applied to a machine having less than a full pitch.

As indicated above, machine **36** of FIGS. **5** and **6** is a four-pole, thirty-six slot, full-pitch machine. A full-pitch machine is preferable for use with the present invention because an optimal increase in machine performance is realized through practice of the invention with a full pitch machine. However, those skilled in the art will realize that the fundamental excitation of some full pitch machines is more prone to generate undesirable fifth and seventh harmonics with such a phase relationship to the fundamental that machine performance is hindered, as discussed earlier herein. The coil pitch of a conventional machine is therefore often designed to be 0.83 so as to minimize these undesirable fifth and seventh space harmonics.

The fundamental coil pitch factor is determined by the relationship:

$$\cos[(\text{full pitch} - \text{actual pitch})/\text{full pitch} \times 180/2] \quad (2)$$

The third harmonic coil pitch factor for a single winding is determined by the relationship:

$$\cos[(\text{full pitch} - \text{actual pitch})/\text{full pitch} \times 3 \times 180/2] \quad (3)$$

Table 2 indicates the pitch factors for both the fundamental and the third harmonic for a double layer winding as determined through use of equations 2 and 3.

TABLE 2

| Actual pitch | Per-Unit Pitch | Fundamental Pitch Factor | 3rd Harmonic Pitch Factor |
|---|---|---|---|
| 9 slots | 1.00 | 1.00 | 1.00 |
| 8 slots | 0.89 | 0.98 | 0.87 |
| 7 slots | 0.78 | 0.94 | 0.50 |
| 6 slots | 0.67 | 0.87 | 0.00 |

FIG. **7** depicts a **36** slot machine **42** having a four-pole fundamental and a twelve-pole third harmonic, but with a 0.89 per unit pitch and a double layer winding. Windings are represented in FIG. **7** in the same manner as with FIG. **5**, i.e., windings are represented by pairs $A_1$–$A'_9$; $B_3$–$B'_{11}$, etc. Phase windings in adjacent pairs of slots, for example $A_1$–$A'_9$ and $A_2$–$A'_{10}$ are connected in parallel. Inner ring **43** does not represent actual windings of machine **42**, but rather the third harmonic phase distribution of machine **42**. Machine **42** may be excited by power connections similar to those depicted in FIG. **6** for machine **36**, with the addition of additional connections to the dual windings in each slot of machine **42**.

A third method of practicing the present invention involves the use of volt-amp balancers. This method allows the use of three-phase power supplies to provide the fundamental and third harmonic excitation. With this method the machine windings are delta-connected. Coupled to each delta is one phase of the three phase third harmonic excitation current. Each leg of each delta preferably contains the secondary of a transformer (**54***a*, **54***b*, **54***c*; **56***a*, **56***b*, **56***c*; **58***a*, **58***b*, **58***c* in FIG. **10**) each of which has a primary coupled to one phase of the third harmonic frequency power supply. As previously discussed, the frequency of the third harmonic excitation current will be three times that of the fundamental excitation current.

Autotransformers used in the volt-amp balancers of the power connections for this method will yield variations of resistance and leakage-reactance between full load on the machine and no load. However, for purposes of illustration of this embodiment, ideal conditions are assumed, in which the excitation current, the leak-

age reactances, and the resistances of both the volt-amp balancers and the third harmonic transformers are neglected. Under this assumption, the terminal voltage of a winding is equal to the back emf produced by the fundamental air-gap flux. These ideal conditions assumed are generally representative of a no load condition of a large rating machine, whose no load currents are typically small compared to their full load currents.

FIG. **8** depicts the connections and the back emf potential points ($A_1$, $A_2$, and $A_3$) for exciting a machine **45**, as depicted in FIG. **9**. Machine **45** is a four-pole, three-phase machine, having 36 slots and 120° phase belts. FIG. **10** schematically depicts the particular slot electrical connections for the connections depicted in FIG. **8**. Inner ring **47** of FIG. **9** depicts the third harmonic phaser distribution of machine **45** when machine **45** is excited through the connections as shown in FIGS. **8** and **10**.

With this volt-amp balancer method of harmonic injection, the number of phases of the third harmonic is determined by the number of slots per third harmonic pole by means of the relationship:

$$N_{ph3} = \textit{the smallest multiplier greater than 1 of } [n_s/(3 \times P_f)] \quad (4)$$

where:

$N_{ph3}$ equals the number of third harmonic phases;

$n_s$ equals the number of slots in the machine; and

$P_f$ equals the number of poles of the fundamental frequency.

In machine **45** coupled as depicted in FIGS. **8** and **10**, 120° phase belt slots **1**, **3** and **5**, etc. correspond to the three discrete phases of third harmonic excitation. Each phase of the three-phase third harmonic current is a zero-sequence current with respect to a particular fundamental delta winding. The back emfs: emf **1**, emf **2**, and emf **3**, of the fundamental frequency (in slots **1**, **3** and **5**, etc.) each have the same amplitude. Because the phases of these three currents are different, coils in slots **1**, **3** and **5**, etc. can not be directly connected, either in parallel or in series.

In the connections of FIG. **8**, three volt-amp balancers **49***a*, **49***b*, and **49***c* are used, one for each phase of the fundamental frequency current. Each volt-amp balancer is formed of two autotransformers: **T1**, indicated as **50***a*, **50***b* and **50***c*, and **T2**, indicated as **52***a*, **52***b* and **52***c*. The turn ratio of transformers **T1** (**50***a*, **50***b* and **50***c*), is 1:1. The turn ratio of each transformer **T2** (**52***a*, **52***b* and **52***c*), is 2:1. The sides of each transformer **T1** will be connected to a terminal potential point **A1** or **A3** of first delta **44** or third delta **48**, respectively. Autotransformer **T2** will be connected between terminal potential point **A2** of second delta **46** and the center tap **53** of its respective transformer **T1**. Line current of phase A is coupled to the tap **54***a*, of autotransformer **T2**, **52***a*. Because the turn ratio of autotransformer **T2** is 2:1 relative to tap **54***a*, the line current of phase A will convey one portion to terminal **A2** of second delta **46** and two portions into center tap **53***a* of transformer **T1**, **50***a*. Similarly, because the turn ratio of each autotransformer (**T1**) **50***a*, **50***b* and **50***c* is 1:1, the current into the terminal potential point **A3** of third delta **48** is the same as that going into the terminal potential point **A1** of first delta **44**. Accordingly, the line currents entering terminal potential points **A1**, **A2** and **A3** of first, second and third deltas **44**, **46**, and **48**, respectively are identical. As a result, the phase current drive will be identical for each phase.

In operation of the embodiment depicted in FIGS. **8–10**, the back emfs at terminal points **A1** and **A3** are balanced by transformers (**T1**) **50***a*, **50***b* and **50***c*. The potential at terminal potential point **A2** and at the center tap of autotransformer **T1** are balanced by each autotransformer **T2**, **52***a*, **52***b* and **52***c*. As indicated above, each third harmonic current appears as a zero-sequence current relative to a particular fundamental current. Accordingly, the volt-amp balancers see only the fundamental frequency currents and voltages. The back emf voltages are therefore maintained in the same amplitudes, but in different phases, through operation of volt-amp balancers **49***a*, **49***b*, **49***c*. The net effect of this connection is that the flux wave produced is the same as that which would be produced with the coils of slots **1**, **3** and **5** connected in series.

The fundamental frequency back emf voltage difference between the harmonic phases found in alternate slots, slots **1**, **3** and **5**, etc., are related as shown in the vector diagram of FIG. **11**. As can be seen in FIG. **11**, the back emfs in each delta **44**, **46**, **48** are of equal magnitude, but have a phase angle difference of 40°. The volt-amp balancers balance these phase differences, which occur between alternate slots in machine **45**. As one skilled in the art can calculate, the total volt-ampere rating of volt-amp balancers **49***a*, **49***b* and **49***c*, is 0.37 that of the transformers required to provide the nine-phase fundamental frequency supply discussed in relation to the system of FIGS. **5** and **6**. The results actually achieved with a machine excited through use of volt-amp balancers will depart somewhat from the ideal performance shown and described. This departure will be due in large part to winding resistance and leakage reactance in the volt-amp balancers and harmonic frequency transformers. Accordingly, in the design of components for any particular system, the transformers for the volt-amp balancers and third harmonic excitation should be designed with sufficiently low winding resistance and leakage reactance to minimize departure from the ideal.

FIG. **12** depicts another embodiment of this method of harmonic injection into a four-pole, thirty-six slot machine **60**, with windings corresponding to a 60° phase belt connection. The actual connection diagram for machine **60** is depicted in FIG. **13**. As can be seen in FIG. **13**, the polarity of each third harmonic transformer **61***a*, **61***b*, **61***c* coupled to the delta in slot **2** is reversed relative to the polarity of third harmonic transformers **63***a*, **63***b*, **63***c*; **65***a*, **65***b*, **65***c*, coupled to the deltas in slots **1** and **3**. The volt-ampere rating of the three volt-amp balancers **62***a*, **62***b* and **62***c* of FIG. **13** is 0.18 that of the transformers required to provide the nine-phase supply discussed in reference to the system of FIGS. **5** and **6**. The volt-ampere rating of the balancers is therefore substantially less even than that of the system of FIGS. **8–10** having 120° phase belt connections.

Another example of the present invention can be illustrated through use of an ideal machine having two third harmonic phases. FIG. **14** schematically depicts a three-phase full-pitch, double layer winding six-pole fundamental, 36 slot machine **66**. Referring to the number of slots per third harmonic pole is: $36/(3 \times 6) = 2$. Referring to equation 4, because 2 is the smallest multiplier of 2 other than 1, the number of phases of the third

harmonic excitation is 2. Ring 67 depicts the third harmonic phase distribution for machine 66.

Referring now also to FIGS. 15 and 16, the windings of machine 66 are connected in two deltas 69, 71. FIG. 15 depicts the winding fundamental frequency back emf potential points (A1 and A2), corresponding to the connection of the volt-amp balancers 68a, 68b and 68c of FIG. 17. In the machine of FIGS. 14–16, the total volt-amp rating of the three volt-amp balancers is 0.26 that of the transformers which would be needed to supply the fundamental frequency excitation through use of a three-phase fundamental frequency supply as discussed in reference to FIGS. 5 and 6. One phase of the third harmonic excitation will be applied to each leg of a delta through transformers as depicted at 70 and 72 in FIG. 16.

Because the third harmonic excitation of machine 66 is two phase, one autotransformer is used for each volt-amp balancer 68a, 68b, 68c. FIG. 16 schematically depicts a detailed connection diagram for exciting machine 66. Each third harmonic frequency supply transformer, 70 and 72, supplies one of the two phases of the third harmonic excitation current. Each transformer 70 and 72 preferably includes a single primary and three equivalent secondaries, coupled in the deltas as shown. As is well known in the art, because each secondary carries one phase of the fundamental frequency current, the mmfs of these fundamental frequency currents add to zero, and no fundamental frequency current is induced in the primary of the third harmonic transformers. This is true of all third harmonic transformers in all other embodiments described herein.

A fourth method of injection of third harmonic frequencies utilizes a single stator winding in conjunction with a multiphase inverter. Referring now to FIG. 17, therein is schematically depicted a machine 74 having six fundamental poles in thirty-six slots. The windings of machine 74 will be connected in two deltas, 78 and 80, displaced 30 electrical degrees from one another, each to be excited by a three-phase fundamental frequency supply. Windings indicated by letters enclosed in circles in FIG. 17 represent windings of the second delta as opposed to windings represented by the unencircled letters. For example winding pair $A_1$–$A'_7$ is connected in delta 78, while winding $A_2$–$A'_8$ is connected in delta 80. Ring 75 depicts the distribution of the third harmonic phases in machine 74.

FIG. 18 schematically depicts machine 74 and a multiphase inverter power supply 76 suitable for use therewith. In the method of this embodiment, neither the multiphase power transformers utilized with the apparatus of FIGS. 5 and 6, nor the volt-amp balancers of the various apparatus of FIGS. 7–16 are required. Multiphase inverter 76 provides two three-phase fundamental frequencies 82, 84 each displaced 30° from one another. The first fundamental frequency outputs 82 are coupled to first delta 78, while second fundamental frequency outputs 84 are coupled to second delta 80.

The third harmonic excitation is two phase. Each phase is injected into one of the fundamental delta windings 78, 80. Each leg of each delta, 78, 80, will include the secondary 86a, 86b, 86c; 88a, 88b, 88c, respectively, of a transformer having its primary coupled to a third harmonic frequency supply. Because this multiphase inverter method of the present invention is particularly suitable for use with adjustable frequency drives, it will be advantageous to generate the third harmonic frequency directly in response to the fundamental frequency. This may be done through conventional means. For example, the rectified power 90 may be applied to a third harmonic frequency generator 92 outputting two phases 94, 96. Third harmonic frequency generator 92 will preferably be responsive to one phase of a fundamental frequency output 98 to enable precise frequency and phase control of third harmonic frequency phases 94 and 96. Third harmonic frequency phases 94 and 96 will be coupled to primaries 86', 88' of transformer secondaries 86a, 86b, 86c; and 88a, 88b, 88c, respectively.

Each of the above-discussed methods and apparatus allows the optimizing of flux distribution in a polyphase AC machine. As discussed in reference to FIGS. 1–3, the optimal phase relationship will be selected between the harmonic excitation current and the fundamental excitation current to facilitate optimal distribution of the flux density and optional increases in the total flux per pole of the machine.

Many modifications and variations may be made in the techniques and structures described and illustrated herein without departing from the spirit and the scope of the present invention. Accordingly, it is to be readily understood that the embodiments described and illustrated herein are illustrative only and are not to be considered as limitations for the present invention.

We claim:

1. A method of exciting a polyphase alternating current machine having a set of windings formed therein wherein at least a first portion of said winding have a preselected number of poles associated therewith, and at least a second portion of said windings have an odd multiple preselected number of poles associated therewith, comprising the steps of:

exciting at least said first portion of the windings of said machine with a polyphase fundamental frequency current so that a fundamental flux wave rotates in an air gap of said machine at a speed corresponding to the frequency of said fundamental frequency current; and

exciting at least said second portion of the windings of said machine with an odd harmonic frequency of said fundamental frequency current so that a harmonic flux wave rotates in the air gap of said machine at a speed substantially synchronous with said fundamental flux wave.

2. The method of claim 1, wherein said machine is excited by a fundamental frequency current by applying said fundamental frequency current to a first set of windings, and wherein said machine is excited with an odd harmonic frequency current by applying said odd harmonic frequency current to a second set of windings.

3. The method of claim 1, wherein said fundamental frequency current and said harmonic frequency current are applied to single set of windings.

4. The method of claim 3, wherein the windings in said single set of windings are connected in a plurality of deltas.

5. The method of claim 4, wherein said deltas are current balanced relative to one another.

6. The method of claim 4, wherein said deltas are coupled to one another through transformers.

7. The method of claim 6, wherein one phase of said odd harmonic frequency current is applied to each leg of one of said deltas.

8. A method of operating an alternating current machine having a set of windings formed therein wherein at least a first portion of said windings have a prese-

lected number of poles associated therewith, and at least a second portion of said windings have an odd multiple preselected number of poles associated therewith, comprising the steps of:

generating a fundamental flow wave in an air gap of said machine by exciting at least said first portion of said windings with a fundamental frequency current; and

generating an odd harmonic flux wave in said air gap of said machine by exciting at least said second portion of said windings with an odd harmonic frequency current of said fundamental frequency current, said harmonic flux wave moving in said air gap in synchronous relation to said fundamental flux wave.

**9.** A polyphase alternating current machine having at least one set of windings formed therein where at least a first portion of said windings have a preselected number of poles associated therewith, and at least a second portion of said windings have an odd multiple preselected number of poles associated therewith, comprising:

means for exciting at least said first portion of said windings with a polyphase fundamental frequency current to generate a fundamental flux wave rotating in an air gap of said machine; and

means for exciting at least said second portion of said windings with an odd harmonic frequency current of said fundamental frequency current to generate a harmonic flux wave rotating in the air gap of said machine in synchronous relation with said fundamental flux wave.

**10.** The method of claim **9**, wherein said machine comprises a first set of windings adapted for being excited by said fundamental frequency current and a second set of windings adapted for being excited by said odd harmonic frequency current.

**11.** An alternating current machine having a set of windings formed therein wherein at least a first portion of said windings have a preselected number of poles associated therewith, and at least a second portion of said windings have an odd multiple preselected number of poles associated therewith, comprising:

means for generating a fundamental flux wave in an air gap of said machine by exciting said first portion of said windings with a fundamental frequency current; and

means for generating a harmonic flux wave in said air gap of said machine by exciting said second portion of said windings with an odd harmonic frequency current of said fundamental frequency current, said harmonic flux wave moving in said air gap in synchronous relation to said fundamental flux wave.

**12.** A method for exciting a polyphase alternating current machine to controllably produce a flux wave of a preselected configuration in an air gap of said machine, said machine having a set of windings formed therein wherein at least a first portion of said windings have a preselected number of poles associated therewith, and at least a second portion of said windings have an odd multiple preselected number of poles associated therewith, comprising the steps of:

exciting at least said first portion of said windings with a polyphase fundamental frequency current so that a fundamental flux wave rotates in the air gap of said machine at a speed corresponding to the frequency of said fundamental current;

exciting at least said second portion of said windings with an odd harmonic frequency of said fundamental frequency current, said odd harmonic frequency excitation being approximately in phase with said fundamental frequency current so that an odd harmonic flux wave rotates in the air gap of said machine at a speed substantially identical to the frequency of said fundamental flux wave; and

combining said fundamental and harmonic waves to produce a resultant flux wave having a peak amplitude less than the amplitude of the fundamental flux wave.

**13.** A method, as set forth in claim **12**, wherein said step of exciting said machine with a polyphase fundamental frequency current includes applying said fundamental frequency current to a first set of windings, and wherein said step of exciting said machine with an odd harmonic frequency includes applying said odd harmonic frequency current to a second set of windings.

**14.** A method, as set forth in claim **12**, wherein the steps of exciting said machine with the polyphase fundamental frequency current and the odd harmonic frequency current includes applying said fundamental frequency current and said odd harmonic frequency current to a single set of windings.

**15.** A method for exciting a polyphase alternating current machine to controllably produce a flux wave of a preselected configuration in an air gap of said machine, said machine having a set of windings formed therein wherein at least a first portion of said windings have a preselected number of poles associated therewith, and at least a second portion of said windings have an odd multiple preselected number of poles associated therewith, comprising the steps of:

generating a fundamental flux wave rotating in the air gap of said machine at a first preselected speed by exciting at least said first portion of said windings with a polyphase fundamental frequency current;

generating an odd harmonic flux wave rotating in the air gap of said machine at said first preselected speed substantially in phase with said fundamental flux wave by exciting at least said second portion of said windings with an odd harmonic frequency current of said fundamental frequency current; and

combining said fundamental and odd harmonic flux waves to produce a resultant flux wave having a peak amplitude less than the amplitude of the fundamental flux wave.

**16.** A method for exciting a polyphase alternating current machine to controllably produce a flux wave of a preselected configuration in an air gap of said machine having a set of windings formed therein wherein at least a first portion of said windings have a preselected number of poles associated therewith, and at least a second portion of said windings have an odd multiple preselected number of poles associated therewith, comprising the steps of:

generating a fundamental flux wave rotating in the air gap of said machine at a first preselected speed by exciting at least said first portion of said windings with a polyphase fundamental frequency current;

generating an odd harmonic flux wave rotating in the air gap of said machine at substantially the same speed as said first preselected speed by exciting at least said second portion of said windings with an odd harmonic frequency current of said fundamental frequency current; and

adjusting the phase relationship of said harmonic flux wave relative to said fundamental flux wave to produce a resultant flux wave having a peak amplitude less than the amplitude of the fundamental flux wave.

**17**. An apparatus for exciting a polyphase alternating current machine having at least one set of stator windings to controllably produce a flux wave of a preselected configuration in an air gap of said machine, at least a first portion of said windings having preselected number of poles associated therewith, and at least a second portion of said windings having an odd multiple preselected number of poles associated therewith, comprising:

means for exciting at least the first portion of said windings with a polyphase fundamental frequency current and generating a resultant fundamental flux wave rotating in the air gap of said machine at a first preselected speed;

means for exciting at least the second portion of said windings with an odd harmonic frequency current of said fundamental frequency current and generating a resultant odd harmonic flux wave rotating in the air gap of said machine at said first preselected speed; and

means for adjusting the phase relationship of said harmonic flux wave relative to said fundamental flux wave to produce a resultant flux wave having a peak amplitude less than the amplitude of the fundamental flux wave.

**18**. An apparatus for exciting a polyphase alternating current machine to controllably produce a flux wave of a preselected configuration in an air gap of said machine, having a set of windings formed therein wherein at least a first portion of said windings have a preselected number of poles associated therewith, and at least a second portion of said windings have no odd multiple preselected number of poles associated therewith, comprising:

means for exciting at least said first portion of said windings with a polyphase fundamental frequency current so that a fundamental flux wave rotates in the air gap of said machine at a speed corresponding to the frequency of said fundamental current;

means for exciting at least said second portion of said windings with an odd harmonic frequency of said fundamental frequency current, said odd harmonic frequency excitation being substantially in phase with said fundamental frequency current so that an odd harmonic flux wave rotates in the air gap of said machine at a speed corresponding to the frequency of said fundamental current, said fundamental and harmonic flux waves combining to produce an air gap resultant flux wave having a peak amplitude less than the amplitude of the fundamental flux wave.

**19**. An apparatus for exciting a polyphase alternating current machine having at least one set of stator windings to controllably produce a flux wave of a preselected configuration in selected portions of said machine, at least a first portion of said windings having preselected number of poles associated therewith, and at least a second portion of said windings having an odd multiple preselected number of poles associated therewith, comprising:

a sinusoidal fundamental frequency current source connected to at least said first portion of said stator windings and adapted for exciting the windings of said machine to produce a fundamental flux wave rotating about an air gap in said machine at a speed corresponding to the frequency of said fundamental frequency;

a sinusoidal odd harmonic frequency current source connected to at least said second portion of said stator windings and adapted for exciting the windings of said machine to produce an odd harmonic flux wave rotating about the air gap of said machine at a speed substantially synchronous with said fundamental flux wave; and

means for adjusting the phase relation of said odd harmonic current relative to said fundamental frequency current to produce a resultant flux wave having a substantially rectangular configuration.

* * * * *

UNITED STATES PATENT AND TRADEMARK OFFICE

# CERTIFICATE OF CORRECTION

PATENT NO. : 5,189,357

DATED : February 23, 1993

INVENTOR(S) : Herbert H. Woodson, et al.

It is certified that error appears in the above-identified patent and that said Letters Patent is hereby corrected as shown below:

Column 15, line 5, delete "flow" and insert -- flux --.

Column 15, line 17, "where" should be -- wherein --.

Column 16, line 9, before "waves", insert -- flux --.

Column 17, line 37, delete "no" and substitute -- an --.

Signed and Sealed this

Fourteenth Day of December, 1993

*Attest:*

BRUCE LEHMAN

*Attesting Officer*

*Commissioner of Patents and Trademarks*