2009

# Solar And Fuel Cell Circuit Modeling, Analysis And Integrations With Power Conversion Circuits For Distributed Generation

Smitha Krishnamurthy
*University of Central Florida*

# SOLAR AND FUEL CELL CIRCUIT MODELING, ANALYSIS AND INTEGRATIONS WITH POWER CONVERSION CIRCUITS FOR DISTRIBUTED GENERATION

by

SMITHA KRISHNAMURTHY
B.S. Visvesvaraya Technological University, 2006

A thesis submitted in partial fulfillment of the requirements
for the degree of Master of Science in Electrical Engineering
in the School of Electrical Engineering and Computer Science
in the College of Engineering and Computer Science
at the University of Central Florida
Orlando, Florida

Summer Term
2009

# ABSTRACT

Renewable energy is considered to be one of the most promising alternatives for the growing energy demand in response to depletion of fossil fuels and undesired global warming issue. With such perspective, Solar Cells and Fuel Cells are most viable, environmentally sound, and sustainable energy sources for power generation. Solar and Fuel cells have created great interests in modern applications including distributed energy generation to provide clean energy.

The purpose of this thesis was to perform a detailed analysis and modeling of Solar and Fuel cells using Cadence SPICE, and to investigate dynamic interactions between the modules and power conversion circuits. Equivalent electronic static and dynamic models for Solar and Fuel Cells, their electrical characteristics, and typical power loss mechanisms associated with them are demonstrated with simulation results. Power conversion circuits for integration with the dynamic models of these renewable low voltage sources are specifically chosen to boost and regulate the input low dc voltage from the modules. The scope of this work was to analyze and model solar and fuel cells to study their terminal characteristics, power loss mechanisms, modules and their dynamics when interfaced with power converters, which would lead to better understanding of these renewable sources in power applications.

***Dedicated to my parents***

# ACKNOWLEDGMENTS

Attaining goals and reaching the peak is always made easier with the support of family and friends. I whole heartedly thank all those individuals who offered their assistance in coming up with the vision, ideas, methods and results contained in this thesis. I also thank them for their continuous support throughout my graduate studies.

I wish to extend my gratitude to my thesis chair, Dr. Jiann Shiun Yuan, for his insight, understanding and time he provided me throughout the development of this thesis. He has always been more than a mentor to me, by guiding me through my difficult times. His incomparable support, resilience and the vision of future have influenced me in finding the path to realize my dreams.

I would like to extend my deepest gratitude to Dr. Issa Batarseh, who gave me an opportunity to work with him in the field of power electronics. I would also like to thank Dr. Kalpathy Sundaram, whose guidance helped me gain great knowledge in the field of microelectronics.

Last in the list, but first in my heart, I owe my thanks to my husband, Sunil Setty and my parents, Krishnamurthy. H. L and Mrs. Radha and my sister Mrs. Sushma who ceaselessly and tirelessly encouraged me throughout my life. I am deeply grateful to them for their constant emotional support, and for giving me the courage to follow my dreams.

# TABLE OF CONTENTS

# LIST OF FIGURES

# LIST OF TABLES

# LIST OF ABBREVIATIONS

| | |
|---|---|
| PV | Photovoltaic |
| FC | Fuel Cell |
| I-V Curve | Current -Voltage Curve |
| P-V Curve | Power -Voltage Curve |
| V-I Curve | Voltage - Current Curve |
| P-I Curve | Power - Current Curve |
| PEM | Proton Exchange Membrane |
| DSSC | Dye-sensitized solar cells |
| MPPT | Maximum Power Point Tracking |
| UC | Ultra capacitor |

# CHAPTER 1 INTRODUCTION

## 1.1 Introduction

An increase in worldwide energy consumption and, economic and environmental concerns has increased interest and demand for alternative energy conversion technologies. Renewable energy sources would be the most viable alternative energy resource for growing energy demand in response to depletion of fossil fuels and global warming effect caused by excessive combustion of fossil fuels. With such perspective, Solar Cells and Fuel Cells are viable, environmental sound, sustainable energy sources for power generation. These sources have great potential for several modern applications including distributed energy generation to provide as a clean energy resource. However, since they generate low amplitude and load dependent varying dc voltage and are associated with other inherent obstacles like low efficiency, sluggish response to sudden change in load current, poor cell utilization; power conditioners are necessary to be incorporated in the system to boost and regulate the input low dc voltage and to convert the dc voltage into desired ac signal for distributed applications [9]. Additionally power conditioners also improve, performance, power quality of the system, and utilization of renewable energy source modules [9]. Designing renewable power conversion systems normally depends on the requirement, cost, and reliability demands of a particular application. Obviously, a better renewable power conversion system comes with complex designs and thus costly systems. Much different architecture has been proposed for renewable power conversion systems. Two-stage or multi-stage power conversion topologies are popular in distributed generation. Multi-stage power conditioning systems as seen in Figure.1.1 with non-isolated dc-dc converters often requires

low-frequency transformers to be included with the inverters and thus carry large inductors resulting in bulky circuits. Whereas, power conditioning systems, incorporating isolated dc-dc converters as seen in Figure.1.2 consists high-frequency transformers with relatively smaller inductance and thus resulting in reduced converter size and cost. Isolated dc-dc converters also provide safety for the modules by separating low voltage side and high voltage side.

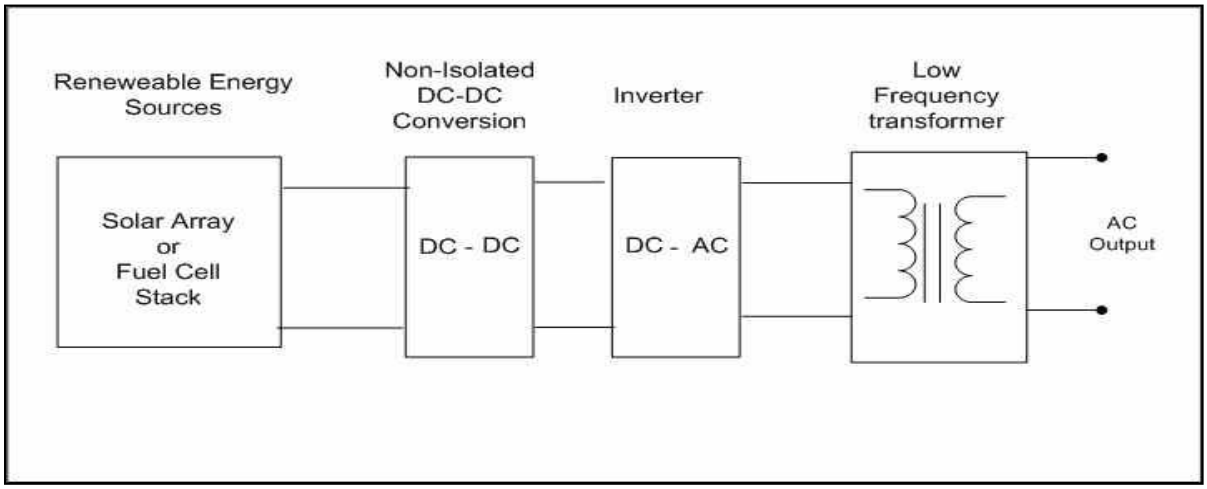


Figure 1.1: Multi-stage power conditioning system with non isolated dc-dc converter as first stage with low frequency transformer at the inverter output.

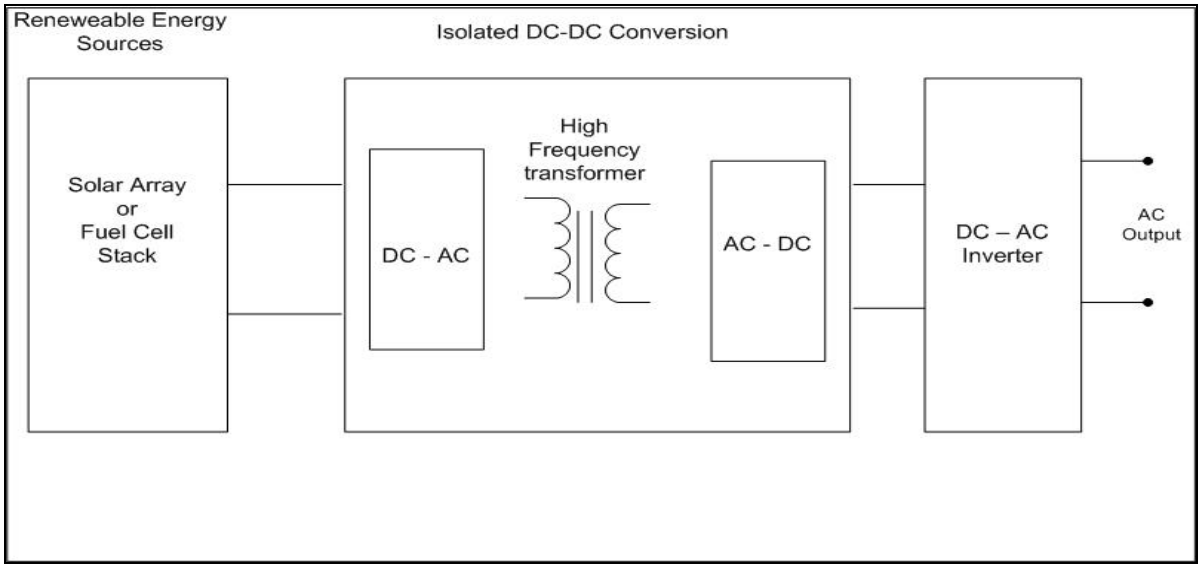


Figure 1.2: Multi-stage power conditioning system with isolated dc-dc converter as first stage with high frequency transformer associated with dc-dc converter

In this study, static and dynamic modeling of equivalent electrical model of one diode solar cell and proton exchange membrane (PEM) fuel cell is performed to demonstrate their electrical characteristics and associated power loss factors. The models are used to analyze their sensitivity to circuit elements and temperature. The equivalent models of both Solar and Fuel cells are stacked in series and parallel architectures to generate Solar and Fuel Cell modules to obtain desired amount of output power suitable to input to power conditioners. Adopted Solar array based power conditioning circuits consists of a boost derived full-bridge dc-dc converter with diode bridge rectifier circuit to provide a stable high side dc voltage. Adopted Fuel cell based power conditioning circuits include, a wide input range dc-dc converter developed in [5] which is compatible with slow transient response of fuel cell, constitute two boosting stages to maintain a stable output dc voltage. A three wire PWM inverter with single and three phase circuits are investigated to obtain ac output for renewable energy systems. Solar and fuel modules and power

converters developed in the study are interfaced to analyze some of the dynamic responses of the system.

A More complete renewable power system not only includes renewable source modules, power converters and load, but contains several other circuits like feedback control, MPPT circuits, auxiliary storage batteries, etc. A typical solar or fuel cell system for distributive applications is as shown in Figure 1.3. However, the scope of this part of study remains with modeling and analysis of solar and fuel cells and their dynamic interactions with power conversions.

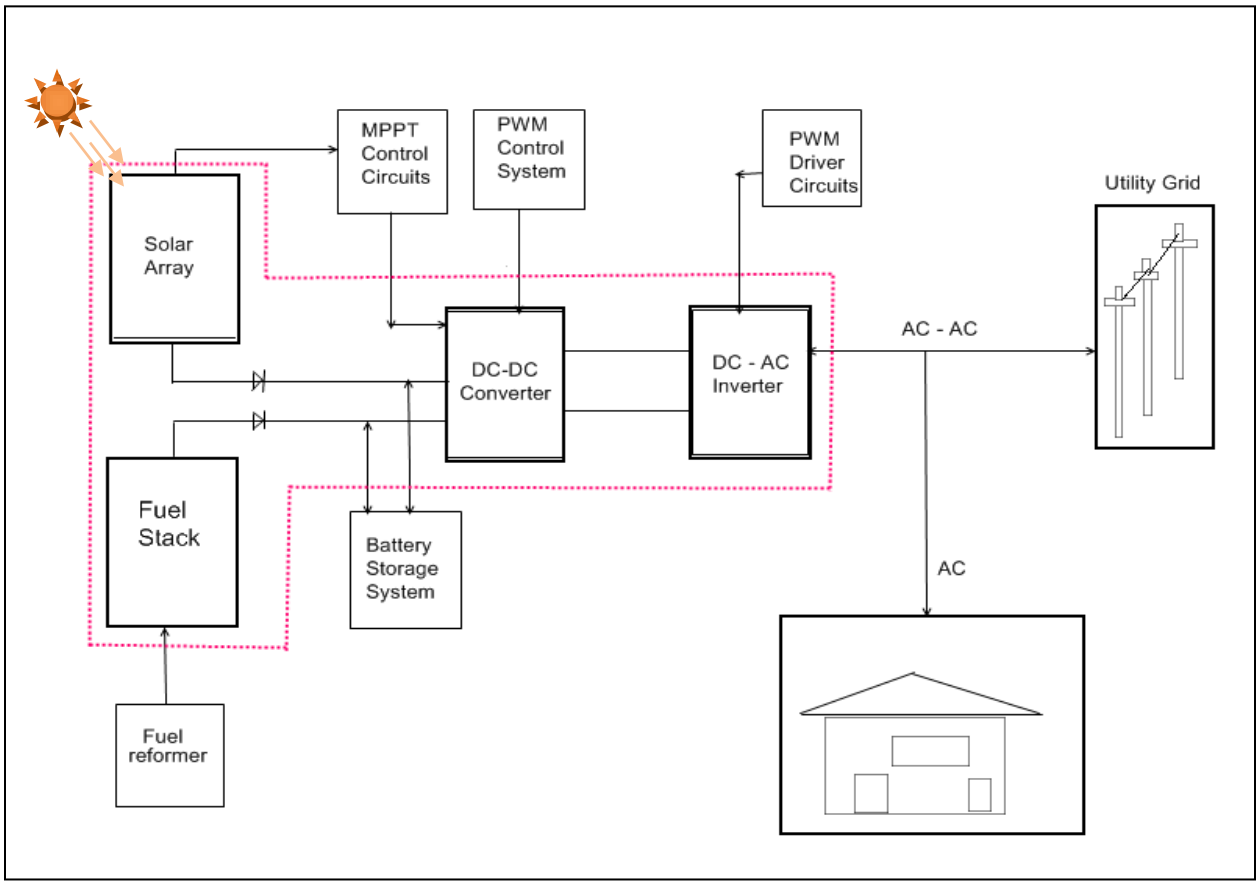


Figure 1.3: Typical Solar and Fuel cell systems in distributed generation

## 1.2 Objective

The objective of this thesis was to perform a systematic analysis and modeling of Solar Cells, Fuel Cells and power conversion circuits. Analysis of the models and power converters include,

- Modeling equivalent electrical solar and fuel cell circuits to analyze their electrical characteristics, sensitivity to change in temperature and circuit elements, demonstrating the power losses from the models.
- Modeling appropriate dc-dc and dc-ac power converters for Solar and Fuel Cells depending on their module behavior and needs.
- Integrating the modules studied, with dc-dc converters to analyze impact of interface on their terminal characteristics, system dynamic response, and effectiveness of the system design.

## 1.3 Motivation

Renewable energy sources like Solar and Fuel Cells have always been due to their clean energy production, the most promising but challenging and thus interesting technologies for power generation. In recent years, a lot of research studies in renewable sources like solar cells, fuel cells and wind energy are being done to improve their efficiency, performance, materials and at the same time to reduce their cost for implementation. Also lately, many research works report solar cells and fuel cells with higher efficiency and reliability. These improvements in renewable energy sources in turn put new challenges to designing power electronics incorporated with the renewable sources. The main motivation in pursuing this research study was that, renewable

energy sources are the key enabling technologies for future power generation and there is a need to explore and understand the behavior and physics behind these green energy sources, power conditioners incorporated with them and their interactions; to develop a better understanding about the technologies which would help to designing and implementation of more efficient, cost-effective and reliable renewable energy systems for future power generation.

## 1.4 Structure Of The Thesis

Chapter 2 discusses brief history, background, importance, impact, application areas, and issues of Solar and Fuel Cells. Also, in chapter 2, working principle, classification of Solar cells and Fuel cells and need for power converters are discussed. Chapter 3 presents, static and dynamic equivalent circuit modeling of Solar cells and Fuel cells in cadence SPICE, with simulation results for their polarization curves, sensitivity analysis demonstrating power losses in the terminal characteristics due to variation in temperature and circuit elements and equivalent solar and fuel cell module designs. Chapter 4 discusses power converter designs adopted for system application and their design features. Chapter 5 discusses results of some dynamic interactions between the renewable modules presented in chapters 3 and power converters presented in chapters 4 with concluding remarks and direction of future work of this study.

# CHAPTER 2 BACKGROUND

## 2.1 Overview

### *2.1.1 Brief History of Solar Cells*

Solar technology is not new. Its history spans from 7$^{th}$ century B.C. to taday. The Sun's energy was utilized in ancient times with instruments like glasses and mirros to light fire, light torches, etc. Today, Sun's energy is being harnessed for several applications including automotives, buildings, utilities, space sattilites etc. Some of the milestones of development of solar technology are discussed here. In 1839, a french scientist Edmond Becquerel reported the photovoltaic effect, when he observed, generation of electric current increased when an electrolytic cell made up of two electrodes immersed in an electrolyte was exposed to sunlight. Based on the discovery of photoconductivity of Selenium, in 1876, William Adams and Richard Evans proved that a solid material could change light into electricity without any external power supply, heat or moving parts. In 1883, Charles Fritts developed what was probable first solar cell from selenium pressed between metal. Photovoltaic effect was soon observed in other materials like copper-oxide, cadmium sulphide, lead sulphide, thallium sulphide. Studies of these materials as early solar cells noted the existance of a barrier layer needed for the photovoltaic effect. Although selenium and other materials carried photoconductive property, they failed to convert enough sunlight into electrical power. It was not until the development of good quality single crystal silicon in 1920s, photovoltaic devices with good power were developed. In 1954, Daryl Chapin, Calvin Fuller and Gerald Pearson developed first silicon solar cell at Bell laboratory capable of converting enough sun's energy into power to run everyday electrical equipments.

Though there were improvements in the efficiencies of solar cells, their production cost made them not considerable for domestic use. However, due to their low weight and reliability; during the 1950's and 1960's silicon solar cells were widely developed for space applications. Also , in 1950's other materials like cadmium sulphide, gallium arsenide, cadmium teluride and indium phosphide which could provide higher efficiencies were introduced. The oil crisis in 1970's, led to greater interests in alternative sources of energy. Photovolatics were extensively studied during the time, mainly in focus to overcome their two major drawbacks, high cost and low efficiencies. To reduce cost, new approaches included photoelectrochemical junctions and alternative materials such as polycrystalline silicon, amorphous silicon, thin-film materials and organic conductors and strategies for higher efficiencies included tandem and other multiple band-gap materials. Widespread interests, research ,development on photovoltaics increased beginning 21$^{st}$ century, leading to an increase in production of photovoltaics at the rate of about 15% per year and has remained.

### *2.1.2 Brief History of Fuel Cells*

History of fuel cell dates more than 150 years. In 1800, the process of using electricity to split water into hydrogen and oxygen called 'Electrolysis' was discovered by british scientists William Nicholson and Anthony Carlisle. Using this principle of electrolysis, in 1839 Willium Robert Grove believed that reverse of the electrolysis process, that is generating electricity by reacting oxygen and hydrogen should be possible. He tested the theory by, placing each ends of two platinum electrodes in separate sealed containers, one containing hydrogen and the other

containing oxygen. While the other ends of electrodes immersed in sulphuric acid, a constant current would flow between the electrodes and water was formed as bi-product. Grove connected several of these electrodes in series to increase the voltage generated and created what he called as a ‘gas battery’. Ludwig Mond and Carl Langer, in 1889, further improved Grove’s work and demonstrated a gas-powered battery with better performance which they called ‘fuel cell’.Grove had speculated that the action in his gas battery was at the point of contact of electrode, gas and electrolyte, but he did not explaine the process further [12]. Friedrich Wilhelm Ostwald, in 1893 explored the chemistry behind the gas-battery and experimentally determined the interactions between the various components: electrodes, electrolyte, oxidizer, anions and cations to provide an understanding of fuel cells. . It was not until 1939, an engineer, Dr. Fransis Thomas Bacon developed a device what is known as the first alkaline fuel cell. It was called ‘Bacon Cell’ ,which had nickel gauze electrodes and alkali potassium hydroxide electrolyte. Almost 3 decades later, after the development of ‘Bacon Cell’, Bacon demonstrated a 5 Kwatt power stationary fuel cell capable of powering a welding machine. In 1959, Allis-Chalmers, a farm equipment manufacturer, demostrated the first fuel cell powered 20 horse power tractor which constituted a stack of 1008 fuel cells and generated 15Kwatt power. NASA was greatly stimulated by the advancement in the technology and space shuttle flights like Gemini series and Apollo relied on fuel cells for on-board electric power and utilized water produced as the bi-product for drinking on the flight. With these successful breakthrough in fuel cell technology, a number of companies and government organizations began intense research in the field. Currently, many applications in automotives, spacecrafts, utilities are being developed.

## 2.2 Need For Renewable Energy Sources

Since the industrial revolution, fossil fuels like petroleum, coal, oil, natural gas and other non-renewable energy sources have been used as the primary energy source of power for commercial and domestic applications. However, fossil fuels are finite source of energy and with rapidly increasing energy consumption with population and concerns of excessive use and depletion of these sources of energy, have alarmed the need for sustainable and renewable energy. Burning fossil fuels, releases number of particulate matter like carbon, nitrogen and sulphur into the atmosphere which combines with air to form acidic components causing acid rain, affecting natural and human resource. Also, combustion of fossil fuels and other human activities have increased greenhouse gases like carbon-dioxide, methane, chloroflourocarbon's in the atmosphere which are believed as the major factor for the cause of global warming. In addition to these effects, there are environmental risks associated with extracting, transporting and utilizing fossil fuels which can bring hazardous impact on surrounding habitat and environment. Continuing consumption of fossil fuels might also have affect economically by generating a shortfall of these energy resources with the growing demand. Thus there is a need for conservation of fossil fuels to protect our environment by utilizing a sustainable, renewable, and clean energy resources.

## 2.3 Advantages, Disadvantages and Applications of Renewable Energy Sources

### *2.3.1 Advantages and disadvantages of Solar Cells*

Advantages of Solar cell technology can be mostly viewed by their comparison with the drawbacks of the present day primary energy sources, fossil fuels. Table 1 describes some of the advantages and disadvantages of solar cells.

**Table 1: Advantages and disadvantages of solar cells**

**Advantages:**

- Abundant source of energy: Unlike fossil fuels, like natural gas, petroleum, coil, oil etc which are associated with expensive and hazardous processes like drilling and mining for their extraction , Solar energy is abundant, free and readily available source of energy.
- No harnmful emissions: Solar cells are clean sources of energy with no harmful emissions of greenhouse gases.
- Reliable and low maintainace: Solar cells do not have any moving parts and are free from vibrations. Therefore, require minimal maintainance over their lifetime and last longer.
- Sustainable energy source: Solar is renewable and sustainable source of energy.
- Allows Distributed Power Generation: Photovoltaic power generation do not require a large scale installation to operate unlike conventional power generation stations. Solar power generators can be installed in a distributed fashion, on the user end utilizing area that is already present, and allowing individual users to generate their own power.

**Disadvantages:**

- Initial installation cost of a solar system is expensive.
- Solar cells are less efficient.
- Energy from the sun is not constant. Solar energy cannot be harnessed during cloudy days, rains and at night. This limits the energy production from the solar cells and thus to a certain extent making it necessary to rely on fossil fuels for power demands.
- Since the solar energy availability is limited and varying, they need storage through batteries, for use during night time and cloudy days.

### *2.3.2 Advantages and disadvantages of Fuel Cells*

Several salient features associated with fuel cells unlike in conventional energy sources include.

Table 2 describes some of the advantages and disadvantages of fuel cells.

**Table 2: Advantages and disadvantages of fuel cells**

**Advantages:**

- Fuel cells produce electricity by directly converting chemical energy into electrical energy, without involving burning of fuel in the process, thus making them a clean, emissions free energy sources.
- Fuel cells generate water and heat as by-products. This heat from fuel cells can be captured and utilized for other purposes like heating and lighting and the process is called cogeneration. This added benefit of fuel cells help improve their performance to achieve higher efficiencies relative to conventional combustion systems.
- Fuel cell power generation produces no noise, making them suitable for domestic applications like household uses, schools, bussiness buildings, where noise pollution is undesirable . They can also withstand harsh weather conditions and hence are durable and rugged.
- Unlike a battery, fuel cell do not run down or require recharging. Fuel cells produce electricity as long they have fuel available.
- Fuel cells are more reliable relative to other conventional methods because they are free from mechanical vibrations and moving parts Therefore, require minimal maintainance over their lifetime and thus last longer.

**Disadvantages:**

- Not Cost –effective: The biggest hurdle of fuel cells is their cost. Although some of the fuel cell systems are in use today, they are not cost-effective. For standby apllications a typical fuel cell system costs about 3 times the cost of conventional power generation.
- Fuel cells can generate power as long as the fuel, like hydrgen is continuously fed to them. Hydrogen, though is abundantly present in nature, but is not readily available. Therefore a fuel cell system needs a reformer to continuously generate hydrogen from fossil fuels like natural gas, methane etc. However, obtaining pure hydrogen fuel from reformers cost effectively is again a concern when it comes to large scale production.
- Fuel cells as an emerging technology has to cope with the risk of new consumers adopting the technology, leading to exposure for more consumers, as the technology lacks widespread experience in power generation.

### *2.3.3 Applications Of Solar Energy*

Solar powered appliactions range from a simple consumer electonics like calculators to large power stations. Some of solar cell applications are pictured in Figure 2.1. Photovoltaically powered apllications can be broadly classified into two catogories: grid-connected systems and stand-alone systems.

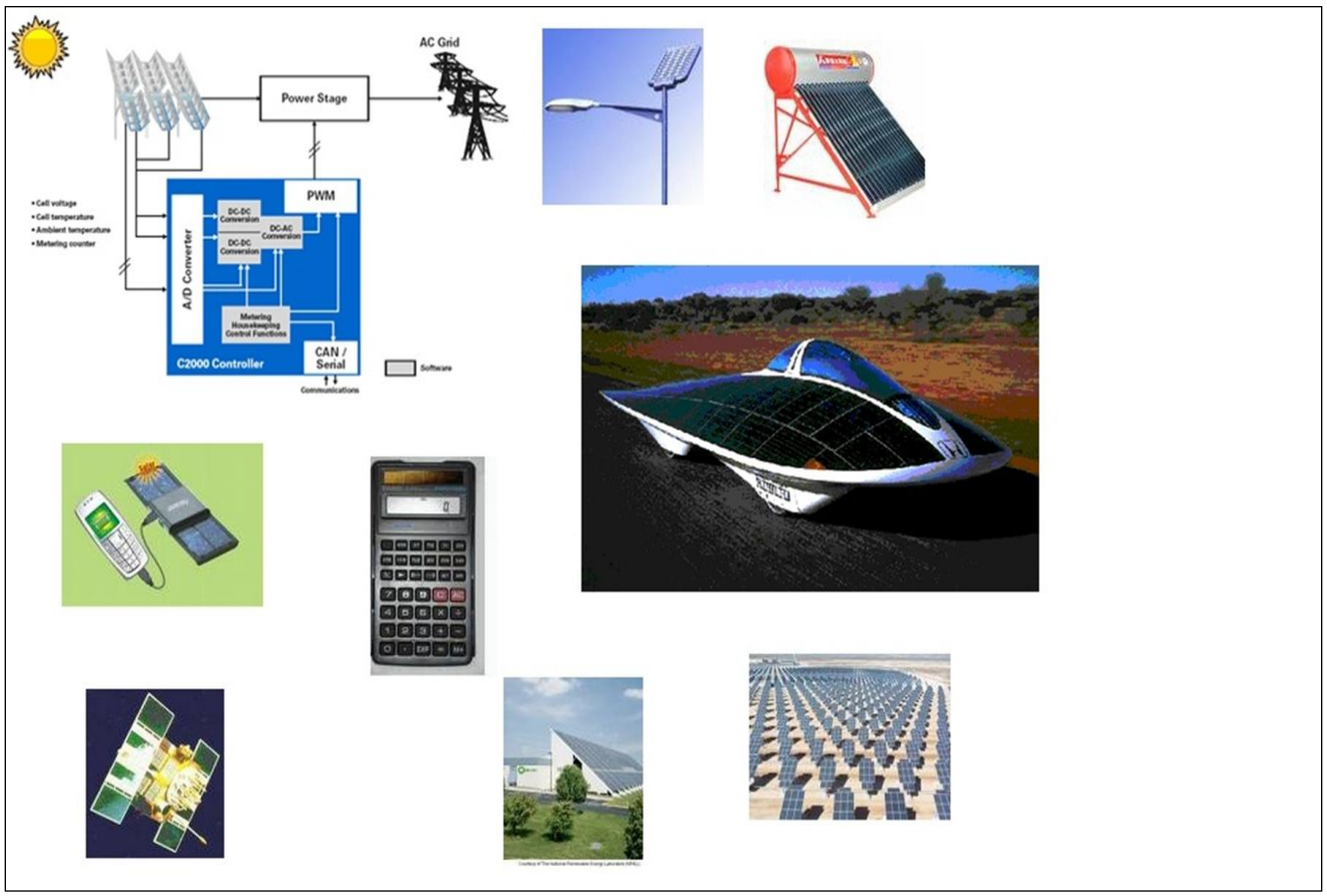


Figure 2.1: Solar Cell applications

**Grid-connected systems**

Photovoltaic systems can generate enough power for application only during sunny days. Hence, some provision has to be made to obtain or store electricity for use during night times and cloudy days. Having photovoltaic systems connected to the grid is one of the ways to back-up power. In such applications, photovoltaic systems incarporates a high quality inverter to produce ac signal same as available on the grid. If the power generated by the PV system is insufficient, electricity can be bought from the power companies through the grid for use. When the PV systems are generating excess power than needed, electricity can be sold back to the power companies, thus significantly reducing electricity bills for consumers. Grid-connected photovoltaic systems normally power houses or commercial buildings, where PV systems installed are small and do not satisfy all the power demands. Here, batteries are less necessary for backing power, because the grid supplies power as and when needed.

**Stand-alone systems**

Applications which do not have grid connections to the PV system are called stand-alone systems. This field of applications are mostly attractive in portable PV systems and in places where running a line extention is difficult and not economical ( in rural places, on mountains, on water ). Often, stand-alone systems need a back-up power storage. In such systems, PV array charges the batteries during high power generation, so it can be used at nights and during cloudy times. There are several applications of PV as stand-alone systems, some of which include:

**Automotives:**

PV systems find applications in automotives like recreartional vehicles, busses, boats etc to directly charge or partly charge vehicle batteries.

**Lighting and Heating:**

Low power dc lighting necessary for various domestic usage find PV as an ideal source to povide lighting for parking lots, homes, traffic signals, informative signs and boards, public-use facilities, billboards and more. However, such PV systems need to be incarporated with batteries, since lighting demands are greatest at nights. PV systems are also used for heating water, air conditioners, etc.

**Consumer electronics:**

Several consumer products successfully utilize PV technology to power small dc appliances like calculators, laptops, cell phones, flashlights, fans, parking meters, watches, security systems, water pumps, emergency call boxes etc.

**Communication:**

Communication signals like in television, radio and phone signals need repeaters over long distances to amplify the signals for correct data reception. These repeater stations are often located at elevated areas, where it is difficult to pull power lines or have costly conventional generators. For such applications PV power systems are ideal. PV is also used on traveler's information transmitters, mobile radio systems,etc.

### *2.3.4 Applications Of Fuel Cells*

Like solar applications, there are endless possibilities where fuel cells can be adopted. Some of fuel cell applications are pictured in Figure 2.2. One of the main application areas for fuel cells is in automotives. Currently, major automakers are developing hybrid vehicles with fuel cell technology. Some of automotives powered by fuel cells include buses, boats, bicycles, planes etc. Stationary applications where fuel cells are finding applications are road signs, vending machines, ATM machines, banks, business centers and others. Also, in consumer products, fuel cells are powering cell phones, computers, vacuum cleaners etc.

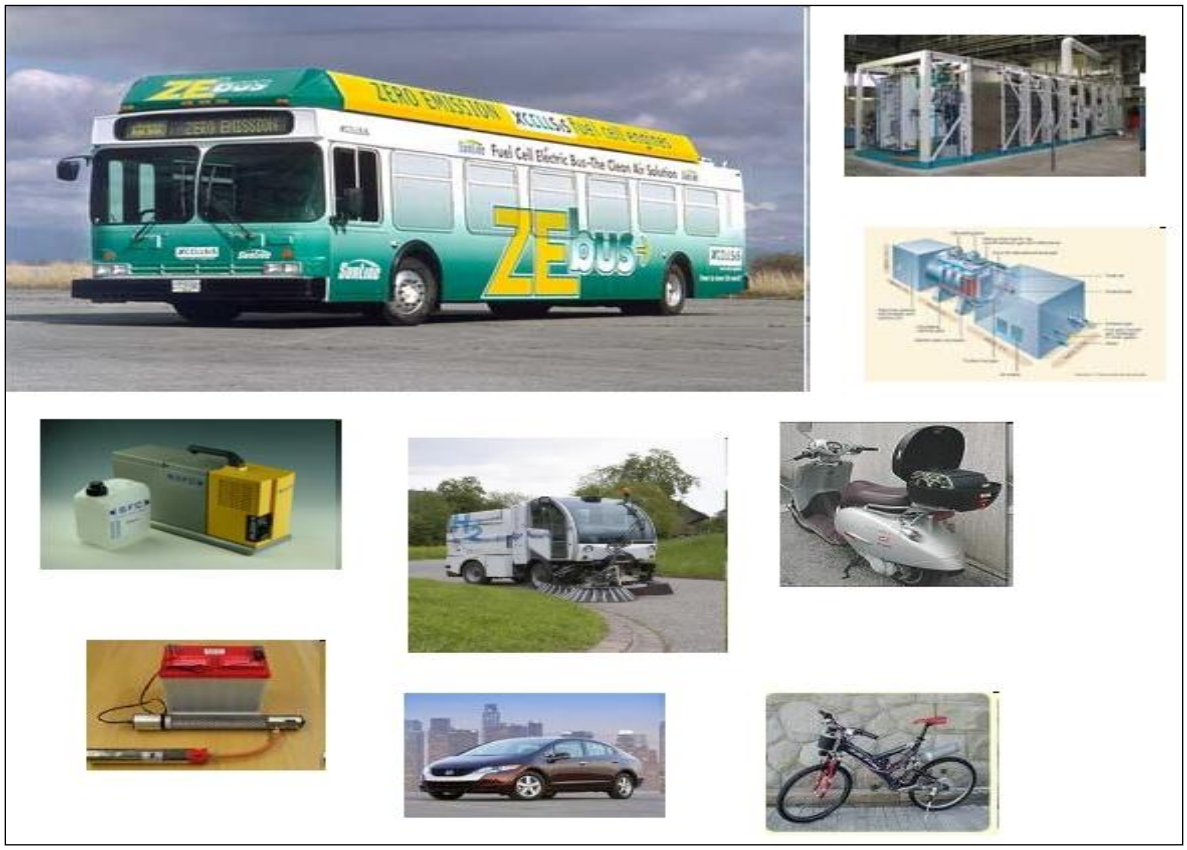


Figure 2.2: Fuel Cell applications

**Stationary**

Fuel cells as stationary power systems are being installed worldwide in places like homes, schools, hospitals, business buildings either as utility interfaced power systems or as grid-independent power systems with battery back-up.

**Automotives**

Features like high efficiency, ruggedness and durability, quietness, low maintenance; fuel cells are sweeping applications in automotives. Major automotives already have in development and are testing with different future automobiles to incorporate fuel cells to power vehicular batteries. Some of the locomotives utilizing fuel cells include busses, scooters, trains, boats etc. A country like India and China, where air pollution is sky rocketing and has become one of the major hurdle for the nation to deal with, adopting fuel cell powered automotives can bring great relief to the problem. Also aviation and military organizations are interested to adopt this technology because of low noise, low emissions and ability to reach greater altitudes.

**Portable Power**

Due to them being light weighted and long lasting compared to batteries, fuel cells have great potential for portable power electronics such as cellular phones, laptops, pagers, hearing heads, portable power tools, meter readers, smoke detectors, and mostly useful for soldiers when they need to carry heavy equipment in the field.

## 2.4 Structure and Working Principle Of Solar and Fuel cells

### *2.4.1 Working principle Of Solar Cell*

A Solar cell in its basic form consist of a photosensitive material in the form of a p-n junction which directly converts incident sunlight into electricity. Figure 2.3 shows a typical structure of a solar cell with solar p-n junctions, front and back electrical contacts, and antireflective coating used to trap more incident light in the cell. Figure 2.4 shows p-n junctions of solar cell when there is no incident light. Photons incident on a solar cell with energy greater than the band gap of the cell material, creates electron-hole pairs. If these carriers before recombining reach near the p-n juntion, the electric field present at the junction seperates the carriers sweeping holes to the p-side and electrons to the n-side to be majority carriers. This charge seperation creates an elctric field which is opposite in direction to that of the pre-existing electric field, thus reducing the net electric field at the juction. Reduction in electric field causes increase in diffusion currents reaching a new equilibrium where now a voltage exists across the p-n junction. If the p-n junction of the cell is subjected to an external load, then the additional carriers generated by absoption of incident photons flows across the load. If the terminals of the cell is open-circuited, then forward bias of the p-n junction increases to a point where the diffusion current in the cell exactly balance the light generated currents, to have the net current zero. At this point, the corresponding voltage across the cell is called open-circuit voltage and represents the maximum voltage that can be obtained from solar cell. Structure of solar cell with incident light generating open-circuit voltage is as seen in Figure 2.5. When solar cell is shorted, then voltage across the p-n junction is zero, and all the light generated current flows through the shorted lead. That is,

the light generated current will be equal to the current in the shorted lead. This current is called short-circuit current and represents the maximum current that can be obtained from solar cell. Figure 2.6 shows generation and flow of short-circuit current across the solar cell when their terminals are shorted. In comparison with a battery, unlike batteries, the electromotive force in a solar cell is driven by a temperory change in its potential caused by light and also solar cells as long as are exposed to light, continue working without running down.

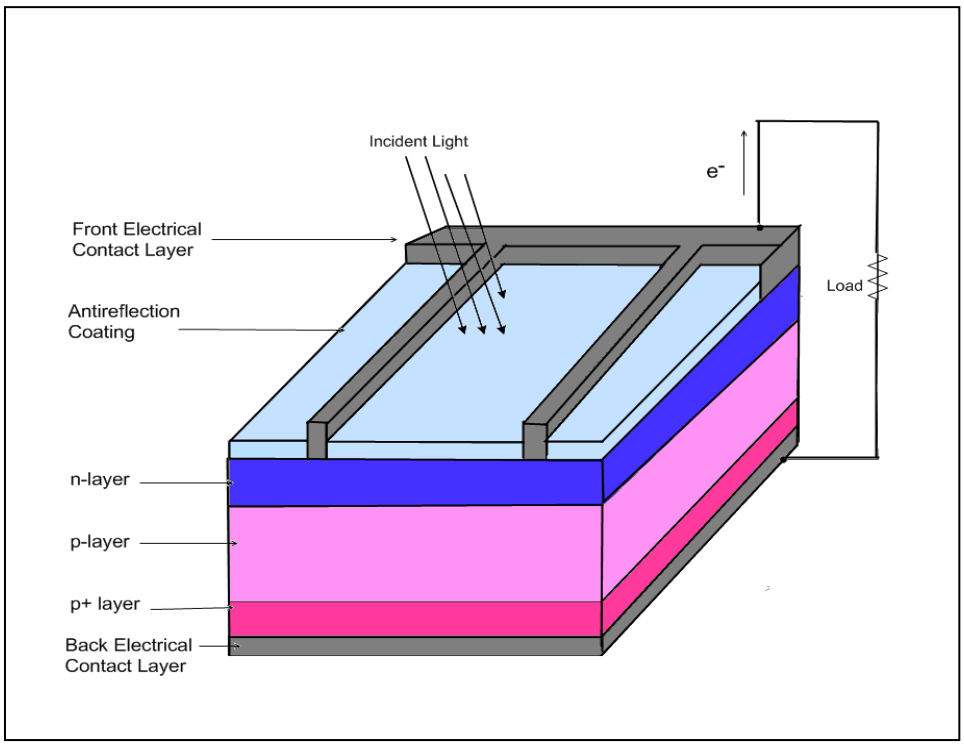


Figure 2.3: Typical Structure of Solar Cell

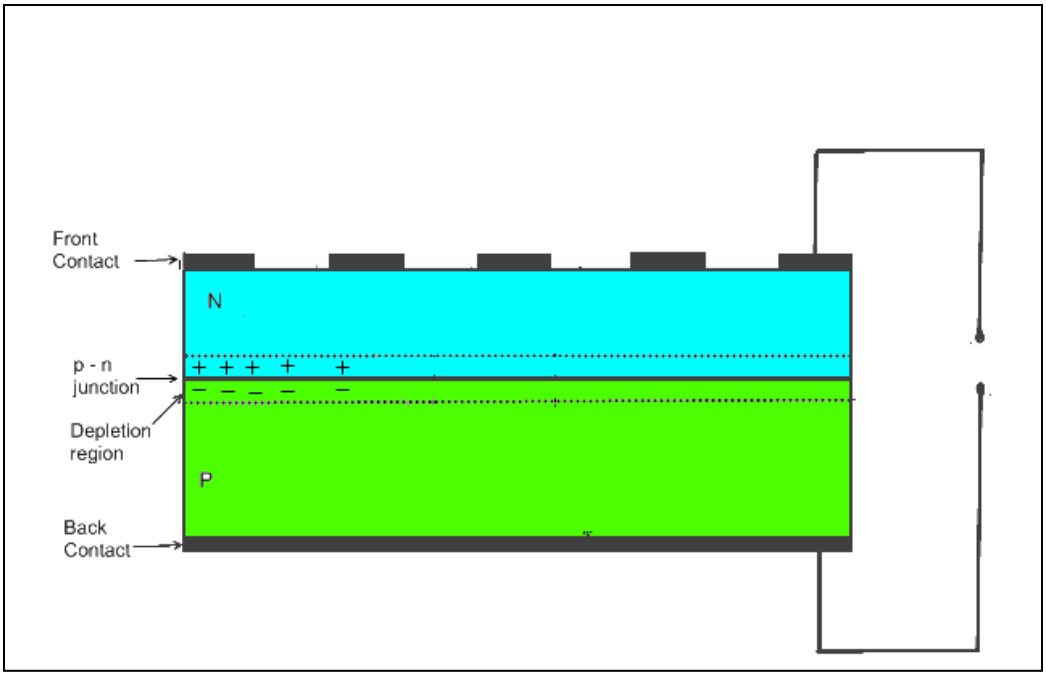


Figure 2.4: Structure of Solar cell with no illumination

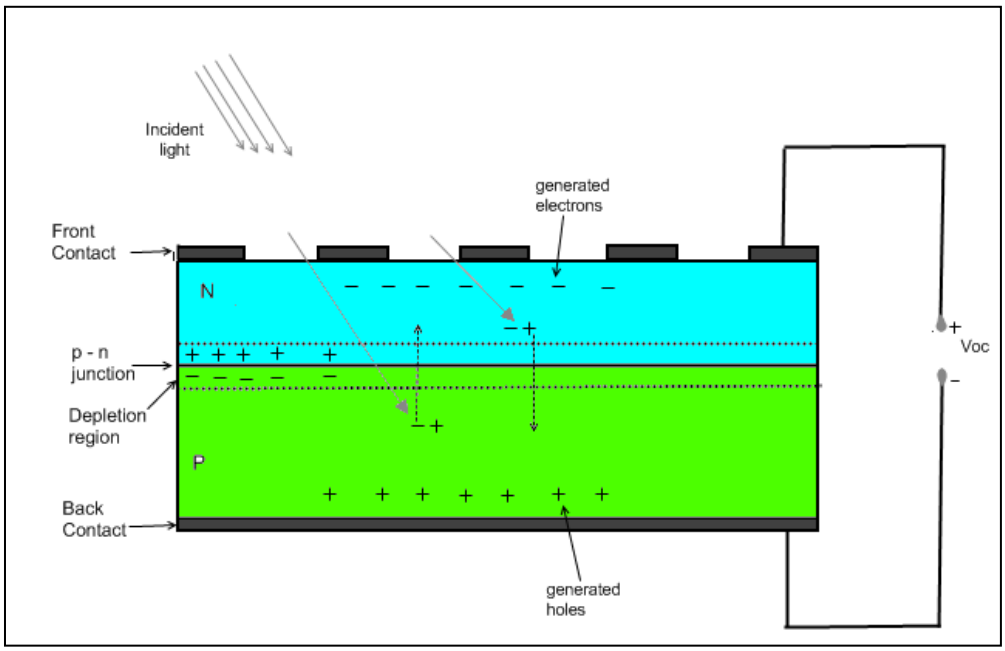


Figure 2.5: Structure of Solar cell with incident sun light generating open circuit voltage

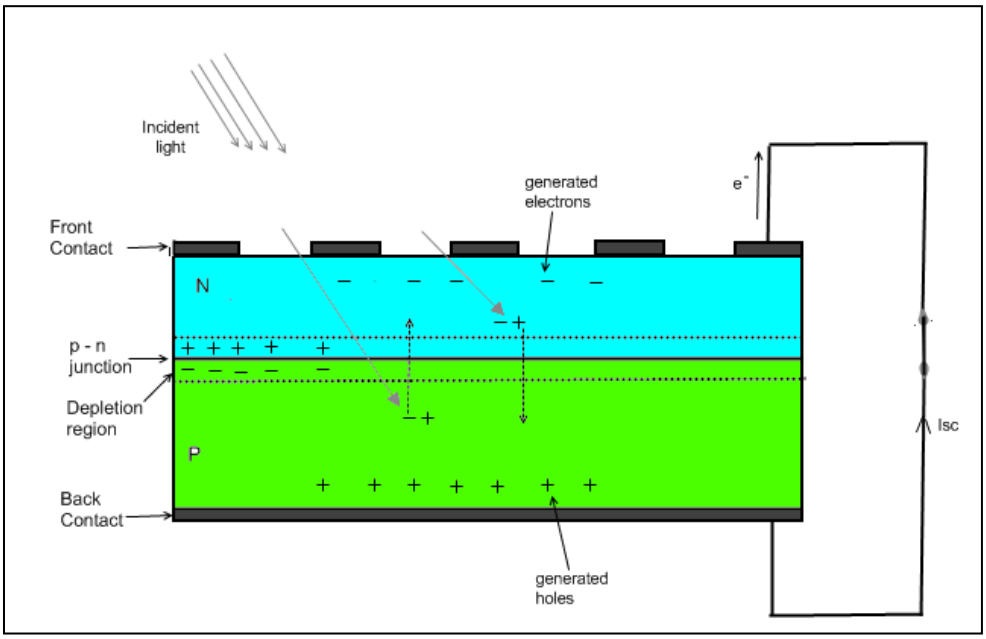


Figure 2.6: Structure of Solar cell with incident sun light generating short circuit current

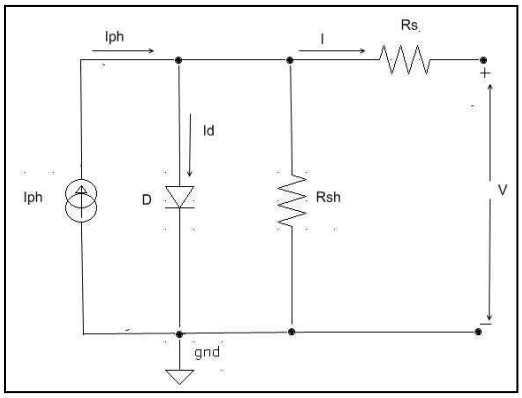


Figure 2.7: Equivalent circuit of Solar cell

The equivalent electrical circuit of solar cells is as represented in Figure 2.7. The current equation in its simplest form for the equivalent circuit can be written as:

$$I = Iph - Id \qquad (2.1)$$

Where, Iph is the photocurrent generated in the cell and Id is the current through the diode D. Id can be substituted with the diode equation as

$$Id = Is \left\{\exp\left(\frac{q\ Vd}{n\ K\ T}\right) - 1\right\} \qquad (2.2)$$

Thus current from the solar cell can be written a

$$I = Iph - Is \left\{\exp\left(\frac{q\ Vd}{n\ K\ T}\right) - 1\right\} \qquad (2.3)$$

The above equation represents ideal current from the solar cell excluding the parasitic effects. In real solar cell there will be a certain amount of leakage of currents through shunt resistance Rsh. Therefore the solar current is written as

$$I = Iph - Id - \frac{Vd}{Rsh} \qquad (2.4)$$

The impact of series resistance on the solar cell can be written as

$$Vd = V + I\ Rs \qquad (2.5)$$

Including parasitic effects in the solar current equation yields,

$$I = Iph - Is \left\{\exp\left(\frac{q\ [V + I\ Rs]}{n\ K\ T}\right) - 1\right\} - \left(\frac{V + I\ Rs}{Rsh}\right) \qquad (2.6)$$

Where Iph is photocurrent, Is is initial current, Rs is series resistance of solar cell, Rsh is shunt resistance of solar cell, q is the electric charge, n is diode ideality factor, k is Boltzmann constant, T is temperature.

### *2.4.2 Working principle Of Fuel Cell*

Fuel cell is an electrochemical cell which generates electricity as long as the fuel and oxidant are supplied continuously. Its working principle is similar to that of a battery consisting of two electrodes; anode and cathode seperated by an electrolytic membrane. Unlike battery, a fuel cell do not reach exhaustion or needs to be recharged. Hydrogen or other hydrocarbons containing hydrogen are commonly used as fuel for fuel cells. Hydrogen acts as energy carrier and not as a source of energy with an ability to store and deliver energy in a usable form. Hydrogen used as fuel for the fuel cells though is abundanly present, but is not readily available in nature, but can be extractred from various energy resources like fossil fuels, renewable energy resources, etc. Thus, hydrogen is the most viable energy carrier for fueling fuel cells. Oxygen acts as oxidant and the electrolyte seperating the two elctrodes vary depending on the type of fuel cell. A typical structure and construction of a fuel cell is as seen in Figure.2.8 and Figure.2.9. Hydrogen enters to the cell at the anode and oxygen is supplied to the cell at the cathode. Hydrogen entered, tend to split into positive ions (protons) and negetive ions (electrons) at the anode electrode. Electrolytic membrane consisting of catalyst , is ususally made of platinum or alloy of platinum, palladium or ruthenium and is capable of conducting protons but not electrons through it. Since more protons are generated at the cathode, a concentration gradient appears between anode and cathode electrodes. This gradient causes the protons to diffuse through the membrane leaving behind the electrones at the anode [17]. Accumulation of protons at the cathode tends to draw electrons, but since they are blocked to flow through the electrolytic membrane they are forced to take if provided, the electrical path through the load to then combine with oxygen and hydrogen positive ions to form water. The following chemical reactions demostrate the process:

At Anode: $2H_2 \longrightarrow 2H^+ + 2e^-$

At Cathode: $O_2 + 4H^+ + 4e^- \longrightarrow 2H_2O$

Overall reaction: $2H_2 + O_2 \longrightarrow 2H_2O$

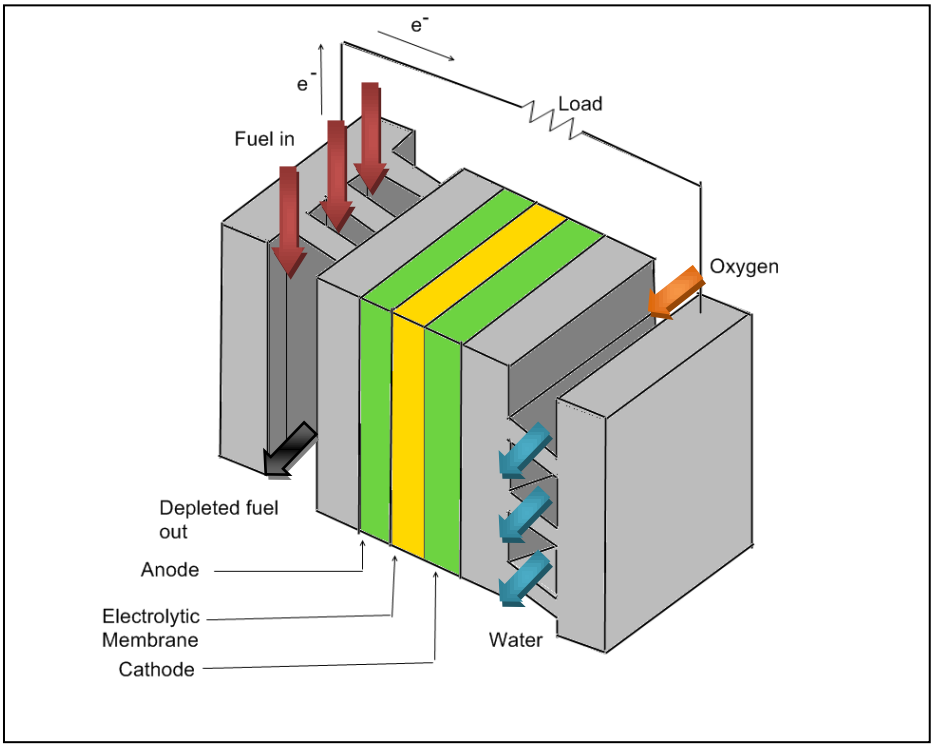


Figure 2.8: Typical structure of Fuel Cell

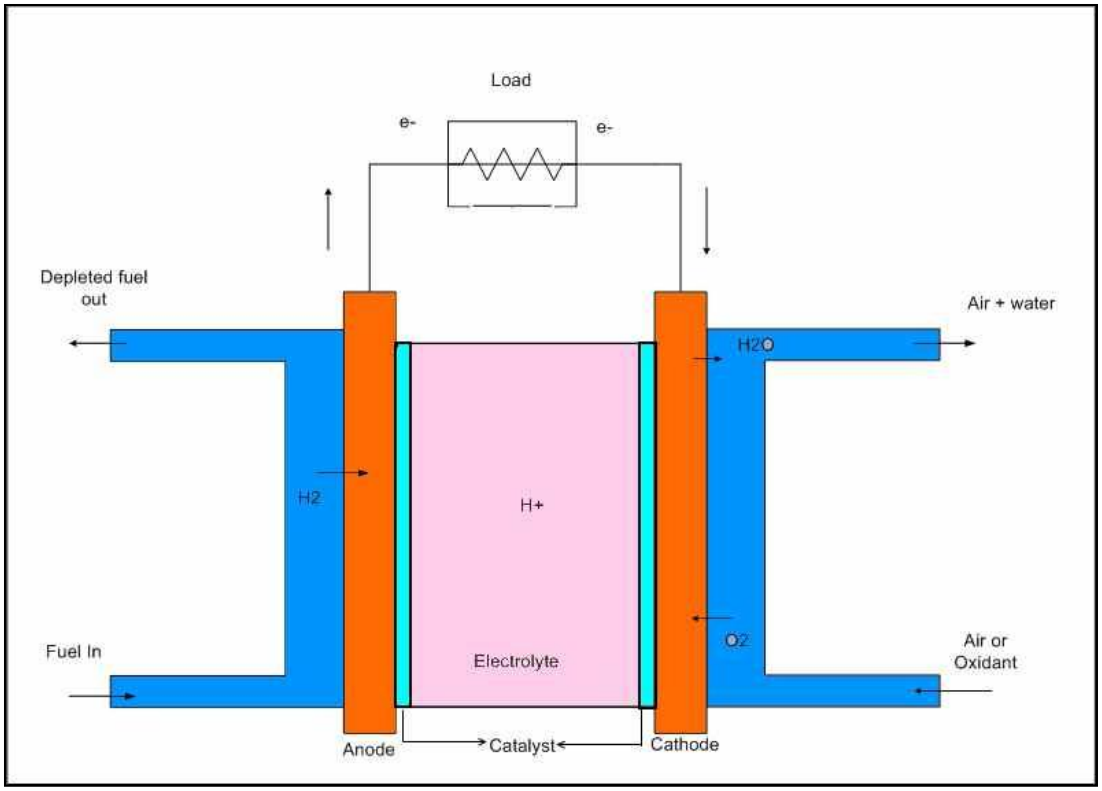


Figure 2.9: Structure of fuel cell unit

Hydrogen required as fuel is obtained from a fuel processor also known as reformer. If pure hydrogen is used as fuel, then the by-products will be water and heat. But, since hydrogen fuel is mostly extracted from hydrocarbons using reformer, certain quantity of carbon-dioxide will be generated during the process. Thus, any fuel cell system inclusive of a reformer produces water, carbon-dioxide and heat as end products. Though a fuel cell system produces carbon –dioxide as a bi-product , it is relatively in far lesser quantity compared to the present air quality regulations, having a low negetive impact on the environment.

## 2.5 Different Types Of Solar And Fuel Cells

### *2.5.1 Types of Solar Cells*

Solar cells can be classified based on their, material thickness, crystal orientation or type of semiconductor junction materials. Here a classification of solar cells based on their semiconductor material thickness is discussed. Solar cells can be classified into two main categories as crystalline silicon or wafer based thick silicon solar cells and thin film solar cells.

**Wafer based thick Solar Cells**

The bulk material for these cells is crystalline silicon also abbreviated as c-Si. Different categories of these cells based on their crystal orientation include monocrystalline and polycrystalline silicon cells. Production of monocrystalline silicon cells is expensive as they include expensive Czochralski process and are cut from single crystal silicon ingot wasting good amount of refined silicon. Ribbon silicon cells, a type of monocrystalline silicon cells reduce production cost to a great extent as they substantially reduce silicon waste. Ribbon silicon films are formed by pulling thin silicon films from molten silicon surface and so are not associated with sawing silicon ingot, but their efficiency is quite low. Polycrystalline solar cells are developed from large blocks of square ingots obtained by carefully cooling and solidifying molten silicon. Polycrystalline silicon cells though are less expensive, their efficiencies are lower compared to crystalline silicon solar cells.

**Thin - film solar cells**

Thin film solar cells require less semiconductor material and are easier to fabricate and integrate, light weight and flexible and so are less expensive than wafer based solar cells. Number of thin-film materials are being developed like Cadmium Telluride (CdTe), Copper Indium Diselenied (CIS), which are developed as heterojunction solar cells. Homojuction thin-film solar cells include materials like Gallium Arsenide (GaAs), Indium Phosphide (InP), amorphous –silicon (a-Si), polycrystalline silicon solar cells. CdTe material is easy to deposit and is suitable for large scale production, but the cadmium present in it is toxic. CIS is attractive as thin film material because, they have high optical absorption co-efficient and their optical and electrical characteristics can be tuned for specific need. A slight variation of CIS obtained by adding Gallium gives copper Indium/Gallium diselenide (CIGS), which shows higher efficiency. Multijunction solar cells based on GaAs solar cells show high efficiencies. Materials of a multijunction solar cells are carefully chosen such that to absorb electromagnetic radiation over a wide spectrum thus increasing their efficiencies. Polycrystalline silicon solar cells possess high open circuit voltage and are less expensive to produce, but have energy conversion efficiencies lower than c-Si. Amorphous silicon has higher band gap and thus absorbs solar spectrum more strongly.

**Novel Materials**

New materials developed for solar cells include light absorbing dyes or dye-sensitized solar cells and organic or polymer solar cells. Dye-sensitized solar cells have reduced production costs, but they suffer from degradation from ultraviolet light and heat. Organic solar cells are made from

thin film organic semiconductors like carbon fullerene etc. Compared to bulk silicon energy conversion efficiencies of organic solar cells are low. Table 3 summarizes different solar cell types.

**Table 3: Classification of Solar Cells**

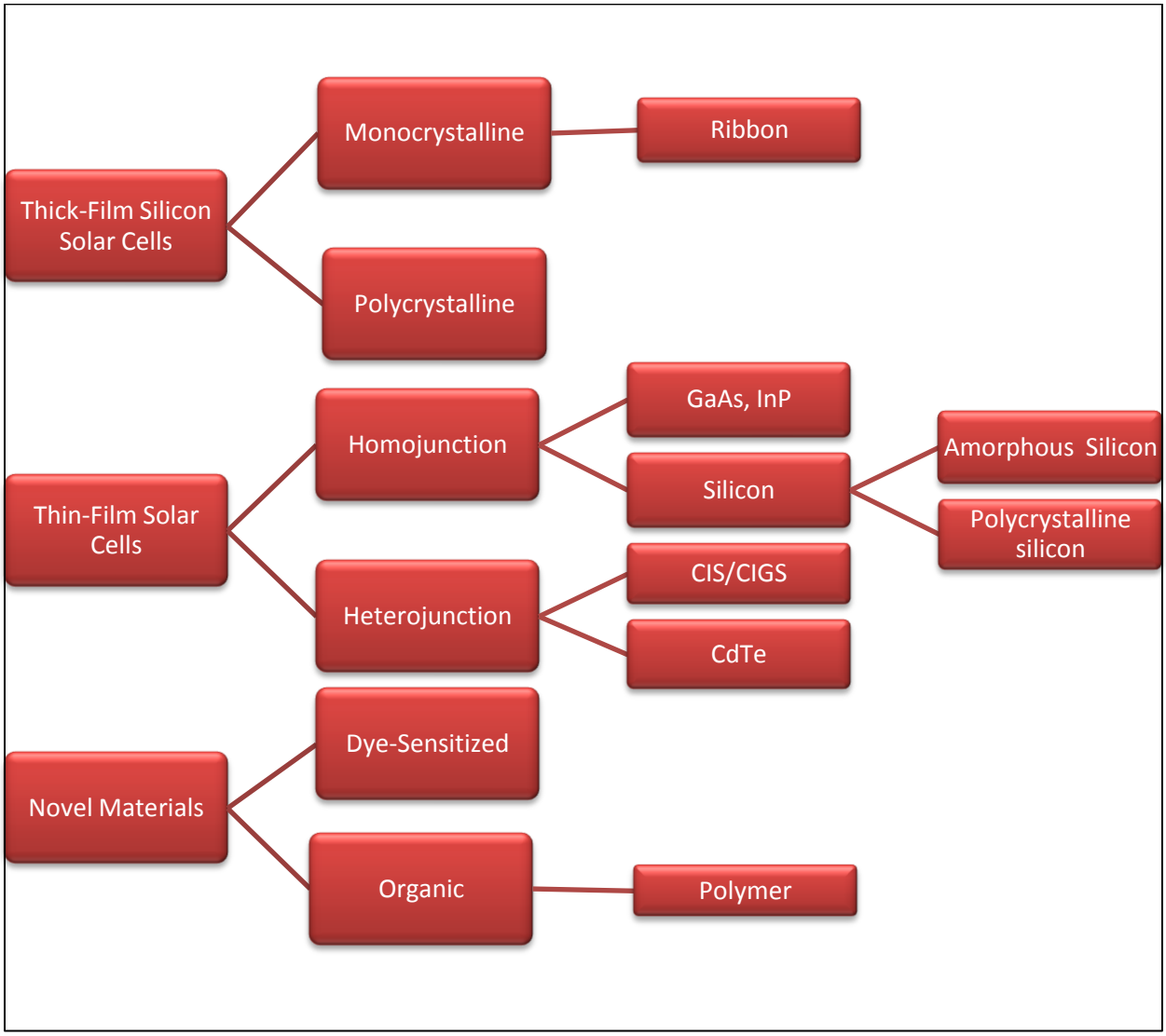

### *2.5.2 Types of Fuel Cells*

Fuel cells can be classified based on the type of electrolyte used and temperature. Here a general classification based on the type of electrolyte used is presented. Six different types of fuel cells are used for various applications depending on their essential working nature. They are:

**Proton Exchange Membrane (PEM) fuel cell**

They are also called proton exchange membrane fuel cells or solid polymer electrolyte fuel cells. PEM fuel cells operate at relatively lower temperatures in the range $50^{o}C$ - $100^{o}C$. Since they operate at low temperatures, they are mainly attractive for applications in automotives because of their features like high power density, low temperatures, quick start-up response, and high efficiencies. However, some of their limitations are, they need pure input fuel, due to low operating temperature co-generation is restricted to water heating and lighting, and the type of fuel cell is prone to carbon monoxide contamination of the catalyst used.

**Direct Methanol fuel cell (DMFC)**

Like PEM fuel cells DMFC use polymer membrane electrolytes. DMFC can utilize liquid fuel directly as an input eliminating the need for fuel reformer. Limitations with these types include catalyst poisoning and control of liquid fuel flow.

**Phosphoric Acid fuel cell (PAFC)**

PAFC operate at higher temperatures around $200^{o}C$ due to which the waste heat generated for them can be effectively used for co-generation further boosting their efficiency. Additionally

PAFC can withstand carbon monoxide contamination to some extent, but high operating temperatures could lead to material breakdown and have slow start-up problems.

**Alkaline fuel cell (AFC)**

AFC known for their usage in space shuttle for electricity generation and drinking water produced as a by-product from them. They can achieve high efficiencies, but they are susceptible and intolerant to carbon contamination making them very likely applicable for non-terrestrial applications.

**Molten Carbonate fuel cell (MCFC)**

MCFC operate at high temperatures like 650$^{o}$C, which makes the waste heat generated used for good quality co-generation. Also, such fuel cells are not affected by carbon monoxide contaminations; instead carbon monoxide acts as a part of fuel for the cell. Drawback involved is, corrosive operating environment degrades cell durability.

**Solid Oxide fuel cell (SOFC)**

SOFC operate at very high temperatures making them suitable for stationary applications like large power stations. Waste heat generated can be used to co-generation like water heating, space heating and also for internal fuel reforming. Table 4 summarizes different types of fuel cells.

**Table 4: Classification of Fuel cells**

| Features / Types | Electrolyte | Operating Temperature | Catalyst | Fuel used | Efficiency | Applications |
|---|---|---|---|---|---|---|
| PEMFC | Proton exchange membrane or solid polymer | 50 -100$^{o}$C | Platinum | Pure hydrogen | 45% | Portable and stationary power, automotives |
| DMFC | Proton exchange membrane | 50 -90$^{o}$C | Platinum | $CH_3OH$ | 40% | Portable power, transportation |
| AFC | Potassium Hydroxide (KOH) | 100 -200$^{o}$C | Platinum, $Ni/NiO_x$ | Pure hydrogen | 50-65% | Space application, transportation, portable power |
| PAFC | Phosphoric acid | 180 -220$^{o}$C | Platinum | Pure Hydrogen | ~40% and ~85% with co-generation | Stationary power generation, co-generation |
| MCFC | Potassium, Lithium and Sodium carbonates | ~650$^{o}$C | $Ni/LiNiO_x$ | $H_2$,$CH_4$, CO | 50%-55% and ~85% with co-generation | Stationary power generation, co-generation |
| SOFC | Solid oxide | 600 -1000$^{o}$C | Ni | $H_2$,$CH_4$, CO | 50%-60% and 80-85% with co-generation | Stationary power, portable power, co-generation |

## 2.6 Issues with Solar and Fuel cells

Solar and fuel power systems, where modules are integrated with power converters have to cope with certain undesired dynamic behavior of the modules which can degrade system performance. Solar cells are associated with a single operating point at which the power from the module or array is maximum. To obtain higher efficiencies, solar cells need to be worked at their maximum power point. Since power from a solar module is dependent on incident sunlight and temperature, solar maximum power point also changes accordingly, thus making it difficult to obtain maximum power from the module. Therefore, solar power systems need a mechanism to track its maximum power point with the changing irradiation. Thus, solar power systems are incorporated with a maximum power point tracking which increase the complexity and cost of the overall system. Another major issue with solar modules is shading effect. Partial or uniform shading effects reduce the power available from the module thus hindering their efficiencies. Also, partially shaded cells in a module instead of delivering power, acts as load and dissipate power drawn from the other functioning cell of the module. This can lead to severe voltage loss from the module. This shading problem to a certain extent are solved connecting bypass diodes in parallel to modules to bypass current from the shaded cell to the next functional solar cell or module.

Fuel cell systems on the other hand have slow transient start up response, and hence normally require an arrangement of auxiliary energy storage. In grid connected fuel cell power applications, usually a battery is needed to supply power during system start-up and for stand-alone systems batteries are needed to be incorporated in the system as a back-up power during

sudden load demands. Other issues with fuel cells are, they cannot accept reverse current or recharged. Therefore, a reverse diode to block the reverse current is included in the system to avoid reverse current from flowing into the fuel cell stack.

# CHAPTER 3 SOLAR AND FUEL CELL MODELING IN CADENCE SPICE

## 3.1 Eqivalent Circuit

### *3.1.1 Equivalent Circuit Model for Solar cell*

Equivalent circuit of Solar cell as shown in Fig.3.1 simulated in Cadence Spice is modeled using an ideal current source, a diode and resistive components for parasitic effects. Current source represents the photocurrent generated in the cell driven by sunlight, diode represents the p-n junction of Solar Cell, series resistance, Rs, represents resistance of the solar p-n junction material to the flow of current and a shunt resistance, Rsh, describes the leakage currents through the cell and voltage source V represents the terminal voltage of the solar cell.

**Static Model of Solar Cell**

In the SPICE simulation package, the diode model can be adjusted to match the I-V characteristics of a solar cell by choosing suitable values for the following parameters: Is (saturation current), N (ideality factor). Rs (diode parasitic resistance), Vj (diode junction voltage). Diode ideality factor, N, among the other model parameters affects the shape of the characteristic most and it has to be carefully chosen to match the I-V characteristics of solar cell. The junction voltage of the diode determines the maximum voltage obtained from the solar cell. Apart from the diode model parameters, the series and shunt resistances of solar cell circuit must

also be carefully chosen to match proper terminal characteristics. Figure 3.1 shows the static equivalent circuit of single solar cells simulated in cadence SPICE.

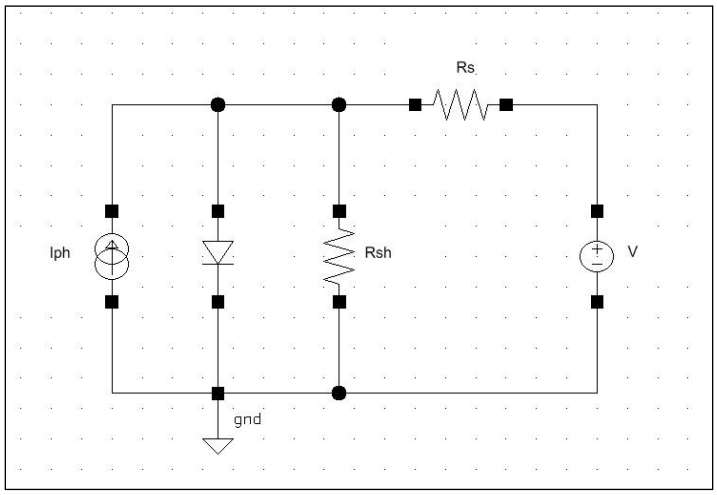


Figure 3.1: Static equivalent model of solar cell in cadence SPICE

**Dynamic Model of Solar Cell**

Most common equivalent circuits for solar cells are represented as seen in Figure 3.1. But, some studies of solar cells like dye-sensitized solar cells (DSSC) confirm the existence of capacitance nature associated with the cells which are time dependent and are unique and significant in DSSC solar cells than compared to silicon solar cells [13]. Studies show that, when an incident beam applied on a silicon solar and a DSSC solar cells is cut off, short circuit current of silicon solar cell go to zero almost immediately, whereas DSSC solar cells takes some time equivalent to the discharge time of the inherent capacitance of the cell to reach zero, confirming the presence of capacitance effect in DSSC and other similar cells [13]. These time-dependent capacitances might influence the dynamic response of solar systems where they are interfaced with power

converters. Hence, to model dynamic nature of solar modules, series and shunt capacitances Cs and Csh are included in the dynamic equivalent solar cells circuit as seen in Figure 3.2 simulated in Cadence SPICE.

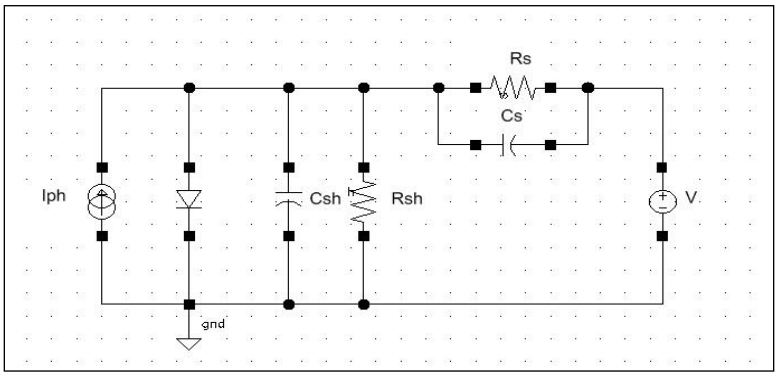


Figure 3.2: Dynamic equivalent model of solar cell in cadence SPICE

### *3.1.2 Equivalent Circuit Model for Fuel cell*

There are many approaches to modeling fuel cells in Spice simulation package. In this study a model developed in [1] is adopted to model fuel cell typical terminal characteristics. Fuel cells are associated with three different power losses known as activation polarization, ohmic polarization and concetration polarization, depending on magnitude of current flow through the cell. The model inhibits different operating regions of fuel cell by utilizing nonlinearity of diode and current control features of BJT. Diode in the model is utilized to represent both activation and ohmic losses in the cell and two BJTs are used to model concentration losses. Further , the equivalent circuit could also modeled to include the dynamic nature of the cell, using a capacitor and an inductor to represent charge double layer and undershoot in stack voltage of fuel cell.

**Static Model of Fuel Cell**

Static model of fuel cell simulated in cadence Spice is shown in Figure 3.3. The diode D in the circuit is used to model activation and ohmic losses in the fuel cell. Fuel cell is characterized by an activation loss due to slow electrochemical response at the cell electrodes to the flow of current. In Spice simulation, diode junction potential Vj provides a similar barrier effect to the flow of current. Also, the series resistance Rs of the diode in the model is utilized to model the ohmic losses of the fuel cell which follows activation losses of the cell. In Spice simulation, activation loss is visible even if the diode is not included in the equivalent circuit; however including diode in the circuit increased the activation losses more significantly. This is because, the BJTs present in the circuit which is nothing but two p-n junctions connected back to back are also associated with junction potential barriers which have contributed to the activation losses. Greater the diode potential barrier, activation losses becomes more significant. Apart from diode junction potential Vj, series resistance Rs, other parameters from the diode model affecting the polarization curves are saturation current Is, diode ideality factor N, and high-injection knee currents IKF. N and Is affect the shape and magnitude of the polarization curves.

Concentration losses in fuel cells which is due to shortage of input fuel and oxidant in response to the rate of usage, is modeled using a current limiting circuit consisting two BJTs B1 and B2, and resistors R1 and R2. Resistor R2 acts as current sensing resistor, which limits the current flow through B2. As the current exceeds a set limit through resistor R2, B2 starts conducting. This in turn decreases the base voltage of B1 leading to a decrease in B2 emitter voltage exponentially [1]. R2 as the sensing resistor controls the point at which concentration

polarization starts and R1 after the turn-on of B2, represents the slope or rate of change of voltage of the concentration or mass-transport loss. In Cadence Spice simulation package, BJT model parameters like, saturation current Is and high-injection knee currents IKF were modified to obtain fuel cell concentration losses.

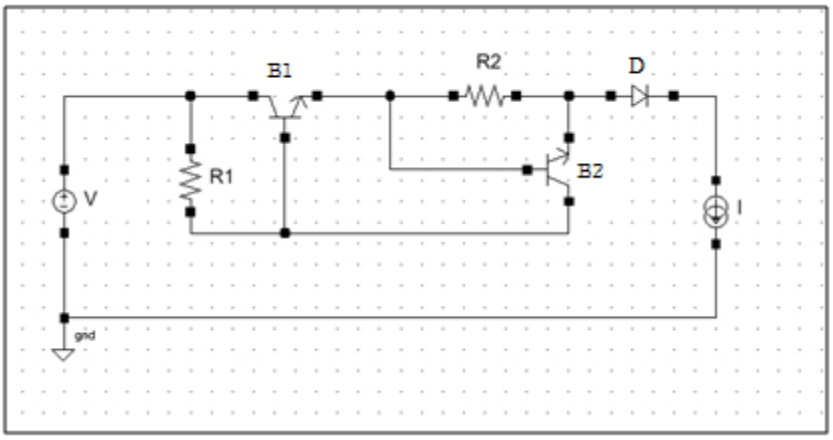


Figure 3.3: Static equivalent model of fuel cell in cadence SPICE

**Dynamic Model of Fuel Cell**

Working of fuel cells involves diffusion of charges between the electrodes. Due to this diffusion effects, there exists a charge double layer which acts like a storage of electrical charges at the electrode-electrolyte interface and very much behaves like a capacitor. The result being, if there is a change in the currents in the cell, then the corresponding change in the operating voltage do not happen immediately but takes certain time to reach its new value [1]. Therefore, a capacitor C-fuel representing charge double layer is included in the dynamic equivalent circuit model as shown in Figure 3.4. Unlike ohmic losses, activation and concentration losses which are related to sluggish response and electrochemical kinetics at electrode-electrolyte interface would have

impact from the charge double layer, present at the electrode-electrolyte interface. Small undershoot in stack voltage is observed in fuel cell when there is a step change in the load currents, caused by temporary insufficiency of air flow due to slow response of the air pump to reach higher speed in response to step increase in load currents [1]. This behavior is modeled using capacitor C-fuel and inductor L-fuel in the dynamic equivalent circuit of fuel cell.

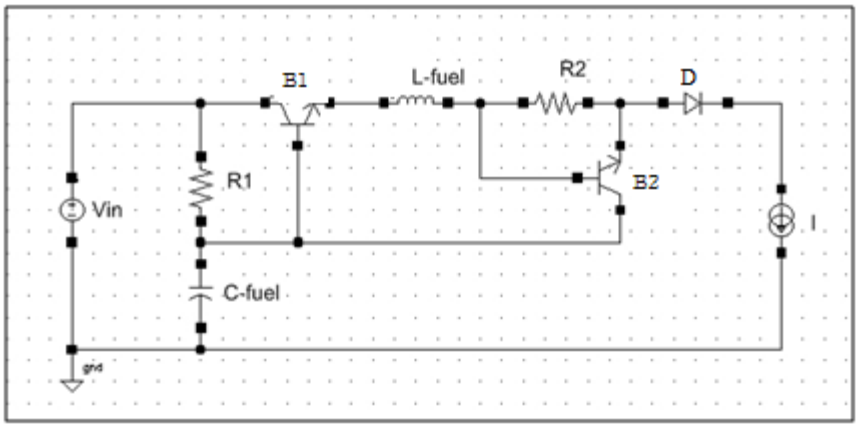


Figure 3.4: Dynamic equivalent model of fuel cell in cadence SPICE

## 3.2 Polarization Characteristics

### *3.2.1 Polarization Characteristics of solar cell*

Polarization characteristics or terminal characteristics or I-V curve of solar cell simulated in Cadence Spice is shown in Figure 3.5. I-V curve of solar cell is characterized by two main factors, short-circuit current Isc and open-circuit voltage Voc seen in Figure 3.5. Short circuit current as discussed before in section 2.5 is due to charge carriers generated in the solar cell driven by sunlight. For an ideal solar cell, short circuit current that is when voltage across it is

zero is equal to the light generated current and is the largest current that could be obtained from the solar cell. Factors that effects short-circuit current are area of solar cell, number of incident photons, temperature, diffusion length of the cell etc. Other parameter of solar cell is the open-circuit voltage corresponds to the maximum solar cell voltage available at zero cell current. Factor influencing open-circuit voltage includes, temperature, diffusion length of the material and minority carriers at the solar p-n junction. There is a tradeoff in controlling diffusion length to have higher open-circuit voltage. Lower the diffusion length of the material, quicker the carriers can overcome the barrier due to recombination increasing the forward bias current, but higher voltage can be obtained with less recombination and thus with longer diffusion length.

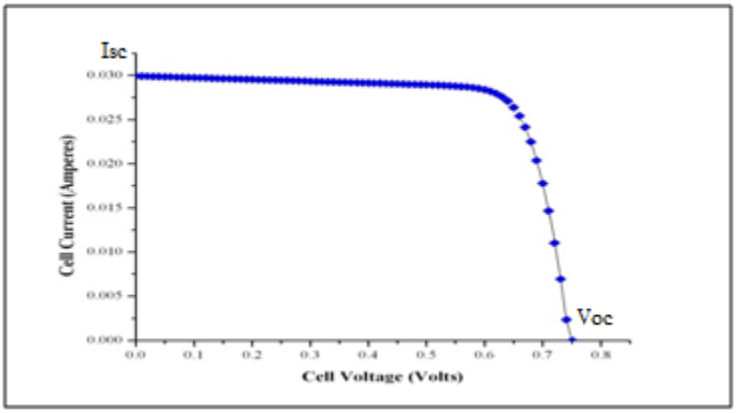


Figure 3.5: I-V curve of single Solar cell

Corresponding P-V curves of the solar cell simulated in cadence Spice is as shown in Figure 3.6 From the curves it is observed that the peak power from the solar cell is achieved at a particular value of cell voltage and cell current. The point at which, maximum power can be achieved from the cell is called Maximum power point (MPP). It is desired that solar cells work at MPP to

achieve maximum utilization of solar cell and have greater efficiencies. Several factors affect any solar cell to work at ideal MPP at all times, some of them include, parasitic losses in the cell, temperature, shading effects on solar cells, poor irradiation etc.

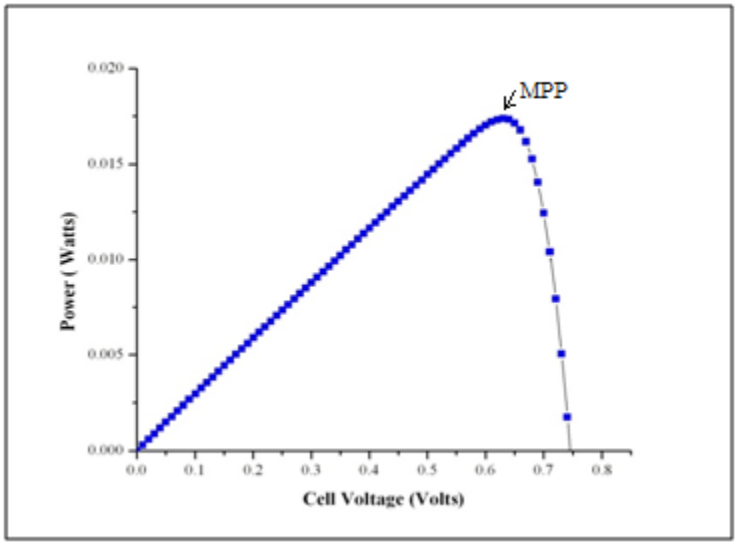


Figure 3.6: P-V curve of single Solar cell

### *3.2.2 Polarization Characteristics of fuel cell*

Fuel cells are associated with various irreversible voltage losses at different current densities through the cell. These voltage losses are caused by various factors associated with fuel cell dynamics to cause the ideal or real cell voltage to degrade. The losses in the cell are also called polarization and are categorized depending on their dominance at particular current densities. Three different losses are classified as activation polarization at lower currents, ohmic polarization at moderate currents and concentration polarization at higher currents. Polarization curve of PEM fuel cell simulated in Cadence Spice is shown in Figure 3.7 with different regions

of voltage drops depending on the cell currents. For PEM fuel cells, its ideal voltage is calculated to be about 1.2 Volts [1] at room temperature. The polarization curves show the maximum voltage available from the cell about 1.2 volts and the deviation of the cell voltage from the ideal value of voltage due to different voltage drops. Corresponding P-I curves of the fuel cell is as shown in Figure 3.8. As in solar cell, the maximum power from the fuel cell is obtained only at a particular voltage and currents from the fuel cell. Different regions of polarization losses are discussed below.

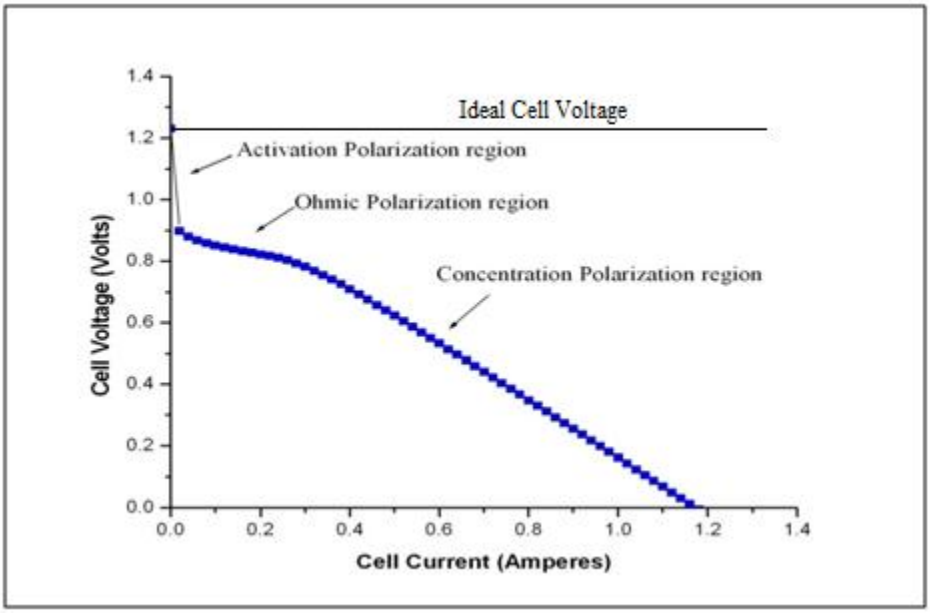


Figure 3.7: V-I curve of single PEM Fuel cell

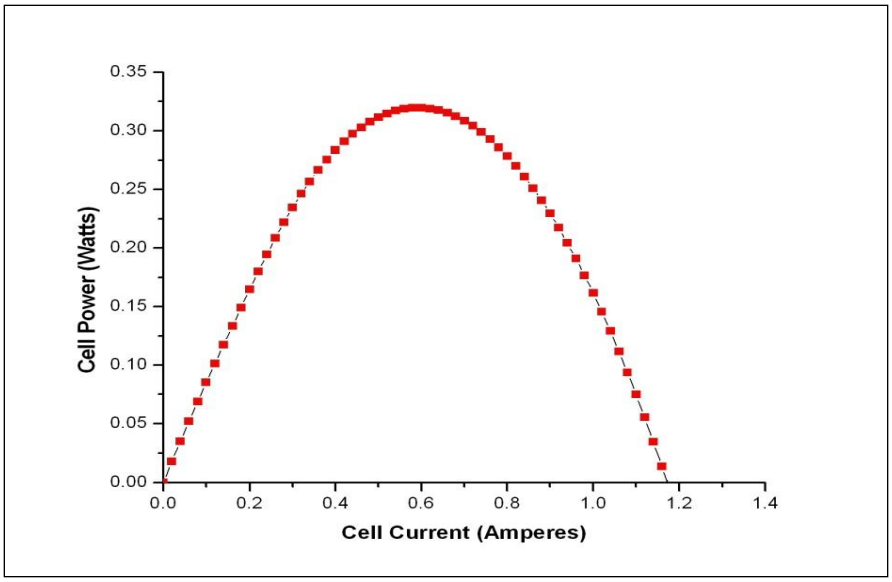


Figure 3.8: P-I curve of single PEM Fuel cell

**Activation polarization**

Activation polarization loss occurs due to sluggish response of the electrochemical reaction happening at electrodes due to electrode kinetics. Activation losses are dominant at low fuel cell currents and are non-linear voltage drop. These losses degrade terminal voltage from the fuel cell to a great extent. If observed in the polarization curve in Figure 3.7, it is seen that the activation voltage drop significantly reduces fuel cell voltage from ideal potential from 1.2 Volts to 0.9 volts with a loss of about 25% from the ideal value. Activation losses are irreversible and are unavoidable.

**Ohmic polarization**

Ohmic losses are due to the resistance offered by electrodes and electrolyte to the flow of carriers across fuel cell. These losses are more linear in nature unlike activation losses, dominant at medium currents, and increases with increase of currents as seen in Figure 3.7.

**Concentration polarization**

Concentration polarization happens due to the shortfall of the reactants such as fuel and oxidant when their consumption rate is greater than available at the input. These losses dominate at higher currents and could be quite severe causing greater degradation of cell voltage.

## 3.3 Aggregation Of Solar and Fuel Cells

Solar and fuel cells provide low dc power output, and thus normally when more power is needed cells are aggregated in series and parallel combination to provide necessary power for applications. The following section demonstrates modeling solar module and fuel cell stack in cadence SPICE to obtain higher power suitable to input to the power converters .

### *3.3.1 Series Architecture*

Connecting many cells in series results in an increased terminal voltage from the solar module. This is most commonly used method to produce higher power from the cells. The only disadvantage from this architechture is the failure mode, which is, if any cell in a module fails, it

acts as open circuit to the module and the whole system might become non-functional. For this reason, bypass diodes and blocking diodes are normally included in the module so that if any cell fails to work, the diode bypasses the current through it to the next working cell. The equivalent circuit of solar cells connected in series to obtain higher cell voltages is as shown in Figures 3.9. The series architechture of solar cell as seen in Figure 3.9 (a) represents series connected cell as in real solar arrays, however an alternative and simplified construction of the same as seen in Figure 3.9 (b) can be used for simulation purposes, where Iph represesnts the equivalent photocurrent source from all the cells connected in series. The diodes can be connected in series depending on number of cells. All the series and shunt resistances from the cells can be substituted by one Rs and Rsh with equivalent values from all the cell resistances. The polarization curves for the circuit in Figure 3.9 is shown in Figure 3.10 and 3.11. The terminal voltage is increased depending on number of cells in series but the cell current remains unchanged.

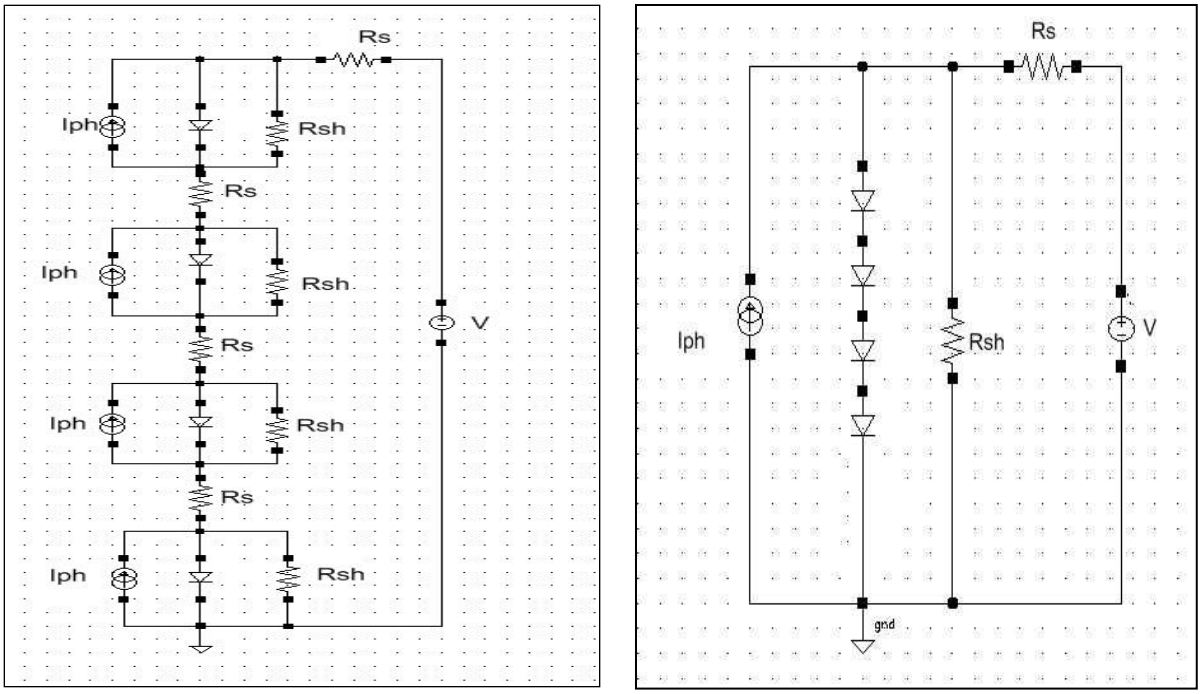


(a) (b)

Figure 3.9: Equivalent circuits of series connected solar cells in cadence SPICE

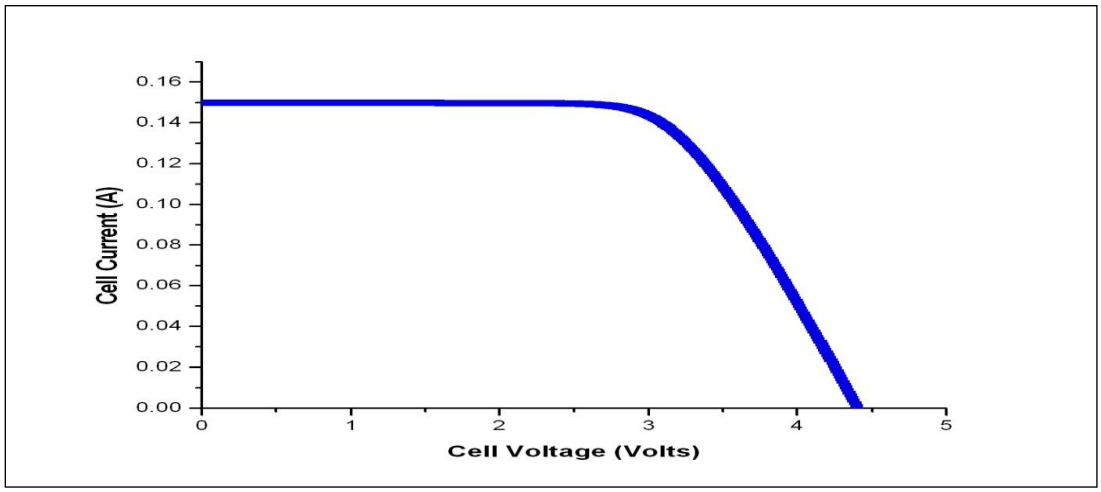


Figure 3.10 : I-V curve of series connected solar cell

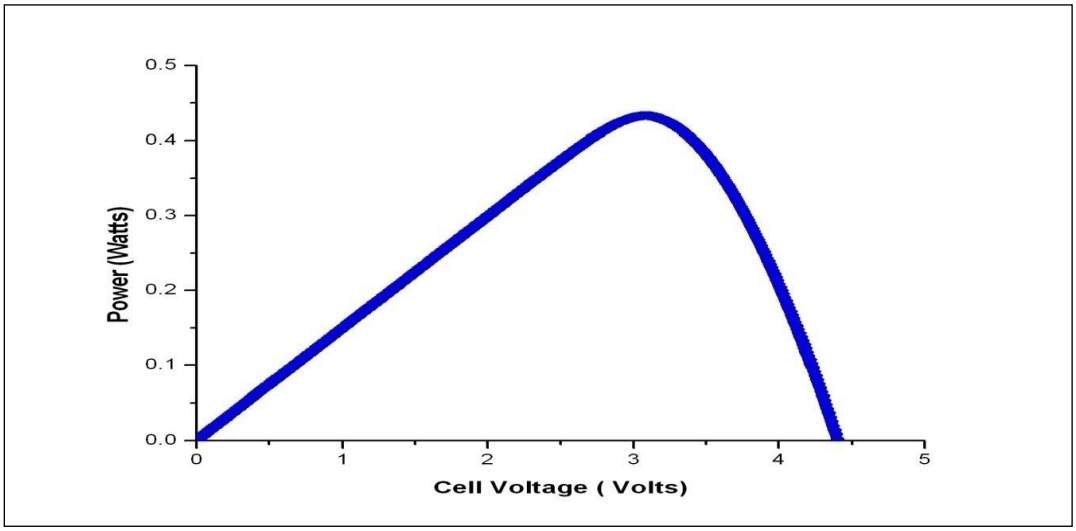


Figure 3.11: P-V curve of series connected solar cell

Similar to aggregating solar cells in series, fuel cells are also stacked serially to obtain higher cell terminal voltages. Figure 3.12 shows equivalent circuits of four fuel cells connected in series simulated in cadence spice. An alternative circuit as seen in Figure 3.12 (b) with a diode to modeling activation losses and single voltage source with equivalent values can be used. The V-I and P-I curves for the circuit in Figure 3.12 is shown in Figure 3.13 and 3.14. The terminal voltage is increased depending on number of cells in series but the cell current remains unaltered.

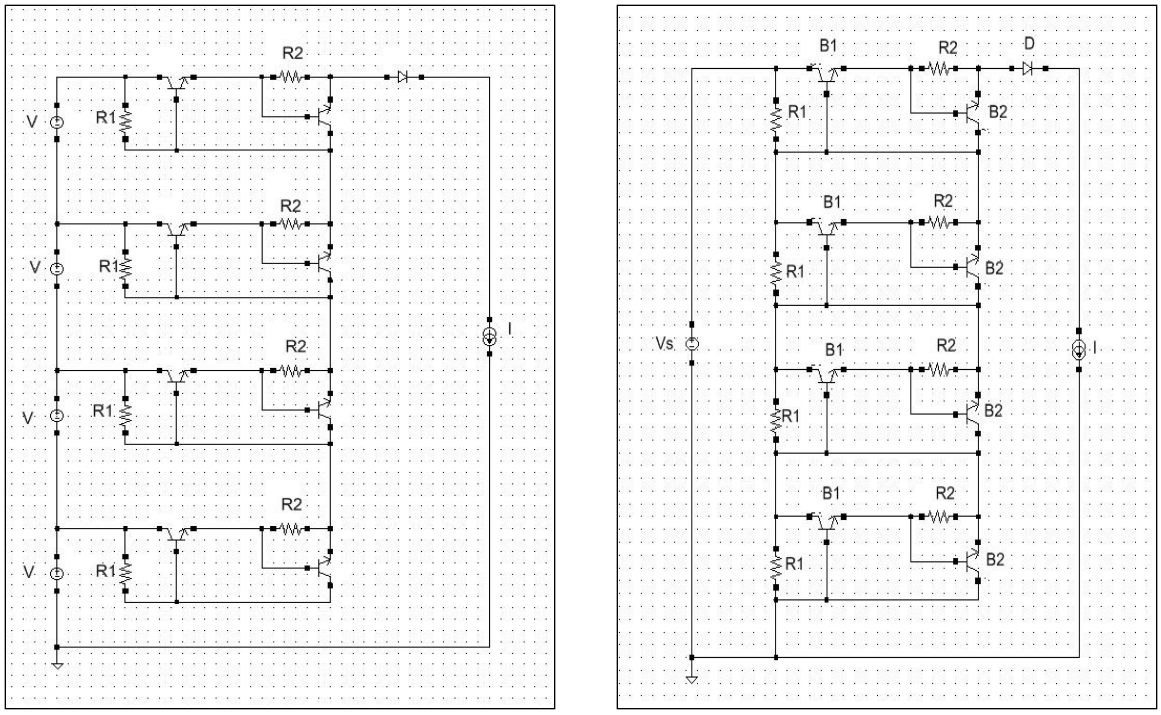


(a) (b)

Figure 3.12: Equivalent circuit of series connected fuel cells in cadence SPICE

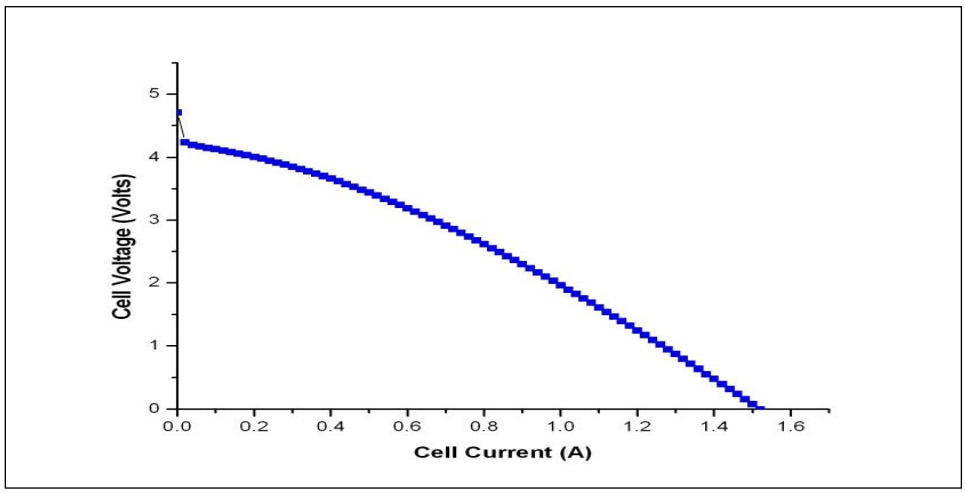


Figure 3.13: V-I curve of series connected fuel cells

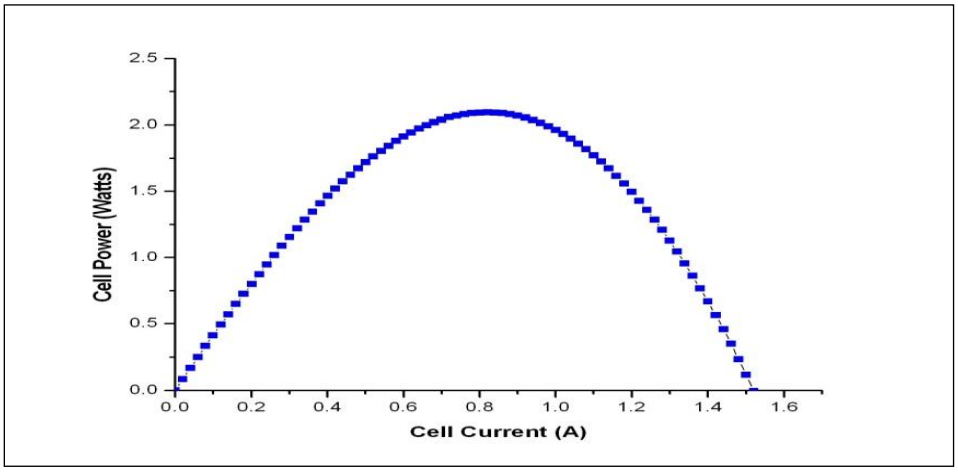


Figure 3.14: P-I curve of series connected fuel cells

### *3.3.2 Parallel Architecture*

Connecting cells in series only boosts the voltage from the cells, wherein if higher currents from the modules are needed as required in distributed applications, cells need to be connected in parallel. Solar cells are connected in parallel combination to obtain the necessary higher currents, whereas to obtain higher current from fuel cells, their area is increased. In spice simulation, cell currents are increased by modifying some model parameters of the circuit elements to have higher fuel stack currents. The effect of fuel cells connected in parallel and their corresponding terminal characteristics are discussed in next section. Equivalent circuit of parallelly connected solar cells and their corresponding I-V and P-V curves in cadence spice are seen in Figures 3.15 and 3.16. The curves show the increase in terminal currents with no increase in voltage.

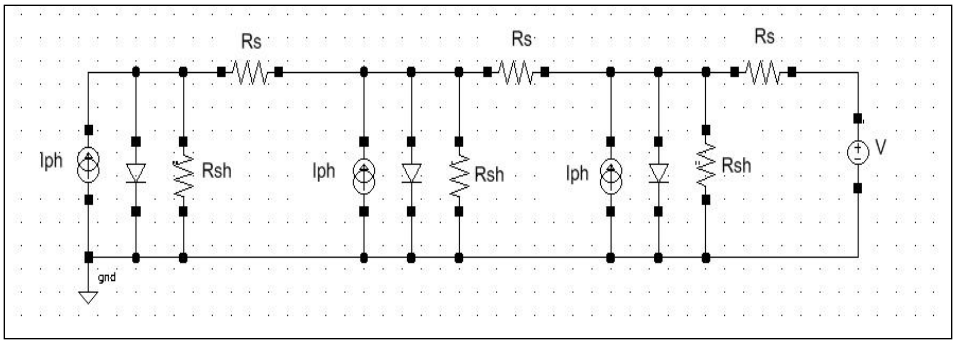


Figure 3.15: Equivalent circuit of parallel connected solar cells in cadence SPICE

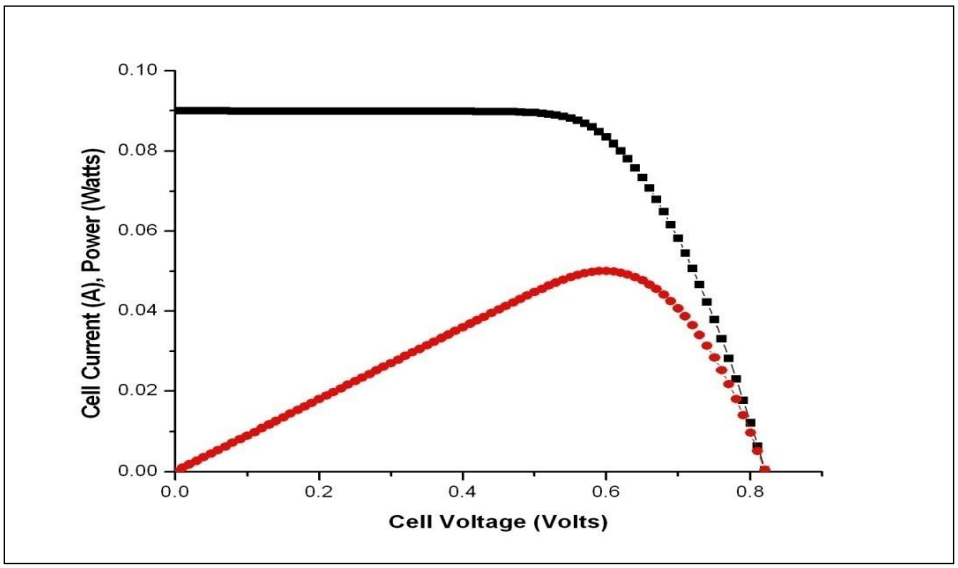


Figure 3.16: V-I and P-I curve of parallel connected solar cells

### *3.3.3 Series-Parallel Architecture*

Series–parallel architechtures of solar cells forming solar module equivalent circuit and their corresponding I-V and P-V curves simulated in cadence spice are demonstrated in Figures 3.18 and 3.19.

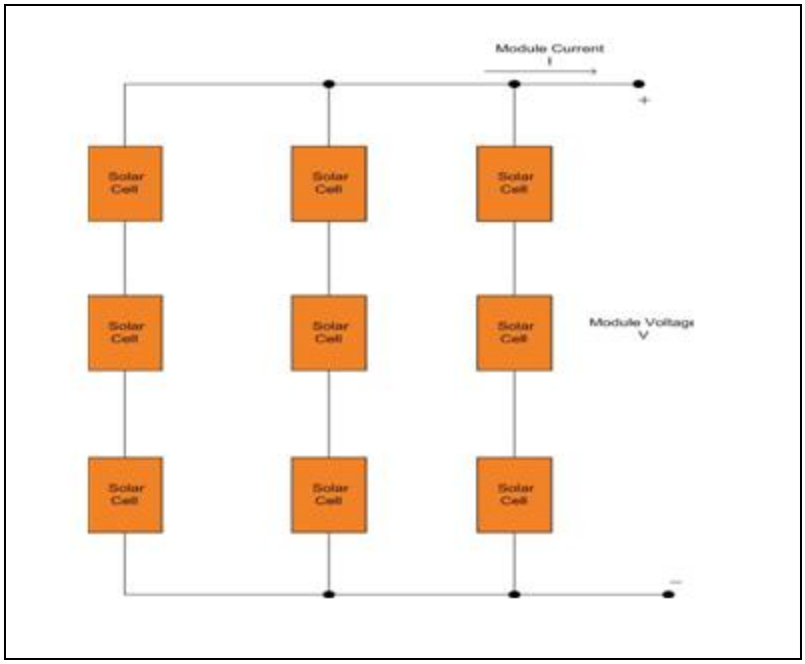


Figure 3.17: Solar cells connected in Series - Parallel architecture

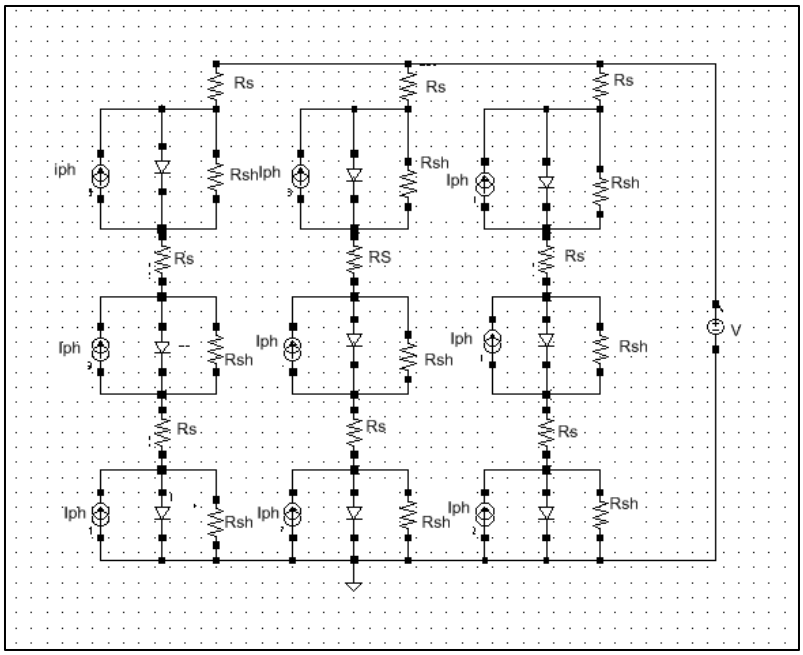


Figure 3.18: Equivalent circuit of solar module in cadence SPICE

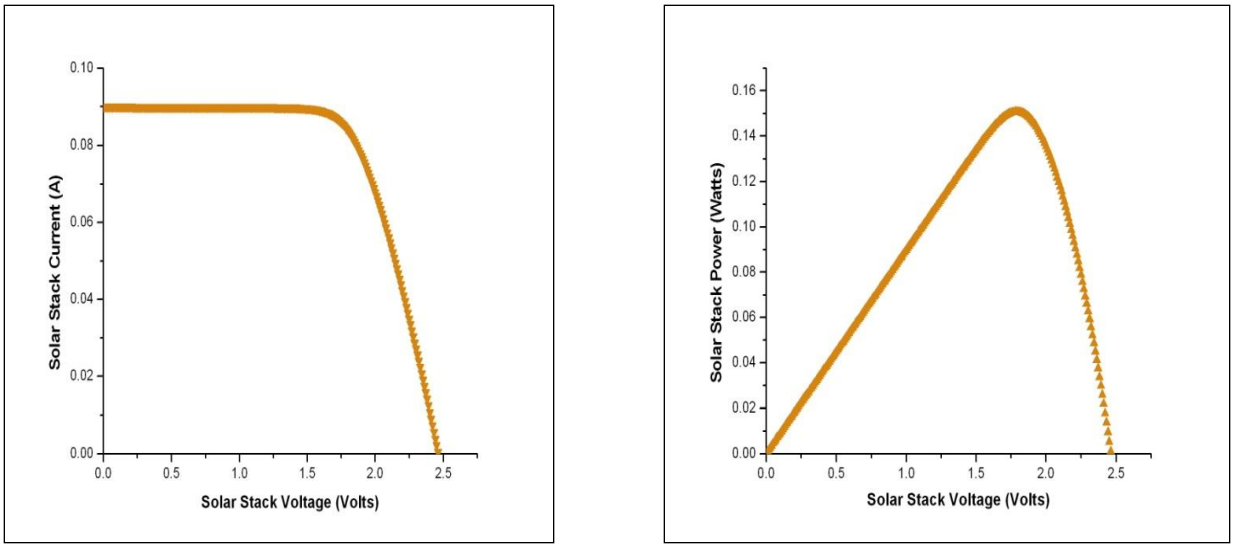


Figure 3.19: I-V and P-V curves of solar module

In Cadence SPICE, solar modules and fuel stack are obtained by altering some of the model parameters of the devices. For solar module, the model parameters of the diode altered were N (diode ideality factor), Rs (series resistance of the diode), Vj (diode junction potential). Values for N differs from single solar cell to modules. N was increased accordingly to match the module terminal curves. Apart from N, values of Rs and Rsh in the circuit also has a significant impact on the shape of the I-V curve and hence need to be carefully chosen to match specific solar cell I-V curve.

Equivalent circuit of fuel cells connected in series to form stack as seen in Figure 3.12 with increased area to obtain higher currents with their corresponding V-I and P-I curves are as in Figures 3.20. However, to model fuel cell stack, parameters from diode model like N (ideality factor), Is (saturation current), Vj (diode junction voltage), IKF ( forward knee currents) were edited to match the polarization curves and from BJT model parameters, Is (saturation current),

IKF ( forward knee currents) are chosen to match V-I curves of fuel stack. Increase in area of the stack is obtained in Cadence simulation package by increasing the curents Is (saturation current), (about 500 times) in the model car of diode and BJT. Other parameters of the models do not have significant effect on the terminal characteristics. In simulation of fuel cell stack, diode used to model activation loss was excluded as this effect was already present from the n-p-n junctions of the BJTs.

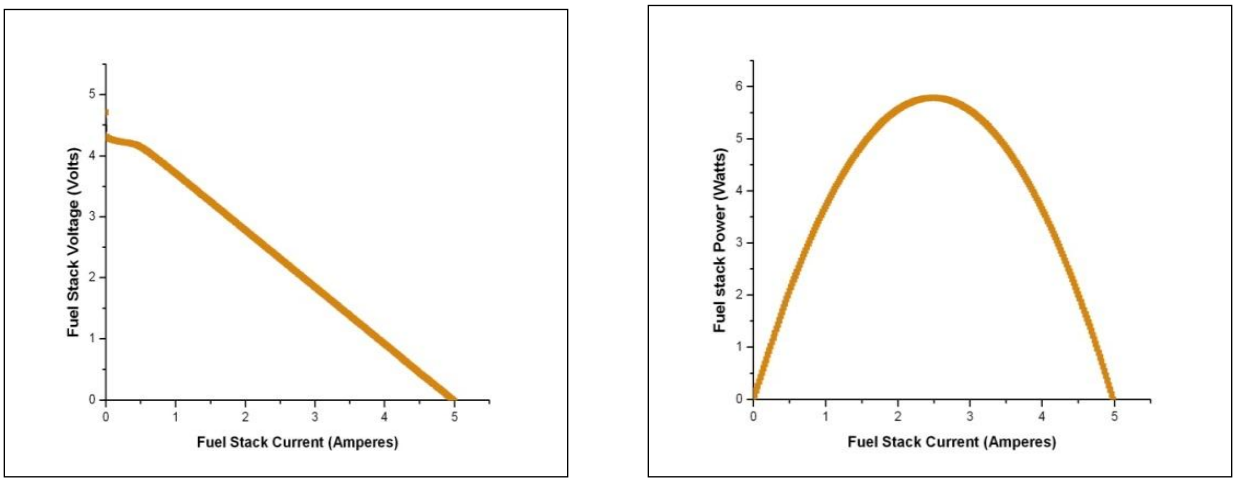


Figure 3.20: V-I and P-I curves of fuel cell stack

Terminal characteristics of both solar module and fuel cell stack are demonstrated here for static modules and not for dynamic modules discussed before, because the polarization curves are obtained with steady state analysis and even if the dynamic components of the circuits are considered in the circuits like capacitors and inductors, they would have no effect on the terminal curves as a capacitor would be an open circuit and inductor short circuit in dc analysis. But, the dynamic models of solar module and fuel cell stack are considered when interfaced with the power converters as their behaviour will be analysed with respect to time.

To summarize the effect of series and parallel connections of solar and fuel cells, the block diagrams shown in Figures 3.21, 3.23 and 3.25 are helpful. Solar modules and fuel cells wired with cells in series thus deliver equivalent module voltage seen in Figures 3.22 and 3.26 which is nothing but sum of individual cell voltage of the module. Whereas, modules wired with cells in parallel deliver equivalent module as in Figure 3.24 which is the sum of individual cell currents of the module.

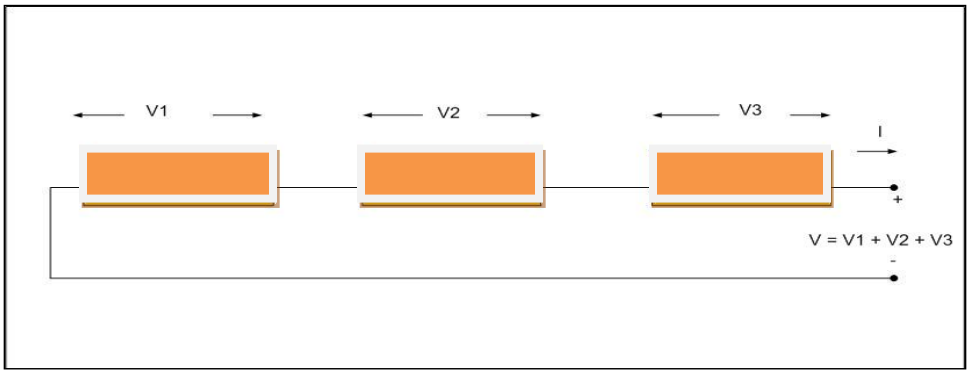


Figure 3.21: Solar cells connected in series

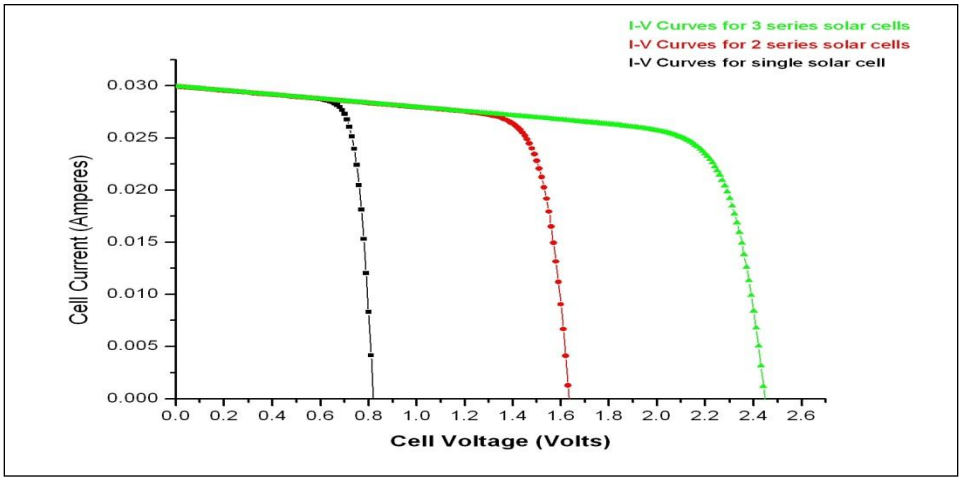


Figure 3.22: I-V curves for series connected solar cells

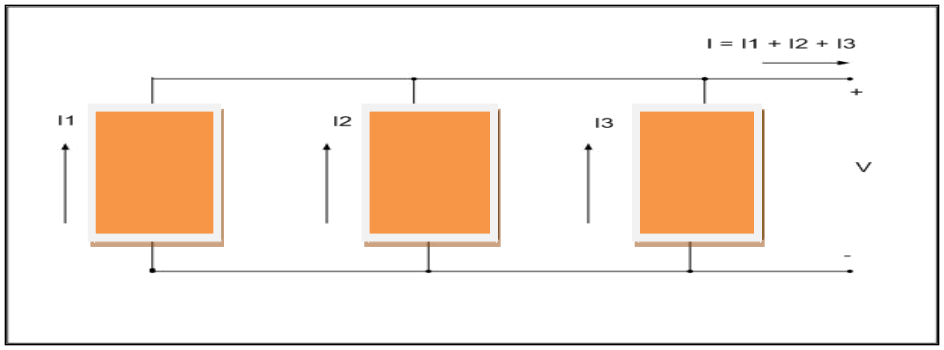


Figure 3.23: Solar cells connected in parallel

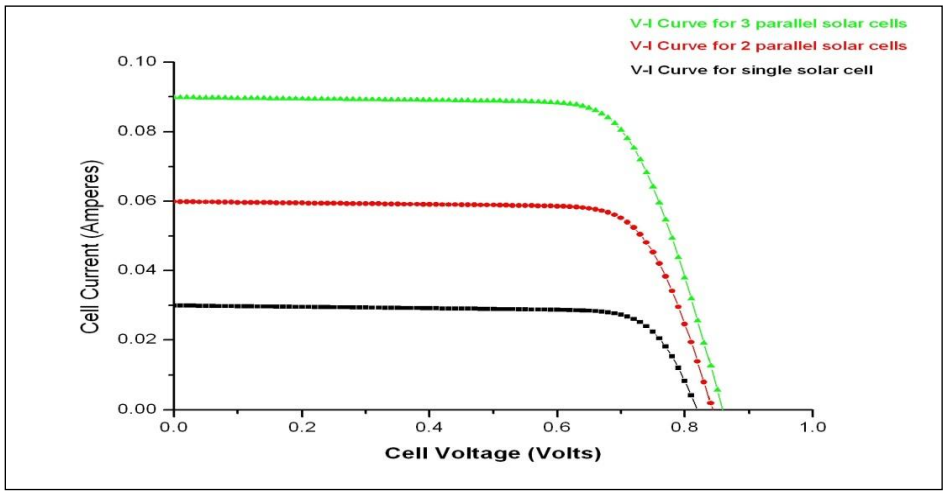


Figure 3.24: I-V curves for parallel connected solar cells

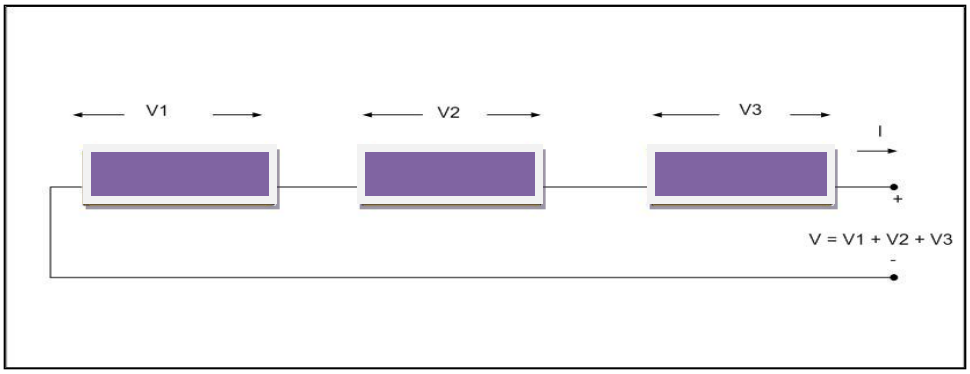


Figure 3.25: Fuel cells connected in series

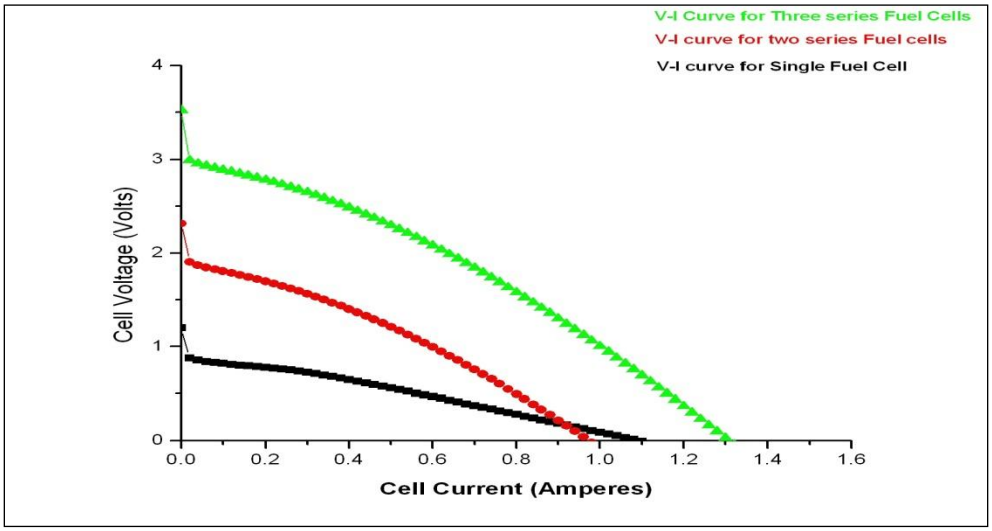


Figure 3.26: V-I curves for series connected fuel cells

## 3.4 Sensitivity Analysis

Solar cells are highly sensitive to parasitic cell resistances. The two main parasitic resistances associated with solar cells are series resistance and shunt resistance. These resistances dissipate power thus degrading solar cell efficiency.

### *3.4.1 Solar cell sensitivity to series resistance*

Series resistances in solar cells, Rs, could be due to: the resistance offered by the cell material to the movement of current through the cell, bond contact resistances between semiconductor and metals, and resistances from metals at the contact. The impact of series resistance on the I-V and P-V curves of a single solar cell is as seen in Figure 3.27 and 3.28, where a linear increase in series resistance degrades the fill factor of the I-V curves which is the measure of maximum power available from the cell. Further, excessively large series resistance could also decrease maximum current available from the cell.

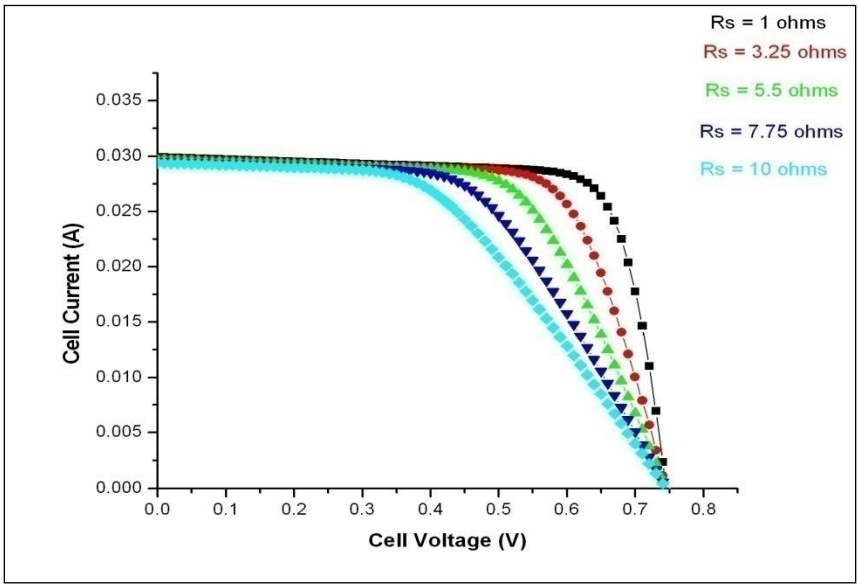


Figure 3.27: Sensitivity of series resistance on solar cell I-V curve

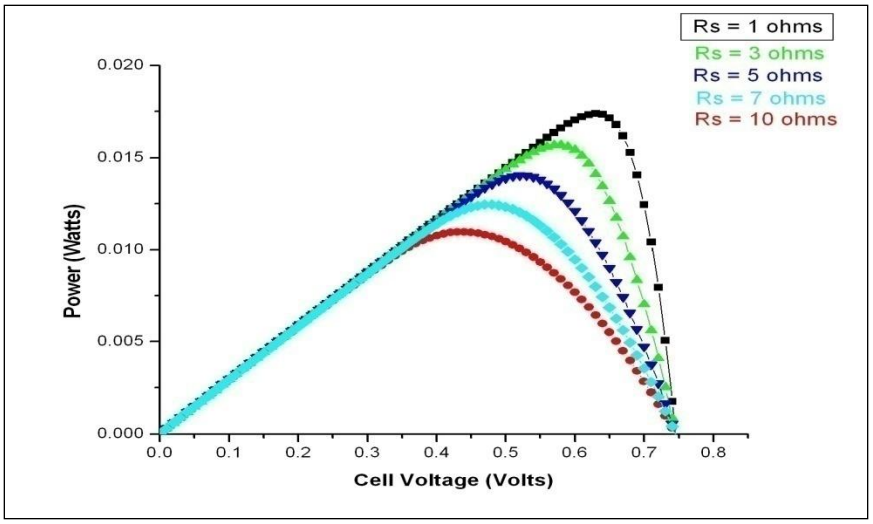


Figure 3.28: Sensitivity of series resistance on solar cell P-V curve

### *3.4.2 Solar cell sensitivity to shunt resistance*

Shunt resistances in solar cell, Rsh, are mostly due to manufacturing defects which have an impact of reducing current flowing through solar cell p-n junctions by providing an alternative leakage path for the cell current to flow. The impact of shunt resistance on the I-V and P-V curves of a single solar cell is as seen in Figure 3.29 and 3.30. The effect of shunt resistance, particularly at lower currents affects the efficiency of the cell to a great extent. Loss of current through shunt resistance reduces available solar cell voltage. Therefore, to extract maximum power from any solar cell, series resistance should be as small as possible and shunt resistance quite large. For a typical solar cell, normally series resistance would be in the order of few ohms and shunt resistance would be few hundreds of ohms.

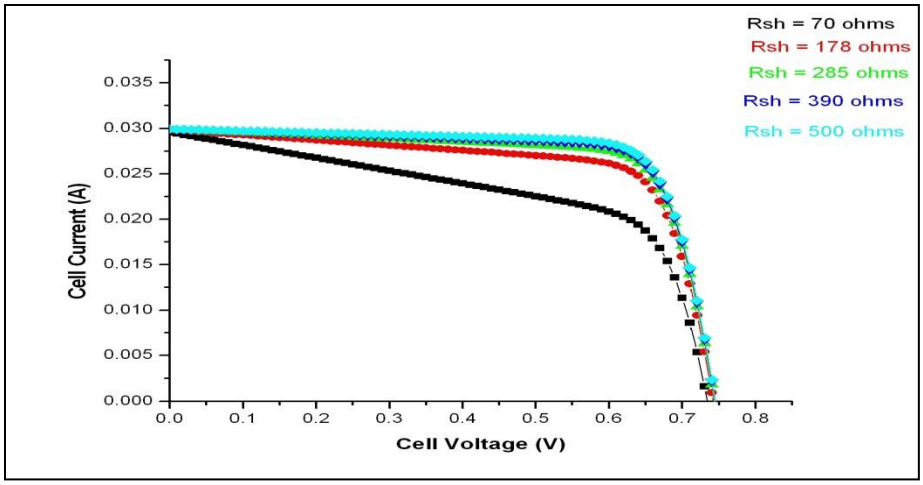


Figure 3.29: Sensitivity of shunt resistance on solar cell I-V curve

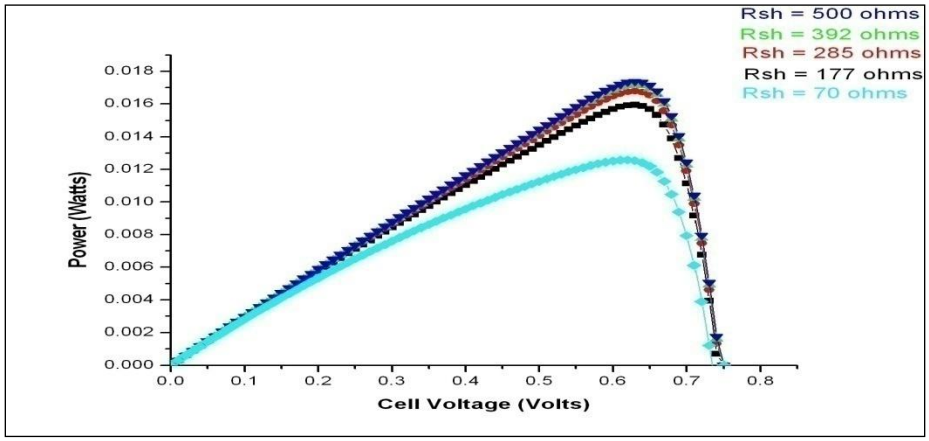


Figure 3.30: Sensitivity of shunt resistance on solar cell P-V curve

### *3.4.3 Solar cell sensitivity to temperature*

Solar cells are very sensitive to operating temperature. For any semiconductor devices, increase in temperature decreases the energy band gap thus affecting their behavior. Temperature effects in solar cells mostly affect solar cell open-circuit voltage. It can be seen in Figures 3.31 and 3.32;

the impact of temperature at 300K to 420K has reduced cell voltage about 1 Volts which could significantly degrade solar cell efficiency.

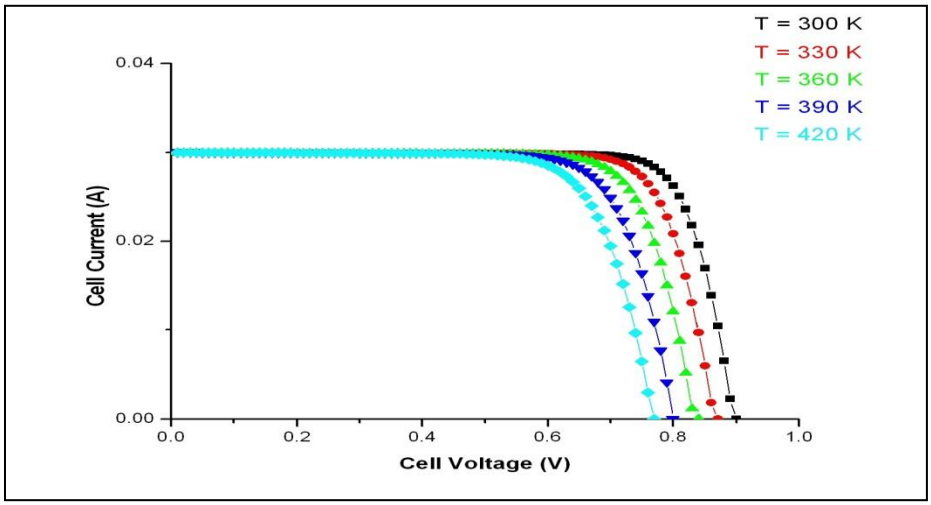


Figure 3.31: Temperature sensitivity on solar cell I-V curve

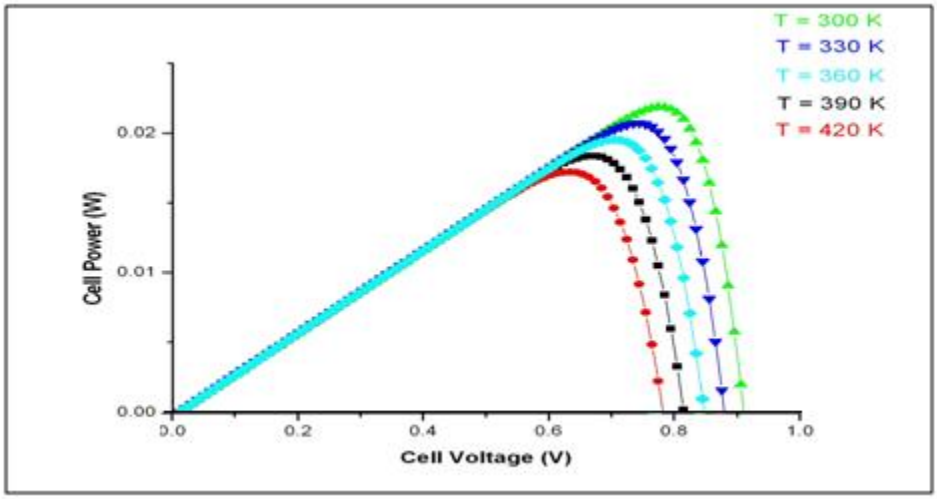


Figure 3.32: Temperature sensitivity on solar cell P-V curve

### *3.4.4 Fuel cell sensitivity to circuit elements*

Fuel cell equivalent circuit as discussed before uses current limiting circuits with two BJTs and resistances R1 and R2. These resistances control the concentration polarization regions. , Resistor R1 effects the slope or rate of change of the voltage in concentration polarization losses which is demonstrated in Figure 3.33. Whereas, resistor R2 as a current sensor, decides the point at which concentration losses start, this effect is demonstated in cadence spice with different values for R2 resulting in corresponding changes in offset point of concentration polarization as seen in Figure 3.34.

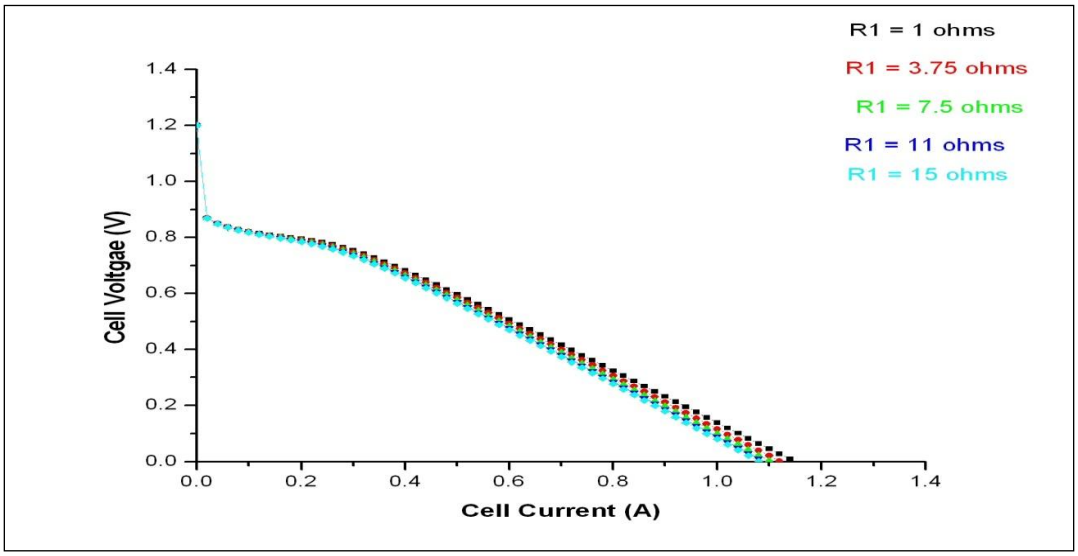


Figure 3.33: Fuel cell V-I curve sensitivity to circuit element R1

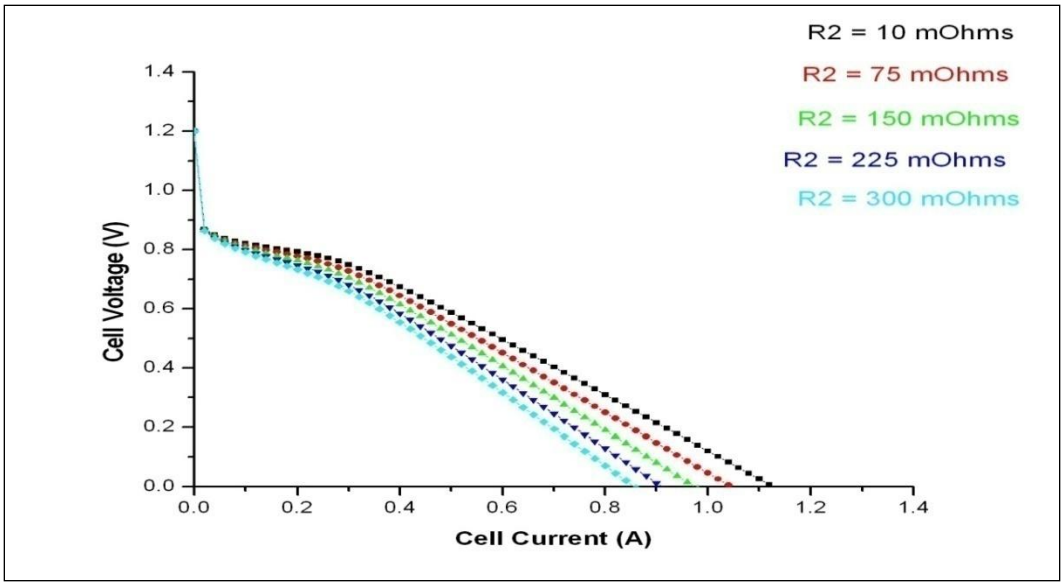


Figure 3.34: Fuel cell V-I curve sensitivity to circuit element R2

### *3.4.5 Fuel cell sensitivity to temperature*

Like solar cells, fuel cell terminal characteristics are also dependent on operating temperature. V-I and P-I curves of single fuel cell operated at varying temperatures are shown in Figures 3.35 and 3.36. At lower temperature, cell voltage is far lower than the ideal fuel cell voltage, with a significant activation polarization losses. As the temperature increases, fuel cell terminal voltage tends to approach ideal cell potential without possessing activation polarization regions. For fuel cells increase in operating temperature improves their terminal voltage whereas for solar cells increase in operating temperatures degrades their terminal voltage.

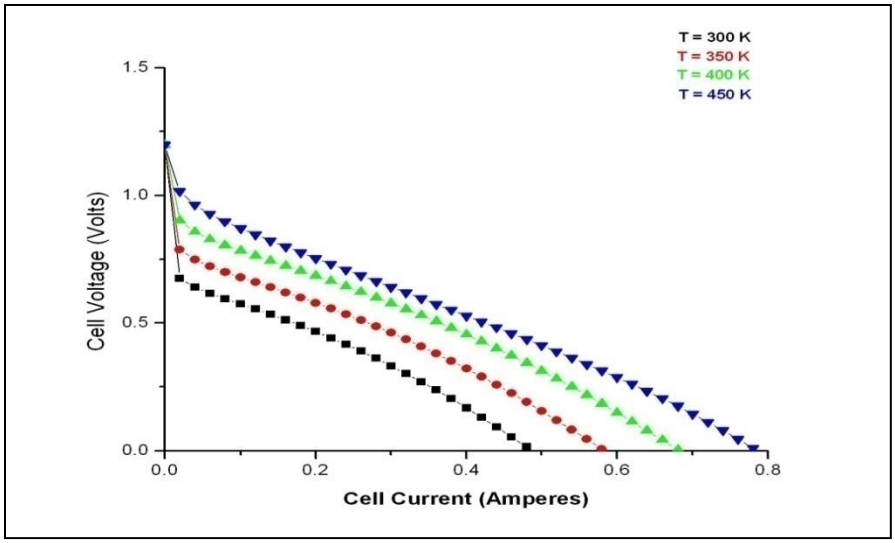


Figure 3.35: Temperature sensitivity on fuel cell V-I curves

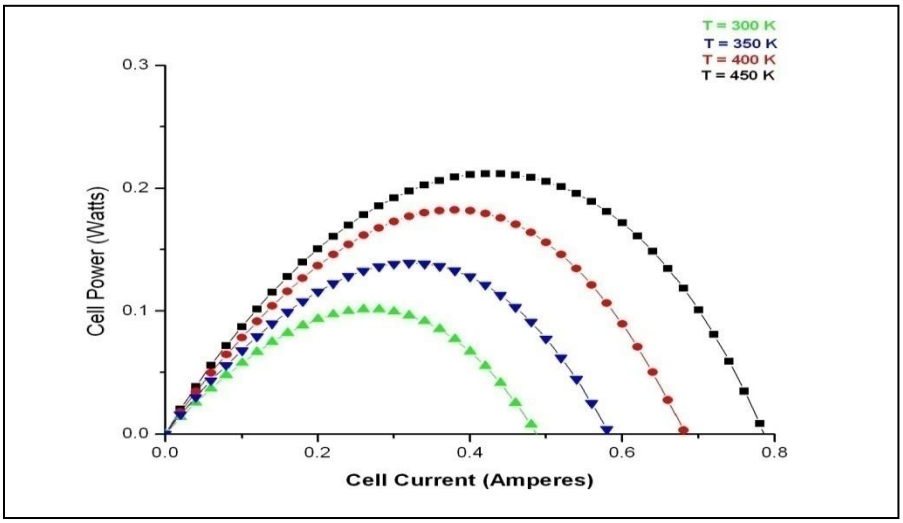


Figure 3.36: Temperature sensitivity on fuel cell P-I curves

### *3.4.6 Bypass diodes for Solar shading effects*

Shading effects in solar modules have severe impact on efficiency of modules. When a string in solar module is partially shaded, the string cannot generate photocurrent, then the parasitic resistances mainly shunt resistance Rsh being large enough acts as load thus drawing most of the current from other functional cells. This could further generate hot spots, badly damaging the module. To solve these shading problems, bypass diodes are connected with the modules in parallel to the solar cells to bypass the current from shaded cells. These bypass diodes show no effect if the associated solar string or cells are functional since they will be cut-off. But when the strings are shaded which is a very common occuring, these bypass diodes turn on to bypass the currents of other functional cells through. It would be impractical to add bypass diodes to each solar cell of the module, so normally atleast one bypass diode is included for a string or a module to alleviate the affects of shading. In cadence simulation, the affects of shading on solar I-V curve is demonstrated with an array of 4 series cells wired in series seen in Figure 3.38. One of the cells is made partially shaded and the corresponding effect on string I-V and P-V curves is shown in Figure 3.39 and 3.40. It is clear from the curves that the bypass diodes provide an alternative path for the module currents from the lossy shaded cells.

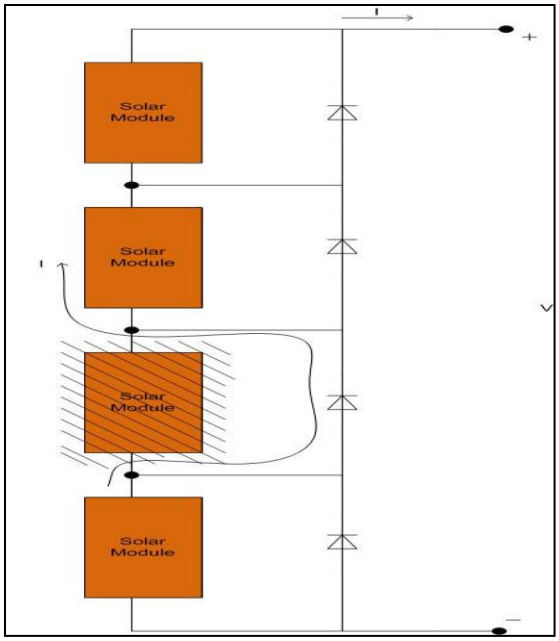


Figure 3.37: Effect of Bypass diodes for series connected solar modules

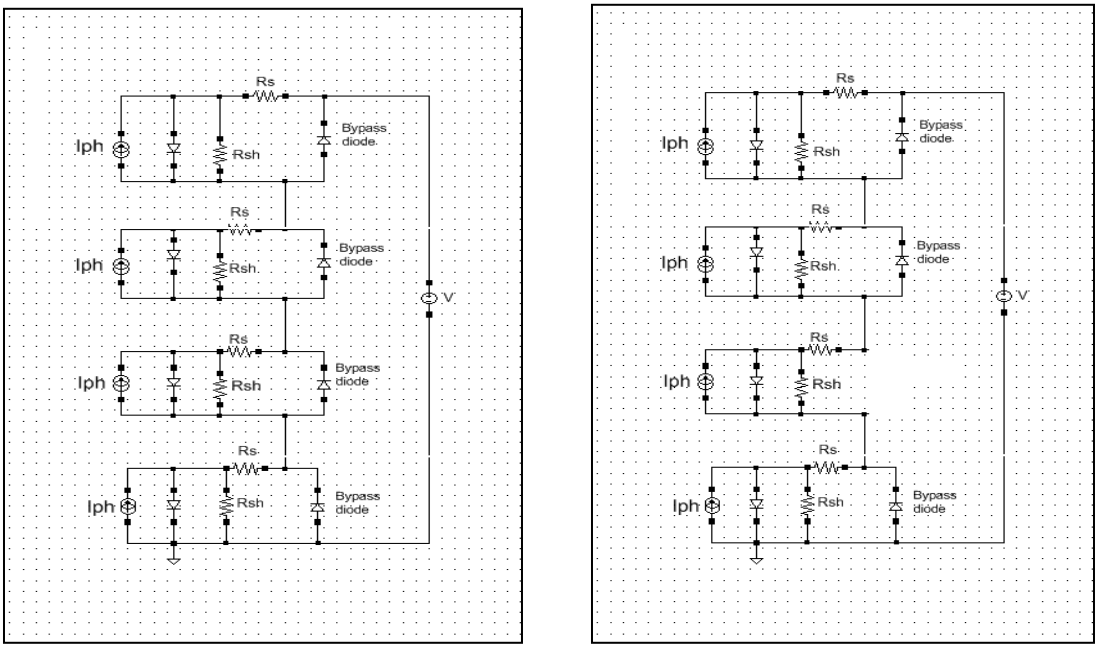


Figure 3.38: Equivalent circuits of series wired solar cells with and without bypass diodes

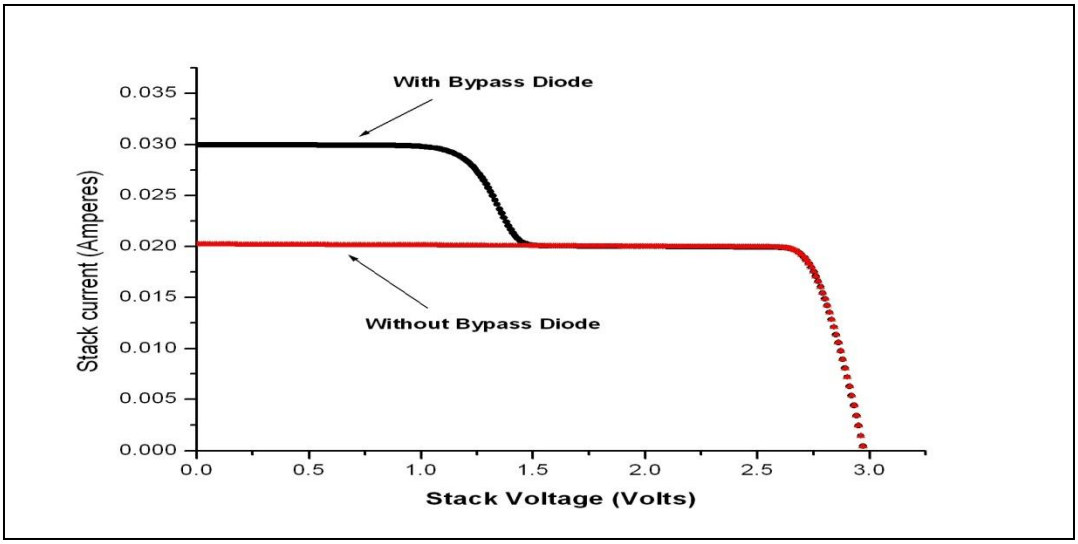


Figure 3.39: Effect of bypass diodes on solar I-V curve

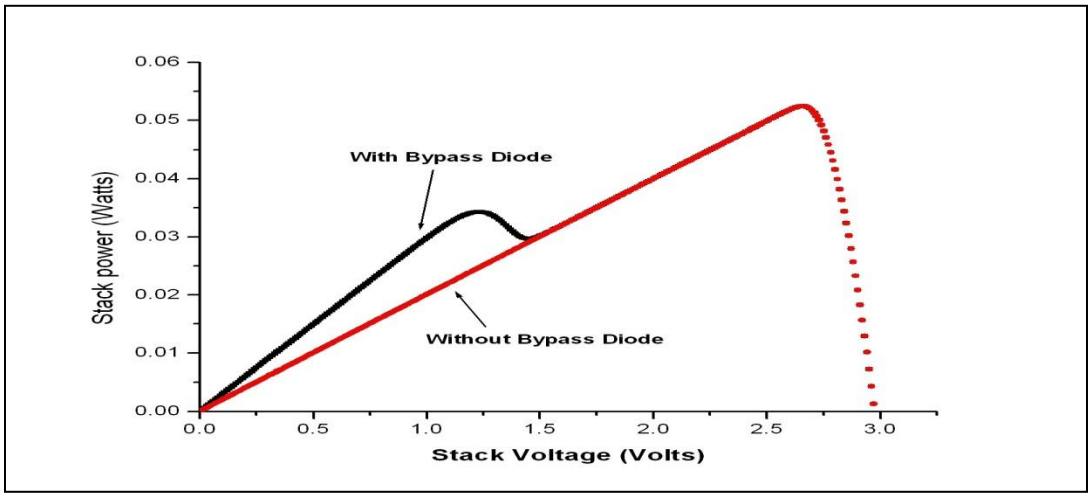


Figure 3. 40: Effect of bypass diodes on solar P-V curve

### *3.4.7 Blocking diodes for Solar and Fuel cells*

Bypass diodes are used in series strings of solar modules to bypass the currents through them from other functional cells. Consequently, when a module consists of cells wired in parallel, similar shading problems are seen. This is where blocking diodes are used to again prevent currents from a functional solar cell to get into a shaded or lossy cell. Blocking diodes are included at each end of modules with solar strings wired in parallel as seen in Figure 3.41 (a) so that if there is shading on any of the string , the string can be isolated from other strings through blocking diodes to prevent significant degradation in module performance. Fuel cells cannot accept reverse currents and thus to block and absorb any reverse currents from flowing into the fuel stack, blocking diodes and a capacitor are incarporated with them as seen in Figure 3.41 (b).

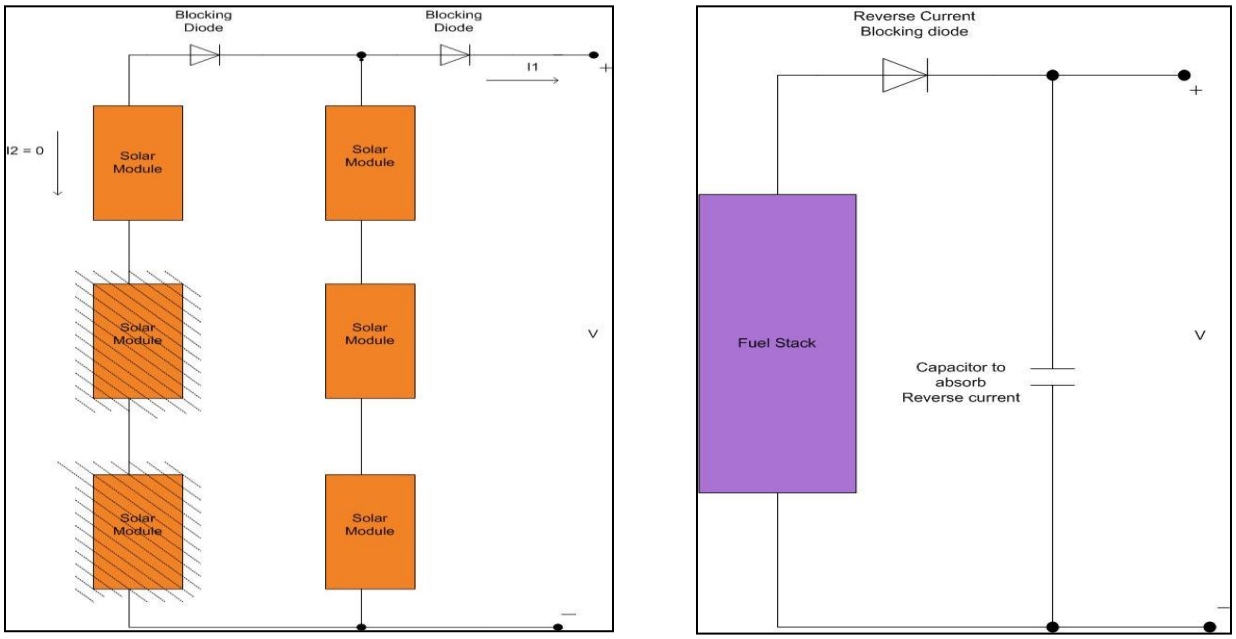


(a) (b)

Figure 3.41: Blocking diodes for solar module and fuel cell stack

# CHAPTER 4 POWER CONDITIONING CIRCUITS

Power electronics interface for both PV cell based and Fuel cell based systems comprise dc-dc converters and inverters to boost, regulate and convert to the desired form and level for use at the utility. Several power converter topologies for renewable energy systems have been studied and developed over the past decade. In this study, specific designs of power converters for Solar and Fuel cell based systems are adopted depending on performance and requirements.

## 4.1 DC-DC Converter for Solar Module

### *4.1.1 Isolated full bridge dc-dc converter for solar cell power conditioning*

For solar energy systems, a boost-derived full bridge PWM dc-dc converter with a diode rectifier at the output side is adopted for its many advantages over other topologies like, it features reduced voltage and current stresses on the switching devices, unlike half-bridge converters it do not posses center-tapped transformer leading to power losses and bulky circuitry, it is best suited for high power operations which in turn reduces the size and thus the cost of the magnetic components in the circuit , and is well suited topology to be operated in zero-voltage switching to reduce switching power losses at higher frequencies.

The converter principle of operation follows as; diagonal pairs of switches are simultaneously turned on with duty cycle greater than 50% for each switch causing two time intervals where all

the switches are turned on reducing the rms current of the inductor L. Four different modes of operation are possible, in mode 1, all the switches are turned on and the inductor current is equally divided between switches in each leg. In mode 2, S2 and S4 are turned off while S1 and S3 remain on, which forces inductor current to flow through the primary winding Lp, and through the diagonal diode pairs D1 and D3 and then to the load. In mode 3, all the switches are in on state having the same effect as in mode 1. In mode 4, the switch pairs S1 and S3 are turned off and switches S2 and S4 remain on now forcing the inductor current to flow through the primary winding, then through the rectifier diode pairs D2 and D4 and then to the load. The schematic of the boost derived full bridge dc-dc converter simulated in cadence spice is as seen in Figure 4.1, in which S1, S2, S3 and S4 are the corresponding control signals applied to the MOSFETs M1, M2, M3 and M4 respectively. The converter switching control signals, primary and secondary winding voltages and the converter input and output voltage are as shown in Figures 4.2, 4.3 and 4.4.

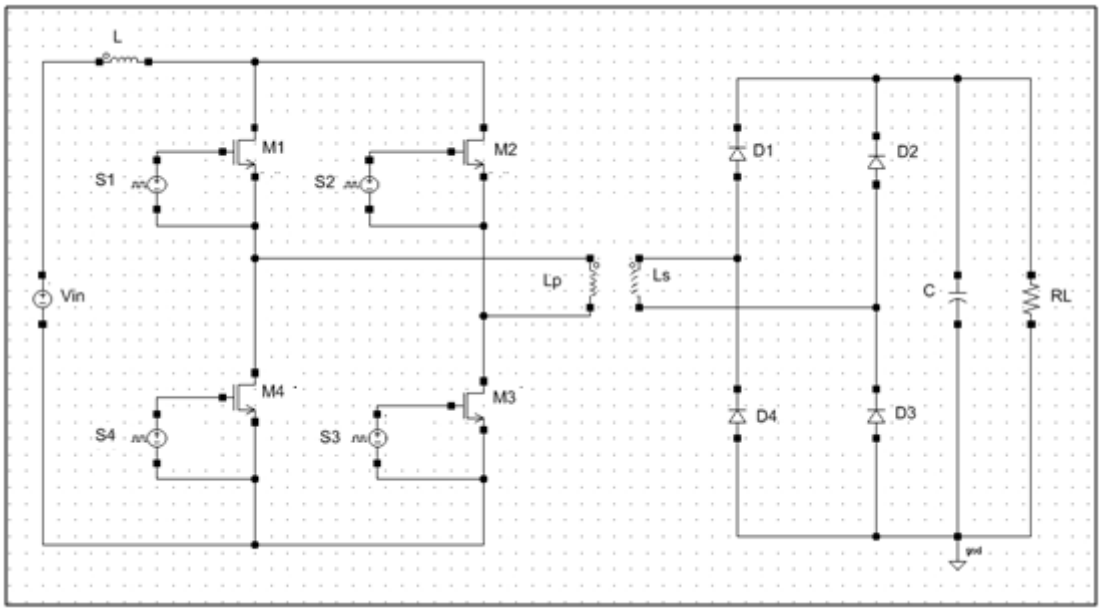


Figure 4.1: Equivalent circuit of boost derived full bridge dc-dc converter

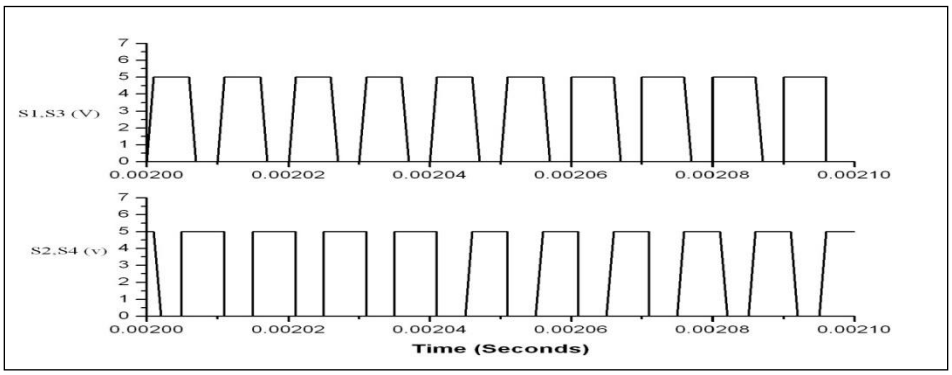


Figure 4.2: Switching control signals of the full bridge dc-dc converter

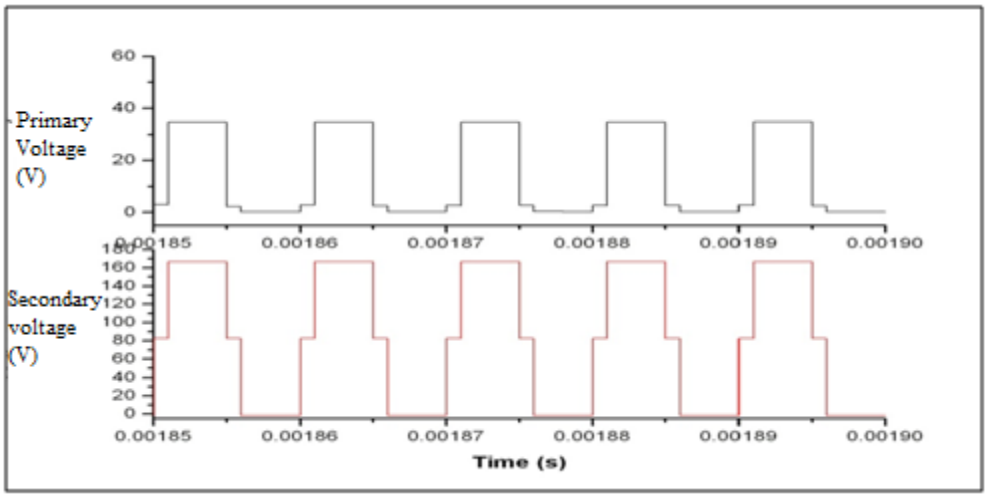


Figure 4.3: Primary and secondary winding voltages of the full bridge dc-dc converter

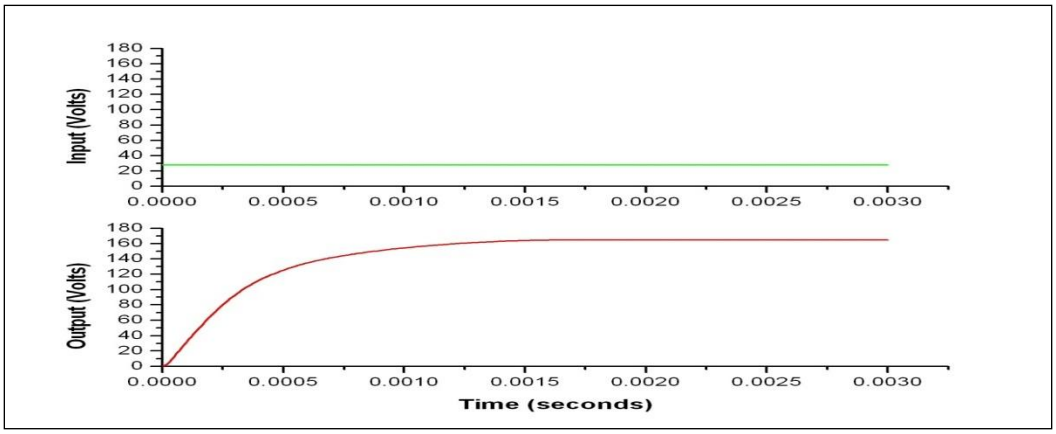


Figure 4.4: Input and output waveforms of full bridge dc-dc converter

## 4.2 DC-DC Converter for Fuel Stack

### *4.2.1 Isolated wide input range dc-dc converter for fuel cells power conditioning*

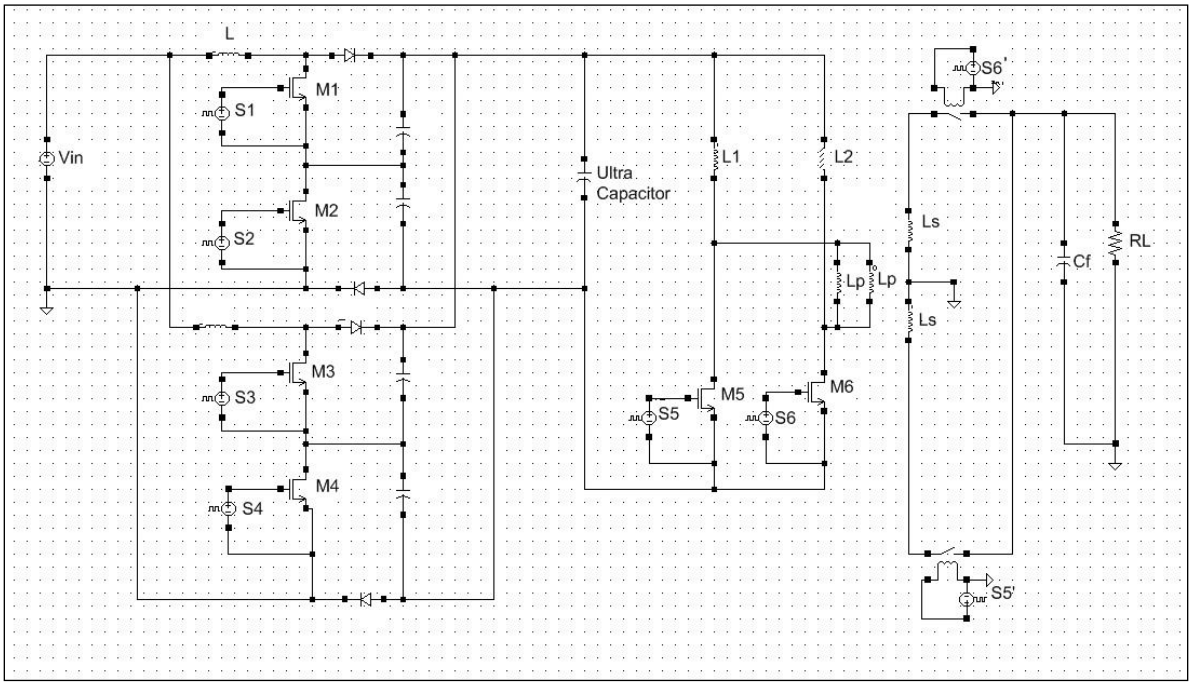


Figure 4.5: Equivalent circuit of wide input range dc-dc converter

Fuel Cell dynamic response is very slow and combined with the terminal voltage losses at different current densities as explained before has recognized the need for more effective and robust power control systems. Unlike solar based energy systems, fuel Cell systems need an alternate source of energy to provide energy during sudden load demands. Ultra-capacitors are a potential candidate for energy storage. Ultra-capacitors have high efficiency, excellent life cycle and can operate at wide range of temperatures [11]. For fuel cells, a dc-dc converter developed in [5] as seen in Figure 4.5 is adopted here for power conversion. The converter consists of two stages for boosting, the first stage comprises of two, current fed boost converter connected in

parallel to have smaller inductor size to achieve low ripple and also to reduce the voltage and current ratings of the power devices [5].

Initial boosting and regulation of the fuel cell module voltage is achieved through the first boosting stage where a pre-regulation of the voltage to 80 volts is attained. In the simulations here, a regulation of the fuel stack voltage in the wide range from 40 volts to 60 volts was achieved to about 70 volts, because of the probable switching and conduction losses through the circuit elements. The first boosting stage was operated at frequency 100K Hz with duty cycle just less than 50% for the power switches. With this configuration, efficiency of about 97% for the first boost converter was achieved. However, the efficiency of the converter significantly improved with the duty cycle approaching 50%. To supply energy during sudden load demands, an ultra capacitor is adopted following the first boosting stage. Ultra capacitor temporarily sustains the voltage of the first boosting converter, if the module is incapable to satisfy power needed by the load. The control signals and corresponding inductor currents and the pre-regulated voltage of the first boosting stage are as seen in Figures 4.6 and 4.7.

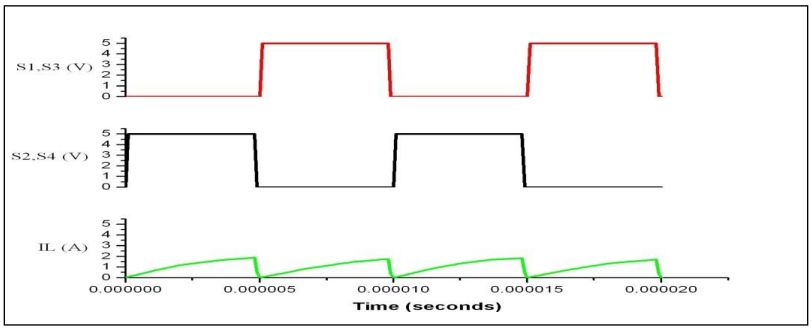


Figure 4.6: Control signals and corresponding inductor current of primary boosting stage of wide input range dc-dc converter

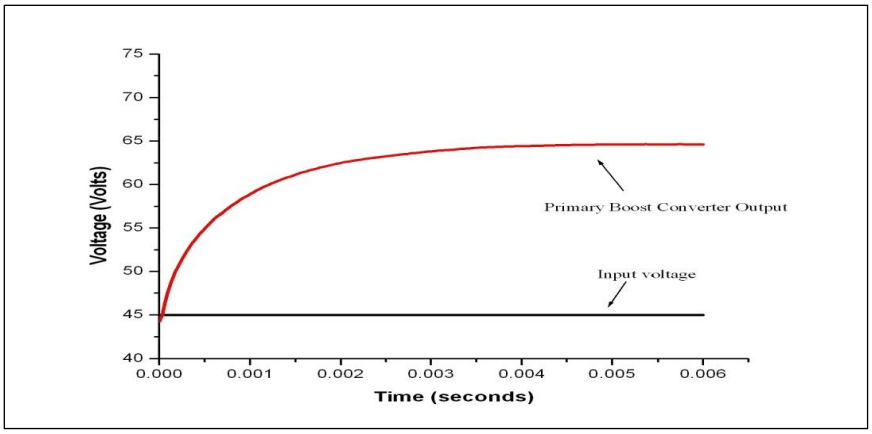


Figure 4.7: Input and output voltage waveforms of first boosting stage of wide input range dc-dc converter

The second and final stage boosting is obtained with an isolated two inductor boost converter consisting of two coupled inductors L1 and L2 to provide certain voltage boosting with switches S5 and S6. At the output of the second boosting converter, galvanic isolation with turn ratios of 1:3 for primary and secondary windings provides additional signal boost, and rectification of the signal is obtained by synchronous switches S5' and S6' at the load end to provide a stable high side dc voltage. Use of synchronous switches instead of diodes help obtain higher efficiencies as MOSFET turn-on voltage losses are far lower compared to that of diodes. The second boost converter is operated at 20 KHz frequencies achieving converter efficiency of about 94%. Synchronized control signals and the output high side dc voltage of the converter is as seen in Figures 4.8, 4.9 and 4.10.

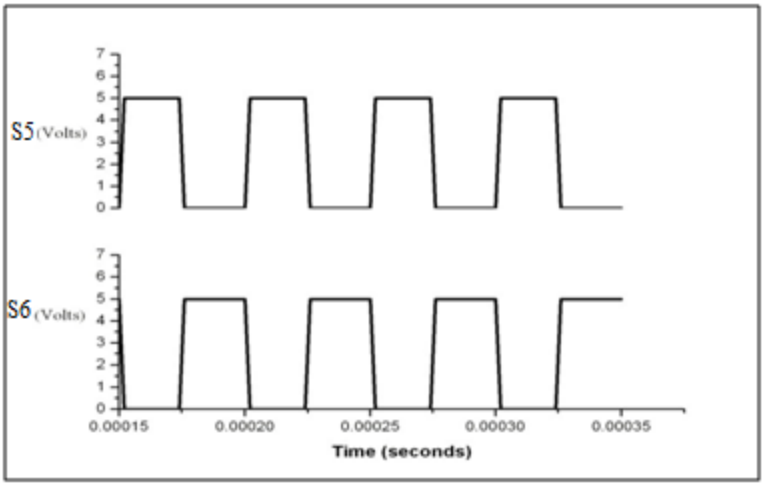


Figure 4.8: Control signals of two inductor boosting stage of wide input range dc-dc converter

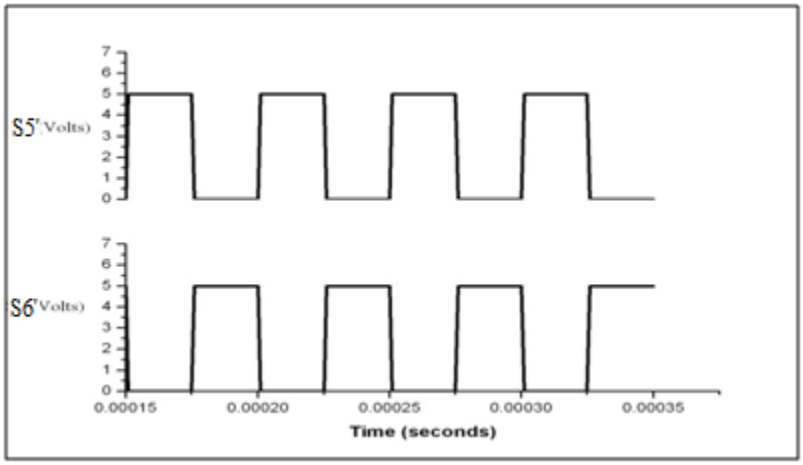


Figure 4.9: Synchronized control signals of two inductor boosting stage of wide input range dc-dc converter

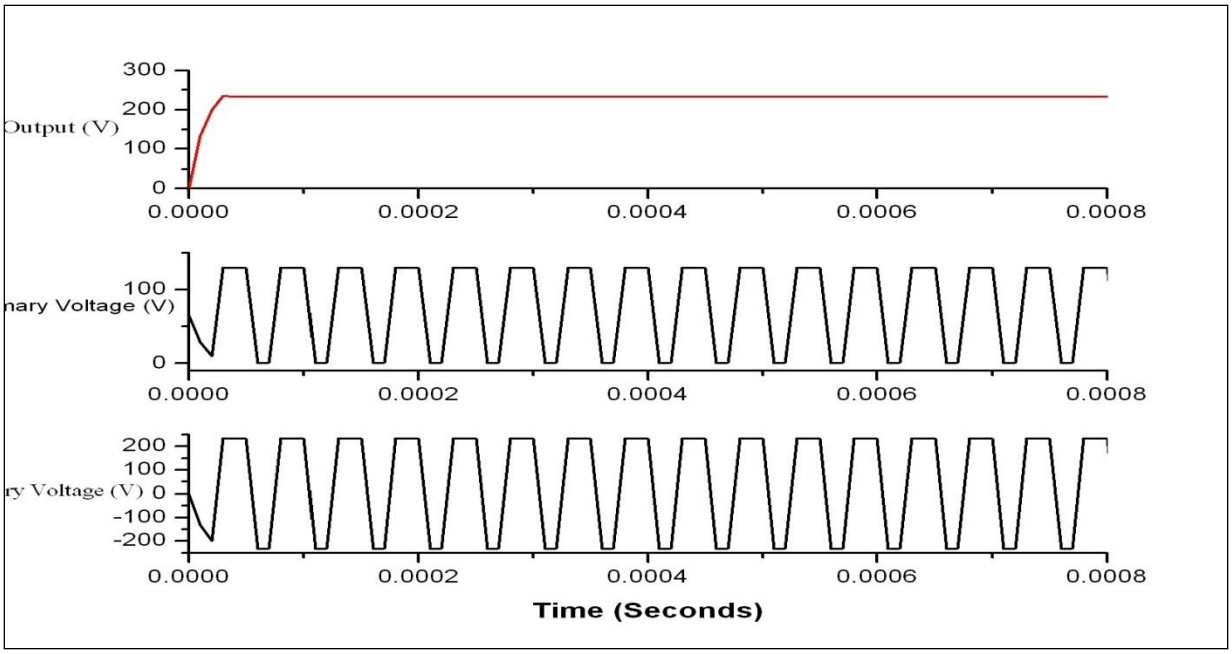


Figure 4.10: Primary, secondary winding and output voltages of two inductor boosting stage of wide input range dc-dc converter

## 4.3 Inverters

### *4.3.1 Three Wire PWM Inverter*

The high side dc voltage from the dc-dc converter need to be converter to the desired ac voltage for applications. A three-wire full bridge PWM inverter as shown in Figure 4.11 is studied here to obtain both single and three phase voltage outputs. Line-to-line output voltages are obtained with switching sequence for switches S1-S6 as seen in Figure 4.12. At any given point of time, only one switch is turned on, to prevent short circuit between the switch legs. The inverter is connected to the load through LC filters. The switching sequence produces a nearly sinusoidal volatage with inverter output voltages and currents having 120 degree phase shifts. The inverter

can be worked to obtain both single and three phase output voltages. However, for commercial power application, generation of three phase voltages are desired. Single and three phase inverter output voltages and currents are shown in Figures 4.13 and 4.14 .

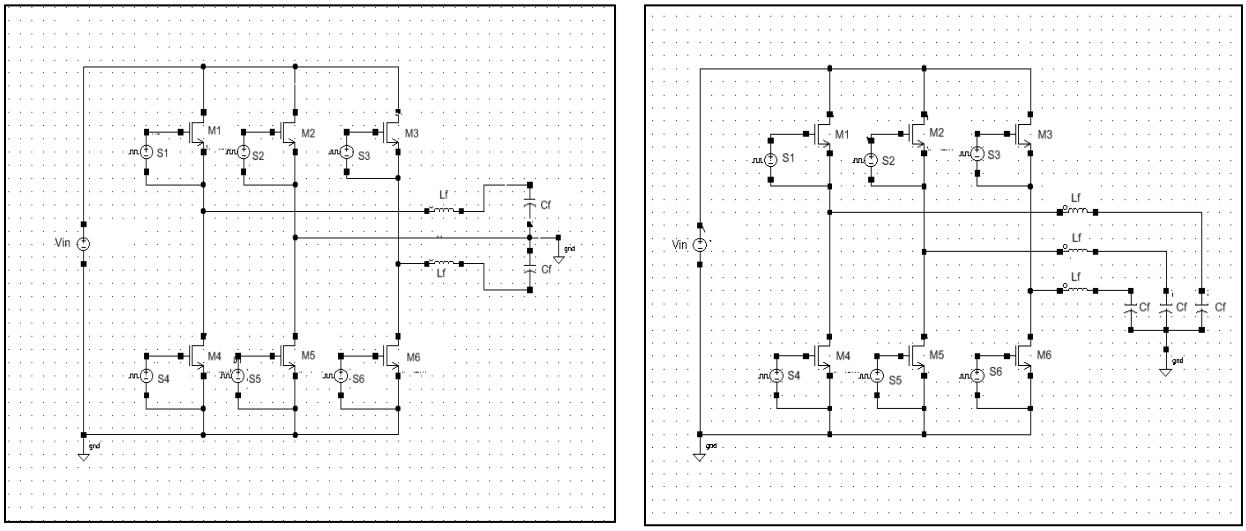


Figure 4.11: Single-phase and three-phase three wire PWM inverter circuits

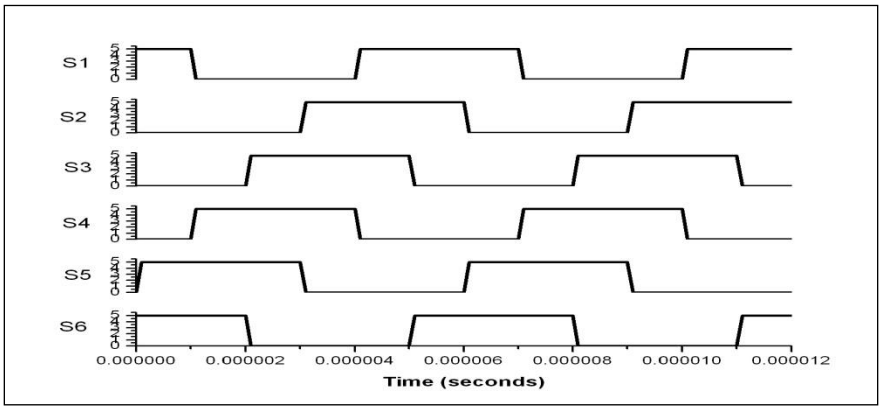


Figure 4.12: Switching control signals of three wire PWM inverter

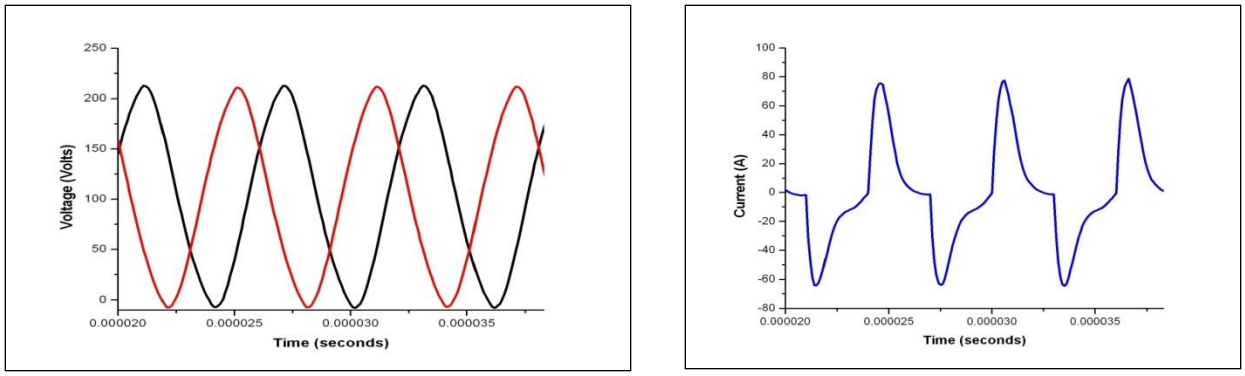


Figure 4.13: Single phase PWM inverter output voltage and filter inductor current

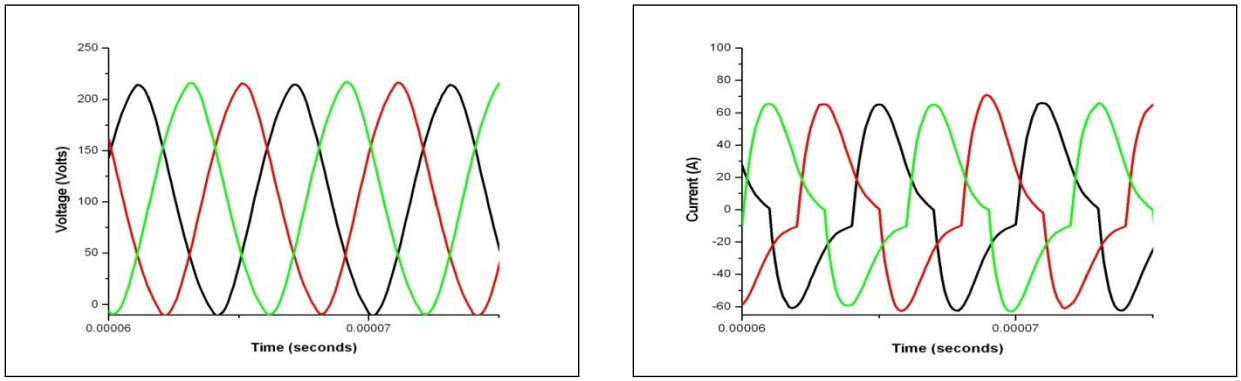


Figure 4.14: Three-phase PWM inverter output voltage and filter inductor current

# CHAPTER 5 RESULTS AND CONCLUSIONS

## 5.1 Results

Dynamic responses of Solar and fuel modules integrated to power converters developed in the previous chapters are discussed here. Modules show slow transient response with sudden dip in their initial terminal voltage. Response of Solar and Fuel cell module when subjected to a step change in the load current is investigated and behavior of ultra capacitor associated with the wide input range dc-dc converter to sudden increase in load demands and step increase in load currents are analyzed.

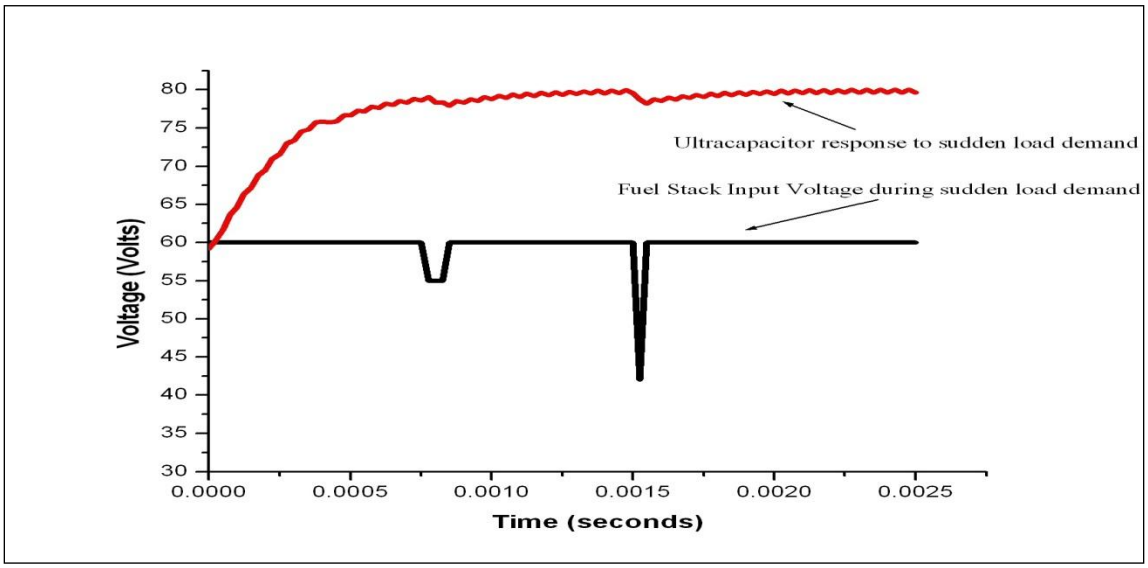


Figure 5.1: Fuel cell input voltage response to sudden load demand and corresponding ultra capacitor voltage

Sudden increase in load demands degrades available fuel cell terminal voltage as fuel cells cannot replenish needed fuel and oxidant in time to supply to the load. Thus when more power is needed than available from the input, module output power degrades. Normally response time of fuel cells to respond to load demands is in seconds. Hence, ultra capacitors or batteries are incorporated in the systems to supply energy during sudden increase in load demands. Input voltage response to sudden increase in load demand and corresponding ultra capacitor voltage is as shown in Figure 5.1. The graph shown is simulated with ideal dc voltage source as input to the dc-dc converter. Voltage across the ultra capacitor slightly dips from 77 volts to 75 volts and recovers back when there is a huge degradation in the input voltage from 65 volts to 45 volts. UC thus acts as a battery supplying power during load demands. UC however supplies power only for a temporary time period allowing fuel cells to recover their voltage. A battery bank or UC bank needs to be incorporated in the system if more power for longer time is needed.

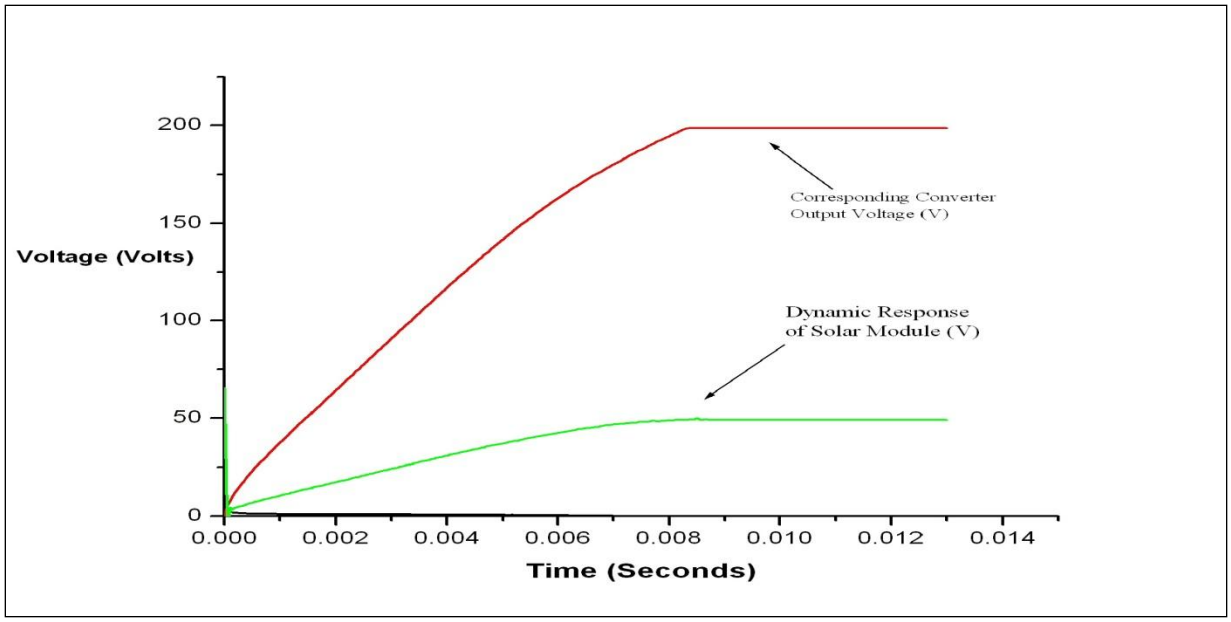


Figure 5.2: Dynamic response of solar module when integrated with Full Bridge dc-dc converter

Transient response of solar dynamic module when integrated to full bridge dc-dc converter is as shown in Figure.5.2. It is seen that the module terminal voltage dips to a large extent and then slowly recovers to reach steady state. This slow initial response is due to the time dependent parameters associated with the solar module like series and shunt capacitances. Since the module response is slow, the corresponding dc-dc converter shows sluggish output response.

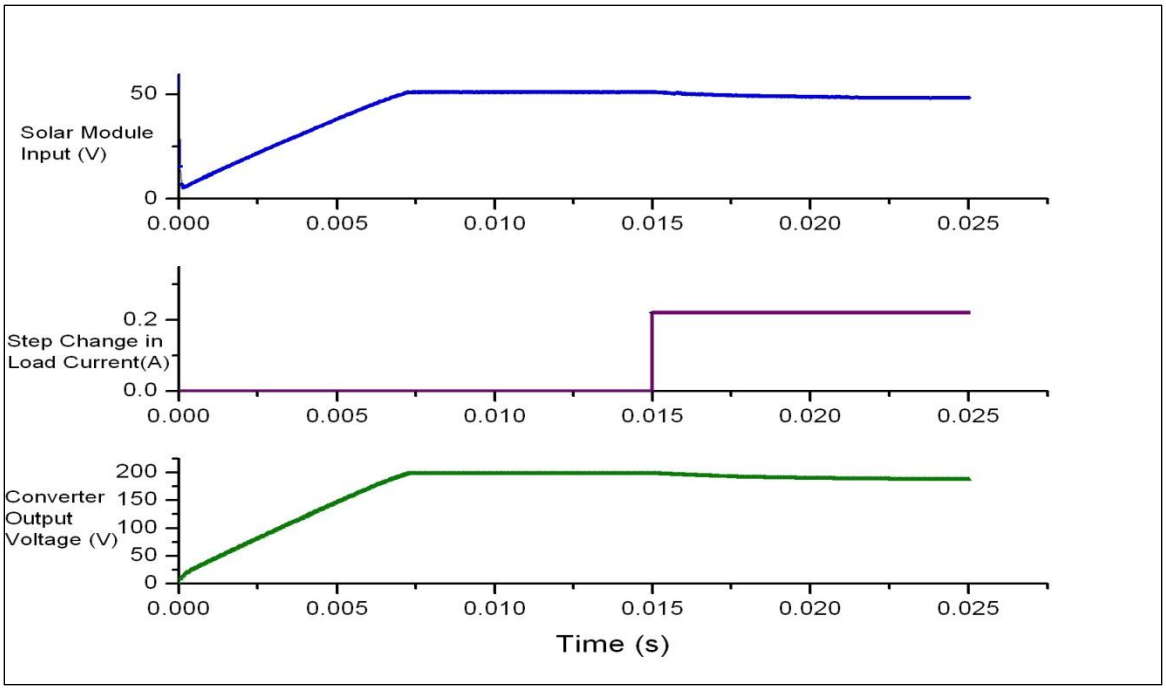


Figure 5.3: Dynamic response of solar module output voltage and corresponding Full Bridge dc-dc converter voltage to a step increase in load currents

Dynamic response of solar module output voltage and corresponding full bridge dc-dc converter voltage to a step increase in load current is as seen in Figure 5.3. Here in simulations, solar module is not provided with any auxiliary storage systems to supply power during high power demands, so a step increase in load currents show degradation of the module output power and corresponding converter output.

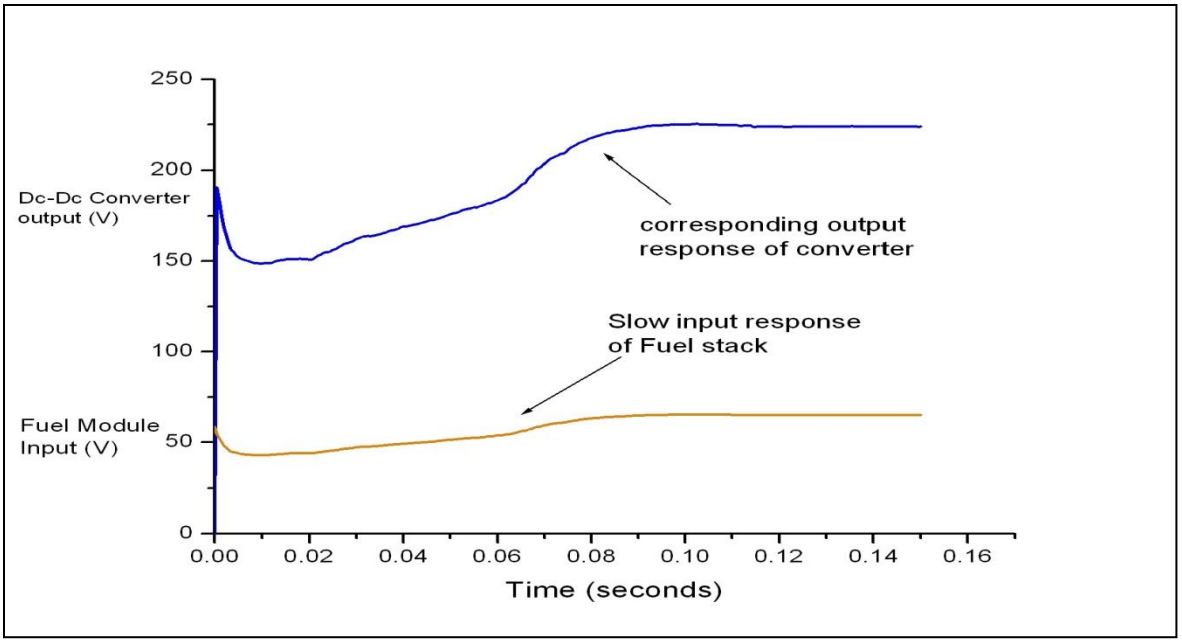


Figure 5.4: Dynamic response of fuel stack voltage and the corresponding wide range input dc-dc converter output

Transient response of fuel stack integrated to wide input range dc-dc converter is as shown in Figure.5.4. Like solar cells, fuel stack terminal voltage dips and then slowly recovers to reach steady state. This slow initial response in fuel cell is due to the presence of charge double layer represented by capacitor C_fuel in the fuel cell dynamic model and sluggish electrochemical reactions in fuel cells. From the graph, it is seen that the response of fuel stack takes 0.1 seconds to reach steady state which is much slower compared to solar module response.

To check the effectiveness of the ultra capacitor in wide input range dc-dc converter to a step increase in load current, dynamic fuel cell system was simulated with and without incorporating ultra capacitor. Figure 5.5 shows results of fuel stack and converter output voltages without the ultra capacitor in the system. It is observed that the stack and converter output voltages

immediately degrade with the step increase in load currents. Figure 5.6 shows system results incorporating ultra capacitor and it is observed that, a step increase in load current do not immediately degrade converter output as the ultra capacitor holds up the charge acting as a battery for certain interval of time.

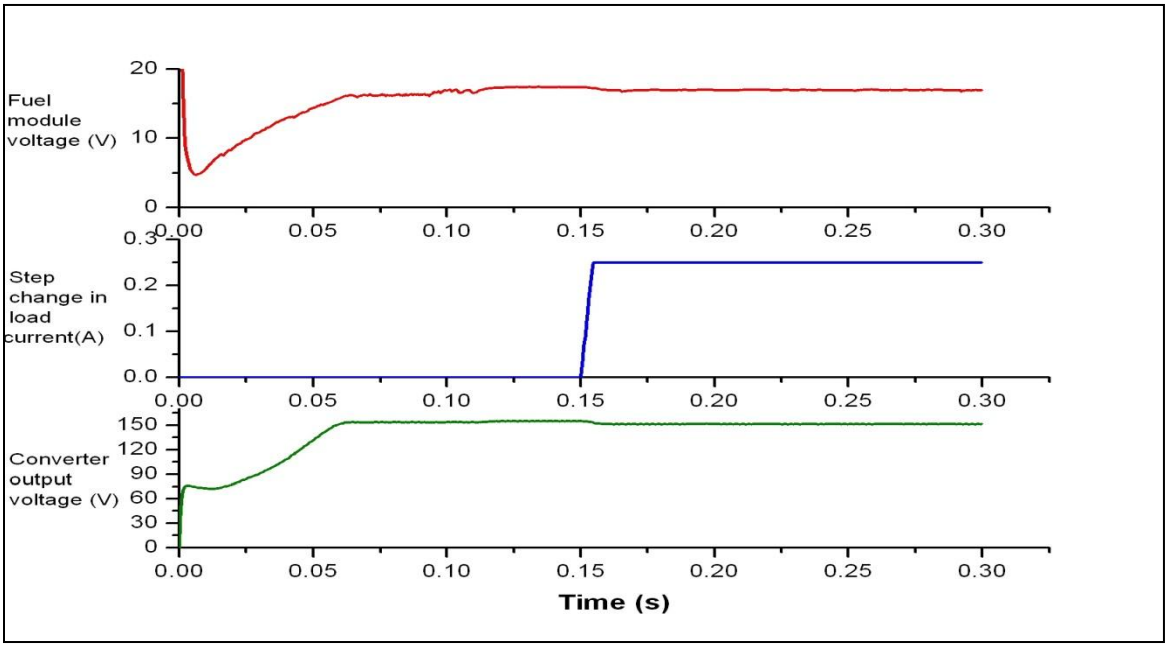


Figure 5.5: Dynamic response of fuel cell stack output voltage and corresponding wide range input dc-dc converter output without ultra capacitor to a step increase in load current

.

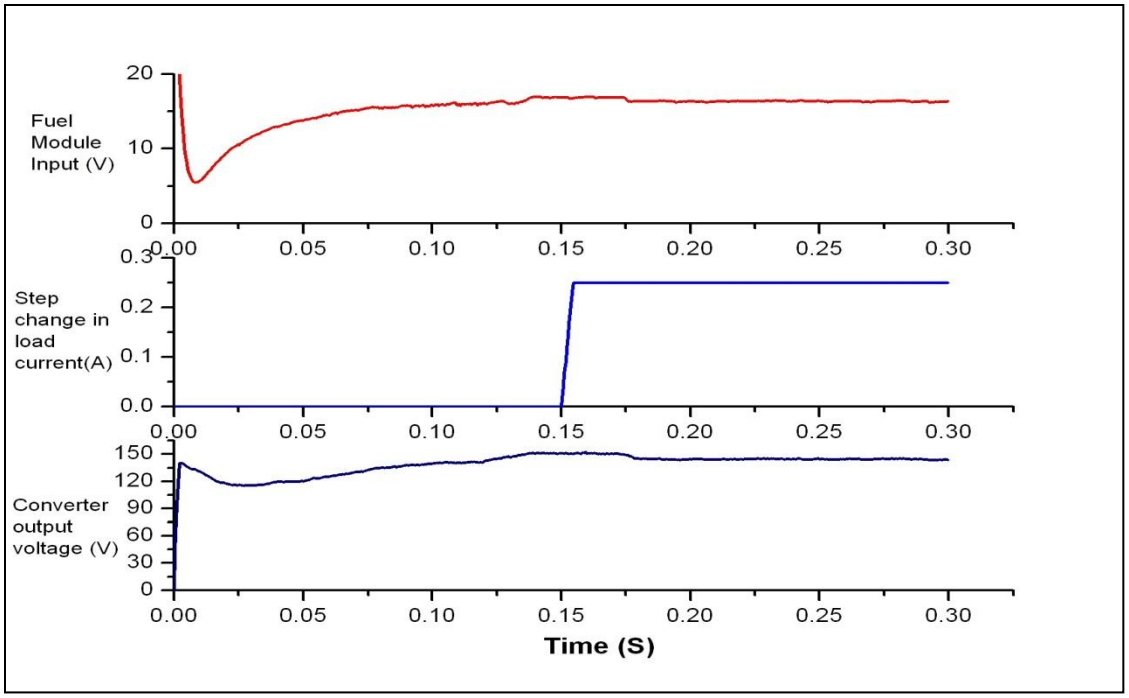


Figure 5.6: Dynamic response of fuel cell stack output voltage and corresponding wide range input dc-dc converter output with ultra capacitor to a step increase in load current.

## 5.2 Conclusions

The work presented in this study show a detail analysis and modeling of the two upcoming green energy sources solar cells and fuel cells. Analysis of their terminal characteristics show that both solar and fuel cells are associated with various factors, altering their terminal characteristics. In solar cells, series and shunt parasitic resistances affect their terminal characteristics to a great extent causing significant power losses from the cells. Both solar and fuel cells are sensitive to change in temperatures. Increase in operating temperatures decreases solar cell terminal voltage, whereas for fuel cells, increase in temperature improves their terminal voltage by lowering some of their voltage losses. Solar and Fuel cells possess dynamic characteristics which have to be

considered in modeling modules for power applications, as they can have greater impact on system performance. Shading effects is a major issue for solar cells which significantly deteriorates their output power. Hence bypass and blocking diodes are normally incorporated with them. Bypass diodes are effective to bypass current from shaded cells, when modules are wired in series, whereas blocking diodes are incorporated when modules are connected in parallel. Solar and fuel cells produce varying low dc voltage and normally require power converters to boost and regulate their voltage. Dc-dc converters, taking into account their efficiency, cost, size, robustness and specific requirement associated with the renewable sources have been presented. For Solar based energy systems, a boost derived Full-Bridge PWM dc-dc converter with diode rectifier at the output side is adopted to achieve a stable high side dc-link voltage. On the other hand, for Fuel cell energy systems, a dc-dc converter with wide input range is adopted comprising two boosting stages to achieve improved voltage regulation and is associated with ultra-capacitor to supply energy during sudden load demands. A three-wire PWM inverter is investigated to convert the input stable dc voltage from the dc-dc converters to the desired ac output signal for distributed applications. The results of integrated dynamic solar and fuel cell modules with power converters show slow response of modules to reach steady state, which is due to the time dependent circuit elements associated them. Fuel cells compared to solar cells have quite slower response. Usually their response time is in seconds. The uniqueness of this study includes analysis and presentation of simple models for the two leading green energy sources Solar and Fuel cells with no tedious mathematical description or complex simulation environment. Simulation results are presented to validate the effectiveness of the renewable sources and power conversion circuit designs.

## 5.3 Future Work

Modeling presented in this study is performed for single junction solar cells and specific type of fuel cell. Numerous types of solar and fuel cells with different materials, structures and dynamic behavior should be addressed through modeling. The scope of this study was associated with modeling solar modules, fuel modules and power converters. Future study of renewable systems will include designing feedback control systems for the power converters, MPPT systems for solar modules, battery storage systems to serve as secondary storage during night times and high power demands, designing more efficient and cost-effective power conversion circuits.

# REFERENCES


[1] Dachuan Yu, S.Yuvarajan, "Electronic circuit model for proton exchange membrane fuel cells", *Journal of Power Sources*, 2005, Vol.142, pp.238-242.

[2] S.Bifaretti, T.M.Browm ,A.Di Carlo, A.Reale, "Effects of power converters on dye-sensitized solar cells", 2007 IEEE.

[3] Engin Karatepe, Mutlu Boztepe, Metin Colak, " Development of a suitable model for characterizing photovoltaic arrays with shaded solar cells", *Solar Energy*,2007,Vol 81,pp.977-992.

[4] M.A.A.Younis, N.A.Rahim,S.Mekhilef, " Dynamic and Control of Fuel Cells".

[5] M.H.Todorovic, L.Palma,P.Enjeti, "Design of a Wide Input Range DC-DC Converter with a Robust Power Control Scheme Suitable for Fuel Cell Power Conversion",*IEEE Transactions,* April 2004.

[6] Bor-Ren Lin,Jyun-Ji Chen, "Three-Phase Two-Leg Inverter for Stand-Alone and Grid-Connected Renewable Energy Systems", *IEEE Transactions,*June 2006.

[7] Y.Wang,C.Klumpner, "Optimal Design of a DC/DC Converter for Photovoltaic Applications", *IEEE Transactions,* May 2005.

[8] X.Yu, M.R.Starke,L.M.Tolbert,B.Ozpineci, "Fuel cell power conditioning for electric power applications: a summary", *IET Electr.Power* Appl,2007,pp.643-656.

[9] C.Pica,R.Bojoi,G.Griva,A.Tenconi, "Series-Connected DC-DC Power Converters for Low-Voltage DC sources in Distributed Generation", *9th International Conference.Electrical Power Quality and Utilization.*October 2007.

[10] D.M.Bellur,M.K.Kazimierczuk, "DC-DC Converters For Electric Vehicle Applications", *IEEE Transactions,* July 2007.

[11] S.M.Hasan,I.Husain, "Power Electronics Interface with Ultracapacitors and Motor Control for a Fuel Cell Electric Vehicle", *IEEE Transactions,* Sepember 2005.

[12] Eduardo I. Ortiz-Rivera, Angel L.Reyes-Hernandez, "Understanding the History of Fuel cells", *IEEE Transactions,* 2007.

[13] Hanmin Tian, Lifei Liu, Bin Liu, ShiKui Yuan, " Influence of capacitance characteristics on dye-sensitized solar cell's IPCE measurement", *Journal of Physics D:Applied Physics*, Jan 2009.

[14] B.Ozpineci, Leon.M.Tolbert, Gui-Jia Su, Zhong Du, "Optimum Fuel Cell Utilization with Multilevel DC-DC Converters", *IEEE Transactions,* 2004.

[15] Jong Pil Lee, Byung Duk Min, " A Novel Topology for Photovoltaic Series Connected DC/DC Converter with High Efficiency Under Wide Load Range", *IEEE Transactions,* 2007.

[16] Masaki Murayama, Tatsuo Mori, "Evaluation of treatment effects for high-performance dye-sensitized solar cells using equivalent circuit analysis", Thin Solid Films, 2005,pp.123-126.

[17] Gilbert.M.Masters, "Renewable and efficient electric power systems", 2004.

[18] E.Ozdemir, S.Ozdemir, L.M.Tolbert, B.Ozpineci, "Fundamental frequency Modulated Multilevel Inverter for Three-Phase Stand-Alone Photovoltaic Application", *IEEE Transactions,* 2008.