View metadata, citation and similar papers at core.ac.uk
brought to you by CORE
provided by ePrints@TNMGRM (Tamil Nadu Dr. M.G.R. Medical University)

CERTIFICATE

This is to certify that the dissertation entitled **Anaemia In Nonhaematological Malignancies - A Descriptive Study** is a bona fide work done by **Dr.R.Palaniswamy**, Postgraduate student in the department of Pathology, Coimbatore Medical College, Coimbatore under the supervision of **Dr.R.Vimala,MD,** Professor &Head, Department of Pathology, Coimbatore Medical College, Coimbatore and under the guidance of **Dr.M.Moorthy**, Additional Professor, Department of Pathology, Coimbatore Medical College, Coimbatore in partial fulfilment of the requirements of the Tamilnadu Dr.MGR Medical University for the award of MD degree in Pathology.

Guide
Dr.M.Moorthy,MD,
Additional Professor,
Department of Pathology,
Coimbatore Medical College,
Coimbatore.

Dr.V.Kumaran,MS, MCh,
Dean,
Coimbatore Medical College,
Coimbatore.

Dr.R.Vimala, MD,
Professor & Head,
Department of Pathology,
Coimbatore Medical College,
Coimbatore.

DECLARATION

I, Dr.R.Palaniswamy solemnly declare that this dissertation entitled **Anaemia In Nonhaematological Malignancies – A Descriptive Study** was done by me at Coimbatore Medical College, Coimbatore between February 2009 and August 2009 under the able guidance of **Dr.M.Moorthy**,**MD,** Additional Professor, Department of Pathology, Coimbatore Medical College, Coimbatore.

This dissertation is submitted to the Tamilnadu Dr.MGR Medical University, Chennai towards the partial fulfilment of the requirements for the award of MD degree in Pathology.

I have not submitted this dissertation on any previous occasion to any University for the award of any degree.

Coimbatore Dr.R.Palaniswamy.

9th Dec, 2009.

ANAEMIA IN NONHAEMATOLOGICAL MALIGNANCIES – A DESCRIPTIVE STUDY

Dissertation submitted in

Partial fulfilment of the requirements for the award of

M.D. DEGREE
in
PATHOLOGY

The Tamil Nadu

Dr. M.G.R. Medical University

Chennai

March -2010

INTRODUCTION

Incidence of malignancies is on the rise. Advances in treatment protocols have resulted in increased longevity of the patients. Therefore greater focus is now on comorbid conditions, treatment of which would improve the survival and quality of life.

Over the past decade, there has been a growing appreciation of anaemia as the source of a wide range of symptoms and poorer outcomes in cancer patients.

Data published on 15 September, 2004 in the European Journal of Cancer[1] (online edition) reveals two out of three cancer patients suffer from anaemia and only 40% of these patients receive appropriate treatment (anaemia defined as haemoglobin less than 12 g/dL). Low haemoglobin levels correlate with poor quality of life and physical performance. Performance status deteriorates with decreasing haemoglobin. This correlation remains regardless of disease status or cancer treatment.

J Jaime Caro et al[2], in their systematic and quantitative review of anaemia as an independent prognostic factor for survival in patients with cancer, found that anaemia was associated with shorter survival times for patients with lung carcinoma, cervicouterine carcinoma, head and neck cancer, prostatic carcinoma, lymphoma and multiple myeloma. The overall estimated increase in risk of death was 65% (54 – 77%).

Tumour hypoxia may directly contribute to the resistance of the cancer patient to radiation therapy or chemotherapy via deprivation of the oxygen essential for the cytotoxic actions of these agents. Indirectly, tumour hypoxia may

contribute to radioresistance and chemoresistance by inducing proteomic and genomic changes that lead ultimately to malignant progression, with reduced local control and metastatic spread, and ultimately, increased resistance and decreased survival time. A direct association between hypoxia and anaemia appears likely, and anaemia is a modifiable condition in many cancer patients. This being the case, reducing tumour hypoxia by correcting anaemia with recombinant human erythropoietin (rHuEPO) and other agents appears to offer one possible therapeutic option for enhancing the effectiveness of standard cancer therapies[3]. Hence, it is worthwhile to study the incidence and pattern of anaemia in cancer patients in our hospital and create a database so that timely intervention by the oncologists with strategies to improve the outcome of treatment can be instituted whenever anaemia is diagnosed.

AIMS AND OBJECTIVES

The present study is undertaken

1) To study the incidence and pattern of anaemia in nonhaematological malignancies in patients aged 19 – 69 years attending an urban referral hospital

2) To study the severity of anaemia based on the haemoglobin concentration and

3) To study the haematological parameters in solid malignancies.

REVIEW OF LITERATURE

Haematopoiesis, the normal process of blood cell development, is dependent on the smooth functioning of three factors[4] : 1) the continuing presence of stem cells that are capable of differentiating and developing into mature blood cells 2) a bone marrow environment that is supportive of stem cell survival and functioning and 3) a complex system of highly regulated haematopoietic growth factors that regulate the proliferation, differentiation and survival of blood cells. Anaemia results when this system fails to function properly.

PREVALENCE OF ANAEMIA IN CANCER PATIENTS

Anaemia is a common accompaniment of malignancy. The prevalence of anaemia due to cancer progression varies based on the definition of anaemia and the type of cancer involved.

A survey of 38 studies, most of which evaluated anaemia prevalence in cancer patients before treatment found that the prevalence ranged from 5% (prostate cancer) to as high as 90% (multiple myeloma).The prevalence of anaemia appears to be especially high in patients with uterine-cervical cancers, advanced multiple myeloma and those suffering from cancer- related renal impairment[5] .

In a study at Beth Israel Medical Center and St. Luke's-Roosevelt Hospital Center, USA, 48% of patients presented to the Radiation Oncology department with anaemia (Hb <12 g/dL) and a total of 57% ultimately became anaemic by the end of the therapy[6].

15th Data published in the European Journal of Cancer (online edition) dated September 2004 reveals the following:

(Anaemia defined as Hb <12 g/dL)

Table 1. The burden of anaemia
(from the European Cancer Anaemia Survey)

Treatment Status	Haematological Tumours (n = 3010)	Solid tumours (n =11,453)
Prior to treatment initiation	48%	28%
During treatment	72%	66%
Number of patients untreated for Hb less than 10 g/dL	51%	63%

(Ludwig and colleagues)[7]

A number of different factors can contribute to anaemia in nonhaematological malignancy and it is common for several factors to operate in patients with malignancy. The type of anaemia depends on the dominant underlying mechanism or mechanisms.

Factors that contribute to anaemia in patients with nonhaematological malignancy[8,9]

Common factors

- Blood loss
- Infections
- Chronic 'inflammatory – like' response

Less common factors

- Bone marrow infiltration
- Inadequate nutrition
- Impaired renal function
- Haemolysis
- Myelosuppressive effects of treatment[10]

BLOOD LOSS

Anaemia due to blood loss develops extremely commonly in carcinoma of the stomach and colon and is particularly important as it may be the presenting manifestation which antedates symptoms referable to the alimentary tract.

INFECTION

Infection may be an important contributing factor to anaemia in malignancy, such as carcinoma of bronchus or fungating lesion at any site. The mechanism by which the anaemia is produced is as previously considered under anaemia of chronic disorders, a mechanism that can also operate in the absence of infection in subjects with advanced malignant disease.

METASTASIS TO BONE MARROW

Metastasis to bone marrow occurs in about 20% of all fatal cases of nonhaematological malignancy. After the lungs and the liver, the bone marrow is the next most common site of 'blood-borne' metastases. Breast and prostate cancer are the primary tumours that most frequently metastasize to bone, but carcinoma of the lung, kidney, thyroid, and stomach and malignant melanoma also commonly metastasize there. Metastatic growth most frequently occurs in

the sites normally occupied by red bone marrow, namely the vertebrae, ribs, sternum, pelvis, skull, and upper ends of the femur and humerus.

Anaemia is common in patients with secondary carcinoma of the bone marrow, but it can be absent even when widespread bone involvement is demonstrated by X-ray. Many factors in patients with advanced metastatic disease can contribute to the genesis of anaemia - malnutrition, infection, blood loss, micro-angiopathy and effects of the type that produce the anaemia of chronic disorders - let alone replacement of haematopoietic tissue by tumour cells. The latter most frequently is not the major cause of the anaemia, in contrast to the situation in, for example, acute leukaemia.

In marrow metastasis, there may or may not be anaemia. When anaemia is present, it is usually normochromic and normocytic. A finding of diagnostic significance indicating the presence of marrow metastasis is a leuco-erythroblastic blood picture, in which nucleated red cells and granulocyte precursors are present. Other features are anisocytosis, poikilocytosis and occasional macrocytes and polychromatic cells. Sometimes a moderate leucocytosis is present, and sometimes a moderate degree of leucopenia, although the white cell count is rarely less than 2×10^9/L.

Interference with nutritional intake caused by anorexia, vomiting, dysphagia etc,. can contribute to the production of anaemia by impairing the intake or absorption of nutrients necessary for erythropoiesis, especially iron and folate, but it is rarely the soul cause of anaemia. Megaloblastic macrocytic aneamia associated with carcinoma of the stomach is usually due to the

development of carcinoma in a patient with gastric atrophy associated with pernicious anaemia .

HAEMOLYTIC ANAEMIA:

Some shortening of red cell lifespan is common in disseminated malignancy, and is of importance since it may result in an unsatisfactory response to blood transfusion. A relatively uncommon, but definitely associated, form of severe haemolysis is micro- angiopathic hemolytic anaemia , which is seen particularly in metastatic mucin-secreting adenocarcinomas[11].

In order to understand the pathophysiology of the iron deficiency anaemia and anaemia of chronic disease, the iron metabolism is considered here in detail.

IRON METABOLISM

Most of the iron is present in the oxygen carrying protein of the red blood cells-haemoglobin. Iron turnover is also dominated by the synthesis and breakdown of haemoglobin. Haem is synthesis in nucleated red cells in the bone marrow by a pathway ending with the incorporation of iron into protoporphyrin IX by ferrochelatase. Haem breakdown takes place in phagocytic cells, largely those in the spleen, liver and bone marrow. Iron is released from haem by haem oxygenase and is largely reused for haem synthesis. Every day about 30 mg of iron are used to make new haemoglobin and most of this is obtained from the breakdown of old red cells.

Relatively little iron is lost from the body (about 1mg/day in men) and these losses are not influenced by body iron content or the requirement of the body iron. The body iron content is maintained by variation in amount of iron absorbed.

In most men and postmenopausal women there is some storage iron. This is iron in ferritin or its insoluble derivative haemosiderin, which is available for haem synthesis if necessary.

DIETARY IRON ABSORPTION

Iron absorbed depends on[12]

- the amount of iron in the diet
- its bioavailability
- the body's need for iron
- erythropoietin concentration
- age and
- inflammatory states with hepcidin release.

Nonhaem iron is released from food as Fe^{3+} and reduced to Fe^{2+} by a membrane – bound, ferrireductase, Dcytb.

Iron is transported across the brush-border membrane by the metal transporter, DMT-1.Some iron is incorporated into ferritin and lost when the cells are exfoliated.

Iron destined for retention by the body is transported across the serosal membrane by ferroportin-1. Before uptake by transferrin, Fe^{2+} is oxidised to Fe^{3+} by hephaestin or by plasma ceruloplasmin.

Haemoglobin and myoglobin are digested in the stomach and small intestine. Haem is initially bound by haem receptors at the brush border membrane and the iron is released intracellularly by haem oxygenase before entering the labile iron pool and following a common pathway with iron of nonhaem origin[13].

REGULATION OF IRON ABSORPTION

Iron absorption may be regulated both at the stage of mucosal uptake and at the stage of transfer to the blood. As epithelial cells develop in the crypts of Lieberkuhn their iron status reflects that of the plasma (transferring saturation) and this programmes the cells to absorb iron appropriately as they differentiate along the villus.

Transfer to the plasma depends on the requirements of the erythron for iron and the level of iron stores. This regulation is mediated directly by hepcidin, a peptide synthesized in the liver in response to iron and inflammation. Hepcidin blocks intestinal iron absorption and iron release from liver and spleen. The main mechanism by which hepcidin exerts its effects appears to be control of ferroportin. Indeed, ferroportin is the only known cellular iron exporter, which cannot mediate iron release from the cell once hepcidin exerts its actions.

CELLULAR IRON UPTAKE AND RELEASE

Transferrin binds to the transferring receptor (TfR) lining the cell. The two proteins bind strongly to form a high affinity complex which initiates endocytosis of the local membrane. The resulting endosome contains the transferrin-transferrin receptor complex. The pH of the endosome is then reduced by a proton pump to induce a conformational change in holotransferrin, which releases its iron. Iron is transported into the cell via DMT-1.This iron is then either stored as ferritin or used within the cell (for Hb synthesis in erythroid precursors).The apotransferrin and the transferrin receptor return to the cell surface where they dissociate at neutral pH so that the cycle can start again.

The reticuloendothelial macrophages play a major role in recycling iron resulting from the degradation of haemoglobin from senescent erythrocytes. They engulf red blood cells and release the iron within using haem oxygenase. The iron is rapidly released to plasma transferrin or stored as ferritin. Little is known about the mechanism of release, but ferroportin 1 may be an essential component.

Ferritin is found in all cells and in the highest concentration in liver, spleen and bone marrow[13].

With the recognition that the small quantity of ferritin in human serum (15- 300 µg/L in healthy men) reflects body iron stores, measurement of serum ferritin has been widely adopted as a test for iron deficiency and iron overload.

ERYTHROPOIETIN

EPO is an important erythropoiesis activating hormone. The recombinant synthesized molecule is called epoetin (rHuEPO). EPO is a glycoprotein with a molecular weight of 34 kDa. The core of the molecule is a peptide of 165 amino acids, which is responsible for receptor binding of the hormone. The carbohydrate part makes up for about 40% of the molecule and is of pivotal importance for in vivo function of the hormone. This carbohydrate component is highly variable and exists in various isoforms with different biological activity.

During foetal growth, EPO is predominantly synthesized in the liver. In adult life, however, EPO is predominantly synthesized in peritubular endothelium cells of the kidney with only 20% contribution to overall EPO production from hepatocytes. Synthesis of EPO is regulated by hypoxic stimulation, which triggers transcriptional upregulation. Reduction in circulating haemoglobin

concentration triggers an exponential increase in EPO concentration. Concentration of circulating EPO is not mediated via release from intracellular storage but rather depends on direct regulation of gene expression.

EPO action and EPO receptor

Erythrocyte precursor cells such as proerythroblasts and colony forming units-erythroid (CFU-E) are the primary targets of EPO. Only a fraction of these precursor cells mature while a great proportion undergo apoptosis in the absence of EPO. The differentiation of pluripotent stem cells via intermediate stages into CFU-E occurs even in the absence of EPO.

EPO acts through specific EPO receptors. The number of receptors declines continuously during cell differentiation, and no receptor expression is found in reticulocytes and erythrocytes. It is interesting to note that the affinity of EPO to its receptor depends on its carbohydrate portion. A higher content in carbohydrate leads to a decrease in receptor affinity. Such knowledge helps in understanding the prolonged plasma half-life in certain genetically engineered EPO analogues such as darbepoetin-alpha.

There are a number of pleiotropic effects of EPO beyond regulation of haematopoiesis. These are partly due to the fact that EPO receptors have been identified in a number of different tissues such as skeletal muscle, smooth muscle and the myocardium. EPO receptors are further expressed within the brain and spinal cord, in the lungs, kidneys, bowel, pancreas, uterus, retina and in the gonadal glands. EPO protects neurons from hypoxia-induced damage[12].

Erythropoietin resistance

Up to 90% of the anaemia patients treated with EPO respond to this therapy with a significant increase in haemoglobin. The remaining 10% of patients, however do not show a sufficient increase in haemoglobin although high doses of epoetin had been administered or an initially appropriate response to EPO was lost in the course of EPO therapy.

The underlying mechanisms include

- Iron deficiency
- Inflammatory activation
- Blood loss
- Hyperparathyroidism
- Aluminium induced toxic effects
- Deficiency of vitamin B12 or folic acid
- Haemolysis
- Impaired erythropoiesis
- Haemoglobinopathy
- ACE inhibitor therapy and rarely,
- Antibodies against EPO.

ANAEMIA OF CHRONIC DISEASE

PATHOPHYSIOLOGY

The anaemia of chronic disease is of immunological origin. In the clinical setting, it is mostly found in patients with chronic inflammatory processes, chronic infectious diseases, and in patients with malignant tumours. Perturbations in iron homeostasis can be found that are associated with an increased uptake and

retention of iron in the cells of the reticuloendothelial system. This leads to the deposition of iron in the cells of the reticuloendothelial system, which, in turn yields a lack of iron for erythropoiesis. The increase in iron storage appears to be mediated by pro-inflammatory cytokines. Tumour necrosis factor-alpha, for example, inhibits synthesis of the iron storage protein ferritin in macrophages and hepatocytes. Additionally, the expression of the membrane protein DMT-1 is upregulated by interferon-gamma, bacterial lipopolysaccharide and tumour necrosis factor-alpha. This protein mediates iron transport into the intestinal mucosal cell as well as into activated macrophages. Moreover, export of iron from these cells is inhibited through downregulation of the expression of ferroportin. Hepcidin appears to play a central role in this setting, because it is more abundantly expressed under the influence of lipopolysaccharide and interleukin-6 secretion. This, in turn, yields an additional inhibition of iron absorption from the gut. Furthermore, the action of aforementioned cytokines, especially that of interferon-gamma, leads to a direct suppression of erythropoiesis. It has been proposed that the responsible mechanisms are an induction of apoptosis and an inhibition of erythropoietin expression.

In addition to the effects of iron sequestration, inflammatory cytokines promote the production of white blood cells[16]. Bone marrow produces both red blood cells and white blood cells from the same precursor stem cells. Therefore, the upregulation of white blood cells causes fewer stem cells to differentiate into red blood cells. This effect may be an important additional cause for the decreased erythropoiesis seen in anaemia of inflammation, even when erythropoietin levels are normal, and even aside from the effects of hepcidin.

In the short term, the overall effect of these changes is likely positive: it allows the body to keep more iron away from bacterial pathogens in the body, while producing more immune cells to fight off infection. Bacteria, like most life forms, depend on iron to live and multiply. However if inflammation continues, the effect of locking up iron stores is to reduce the ability of the bone marrow to produce red blood cells.

CLINICAL PROFILE

The anaemia of chronic disease presents itself as a normochromic normocytic anaemia[14]. It normally does not lead to a decrease in haemoglobin below 8 g/dL. The diagnosis is usually established by a low serum iron concentration, a low transferrin concentration, a low transferrin saturation, and normal or increased ferritin values in the presence of a chronic illness[15,16]. The number of reticulocytes is usually low, which points to a small rate in de novo production. Serum values of iron and transferrin saturation are normally reduced, because the iron is trapped inside the reticuloendothelial system[17]. Assessing C-reactive protein values is usually helpful to differentiate acute inflammatory processes[16].

Table 2 Underlying Causes of Anaemia of Chronic Disease[18]

Associated Diseases	Estimated Prevalence
Infections (acute and chronic) Viral infections including HIV Bacterial Parasitic Fungal	18 - 95%
Cancer* Haematological Solid tumour	30 – 77%
Autoimmune Rheumatoid Arthritis Systemic lupus erythematosis and connective tissue diseases Vasculitis Sarcoidosis Inflammatory bowel disease	8 – 71%
Chronic rejection after solid organ transplantation	8 – 70%
Chronic kidney disease and inflammation	23 – 50%

*The prevalence of anaemia in patients with cancer is affected by therapeutic procedures and age. A high prevalence was reported in one study in which 77% of elderly men and 68% of elderly women with cancer were anaemic[19]. In another

study, anaemia was observed in 41% of patients with solid tumours before radiotherapy and in 54% thereafter[20].

ANAEMIA MANAGEMENT WITH ERYTHROPOIESIS STIMULATING AGENTS: RISKS AND BENEFITS

More than 80% of cancer patients undergoing chemotherapy develop anaemia (Hb <12g/dL), and the need for blood transfusion is frequent[11]. Erythropoiesis Stimulating Agents (ESAs) were developed with the aim of reducing transfusion dependence, and meta-analyses of clinical trials confirm that they have been highly successful in achieving this[7,21,22].

The systematic review by Bohlius et al [23]. incorporated data from a total of 9353 cancer patients, with tumours including those of the breast, lung, and gastrointestinal tract, treated in 57 trials. Treatment with epoetin or darbepoetin significantly reduced the need for transfusion (relative risk, 0.64; 95% confidence interval, 0.60 – 0.68), and the chance of achieving a haematological response was consistent across tumour types [24,25].These findings were supported by the 2006 analysis of the Agency for Healthcare Research and Quality[26]. Both meta-analyses noted a slightly higher risk for venous thromboembolic events in patients administered epoetin or darbepoetin, and were suggestive that this risk was associated with higher Hb levels.

ESAs have the advantage of avoiding the fluctuations in Hb level associated with RBC transfusions, as well as reducing the risks for disease transmission and the cardiac and hepatic consequences of iron overload (an issue in patients with haematological malignancies). Furthermore, under controlled conditions, RBCs can be stored for up to 42 days prior to transfusion,

and this is a potential source of problems. Indeed, in retrospective studies, a correlation was found between the duration of RBC storage and the mortality rates after transfusion[27]. Variations can occur in stored RBCs over time, which may include changes in RBC-dependent vasoregulatory function and S-nitrosohaemoglobin (SNO-Hb), and RBC deformability. Changes can occur even soon after blood collection, where SNO levels (and their physiological correlate RBC-dependent vasodilation) become depressed. Thus, changes may occur in stored RBCs that impact the function of the RBCs and can affect clinical outcomes.

In the 13 years since recombinant erythropoietin was first approved for the treatment of cisplatin – related anaemia, around four million patients have been treated with ESAs; and their quality of life (when symptoms have been anaemia related) has been greatly improved as a consequence[28,29]

ERYTHROPOIETIN RECEPTORS ON TUMOUR CELLS

Given the apparent presence of erythropoietin receptors (EPORs) in cancer tissues[30], questions have been raised about the possible influence of erythropoiesis – stimulating agents (ESAs) on tumour growth and proliferation. In 2003, Henke et al[31] published the results of a study of patients with head and neck cancer undergoing radiation therapy who were randomized to a control group or additional treatment with epoetin beta (300 U/kg). The purpose of the study was to investigate the potential radiosensitizing effects of raising the level of haemoglobin towards a target value of 14 g/dL in women and 15 g/dL in men. Epoetin beta treatment effectively raised the haemoglobin level, but was associated with significantly shorter progression-free and overall survival times.

A subsequent report presented data on the erythropoietin receptor status in tissue samples from 154 patients who were among the 351 patients enrolled in the randomized controlled trial. This retrospective analysis assessed the effect of epoetin beta on progression – free survival in relationship to EPOR expression. Staining studies used C20 antibody. Around two thirds of samples stained positive and, among this EPOR-positive group of patients, the local disease-free-survival rate was significantly lower in patients treated with epoetin than among controls. Among the smaller number of patients whose tumour tissue did not stain for the EPOR, there was no significant difference in outcome between the placebo and treated groups.

These findings raised the question of whether the presence of EPOR might stimulate tumour cell growth when bound by EPO or an EPO-like ligand[32]. However, the basis for such a study is the presumption that the EPOR antibody detects what it is meant to detect, and not other proteins; and it is by no means clear that this is the case. Data from several groups suggest that the antibodies currently available are not valid tools for determining the EPOR status of tissue sections obtained form cancer patients.

EPOR gene is not an oncogene, and there is no selective advantage for tumours to overexpress it. EPO mRNA is detectable in tumour cell lines, but is not elevated compared with nontumour tissues. Tumour cell lines show no or only weak binding to EPO. Surface expression of EPORs on tumours has not been unambiguously demonstrated. In fact, most of the staining is in the cytoplasm, a site in which the receptor cannot, of course, bind its ligand[33].

In more than 25 malignant and benign human cell lines, EPO did not increase the proliferation rate of EPOR-positive tumour cell lines, nor did it affect c-fos mRNA expression in these cell lines[34]. Collectively, the majority of in vitro studies have shown that ESAs are likely to have a neutral effect on human cancers.

Examination of the amino acid sequence of the purported EPOR demonstrated by Western blotting revealed that it was not that protein at all but one of the several isoforms of heat shock protein (HSP) 70. C20 recognized HSP 70 almost exclusively. This fact is of interest to oncologists because HSP 70 is a highly conserved family of chaperone proteins that are induced in normal cells by stress and that have important functions in promoting cell survival and resistance to apoptosis[35]. They are found in tumors, particularly those of an aggressive phenotype. Expression correlates with shorter survival and resistance to treatment in many tumours.

For this reason, results from clinical studies purporting to relate the administration of ESAs to shorter survival must be considered inconclusive and complicated by methodological and sampling issues. Ongoing studies will help clarify whether the existence of the EPOR has any relevance at all in the cancer setting.

A working party of the European Organisation for Research and Treatment of Cancer met in September 2007 to update the Organisation's 2006 guidelines on use of Erythropoietic Stimulating Agents. In brief, the EORTC Working Party's conclusions and recommendations are now as follows[36]:

ESAs should be initiated at an Hb level of 9-11 g/dL in cancer patients receiving chemotherapy or radiochemotherapy, based on anaemia – related symptoms.

ESAs may be considered in selected asymptomatic chemotherapy patients with an Hb level of 11–11.9 g/dL if this would prevent a further decline in Hb; such a decision should take into account an individual's Hb level prior to chemotherapy and the type, intensity, and duration of chemotherapy or other planned treatment.

ESAs are not recommended for prophylaxis of anaemia in patients with normal Hb values prior to undergoing chemotherapy and/or radiotherapy.

ESAs may be given in selected patients with cancer-related anaemia not undergoing chemotherapy or radiotherapy with an Hb level of 9 – 11 g/dL if justified by anaemia – related symptoms and careful assessment of need. Note: In certain countries this is not an approved indication.

The target of treatment with ESAs is to achieve an Hb level of about 12 g/dL.

In patients not responding in 4 – 8 weeks, there is no recommendation that dose escalation should be the general approach.

In responding patients, treatment should be continued until an Hb level of around 12 g/dL is reached and patients show improved symptoms[37]. Further treatment of patients reaching the target Hb level should be individualized using an increased dosing interval and/or titrating downwards to the lowest effective maintenance dose.

There is no evidence that oral iron supplements increase response to erythropoietic proteins. There is evidence of a better response to erythropoietic proteins with i.v. iron. However, i.v. iron use should be reserved for patients with absolute or functional iron deficiency.

Combining the data from all available studies indicates that using ESAs to treat anaemia in cancer patients leads to a 1.6 fold higher risk for thromboembolic events.

Epoetin alfa and epoetin beta can be given on a fixed – dose weekly basis.

Darbepoetin can be used on an every -3-week, fixed-dose basis, or once weekly at 2.25 µg/kg. Certain countries also use a 2-week regimen.

UNDERSTANDING THE IMPACT OF ANAEMIA

In 1951 Hollaender et al. published their study on the radiosensitivity of aerobically and anaerobically cultured Escherichia coli[38]. Their study helped form the foundation of current thinking on tumour hypoxia and its effects on radiotherapy. Under hypoxic conditions, tumours appear to be less susceptible to radiation, and clinical outcomes are poorer[39.] A recent study investigated the relationship between tumour hypoxia and tumour control and survival in patients with cervical cancer undergoing radiotherapy. The results of tumour oxygenation measurements taken prior to radiotherapy by an Eppendorf oxygen electrode and measured by the Eppendorf pO2 histograph indicate that tumour hypoxia is associated with an increased risk of relapse and death, particularly in patients with bulky hypoxic tumours. Tumour oxygenation was significantly associated

with disease-free survival (p=0.02), as was tumour size (p=0.0003), stage (p=0.006), and pretreatment haemoglobin level (p=0.001) [40].

The association between anaemia and tumour hypoxia is not fully understood, but it is well established that low haemoglobin levels independently predict poorer survival and relapse[41,42]. However it is not clear whether low haemoglobin levels are associated with poor survival because they indicate advanced disease or because they indicate poor tumour oxygenation. Current thinking, however, recognizes anaemia as a likely contributor to tumour hypoxia[43] with a focus on anaemia and locoregional failure.

The impact of anaemia on survival and relapse after radiotherapy has been investigated for a number of tumour types. A recent study looked at the association between anaemia and overall survival and local tumour control in patients with locally advanced head and cancer undergoing radiation therapy[44]. Patients were stratified by haemoglobin levels and were given either radiotherapy with a hypoxic cell sensitizer,etanidazole, or radiation therapy alone. The survival rate at five years for patients with anaemia – defined as haemoglobin concentration <14.5 g/dL for men and <13 g/dL for women – was 22%. For nonanaemic patients the rate at five years was 36% a significant increase compared with anaemic patients (p=0.0016). Treatment with etanidazole did not significantly improve survival among any group of patients. Locoregional failure at five years differed significantly between patients with or without anaemia. Patients with normal haemoglobin levels experienced locoregional failure at a rate of 52% compared with 68% for anaemic patients (p=0.00028). Again, the addition of etanidazole did not significantly affect locoregional control among any

group of patients. Anaemia was significantly related to decreased survival and increased relapse rates.

A strong correlation between haemoglobin levels, local control, and survival was also observed in a study of 109 patients with T1 – T2 squamous cell carcinoma of the glottic larynx treated with definitive radiotherapy[45]. Patients who presented with haemoglobin values >13 g/dL had significantly higher two–year rates of locoregional tumour control (95% versus 66%, p=0.0018) and survival (88% versus 46%, p=0.001) as compared with patients with haemoglobin values <13 g/dL.

Improving the efficacy of radiation therapy and, therefore, locoregional response and survival, may be achieved by addressing anaemia and tumour hypoxia. Recent studies have investigated strategies that reduce anaemia and tumour hypoxia such as hypoxic cell sensitizers, fluosol, carbogen breathing, hyperbaric oxygen, red blood cell transfusions, and recombinant human erythropoietin (epoetin alfa). In a study of patients with head and neck cancer given radiation and mitomycin C, a hypoxic cell sensitizer, or radiation alone, the data showed that the addition of mitomycin C significantly improved local recurrence-free survival and cause-specific survival. In a preliminary study, advanced head and neck cancer patients treated with daily chemoradiotherapy received carbogen breathing, blood transfusions, or erythrppoietin to increase their haemoglobin levels to nonanaemic levels (>13 g/dL) in order to overcome tumour hypoxia . A 100% complete response rate was observed. At 18 months, 6% had local recurrence and 14% had distant metastasis. Carbogen breathing

and anaemia correction resulted in improvements in local control, cause-specific survival, and overall survival[46].

Aggressive management of anaemia, when incorporated into the overall management strategy for advanced head and neck cancer, has the potential to provide significant improvements in clinical outcomes. In addition to the head and neck data just discussed, opportunities exist in other sites.

In patients with cervical cancer undergoing radiotherapy with or without chemotherapy, those who maintained an average nadir weekly haemoglobin level (ANWH) above 12 g/dL experienced a decrease in pelvic and distal recurrence ($p<0.0001$ and $p=<0.0005$, respectively) compared with those whose ANWH fell below 12 g/dl. In this study, patients whose haemoglobin fell below 10 g/dL, 11 g/dL, or 12 g/dL, depending on the study site, received blood transfusions in order to maintain ANWH above these levels[47]. Finally, in patients with advanced cervical cancer, those patients who maintained haemoglobin levels above 10 g/dL during radiotherapy had improved locoregional tumour control compared with those patients whose on-therapy values fell below 10 g/dL ($p<0.01$)[48].

Professional awareness of the human and economic costs of anaemia in patients with cancer has progressed substantially in the last decade[49]. Most recently, research completed by The Fatigue Coalition has revealed the profound burden that fatigue imposes on patients with cancer and their caregivers[50]. In turn, recent studies have shown that modest improvements in haemoglobin concentrations can result in significant improvements in patient QOL. A recent study of epoetin alfa use in patients receiving chemotherapy demonstrated that

increases in haemoglobin of less than 2 g/dL resulted in significantly improved QOL according to a questionnaire (Functional Assessment of Cancer Therapy-Anaemia; FACT-An) and linear analog scale assessment (LASA)[51].QOL improvements were observed independent of response to chemotherapy. Another study of erythropoietin use in patients undergoing chemotherapy demonstrated significant improvements in LASA scores, indicating improvement in QOL. The mean increase in haemoglobin in this study was only 1.8 g/dL[52].

Even modest anaemia has a detrimental effect on clinical outcomes[53]. Dubray[54] reported a study of head and neck cancer patients receiving radiotherapy and demonstrated that high pretreatment haemoglobin significantly related to higher survival rates. In this study, those with anaemia had functional – defined as Hb <12 g/dL, not physiologic – defined as Hb 8 g/dL or less, anaemia. All but 3 of 63 patients with anaemia – defined as haemoglobin <13.5 g/dL for men and haemoglobin< 12.0 g/dL for women – had haemoglobin > 10 g/dL.

THE EUROPEAN CANCER ANAEMIA SURVEY

That the impact of anaemia is not always fully appreciated is highlighted by the results of the European Cancer Anaemia Survey (ECAS) [55, 56, 57]. A large, prospective, epidemiologic, observational study conducted in 24 European countries, ECAS enrolled and collected data on 15,367 patients with various solid and haematological malignancies treated at 748 academic, community, and private centres specializing in cancer care. The objective of the survey was to determine the prevalence and incidence of cancer-related anaemia, anaemia management practices, and risk factors for anaemia development in the

European cancer community. Importantly, ECAS not only demonstrated the high prevalence and incidence of cancer – related anaemia but also revealed that anaemia treatment was often suboptimal, either not being offered at all or being initiated only after the patient's haemoglobin level had dropped to a mean of 9.7 g/dL. Moreover, for one third of chemotherapy patients who received epoetin and for more than half of chemotherapy patients who received transfusion, anaemia treatment was not offered until their Hb levels had declined to < 9 g/dL.

Logistical regression analyses in the overall European Cancer Anaemia Survey population identified five factors as significant and suitable predictors of anaemia: lower initial Hb, having lung or gynaecologic cancer versus gastrointestinal / colorectal cancer, any other cancer versus gastrointestinal / colorectal cancer, platinum chemotherapy and being female[56].

THE POLISH CANCER ANAEMIA SURVEY

The purpose of POLCAS[58], the retrospective multicentre study in cancer patients in Poland was to analyse the frequency of anaemia and methods of its treatment. An attempt was also made to evaluate the haemoglobin levels in relation to patient's performance status prior to and after anticancer treatment. A total of 999 patients were enrolled, who were followed up to six chemotherapy cycles or six evaluation points within a 6-month period.

The incidence of anaemia at the time of enrolment into the study equaled 31%, and was observed mainly among gynaecologic and colorectal cancer patients. After anticancer treatment, anaemia was reported in 54%of patients, mainly gynaecological and lung cancer patients. As many as 71%of patients were anaemic at some point of time during the survey, which was most often

documented among gynaecological, lung and testicular cancer patients. At the fifth visit more than 50%of patients were anaemic. The difference between the mean Hb level at first and sixth visit was 1.04 g/dL. However, anaemia was treated in only 32% of patients (red blood cell transfusions 61%, iron supplementation 33% while erythropoietic stimulating proteins in just 6%).Worse performance status was observed in anaemic patients with lung cancer and head and neck cancer.

THE AUSTRALIAN CANCER ANAEMIA SURVEY

The Australian Cancer Anaemia Survey (ACAS)[59] was initiated to create a 'snapshot' database documenting prevalence, incidence, frequency and management of anaemia in the adult cancer patients attending oncology departments in Australia, and to identify patient and treatment characteristics associated with anaemia.

ACAS was a 6-month observational, prospective, multicentre study of 694 patients recruited from outpatient oncology clinics in 24 hospitals in five Australian states between 9 April 2001 and 31 July 2001.

Prevalence of anaemia at enrolment was 35%. Frequency of anaemia (either present at enrolment or developing during the study) was 57% and varied with tumour type , from 49% (lymphoma / myeloma) to 85% urogenital cancer.

Patients who received radiotherapy either in combination or concomitant with chemotherapy were more likely to have anaemia (73%) than those receiving chemotherapy alone (58%). Of all chemotherapy patients not anaemic at enrolment, 23% developed anaemia by the second month follow up. Independent

predictors for anaemia in chemotherapy patients were low baseline Hb level and use of platinum chemotherapeutic agents.

Anaemia was treated in 41% of patients with anaemia at enrolment – by transfusion (36%), iron (5%) and erythropoietic agents (2%). Frequency of anaemia treatment varied between tumour types, from 19% (breast cancer) to 60% (leukaemia). The mean trigger Hb for initiating transfusion was 9.5 g/dL.

DEFINING ANAEMIA IN CANCER

According to September 2007 Update on the European Organization for Research and Treatment of Cancer guidelines, the target of treatment with Erythropoiesis – Stimulating Agents is to achieve an Hb concentration of about 12 g/dL in cancer related anaemia[36].

American Society of Hematology / American Society of Clinical Oncology 2008 updated guidelines on the use of ESAs also states that Hb can be raised to (or near) a concentration of 12 g/dL, at which time the dosage of epoetin or darbepoetin should be titrated to maintain that level[37].

That is why, numerous large scale studies on cancer related anaemia like ECAS[55], ACAS[59], POLCAS[58] and others have defined anaemia as Hb < 12g/dL.

DIFFERENTIAL DIAGNOSIS

In cancer patients with anaemia, the major differential diagnosis is iron deficiency anaemia. This is not a trivial distinction. The diagnosis of iron deficiency anaemia mandates identification of a source of blood loss. Incorrectly labeling a patient with anaemia of chronic disease as iron deficient exposes the patient to intrusive and expensive (although fairly safe) diagnostic procedures and to ineffective therapy. Mislabeling an iron deficient patient as having

anaemia of chronic disease may result in failure to diagnose an underlying gastrointestinal malignancy at a curable stage and in failure to offer inexpensive and effective therapy.

Table – 3. Serum Values to Differentiate Anaemia of Chronic Disease from Iron Deficiency Anaemia

	Anaemia of chronic disease	Iron deficiency anaemia ↓	Both ↓
Iron	↓		↓
Transferrin	↓ ↔	↑	↓
Transferrin saturation	↓	↓	↓
Ferritin	↔ ↑	↓	↓ ↔
Soluble Transferrin receptor	↔	↑	↑ ↔
Ratio of soluble Transferrin receptor to log ferritin	Low(<1)	High(>2)	High(>2)
Cytokine Levels	↑	↔	↑

Evaluation of anaemia begins with haemoglobin estimation, peripheral smear examination and very rarely serum ferritin, iron and TIBC are done. However, these tests are not cost effective and do not depict the exact bone marrow iron stores in conditions associated with infection/inflammation. In differentiating between iron deficiency anaemia and anaemia of chronic disorders these investigations are of limited value[60].

Serum Ferritin level of 12 µg/L is mostly used for historical point of view. This value has a high specificity, but an unacceptably low sensitivity. E Joosten et al.[16] in a study found a lower reference limit of 50 µg/L for serum ferritin, the best discriminant between Iron deficiency anaemia (IDA) and non-IDA in an elderly population. This is in agreement with the guidelines published in a recent study by Ioannou et al. where iron deficiency was defined as a serum ferritin level 45 µg/L.

In a recent single institution experience, all patients with serum ferritin levels below 30 µg/L were iron deficient by marrow examination as were the majority of hospitalized patients with serum ferritin levels 30 to 100 µg/L and approximately one-third of hospitalized patients with serum ferritin levels between 100 and 200 µg/L. Combining the serum ferritin level with other parameters such as erythrocyte sedimentation rate and C-reactive protein, did not improve its predictive value[61].

MATERIAL AND METHODS

This study was carried out in the department of Clinical Pathology on the patients admitted to Coimbatore Medical College Hospital, Coimbatore, during the period of February to August 2009.

INCLUSION CRITERIA

1. Patients with nonhaematological malignancies aged 19–69 years with Hb < 12 g/dL
2. Newly diagnosed
3. No prior chemo or radiotherapy and
4. No prior steroid administration.

EXCLUSION CRITERIA

1. Patients in relapse
2. Patients on chemo or radiotherapy
3. Prior surgery for the same and
4. Systemic illnesses like Cardiac, Renal or Hepatic disease (severe enough to affect haematopoisis).

SAMPLE SIZE

A total number of 40 inpatients with various nonhaematological malignancies were screened for anaemia. Based on Hb cut-off of 12 g/dL, 33 of them were recruited for the study. Since we receive about 1200 samples of nonhaematological malignancies in our department in a year, it represents about 2.75% of the incidence in our department.

METHODOLOGY

Newly diagnosed patients admitted to various surgical and gynaecological wards were randomly selected for the study as per the inclusion and exclusion criteria.

Detailed history was obtained from the patients regarding the present illness (malignancy), blood loss, haematemesis, malaena, haemoptysis, any bleeding or thrombotic tendency, appetite, vomiting, bowel habits, dyspnoea, bone pain, etc,. History of drug intake like aspirin or any previous treatment for anaemia were obtained. Tissue diagnosis either by biopsy or fine needle aspiration cytology was obtained for all the cases. Other investigations like CT , MRI and ultrasound scans and X ray films were scrutinized.

Patients were examined for nutritional status, tenderness over the bones, pathological fractures, pallor, cyanosis, paedal oedema, dyspnoea, clubbing, jaundice, lymphadenopathy, liver or spleen enlargement.

All the patients included in the study underwent the following investigations:

- Complete haemogram
- Peripheral smear study
- Liver function tests (SGOT, SGPT &Alkaline Phosphatase)
- Renal function tests (Blood Urea, Serum Creatinine)
- Blood sugar
- Urine analysis and
- Serum proteins.
- Serum iron, total iron binding capacity and serum ferritin.

Algorithm for investigation

Hb

Hb=/> 12 g/dL (excluded from the study)

Hb < 12 g/dL

(Recruited for the study)

Further investigations

Complete Haemogram was done using **Sysmex KX-21**, fully automated haematology analyzer (manufacturers: Sysmex Corporation, Japan).

DETECTION PRINCIPLE

This instrument performs blood cell count by DC detection method. Blood sample is aspirated, measured to a predetermined volume, diluted at the specified ratio, then fed into each transducer. The transducer chamber has a minute hole called the aperture. On both sides of the aperture, there are the electrodes between which flows direct current. Blood cells suspended in the diluted sample pass through the aperture, causing direct current resistance to change between electrodes. As direct current resistance changes, the blood cell size is detected as electric pulses.Blood cell count is calculated by counting the pulses, and a histogram of blood cell sizes is plotted by determining the pulse sizes. Also, analyzing a histogram makes it possible to obtain various analysis data.

Figure 3. Cell Counting Principle

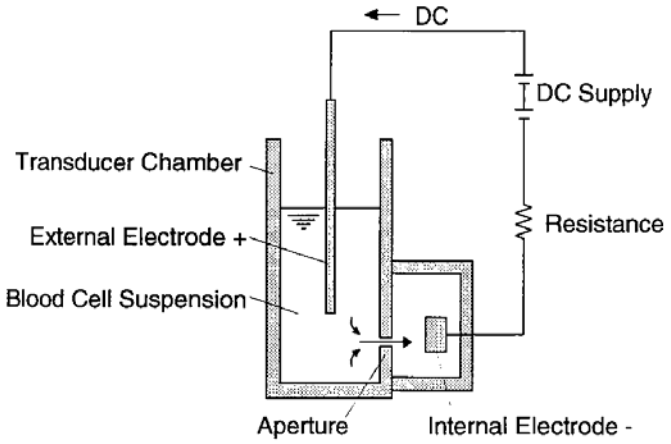

Figure 4 .RBC & Platelet Counting

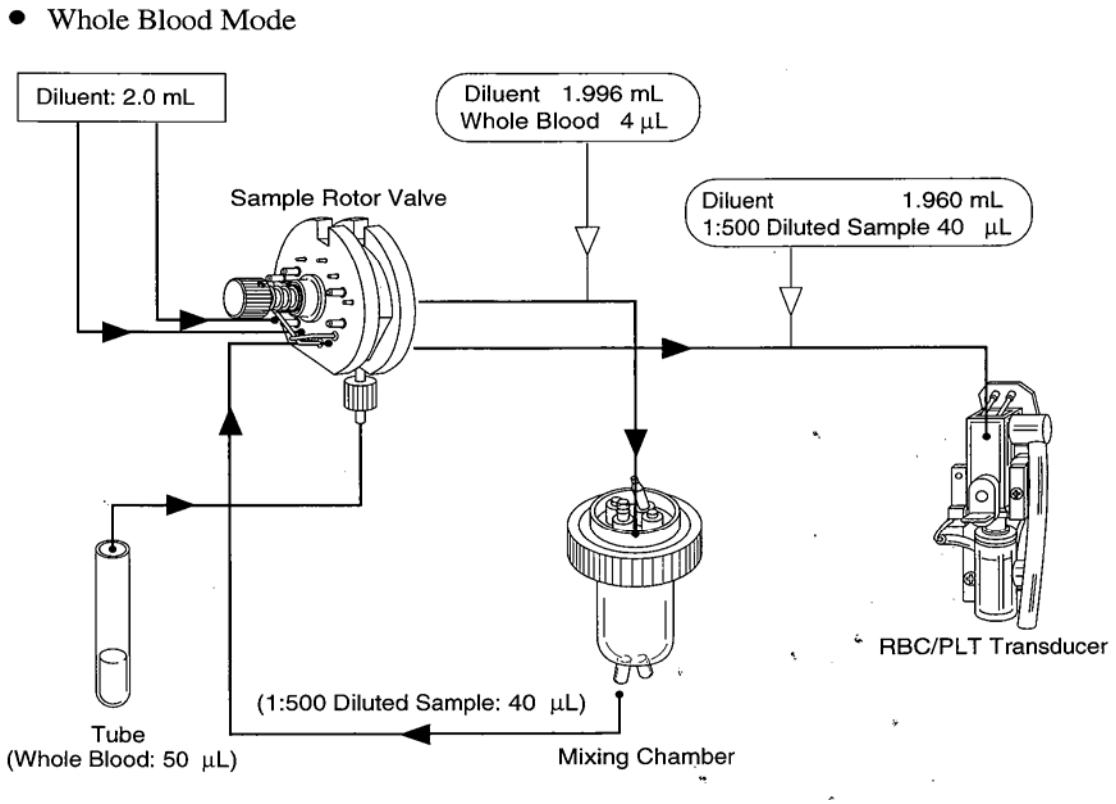

NON-CYANIDE HAEMOGLOBIN ANALYSIS METHOD

To analyze haemoglobin by automated methods, the Cyanmethaemoglobin method or Oxyhaemoglobin method have so far been the mainstream.

Cyanmethaemoglobin method was recommended as the international standard method in 1966 by ICSH (International Committee for Standardization in Haematology). This method, however, so low in haemoglobin conversion rate that it cannot be said an appropriate method in the automated process in which multi-sample processing is the precondition. In addition, this method uses the reagent of cyanide compound which is a poisonous substance and requires waste processing; thus it can hardly be called an environmentally favourable method. At present, this method cannot be said suitable for a fully automated instrument which is required to handle a large amount of waste.

The Oxyhaemoglobin method, on the other hand, is faster in haemoglobin conversion rate; in fact, blood haemoglobin is converted instantaneously into oxyhaemoglobin. Also, it does not contain poisonous substance as Cyanmethaemoglobin method, making this method suitable for automation. This method, however, is unable to convert methaemoglobin into oxyhaemoglobin. Consequently, when a great amount of methaemoglobin is contained as in control blood, lower than real values result, although usual human blood poses no problems.

Non-cyanide haemoglobin analysis method utilizes the advantages of both of the above methods. Non-cyanide haemoglobin analysis method rapidly converts blood haemoglobin as the oxyhaemoglobin method and contains no

poisonous substance, making it suitable for automated method. Being capable of analyzing methaemoglobin, this method, can accurately analyze control blood etc. which contain methaemoglobin.

Figure 5. WBC & Haemoglobin Estimation

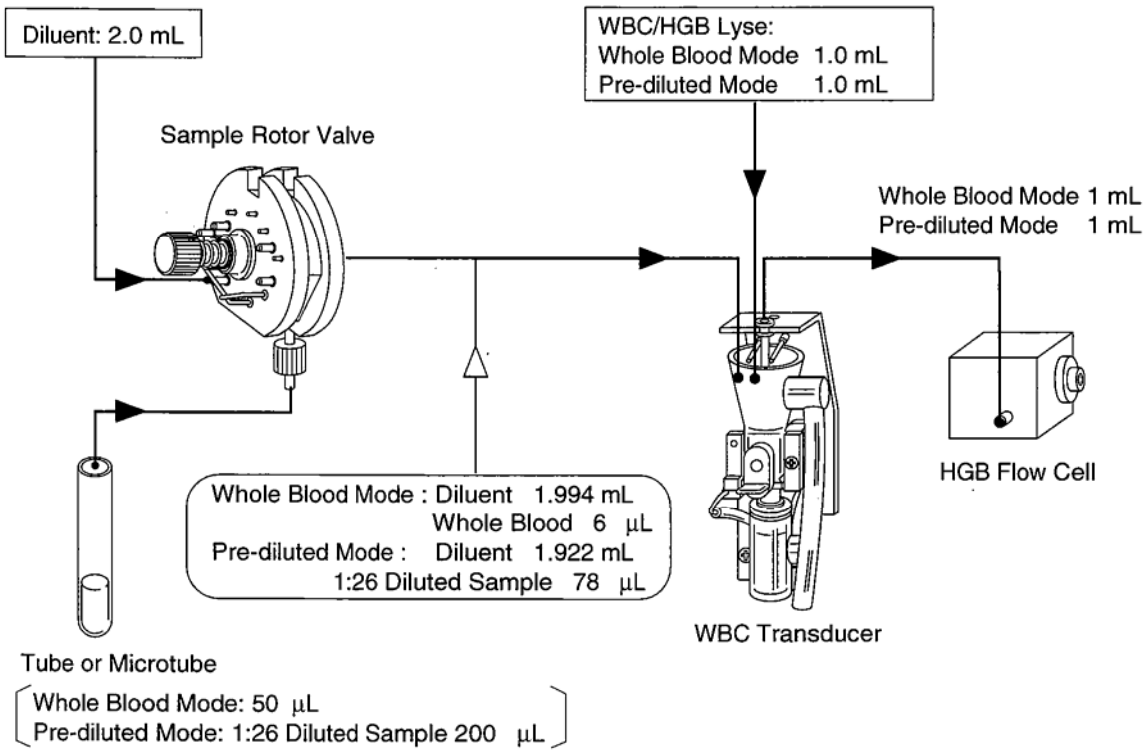

This instrument analyzes the following **parameters** using three detector blocks and two kinds of reagents:

1. Total WBC count in 1 μL of blood
2. LYM % : Ratio of lymphocytes to whole blood
3. MXD %: Ratio of summation of basophils, eosinophils and monocytes to whole WBC.
4. NEUT % : Ratio of neutrophils to whole WBC
5. LYM # : Absolute count of small cells in 1 μL of blood
6. MXD # : Absolute count of middle cells in 1 μL of blood

7. NEUT # : Absolute count of large cells in 1 μL of blood
8. RBC count in 1 dL of whole blood
9. HGB : Volume of haemoglobin in 1 dL of whole blood
10. HCT : Ratio of whole RBC volume in whole blood
11. MCV :Mean RBC volume, which is calculated by Hct/RBC
12. MCH : Mean Hb volume per RBC, which is calculated by Hb/RBC
13. MCHC : Mean RBC haemoglobin concentration, which is calculated by Hb/Hct
14. RDW – CV : RBC distribution width (%) calculated from the points defining 68.26% of the entire area spreading from the peak of the RBC particle distribution curve
15. RDW – SD: The distribution width (fL) at the height of 20% from the bottom when the peak RBC particle distribution curve is taken as 100%
16. PLT : Platelet count in 1 μL of blood PDW : The distribution width (fL) at the height of 20% from the bottom with the peak of platelet particle distribution curve
17. MPV : Mean platelet volume
18. P–LCR: Ratio of large platelet volume exceeding 12 fL to the platelet volume.

Histograms of WBC, RBC and Platelets can be calculated within the ranges given below:

- WBC : Approx. 30 -300 fL (particle after lyse dripping)
- RBC :Approx. 25 – 250 fL
- PLT : Approx. 2 – 30 fL.

Display range

- WBC 0.0 -299.9 X 10^3 µL
- RBC 0.00 – 19.99 X 10^6 µL
- Hb 0 – 25.0 g/dL
- Platelets 0 – 1999 X 10^3 µL

Reagent

- Diluent : CELLPACK
- WBC/HGB lyse reagent : STROMATOLYSER-WH
- Detergent : CELLCLEAN

The Sysmex KX-21 has two **quality control** methods.

1) In $\overline{X}$ control, control blood is analyzed twice and the mean of the two is used to evaluate analyzer performance
2) The Levy – Jennings control uses the data from a single control blood analysis to evaluate analyzer performance.

PRINCIPLE OF IRON & TIBC ESTIMATION

Iron, bound to transferrin, is released in an acidic medium and the ferric ions are reduced to ferrous ions. The Fe(II) ions react with Ferrozine to form a violet coloured complex. Intensity of the complex formed is directly proportional to the amount of iron present in the sample.

For TIBC, the serum is treated with excess of Fe(II) to saturate the iron binding sites on transferrin. The excess Fe(II) is adsorbed and precipitated and the Iron content in the supernatant is measured by spectrophotometry to give the TIBC.

$$Fe(III) \xrightarrow{\text{Acidic medium}} Fe(II)$$

$$Fe(II) + \text{Ferrozine} \longrightarrow \text{Violet coloured complex}$$

REFERENCE RANGE

RBC Count	4.50 – 5.90 million /mm^3 (men)*
RBCCount (women)*	4.00– 5.20 million /mm^3
Haematocrit	41 – 53 % (men)*
Haematocrit	36 – 46 % (women)*
Mean Corpuscular Volume	80 – 100 fL*
Mean Corpuscular Haemoglobin	26 -34 pg*
Mean Corpuscular Haemoglobin Concentration	31 – 37 g / dL*
Serum Iron	50 – 150 µg /dL*
Total Iron Binding Capacity	250 – 370 µg / dL*
Red Cell Distribution Width	39 – 46 fL #

*National Institute of Health, Adult Treatment Panel III, September 2002.

Dacie & Lewis Practical Haematology, 10th edition, Churchill Livingstone 2006.

OBSERVATION AND RESULTS

Newly diagnosed cases of nonhaematological malignancies admitted to our hospital with no prior chemo or radiotherapy or blood transfusion or cancer surgery were randomly enrolled. A total of 33 patients were enrolled as per the inclusion and exclusion criteria.

AGE

The mean age of the patients included in this study was 53.7 years. This study excluded patients aged below 19 years and above 69 years.

The median age was 53 years and the mode was 65 years.

Table 4. Age Incidence

Age Group	No.	Percent
19-40 Yrs	3	9.1
41-50 yrs	13	39.4
51-60 yrs	6	18.2
61-69 yrs	11	33.3
Total	33	100.0

There were two peaks of age incidence (41-50 and 60-69 years) (Tab-4).

SEX

Among the randomly enrolled 33 patients, 25 were women while the remaining 8 were men (Fig-6).

Figure 6.

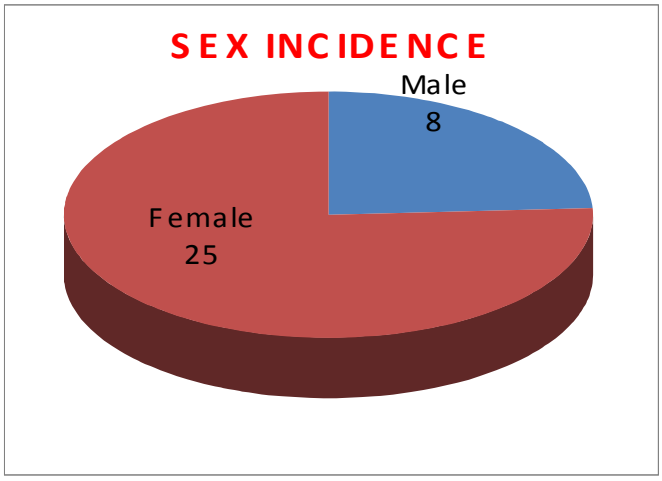

TYPE OF MALIGNANCIES

Among the eight male patients, four suffered from Gastrointestinal cancer, two suffered from lung cancer, one had metastatic cancer in cervical lymph nodes with unknown primary and the remaining one was a case of Ca penis (Fig-7).

Figure 7

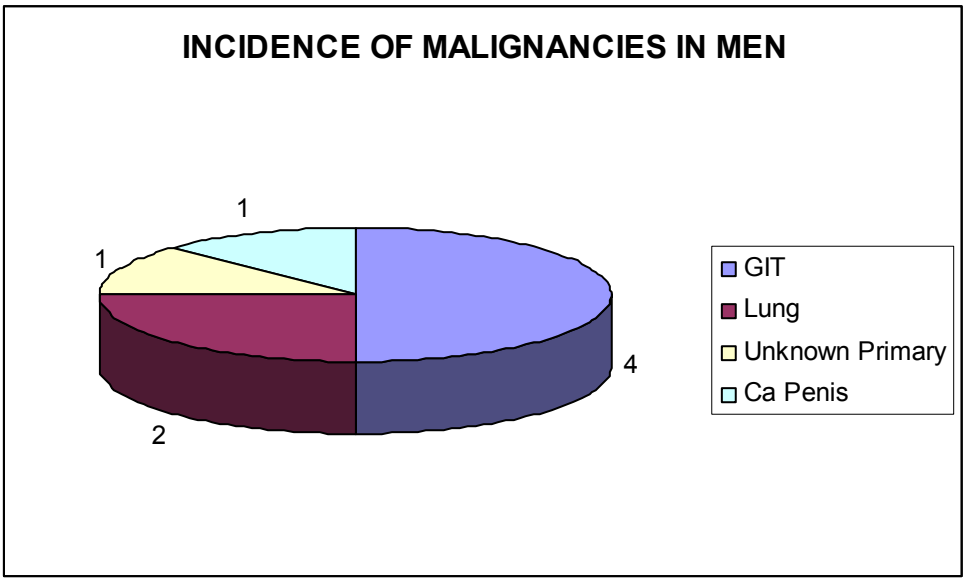

Among the 25 female patients, 11 suffered from Ca Breast, six suffered from Gastrointestinal malignancy, three had Ca Cervix, two had Ca Oral cavity, two were Ovarian malignancies, and one had metastatic cancer in cervical lymph nodes (Fig-8).

Figure 8

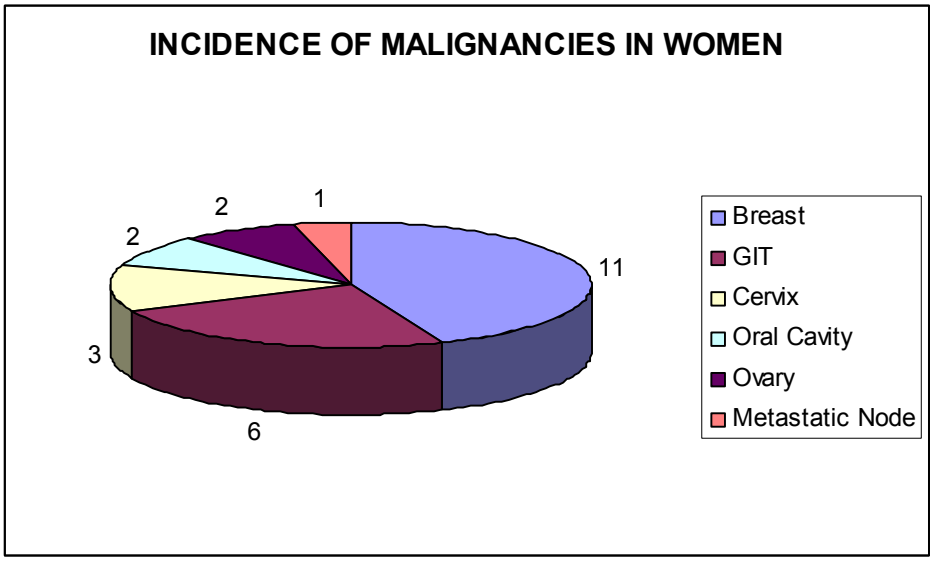

SEVERITY OF ANAEMIA

Mild anaemia (Hb 10 – 12 g /dL) was present in 22 cases, moderate anaemia (Hb 8 – 9.9 g/dL) in 8 cases and severe anaemia (Hb <8 g/dL) in 3 cases (Fig-9).

Figure 9

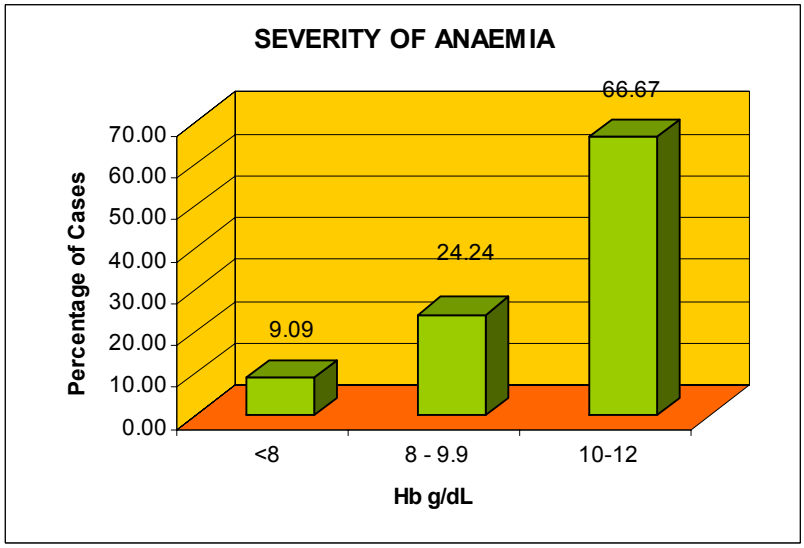

PERIPHERAL SMEAR STUDY

Out of the 33 peripheral smears studied, 70% (n=23) were normocytic normochromic (Fig 12, 13, 16 & 17), 21% (n= 7) were microcytic hypochromic (Fig 11, 15 & 18) and the remaining 9% (n=3) were normocytic hypochromic (Fig 14). No fragmented red cells or microspherocytes were noted in any of the smears (Fig-10).

Figure 10

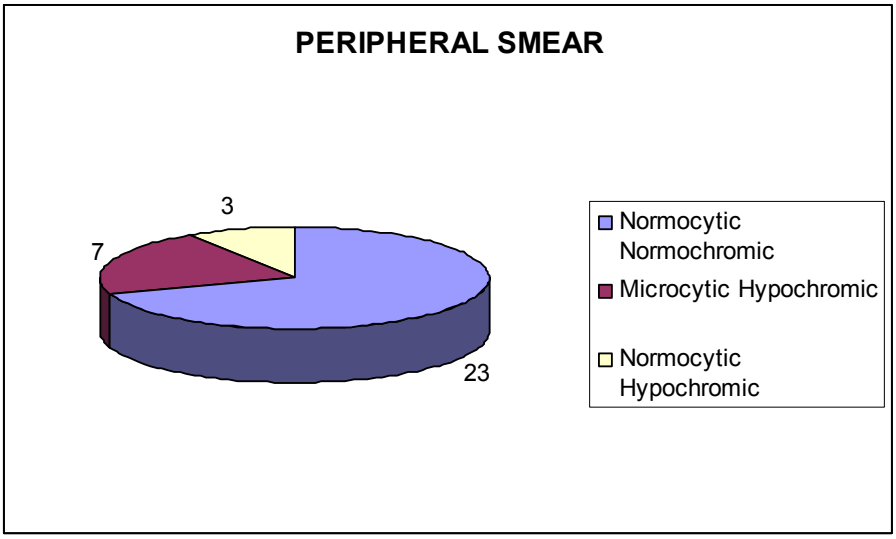

All patients had their Total and Differential WBC counts and Platelet counts checked and their Peripheral Smears examined. No evidence of Bone Marrow suppression or replacement was found.

All the 33 patients had normal liver and kidney function tests.

THE HAEMATOLOGICAL PARAMETERS OBSERVED

- No of patients with Hb <12 g/dL - 33
- RBC count - 3.83 million / µL
- Haemoglobin - 10.7 g/dL
- Haematocrit - 34.4%
- MCV - 84.9 fL
- MCH - 25.5 pg
- MCHC - 30.7 g/dL

Data are shown as Median.

RBC COUNT IN MEN

Seven out of eight men (87.5%) had reduced RBC count (Tab-5)

Table 5. RBC Count in Men

RBC million/µL	No.	Percent
< 4.5	7	87.5
4.5-5.9*	1	12.5
Total	8	100.0

*Normal range, National Institute of Health, USA, Adult Treatment Panel III, September 2002

RBC COUNT IN WOMEN

Fifteen women (60%) had reduced RBC counts in the present study (Tab-6).

Table 6. RBC Count in Women

RBC million/µL	No.	Percent
< 4	15	60.0
4 – 5.2*	10	40.0
Total	25	100.0

HAEMATOCRIT IN MEN

All the men in the present study had reduced haematocrit (Tab-7).

Table 7. Haematocrit in Men

HCT %*	No.	Percent
< 40	8	100.0

*Normal range (41.0 – 53.0%)

HAEMATOCRIT IN WOMEN

Twenty women (80%) had reduced haematocrit (Tab-8).

Table 8. Haematocrit in Women

HCT %	No.	Percent
< 36	20	80.0
36 – 46*	5	20.0
Total	25	100.0

MEAN CORPUSCULAR VOLUME

Reduced MCV was observed in 10 patients (30.3%) out of 33 cases (Tab-9).

Table 9. Mean Corpuscular Volume

MCV fL	No.	Percent
< 80	10	30.3
80 – 100*	23	69.7
Total	33	100.0

MEAN CORPUSCULAR HAEMOGLOBIN

Seventeen patients (51.5%) had reduced MCH in the present study (Tab-10).

Table 10. Mean Corpuscular Haemoglobin

MCH pg	No.	Percent
<26	17	51.5
26 – 34*	16	48.5
Total	33	100.0

MEAN CORPUSCULAR HAEMOGLOBIN CONCENTRATION

Eighteen patients (54.5%) had reduced MCHC in the present study (Tab-11).

Table 11. Mean Corpuscular Haemoglobin Concentration

MCHC g/dL	No.	Percent
< 31	18	54.5
31 – 37*	15	45.5
Total	33	100.0

RED CELL DISTRIBUTION WIDTH

Fifteen patients (45.5%) had increased RDW in the present study (Tab-12).

Table 12. Red Cell Distribution Width

RDW fL	No.	Percent
39 – 46#	18	54.5
> 46	15	45.5
Total	33	100.0

Dacie & Lewis[13]

SERUM IRON

In the present study, ten patients (30%) had serum iron <50 µg/dL (Tab-13).

Table 13. Serum Iron

Serum Iron µg/dL	No.	Percent
< 50	10	30
50-150*	23	70
Total	33	100.0

SERUM FERRITIN

In the present study, 16 patients (48.5%) had serum ferritin >50 ng/mL, 13 patients (39.4%) had serum ferritin between 12–50 ng/mL and the remaining four patients (12.1%) had <12 ng/mL of ferritin (Tab-14).

Table 14. Serum Ferritin Levels

Serum ferritin ng/mL ¥	No.	Percent
<12	4	12.1
12-50	13	39.4
>50	16	48.5
Total	33	100.0

¥ Wintrobe's Clinical Haematology[61] .

TOTAL IRON BINDING CAPACITY

TIBC was within normal range in 18 patients (54.55%), low in 11 patients (33.33%), and raised in four patients (12.12%) in the present study (Tab-15).

Table 15. Total Iron Binding Capacity

TIBC µg/dL	No.	Percent
< 250	11	33.33
250 – 370*	18	54.55
> 370	04	12.12
Total	33	100.0

* Normal range
National Institute of Health, USA,
Adult Treatment Panel III, Sep 2002.

AGEWISE STATISTICAL ANALYSIS

Mean Haemoglobin levels varied significantly based on age. When ANOVA test was conducted (F=3.246; P<0.05) the mean Hb level was highest in the age group of 41 – 50 years (10.78 g/dL) and lowest in the age group of 61– 69 years (9.04 g/dL) (Tab–16).

Table-16.Agewise Distribution of Haemoglobin

Age	Hb(g/dL)		
	Mean	S.D	No.
19-40 Yrs	10.73	.55	3
41-50 yrs	10.78	.97	13
51-60 yrs	10.20	1.10	6
61-69 yrs	9.04	2.02	11
TOTAL	10.09	1.56	33

Mean RBC count varied significantly based on age .When ANOVA test was conducted (F=3.089; P<0.05) the mean RBC count was highest in the age group of 19-40 years (4.42 million/mm^3) and lowest in the age group of 61–69 years (3.59 million/mm^3) (Table-17). .

Table-17. Agewise Distribution of RBC count (million/mm^3)

Age	RBC count		
	Mean	S.D	No.
19-40 Yrs	4.42	.74	3
41-50 yrs	4.10	.53	13
51-60 yrs	3.78	.43	6
61-69 yrs	3.59	.50	11
TOTAL	3.90	.57	33

Mean haematocrit varied significantly based on age .When ANOVA test was conducted (F=5.566; P<0.01) the mean haematocrit was highest in the age group of 19- 40 years (36.10%) and lowest in the age group of 61–69 years (29.59%) (Table-18).

Table-18. Agewise Distribution of Haematocrit

Age	HCT(%)		
	Mean	S.D	No.
19-40 Yrs	36.10	.56	3
41-50 yrs	34.78	2.17	13
51-60 yrs	32.50	3.26	6
61-69 yrs	29.59	4.82	11
TOTAL	32.75	4.11	33

Mean MCV did not vary significantly based on age .When ANOVA test was conducted (F=0.346; P>0.05) the mean MCV was highest in the age group of 51- 60 years (86.18fL) and lowest in the age group of 61– 69 years (82.86fL) (Table-19).

Table-19. Agewise Distribution of Mean Corpuscular Volume

Age	MCV(fL)		
	Mean	S.D	No.
19-40 Yrs	83.03	12.41	3
41-50 yrs	86.07	7.87	13
51-60 yrs	86.18	6.79	6
61-69 yrs	82.86	10.16	11
TOTAL	84.75	8.65	33

Mean MCH did not vary significantly based on age .When ANOVA test was conducted (F=1.614; P>0.05) the mean MCH was highest in the age group of 51 - 60 years (27.08 pg) and lowest in the age group of 19 - 40 years (22.60 pg) (Table-20).

Table-20. Agewise Distribution of Mean Corpuscular Haemoglobin

Age	MCH(pg)		
	Mean	S.D	No.
19-40 Yrs	22.60	1.92	3
41-50 yrs	26.90	3.27	13
51-60 yrs	27.08	2.88	6
61-69 yrs	25.20	4.22	11
TOTAL	25.98	3.60	33

Mean MCHC did not vary significantly based on age. When ANOVA test was conducted (F=1.559; P>0.05) the mean MCHC was highest in the age group of 51 - 60 years (31.38 g/dL) and lowest in the age group of 19 - 40 years (29.73 g/dL) (Table-21).

Table-21. Agewise Distribution of Mean Corpuscular Haemoglobin Concentration

Age	MCHC(g/dL)		
	Mean	S.D	No.
19-40 Yrs	29.73	1.05	3
41-50 yrs	31.26	1.17	13
51-60 yrs	31.38	1.10	6
61-69 yrs	30.27	2.13	11
TOTAL	30.82	1.59	33

Mean RDW did not vary significantly based on age. When ANOVA test was conducted (F=1.560; P>0.05) the mean RDW was highest in the age group of 61- 69 years (53.23fL) and lowest in the age group of 41 - 50 years (46.25fL) (Table-22).

Table-22. Agewise Distribution of Red cell Distribution Width

Age	RDW(fL)		
	Mean	S.D	No.
19-40 Yrs	46.87	2.74	3
41-50 yrs	46.25	5.55	13
51-60 yrs	47.48	3.31	6
61-69 yrs	53.23	12.47	11
TOTAL	48.85	8.51	33

Mean Iron levels did not vary significantly based on age. When ANOVA test was conducted (F=1.067; P>0.05) the mean serum iron level was highest in the age group of 51- 60 years (73.02 µg/dL) and lowest in the age group of 19-40 years (40.75 µg/dL) (Table-23).

Table-23. Age wise Distribution of Serum Iron (µg/dL)

Age	Serum Iron		
	Mean	S.D	No.
19-40 Yrs	40.75	16.01	3
41-50 yrs	64.97	36.77	13
51-60 yrs	73.02	42.06	6
61-69 yrs	52.24	16.19	11
TOTAL	59.99	31.28	33

Mean TIBC did not vary significantly based on age. When ANOVA test was conducted (F=0.292; P>0.05) the mean TIBC was highest in the age group of 51- 60 years (304.32 µg/dL) and lowest in the age group of 41-50 years (274.30 µg/dL) (Table-24).

Table-24. Agewise Distribution of TIBC (µg/dL)

Age	TIBC		
	Mean	S.D	No.
19-40 Yrs	288.00	69.20	3
41-50 yrs	274.30	45.00	13
51-60 yrs	304.32	89.62	6
61-69 yrs	285.59	70.87	11
TOTAL	284.77	63.25	33

Mean Ferritin levels did not vary significantly based on age. When ANOVA test was conducted (F=0.051; P>0.05) the mean ferritin was highest in the age group of 61- 69 years (97.49 ng/mL) and lowest in the age group of 41-50 years (81.59 ng/mL) (Tab-25).

Table-25. Agewise Distribution of Serum Ferritin (ng/mL)

Age	Ferritin		
	Mean	S.D	No.
19-40 Yrs	93.93	59.41	3
41-50 yrs	81.59	59.81	13
51-60 yrs	88.68	61.86	6
61-69 yrs	97.49	152.28	11
TOTAL	89.30	97.24	33

GENDERWISE STATISTICAL ANALYSIS

Mean Haemoglobin levels did not vary significantly between men and women. When t-test was applied (t=1.232; P>0.05)) the average Hb in men was 9.50 g/dL whereas for women it was 10.28 g/dL (Tab–26).

Table-26. Distribution of Haemoglobin in both sexes

Sex	Hb(g/dL)		
	Mean	S.D	No.
Male	9.50	1.67	8
Female	10.28	1.51	25
TOTAL	10.09	1.56	33

Mean RBC count did not vary significantly between men and women. When t-test was applied (t=0.075; P>0.05)) the average RBC count in men was 3.89 million/mm^3 whereas for women it was 3.91 million/mm^3 (Tab-27).

Table-27. Distribution of RBC count(million/mm^3) in both sexes

Sex	RBC count		
	Mean	S.D	No.
Male	3.89	.72	8
Female	3.91	.53	25
TOTAL	3.90	.57	33

Mean Haematocrit did not vary significantly between men and women. When t-test was applied (t=1.463; P>0.05)) the average HCT in men was 30.94% whereas for women it was 33.34% (Tab-28).

Table-28. Distribution of Haematocrit(%) in both sexes

Sex	HCT		
	Mean	**S.D**	**No.**
Male	30.94	4.25	8
Female	33.34	3.97	25
TOTAL	32.75	4.11	33

Mean MCV did not vary significantly between men and women. When t-test was applied (t=1.625; P>0.05)) the average MCV in men was 80.53fL whereas for women it was 86.10fL (Tab-29).

Table-29. Distribution of MCV in both sexes

Sex	MCV(fL)		
	Mean	**S.D**	**No.**
Male	80.53	9.83	8
Female	86.10	7.99	25
TOTAL	84.75	8.65	33

Mean MCH did not vary significantly between men and women. When t-test was applied (t=1.147; P>0.05) the average MCH in men was 24.71 pg whereas for women it was 26.38 pg (Tab-30).

Table-30. Distribution of MCH in both sexes

Sex	MCH(pg)		
	Mean	S.D	No.
Male	24.71	4.06	8
Female	26.38	3.43	25
TOTAL	25.98	3.60	33

Mean MCHC did not vary significantly between men and women. When t-test was applied (t=0.535; P>0.05) the average MCHC in men was 30.55 g/dL whereas for women it was 30.90 g/dL (Tab-31).

Table-31. Distribution of MCHC in both sexes

Sex	MCHC(g/dL)		
	Mean	S.D	No.
Male	30.55	1.85	8
Female	30.90	1.54	25
TOTAL	30.82	1.59	33

Mean RDW did not vary significantly between men and women. When t-test was applied (t=1.440; P>0.05) the average RDW in men was 52.56 fL whereas for women it was 47.67 fL (Tab-32).

Table-32. Distribution of RDW in both sexes

Sex	RDW(fL)		
	Mean	**S.D**	**No.**
Male	52.56	11.34	8
Female	47.67	7.28	25
TOTAL	48.85	8.51	33

Mean serum iron levels did not vary significantly between men and women. When t-test was applied (t=1.428; P>0.05) the average serum iron in men was 46.46 µg/dL whereas for women it was 64.32 µg/dL (Tab -33).

Table-33. Distribution of serum iron (µg/dL) in both sexes

Sex	Serum Iron		
	Mean	**S.D**	**No.**
Male	46.46	14.61	8
Female	64.32	34.09	25
TOTAL	59.99	31.28	33

Mean TIBC did not vary significantly between men and women. When t-test was applied (t=1.134; P>0.05) the average TIBC in men was 306.75 µg/dL whereas for women it was 277.73 µg/dL (Tab-34).

Table-34. Distribution of TIBC in both sexes

Sex	TIBC(µg/dL)		
	Mean	S.D	No.
Male	306.75	70.63	8
Female	277.73	60.55	25
TOTAL	284.77	63.25	33

Mean Ferritin did not vary significantly between men and women. When t-test was applied (t=0.725; P>0.05) the average ferritin in men was 67.45 ng/mL whereas for women it was 96.29 ng/mL (Tab-35).

Table-35. Distribution of serum ferritin in both sexes

Sex	Ferritin (ng/mL)		
	Mean	S.D	No.
Male	67.45	67.52	8
Female	96.29	105.20	25
TOTAL	89.30	97.24	33

DISCUSSION

AGE INCIDENCE

In the Australian Cancer Anaemia Survey, the median age of the participants was 60 years (Table-36). The median age of patients in the present study was 53 years. This could be explained by two factors. Firstly, the present study consists of an overwhelming proportion of female patients (72.5%) who have an early peak of cancer incidence. Secondly, the present study excluded patients older than 69 years.

Table – 36. Age Incidence

S No	Study	Median	Mean	Range
1	ACAS	60	59.7	19-90
2	POLCAS	56	54.8	>=18
3	ECAS	-	59.0	18-96
4	Present Study	53	53.7	19-69

In the present study, the mode was 65 years of age. This correlates with the statistics compiled from the National Cancer Institute Surveillance, Epidemiology, and End Results (SEER) program which indicate the incidence of cancer among individuals >= 65 years of age is 2,261.0 per 100,000 as compared with only 207.3 per 100,000 for those 65 years[62].

Marimuthu P, NIMHANS, Bangalore, in his projection of cancer incidence in five major Indian cities for the year 2008 (Fig-1), has stated that males from Chennai would have an increasing trend from the age of 50 to 69 years and females from Chennai might have more number of cases from 45 to 65 years of age[63].

In the present study, there are two peaks in age incidence (41-50 and 60-69). This may be due to the fact that women constitute the majority (75.8%) of the study population and it correlates with the age incidence for women in five major Indian cities (Fig-2) projected by Marimuthu P[63]

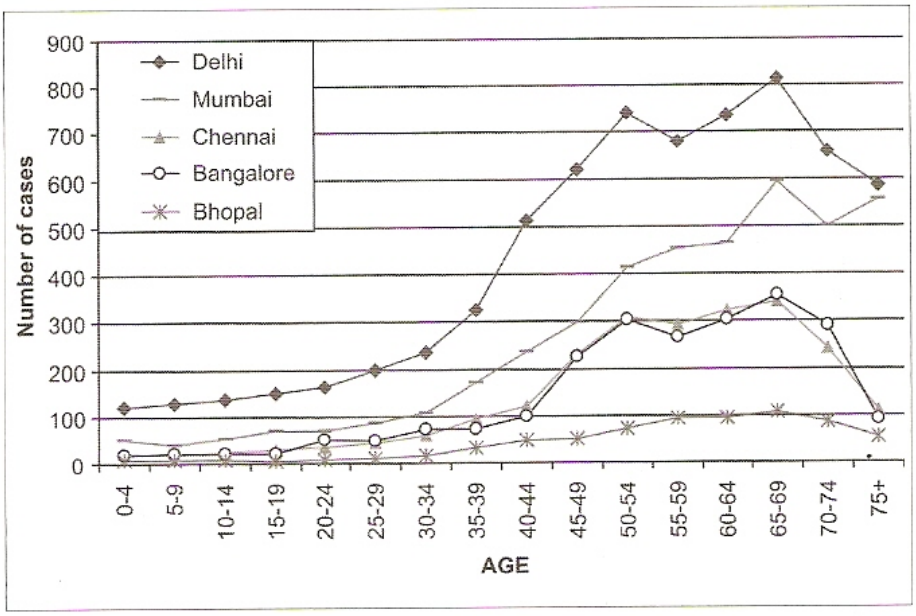

Figure 1: Estimated cancer incidence of males in five cities - 2008

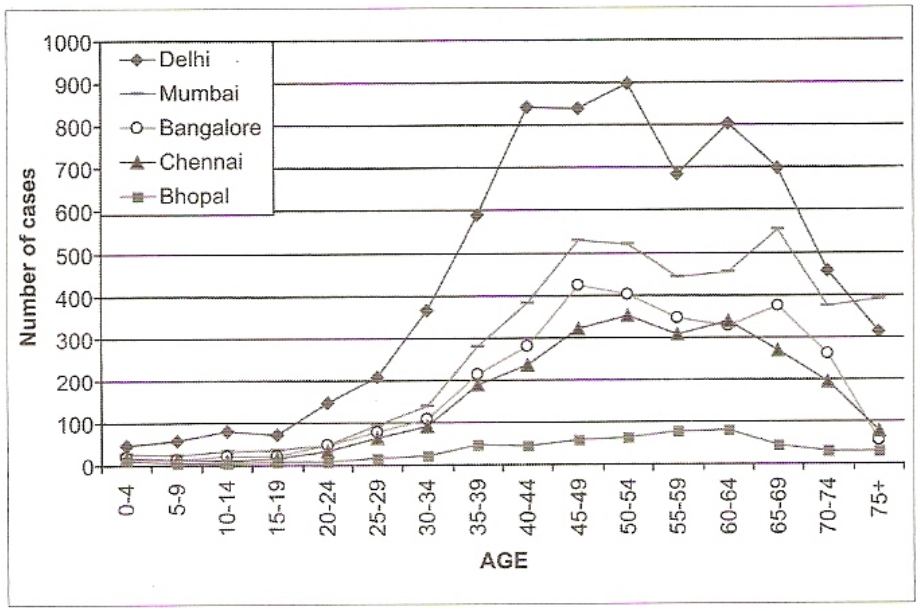

Figure 2: Estimated cancer incidence of females in five cities - 2008

SEX INCIDENCE

In the Australian Cancer Anaemia Survey, 61.2% of the patients were women. In ECAS women accounted for 56.4% of the study group.The Indian Council of Medical Research's population-based cancer registry data of 1982-84 shows that the total number of incident cases in males were 0.29 million and in females the incident cases of cancer were 0.32 million. The present study, with randomly selected patients has 72.5% of women reflecting the general trend of female preponderance.

INCIDENCE OF MALIGNANCY OF VARIOUS ORGANS

The distribution of cancer types varies from country to country, and differences are most marked between developed and developing countries. For example, among men in developed countries prostate cancer is the second most common cancer and colorectal cancer the third most common cancer. Among men in developing countries, however, gastric cancer and liver cancer are the second and third most common cancers, after lung cancer. Among women, breast cancer is the most common cancer in developed and developing countries, but cervical cancer is the second most common cancer in developing countries, whereas colorectal, lung, stomach, and endometrial cancers exceed cervical cancer cases in developed countries[64].

In our department oral, ENT, oesophagus, gastrointestinal tract, skin, penis and liver were the most common malignancies among male patients in 2008. The small sample of the present study roughly reflects the incidence of our department.

Among female patients, carcinoma cervix, breast, oral, ENT, oesophagus, stomach, and ovary were the most common malignancies in our department in 2008. The present study generally reflects the same trend.

In POLCAS breast cancer patients accounted for 21.49% of the study population. In ECAS 21.8% and in ACAS 26.8% had breast cancer. In the present study, breast cancer accounted for 30.3% of the study population.

SEVERITY OF ANAEMIA

In the European Cancer Anaemia Survey (ECAS), anaemia was categorized as mild (Hb 10 -11.9 g/dL), moderate (Hb 8 – 9.9 g/dL) or severe (Hb < 8 g/dL) based on the Common Toxicity Criteria, National Cancer Institute, USA and the European Organization for Research and Treatment of Cancer (EORTC). In ECAS study, among anaemic patients, 8.9% had severe anaemia, 49.2% had moderate and 41.9% had mild anaemia.

In the Australian Cancer Anaemia Survey (ACAS), 78% of the anaemic patients had mild anaemia (Hb 10 -11.9 g/dL) at enrolment (Table – 37).

In the present study, among anaemic patients, 66.67% had mild anaemia, 24.24% had moderate and another 9.09% had severe anaemia. The pattern of severe degree of anaemia generally reflects that of the Europe. Proportion of patients with moderately severe anaemia was a little less when compared to ECAS.

Table – 37. Severity Of Anaemia

S.No	Series	Mild	Moderate	Severe
1	ECAS	41.9	49.2	8.9
2	ACAS	78	22	
3	POLCAS	82.1	16.2	1.7
4	Present Study	66.67	24.24	9.09

Out of the 11 patients with carcinoma of breast, 10 had mild anaemia and the remaining patient had moderate degree of anaemia.

HAEMATOLOGICAL PARAMETERS

In the present study, the median values of MCV (84.9) and MCHC (30.7) obtained were lower than those obtained in European cancer patients (Table – 38). But the median values of the RBC count (3.83 million / µL), haemoglobin (10.7 g/dL) and Haematocrit (34.4%) were higher. This may be due the highly prevalent iron deficiency in Indian women (the present study has more female patients), the different case mix and age restriction of the present study, undetected haemoglobinopathies etc. contributing to the variation in the haematological parameters in the present study.

Table – 38. Haematological Parameters

S.No	Parameter #	ECAS*	Present Study
1	RBC (10^6 / µL)	3.3	3.83
2	Hb (g/dL)	9.6	10.7
3	HCT (%)	29.6	34.4
4	MCV (fL)	89	84.9
5	MCHC (g/dL)	33	30.7

* The European Cancer Anaemia Survey
# Data are given as median

CORRELATION OF HAEMATOLOGICAL PARAMETERS

In the present study, mean Hb, RBC count, Haematocrit, MCV, MCH and MCHC were lower in men and these values varied more widely in men. Mean RDW was higher in men and RDW varied more widely in men. Mean serum iron and mean serum ferritin were higher in women and mean TIBC was lower in women. These findings indicate that iron deficiency predominates over other factors in the causation of anaemia in male cancer patients in the present study.

Mean Haemoglobin, RBC count, Haematocrit, and MCV were the lowest in above 60 years age group. Mean RDW was the highest in above 60 years age group.

Mean MCH, MCHC and mean serum iron were the lowest in 40 years or below age group.

In the present study, 12 patients had both reduced MCH and reduced MCHC. Among them only six patients had reduced serum iron. This is explained by the fact that the red cell indices are mainly helpful in detecting mild or early red cell abnormalities. In severe anaemias, peripheral blood smear is sufficiently characteristic and red cell indices do not provide additional information.

In the present study, 17 patients had serum ferritin levels <50 ng/mL. Among them eight patients had both MCH and MCHC reduced, six patients had either MCH or MCHC reduced and the remaining three had both MCH and MCHC in the normal range.

In the present study of cancer patients with anaemia, RBC counts were within the normal range in 11 patients. The red cell count can be in the normal range in people who are anaemic on the basis of the haemoglobin level when the red cells are microcytic, as in thalassemia minor or iron deficiency[11].

In the present study, six patients had reduced MCV and increased RDW indicating iron deficiency. Among these patients three had serum ferritin levels less than 12 ng/mL, two had serum ferritin between 12 and 50 ng/mL and one patient had ferritin level more than 50 ng/mL.

Haematocrit was within normal range in five women in the present study. All of them had mild anaemia, normal red cell count and normal serum iron. Among them, in only one patient, MCV, MCH and MCHC were within the normal range. The others had atleast one parameter reduced. This again proves the utility of red cell parameters as indicators of early or mild red cell change.

CORRELATION OF PERIPHERAL SMEAR WITH OTHER PARAMETERS

In the present study, out of the seven microcytic hypochromic peripheral smears, six were accounted for by Carcinoma of oesophagus and stomach and the remaining one by Carcinoma of breast.

In the present study, out of the eleven cases of carcinoma of breast, nine had normocytic normochromic, one had normocytic hypochromic and the other had microcytic hypochromic peripheral smears.

In the present study, ten patients had reduced MCV while seven of them had microcytic hypochromic peripheral smears. Other smears also had microcytes in varying proportions.

In the present study 17 patients had reduced MCH, Among them, only seven peripheral smears were microcytic hypochromic and three others were normocytic hypochromic. The remaining seven smears were predominantly normocytic normochromic but also had hypochromic microcytes in varying proportions. This proves that red cell indices are mainly helpful in detecting mild or early red cell abnormalities and peripheral smear is sufficiently characteristic in severe anaemias.

The peripheral smear picture correlated well with serum ferritin levels in the present study. Four patients had serum ferritin levels < 12 ng/mL, all of them had microcytic hypochromic peripheral smear.

In the present study, 17 patients had serum ferritin < 50 ng / mL indicating most probable iron deficiency. Among them, 11 patients had normocytic normochromic, five had microcytic hypochromic and the remaining one had normocytic hypochromic peripheral smears.

Out of the three patients with Hb <8g/dL, two had microcytic hypochromic smears while the other had mainly normocytic normochromic picture with many microcytes.

Out of the seven patients with microcytic hypochromic peripheral smears, only two had reduced serum iron levels.The remaining five patients had serum iron levels between 50 and 70/ µg/dL.

DIFFERENTIAL DIAGNOSIS

A number of different factors can contribute to the development of anaemia in malignancy, and it is common for several factors to operate in patients with malignancy. The type of anaemia depends on the dominant

underlying mechanism or mechanisms, and the most important are blood loss, chronic inflammatory-like response, infection, inadequate nutrition, bone marrow suppression, impaired renal function, and haemolysis.

In the present study, all the patients had normal renal function tests. No evidence of bone marrow suppression or haemolysis was observed in any of the patients. History, Clinical examination, Complete Blood Count and other investigations did not reveal infection in any patient studied except only one (patient ID: 35671). She had carcinoma of breast with skin ulceration and infection.

Much of the anaemia commonly observed in patients with cancer can be attributed to the mechanisms involved in the anaemia of chronic disease. The main differential diagnosis is iron deficiency anaemia[61].

Table – 39. Serum Values To Differentiate Anaemia Of Chronic Disease From Iron Deficiency Anaemia

Test	Anaemia of chronic disease	Iron deficiency anaemia	Both
Iron	↓		
Transferrin(TIBC)	↓ ↔	↑	↓
Ferritin	↔ ↑	↓	↓ ↔

In the present study, only four patients had raised TIBC (>370µg/dL). Among them, three had reduced serum ferritin (<50 ng/mL) indicating depletion of body iron stores while the remaining one had raised serum ferritin.

In the present study, out of the 11 cases with reduced TIBC, all had serum ferritin above 12 ng/mL. Seven patients had reduced serum iron, reduced TIBC and normal serum ferritin indicating that anaemia of chronic disease was a significant contributing factor in the development of anaemia in them (Table-39).

Out of the ten patients with reduced serum iron levels, six had reduced serum ferritin levels (<50 ng/dL) three had normal and the remaining one had elevated serum ferritin levels. This is explained by the fact that low serum iron concentrations are found in iron deficiency anaemia, anaemia of chronic disease, and during the acute-phase response, including after surgery. Therefore, low serum iron concentrations do not necessarily indicate an absence of storage iron[13].

Out of the 17 patients with reduced serum ferritin (<50 ng/mL), only six patients had reduced serum iron levels. This is explained by the fact that serum iron level falls after the iron stores are depleted and other factors also contribute to the development of anaemia in these cancer patients with normal serum iron.

SUMMARY AND CONCLUSION

- In the present study, the mode of age incidence was 65 years. The median age was 53 years and the mean was 53.7 years.
- Out of the 33 patients studied, 72.5% were women. Breast cancer accounted for 30.3% of the total cases studied.
- Mild anaemia was observed in 66.67% of the patients while 24.24% had moderate and 9.09% had severe anaemia.
- The following median values were obtained: RBC count – 3.83 million/mm^3, Haemoglobin – 10.7 g/dL, Haematocrit – 34.4%, MCV – 84.9 fL, and MCHC – 30.7 g/dL.
- Mean Hb, RBC count, Haematocrit, MCV, MCH and MCHC were lower in men. Mean RDW was higher in men.
- Mean serum iron and mean serum ferritin were higher in women and mean TIBC was lower in women.
- Out of the 11 cases with reduced TIBC, all had serum ferritin above 12 ng/mL. Seven patients had reduced serum iron, reduced TIBC and normal serum ferritin indicating that anaemia of chronic disease was a significant contributing factor in the development of anaemia in them.
- Twelve patients had both MCH and MCHC reduced. Among them only six patients had reduced serum iron proving that red cell parameters are indicators of early or mild red cell change.
- In the present study of cancer patients with anaemia, RBC counts were normal in 33% of patients (occurs in iron deficiency anaemia and thalassaemia syndromes).

- 18% of patients had reduced MCV and increased RDW (occurs in iron deficiency).

Anaemia was consistently observed in nonhaematological malignancies in all age groups. Normocytic normochromic anaemia was most commonly seen. Red cell indices and serum iron, TIBC and serum ferritin were found to be useful parameters in precise assessment of anaemia and its type. Bone marrow suppression, haemolysis and abnormal renal / liver functions were not observed. This study proves that a number of different factors contribute to the development of anaemia in malignancy, and it is common for several factors to operate in patients with malignancy. The type of anaemia depends on the dominant underlying mechanism or mechanisms.

In view of the potential benefits of treating anaemia, it is hoped that comprehensive management of anaemia in malignancies will receive more attention in the future.

BIBLIOGRAPHY

1) http://www.prnewswire.co.uk/cgi/news/release?id=130577

2)http://www3.interscience.wiley.com/journal/84002245/abstract?CRETRY=1&SRETRY=0

3) Louis Harrison, Kimberly Blackwell: Hypoxia and anaemia: Factors in decreased sensitivity to radiation therapy and chemotherapy. The Oncologist 2004; 9(suppl 5):31-40.

4) http://www.suite101.com/article.cfm/new_cancer_treatments/110167.

5) Anemia: A Hidden Epidemic. A handbook of National Anemia Action Council, Health Vizion Communications Inc. 2002.

6) Louis B, Daniel Shasha, Peter Homel: Prevalence of anaemia in cancer patients undergoing radiotherapy: Prognostic significance and treatment. Oncology 2002; 63 (suppl 2): 11-18.

7) C Bokemeyer, and H Ludwig: Severity of anaemia in solid tumours. Anaemia in cancer; Second edition, European School of Oncology Scientific Updates, Elsevier publication 2005.

8) Michael S Gordon: Managing anaemia in cancer patient: Old problems, future solutions. The Oncologist, Vol 7, N o. 4, 331-341, August 2002.

9) Dominique Bron, Natalie Meuleman and Cecile Mascaux: Biological basis of anaemia. Semin Oncol Vol 28, suppl 8, April 2001, 1-6.

10) C Robertson, P Boyle and D C Kerr: Determinants of anaemia in cancer patients receiving chemotherapy. J Clin Oncol 2004, Vol 22, No 14S:9719.

11) de Gruchy's Clinical Haematology in Medical Practice, edited by Frank Firkin, Colin Chesterman, David Penington and Bryan Rush, Fifth Edition, Wiley India 1989.

12) Stefan D Anker and Stephan von Haeling: Anaemia in chronic heart failure. First Edition, Unimed 2009, 27-31.

13) Dacie and Lewis Practical Haematology , edited by S Mitchell Lewis, Barbara J Bain and Imelda Bates, tenth edition, Churchill Livingstone 2006.

14) Vincent T, De Vita et al. Cancer, principles and practice of oncology. Seventh edition LWW.

15) Fauci, Braunwald, Kasper et al. Harrison's principles of internal medicine,17th edition, 2008, Mc Graw Hill.

16) Etienne Joosten. Strategies for the lab diagnosis of some common causes of anaemia in elderly patients. Gerontology 2004; 50:49-56

17) http://www.doctorslounge.com/hematology/labs/iron.htm

18) Guenter Weiss and Lawrence T Goodnough: Anaemia of chronic disease. N Engl J Med 2005; 352: 1011 – 23.

19) Guralnik JM, Eisensteadt RS, Ferruci L, Woodman RC et al. The prevalence of anaemia in persons age 65 and older in the US: Evidence for a high rate of unexplained anaemia. Blood 2004; 104:2263 – 8.

20) Ramdeen B and Portenoy R. Prevalence of anaemia in cancer patients undergoing radiation therapy. Semin Oncol 2001; 28: 54 – 9.

21) http://www.roche.com/home/media/med_div/med_div_pharma/med_pha_2006/med-div-2

22) David Gordon, Gwen Nichols et al. Treating anaemia of cancer with every 4 week Darbepoetin alfa: Final efficacy and safety results from a phase II randomized, double blind placebo controlled study. The Oncologist Vol 13, No 6, 715-724, June 2008

23) Bohlius J, Wilson J, Seidenfeld J et al. Recombinant human erythropoietins and cancer patients: Updated meta-analysis of 57 studies including 9353 patients. J Natl Cancer Inst 2006; 98: 708 – 714.

24) H Lugwig, E Ftitz, C Leitgeb,et al. Erythropoietin treatment for chronic anaemia of selected haematological malignancies and solid tumours. Annals of Oncology 4:161-167,1993.

25)http://www.ncbi.nlm.nih.gov/pubmed/12973399?ordinalpos=1&itool=EntrezSystem2.PEnt...

26) http://effectivehealthcare.ahrq.gov/repFiles/EPO%20Final.pdf

27) Bennett-Guerrero E, Veldman TH, Doctor A ET AL. Evolution of adverse changes in stored RBCs. Proc Natl Acad Sci USA 2007; 104: 17063 – 17068.

28) Enrico Cortesi, Andrea Mancuso, Adolfo De Pasquale et al. Effectiveness and safety of an induction therapy with epoetin alfa in anaemic cancer patients receiving concomitant chemotherapy. The Oncologist Vol 9, No 4, 459 – 468, July 2004.

29) Jean-Philippe Spano and David Khayat. Treatment options for anaemia, Taking risks into consideration: Erythropoiesis – stimulating agents versus Transfusions. The Oncologist, Vol 13, No suppl_3, 27 – 32, May 2008.

30) Joachim Fandrey. Erythropoietin receptors on tumour cells: What do they mean? The Oncologist, Vol 13, No suppl_3, 16 – 20, May 2008.

31) Henke M, Laszig R, Rube C et al. Erythropoietin to treat head and neck cancer patients with anaemia undergoing radiotherapy: Randomized, double-blind, placebo controlled trial. Lancet 2003; 362: 1255-1260.

32) Khuri FR. Weighing the hazards of erythropoiesis stimulation in patients with cancer. New Eng J Med 2007; 356: 2445-2448.

33) Farrell F, Lee A. The erythropoietin receptor and its expression in tumour cells and other tissues. The Oncologist 2004; 9 (suppl 5): 18-30.

34) Sinclair AM, Todd MD, Forsythe K et al. Expression and function of erythropoietin receptors in tumours.: Implications the use of ESAs in cancer patients. Cancer 2007; 110: 477-488.

35) Sizer KC. Heat shock protein 70, erythropoietin, and cancer. J Clin Oncol 2007; 25: 4326. author reply 4326-4327.

36) Matti S Aapro, Hartmut Link. September 2007 update on EORTC guidelines and anaemia management with ESAs. The Oncologist, Vol 13, No suppl_3, 33-36, May 2008.

37)www.hematology.utoronto.ca/…/ Mang.+ of+Anemia+ of+Malignancy.pdf

38) Grogan M, Thomas GM, Melamed I et al. The importance of haemoglobin levels during radiotherapy for carcinoma of the cervix. Cancer 1999; 86:1528-1536

39) Lee WR, Berkey B, Marcial V et al. Anaemia is associated with decreased survival and increased locoregional failure in patients locally advanced head and neck carcinoma: a secondary analysis of RTOG 85-27. Int J Radiat Oncol Biol Phys 1998; 42:1069-1075

40) Vogelzang NJ, Breitbart W, Cella Det al. Patient, caregiver and oncologist perceptions of cancer-related fatigue: results of a tripart assessment survey. Int J Radiat Oncol Biol Phys 1997; 34:4-12

41) Fyles AW, Milosevic M, Wong Ret al. Oxygenation predicts radiation response and survival in patients with cervix cancer. Radiotherapy and Oncology 1998; 48: 149-156

42) Louis B Harrison, Manjeet Chadha et al. Impact of tumour hypoxia and anaemia on radiation therapy outcomes. The Oncologist Vol 7, No 6, 492-508, December 2002

43) Bush RS. The significance of anaemia in clinical radiation therapy. Int J Radiat Oncol Biol Phys 1986; 12: 2047-2050

44) Fein DA, Lee r, Hanlon AL et al. Pretreatment haemoglobin level influences local control and survival of T1-T2 squamous cell carcinomas of the glottic larynx. J Clin Oncol 1995; 13: 2077-2083.

45) Warde P,O'Sullivan B,Bristow RG et al. T1-T2 glottic cancer managed by external beam radiotherapy: the influence of pretreatment hemoglobin on local control. Int J Radiat Oncol Biol Phys 1998; 41: 347-353

46) Girinski T, Pejovic-Lenfant MH, Bourhis Jet al. Prognostic value of hemoglobin concentrations and blood transfusions in advanced carcinoma of the cervix treated by radiation therapy: results of a retrospective study of 386 patients. Int J Radiat Oncol Biol Phys 1989; 16: 37-42

47) Haffty BG, Son YH, Papac R et al. Chemotherapy as an adjunct to radiation in the treatment of squamous cell carcinoma of the head and neck: results of the Yale Mitomycin Randomized Trials. J Clin Oncol 1997; 15: 268-276

48) Martinez J, Cabezon M, Fuentes C et al. Hyperfractionated chemotherapy with carbogen breathing for advanced head and neck cancer. Int J Radiat Oncol Biol Phys 1999; 45 (suppl): 377

49) Nick B, Keith T. Treatment of anaemia in cancer patients: Implications for supportive care in the NHS cancer plan. Current medical research and opinion 2003. Vol 19, Issue 7:643

50) Curt GA, Breitbart W, Cella DF et al. Impact of cancer-related fatigue on the lives of patients. Proc Am Soc Clin Oncol 1999; 18:573A

51) Demetri GD, Kris M,Wade J et al.Quality-of-life benefit in chemotherapy patients treated with epoetin alfa is independent of disease response or tumour type: results from a prospective community oncology study. J Clin Oncol 1998; 16:3412-3425

52) Glaspy J, Bukowski R, Steinberg Det al. Impact of therapy with epoetin alfa on clinical outcomes in patients with nonmyeloid malignancies during cancer chemotherapy in community oncology practice. J Clin Oncol 1997; 15:1218-1234

53) Van Belle SJ, Cocquyt V. Impact of haemoglobin levels on the outcome of cancers treated with chemotherapy. Crit Rev Oncol Haematol 2003 Jul;47(1): 1-11

54) Dubray B, Mosseri V, Brunin F et al. Anaemia is associated with lower loco-regional control and survival after radiation therapy for head and neck cancer: a prospective study. Radiology 1996; 201: 553-558

55) Heinz Ludwig, Simon Van Belle, Peter Barrett-Lee et al. The European Cancer Anaemia Survey. Eur J Cancer , Vol 40, Issue 15, 2293-2306, October 2004

56) Peter Barrett-Lee, Carsten Bokemeyer et al. Management of cancer related anaemia in patients with breast or gynaecologic cancer: New insights based on results from ECAS. The Oncologist, Vol 10, No 9, 743-757, October 2005...

57)http://proquest.umi.com/pqdweb?index=49&did=781483221&SrchMode=1&sid=1&Fmt=…

58) Marek Z, Wojtukiewicz et al. The Polish Cancer Anaemia Survey. International journal of haematology 2009; 89:276-284

59) Tara Seshadri, H Miles Prince et al. The Australian Cancer Anaemia Survey. Medical journal of Australia.2005. Vol 182, Issue 9:453-8

60) Tejaswini P, Shanthala Devi A M, Ramesh kumar K. Profile of bone marrow iron stores in anaemia. The Indian Practitioner 2006; 59(6): 361-364

61) John P Greer, John Foerster et al. Wintrobe's clinical haematology, 11th edition, 2004, Lippincott, Williams and Wilkins

62) Gunnar Birgegard, Matti S Aapro et al., Cancer-related anaemia: Pathogenesis, Prevalence and Treatment. Oncology 2005; 68(suppl 1): 3-11

63) Marimuthu P. Projection of cancer incidence in five cities and cancer mortality in India . Indian Journal of Cancer. Jan-March 2008. Vol 45, Issue 1:4-7.

64) Martin D Abeloff, James O Armitage. Clinical Oncology, Third edition 2004 Churchill Livingstone.

MASTER CHART

S No	IP No	Age	Sex	Hb	TC	Platelets	RBC count	HCT	MCV	MCH	MCHC	RDW	Serum Iron	TIBC	Ferritin	Transferrin Saturation	Peripheral Smear	History in Clinical Exam	Renal Function Tests	Liver Function Tests
1	35809	64	F	7.2	6000	169000	2.54	24.5	96.5	28.3	29.4	58	23	230	44.08	10	NN	Ca Lip	Normal	Normal
2	34298	65	M	8.2	5400	232000	3.28	26.3	80.2	25	31.2	73.7	40	245	32.7	16.33	NN	Met Adeno Ca	Normal	Normal
3	35671	65	F	9.4	29400	309000	3.09	30.6	99	30.4	30.7	71.8	28.12	150	513.7	18.75	NN	Ca Breast	Normal	Normal
4	34317	38	M	11.3	3500	152000	5.21	36.7	70.4	21.7	30.8	47.4	26.94	210	143.3	12.83	MH	Ca Oesophagus	Normal	Normal
5	34750	65	M	6.5	6400	465000	3.4	24.3	71.5	19.1	26.7	59.5	56	430	11.2		MH	Ca Oesophagus	Normal	Normal
6	29195	53	M	11	12800	517000	4.42	34.9	79	24.9	31.5	46	62	380	17.7		NN	Adeno Ca Bronchus	Normal	Normal
7	18211	69	F	8	5600	296000	3.81	26.9	70.6	21	29.7	51.4	67	320	5.7		MH	Ca Oesophagus	Normal	Normal
8	18008	45	F	8.5	4800	335000	4.71	32.7	74.7	21.5	30	55.1	68	330	26.7		MH	Ca Oesophagus	Normal	Normal
9	17030	50	F	11.3	9400	551000	3.85	35.6	92.5	29.4	31.7	53	180	220	146.8		NN	Ca Breast	Normal	Normal
10	17256	56	F	8.2	9400	472000	3.25	26.1	80.3	25.2	31.4	49.9	123	380	149.5		NN	Met sq cell Ca	Normal	Normal
11	12093	47	M	10.3	14000	552000	4.41	32.9	74.6	23.4	31.3	40.2	59	300	163.2		NN	Ca Lung	Normal	Normal
12	7696	65	F	6.3	8100	536000	3.36	23.3	69.3	18.8	27	41.5	69	320	2.7		MH	Ca Stomach	Normal	Normal
13	205333	45	F	11.2	9100	249000	4.64	36.7	79.1	24.1	30.5	57.9	62.46	281	42.71	22.2	NH	Ca Cervix	Normal	Normal
14	41192	44	F	11.3	9600	610000	3.72	34.4	92.5	30.4	32.8	47.5	50.41	313.8	17.37	16.06	NN	Ca Cheek	Normal	Normal
15	40746	45	F	10.8	8600	313000	4.12	35.5	86.2	26.2	30.4	44.8	37	231	200.2	16.02	NN	Ca Breast	Normal	Normal
16	40745	53	F	11.1	5400	332000	3.79	34.5	91	29.3	32.2	43.3	125.38	378.9	33.49	33.09	NN	Ca Breast	Normal	Normal
17	43130	50	F	11.1	10500	351000	4.65	37.4	80.4	23.9	29.7	41.8	55.7	338.7	65.58	16.45	NH	Ca Breast	Normal	Normal
18	42982	28	F	10.7	5500	364000	4.31	36	83.5	24.8	29.7	43.9	58.3	342	110.5	17.05	NH	Ca Ovary	Normal	Normal
19	37921	60	F	10.2	5700	401000	4.07	33.9	83.3	25.1	30.1	52.5	22	182	146	12.09	NN	Ca Ovary Ascites	Normal	Normal
20	7675	65	F	10.4	4700	262000	4.08	33.9	83.1	25.5	30.7	42.1	57	286	23.7		NN	Ca Oesophagus	Normal	Normal

S No	IP No	Age	Sex	Hb	TC	Platelets	RBC count	HCT	MCV	MCH	MCHC	RDW	Serum Iron	TIBC	Ferritin	Transferrin Saturation	Peripheral Smear	History in Clinical Exam	Renal Function Tests	Liver Function Tests
21	9605	50	F	10.7	9200	366000	3.83	34.8	90.9	27.9	30.7	42.9	51	284	42.6		NN	Ca Breast	Normal	Normal
22	8201	50	F	11	7600	283000	3.84	35.4	92.2	28.6	31.1	44.8	57	265	47.6		NN	Ca Rectum	Normal	Normal
23	9892	66	F	11.2	4100	228000	3.85	34.3	89.1	29.1	32.7	43	61.8	290	106.7		NN	Ca Breast	Normal	Normal
24	8203	47	F	11.4	6500	518000	3.74	34.6	92.5	30.5	32.9	43.8	71	206.4	112.8		NN	Ca Rectum	Normal	Normal
25	11721	65	F	11.6	12300	368000	4.17	35.4	84.9	27.8	32.8	41.7	63.75	311.5	110		NN	Ca Breast	Normal	Normal
26	9434	50	M	9.1	12700	412000	3.15	29.6	94	28.9	30.7	44.1	26	280	24.7		NN	Ca Stomach	Normal	Normal
27	9690	55	M	10.9	7100	210000	3.42	33.1	96.8	31.9	32.9	47.7	58.75	290	137.6		NN	Ca Penis	Normal	Normal
28	18706	40	F	10.2	11600	329000	3.74	35.6	95.2	21.3	28.7	49.3	37	312	28		NN	Ca Cervix	Normal	Normal
29	13740	45	F	11.8	14000	442000	4.99	37.9	76	23.6	31.1	43	59	210	52.6		MH	Ca Breast	Normal	Normal
30	15354	65	F	11.9	7800	363000	4.05	36.3	89.6	29.4	32.8	40.9	66	240	212.7		NN	Ca Breast	Normal	Normal
31	105679	47	F	11.6	5000	229000	3.71	34.6	93.3	31.3	33.5	42.3	68	306	117.8		NN	Ca Breast	Normal	Normal
32	15601	65	M	8.7	5400	221000	3.82	29.7	77.7	22.8	29.3	61.9	43	319	9.2		MH	Ca Stomach	Normal	Normal
33	21406	55	F	9.8	8500	560000	3.75	32.5	86.7	26.1	30.2	45.5	47	215	47.8		NN	Ca Cervix	Normal	Normal