Spring 5-31-1965

The rimo filter

Richard Thomas Modafferi
Newark College of Engineering

Recommended Citation

Modafferi, Richard Thomas, "The rimo filter" (1965). *Theses*. 1547.
https://digitalcommons.njit.edu/theses/1547

THE RIMO FILTER

BY

RICHARD THOMAS MODAFFERI

A THESIS
PRESENTED IN PARTIAL FULFILLMENT OF
THE REQUIREMENTS FOR THE DEGREE
OF
MASTER OF SCIENCE IN ELECTRICAL ENGINEERING
AT
NEWARK COLLEGE OF ENGINEERING

Newark, New Jersey
1965

APPROVAL OF THESIS

FOR

DEPARTMENT OF ELECTRICAL ENGINEERING
NEWARK COLLEGE OF ENGINEERING

BY

FACULTY COMMITTEE

APPROVED: ______________________________

____

____

NEWARK, NEW JERSEY
JUNE, 1965

ABSTRACT

Up to the present time, there has existed no general method for obtaining the pole locations of minimum-phase constant time delay filters of desired selectivity. Since constant time delay filters are necessary for low distortion FM transmission, and minimum-phase filters are easy to construct and align, a general method for locating the poles of minimum-phase constant time delay filters would be of considerable importance. Presented in this paper is a procedure for locating the poles of minimum-phase constant time delay filters of desired selectivity, using a FORTRAN digital computer program. Two experimental FM receivers were built to test the new filter characteristic, and the performance of these receivers is discussed.

TABLE OF CONTENTS

TABLE OF CONTENTS, APPENDIX

PART 1, EXPERIMENTAL FM RECEIVERS

PART 2, RIMO FILTER COMPUTER PROGRAM

PART 3, THREE RIMO FILTERS

ACKNOWLEDGEMENTS

LIST OF FIGURES

LIST OF TABLES

INTRODUCTION

With the advent of stereo FM broadcasting, very stringent requirements have been set for the design of a suitable receiver. In particular, one important aspect of FM receiver design - the IF amplifier - has been largely neglected in tuners and receivers intended for the consumer market. For the most part, these circuits fall into a general stereotype consisting of amplifier stages which are permitted to act as limiters on strong signals combined with tuned circuits of insufficient selectivity - a sacrifice necessary to obtain nearly constant time delay to the signal. Since many shortcomings in performance which arise in commercial tuner and receiver designs can be traced at least in part to the IF amplifier, it might be that the application of some new ideas would cause some improvement in FM IF amplifier performance. One factor that is of considerable importance in any new design is the cost. New designs must be commercially feasable: economical in materials, easy to construct and align, and reliable.

In seeking a means to improve on the solution of the FM IF amplifier problem, the writer has devised a new class of linear-phase filters which will be the main subject of this paper. The study will continue with a discussion of a unique FM IF amplifier system designed to make most effective use of the new filter characteristic. Consideration of the use of the new IF amplifier in an experimental FM stereo receiver will be reserved for the final sections.

IF AMPLIFIER BANDPASS CHARACTERISTICS

Originally, some quite ordinary design approaches to the FM IF amplifier problem were investigated. Initially a minimum phase filter amplifier of nominally constant time delay based upon cascaded synchronously tuned stages was constructed. Next an amplifier using a system of stagger-damped stages giving a Bessel characteristic was tried. Both were rejected because of insufficient selectivity.

Another design effected a compromise by using a selective minimum-phase characteristic, such as Butterworth, which had fair phase characteristics with good enough selectivity to provide good alternate channel reception in most cases.[1]

The Butterworth tuner gave rather good performance[2] and probably justifies the lack of initiative that has been evident in commercial tuner designs - most of which use some type of flat-amplitude minimum-phase filter amplifier. But the Butterworth tuner still suffered from both inadequate selectivity and serious overloading of the IF amplifier on strong signals.

One of the well known characteristics of a selective, flat-amplitude minimum-phase filter is that the time delay increases from the mid-band toward the band edges. It occurred to this writer that if a single tuned circuit is placed in cascade with the aforementioned

---

1. The writer used this approach in an earlier paper, Ref. 1.
2. Performance data and specifications of this early tuner, extracted from Ref. 1, appear in the appendix.

filter and tuned to its midband frequency, some delay equalization will be obtained as qualitatively shown in Fig. 1.

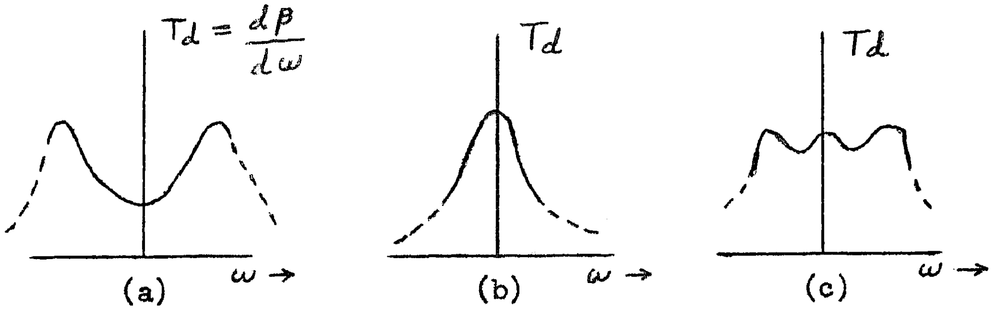

Fig. 1. Delay equalization of a bandpass filter. (a) Time delay for a hypothetical bandpass filter, (b) Time delay for a single tuned circuit, and (c) Time delay for the bandpass filter and single tuned circuit in cascade.

The concept outlined in Fig. 1 can be expanded. The question was asked: If the poles of a minimum-phase filter can be adjusted to give any desired amplitude shape, might not they also be adjustable to give any desired phase response? In particular, if the pole locations of linear-phase all-pole filters of any desired selectivity could be determined, a whole new approach to the FM IF amplifier design problem would be generated.

There has existed no general method for easily obtaining the pole locations for minimum-phase constant time delay filters of any desired selectivity. Of the known filters in the minimum-phase class with nominally constant time delay - Bessel, Gaussian, and Butterworth-Thompson - the problem is either one of insufficient selectivity or of less than optimum time delay characteristics. Highly selective filters of constant time delay may be realized by adding an all-pass delay equalizer to a Butterworth or Legendre filter, but the physical construction and alignment of these all-pass delay equalizers at 10.7 MC (the FM IF amplifier frequency) is so nearly impossible as to rule out any consideration for their use in a commercially feasable FM receiver.

THE RIMO FILTER

Presented in this paper are several of a new class of minimum-phase filters, having nominally constant time delay and moderately flat amplitude response inside their passbands, and high selectivity outside their passbands. The pole locations for these filters were obtained by computer solution, and some of the resulting pole constellations are found to allow the design of a selective, low distortion FM IF amplifier.

The basic concept of the Rimo[3] filter is simple but requires a high speed digital computer to obtain the pole locations. Applying the Rimo filter concept begins with the placing of some number of poles in the S-plane and adjusting from just one to all of these poles until minimum delay error occurs in the passband. An almost infinite variety is then possible, with Fig. 2 on page 5 showing three possibilities. In filters (1) and (2), poles (X) form a standard minimum-phase filter, and poles (+) may be considered as a separate delay equalizer: These are "hybrid" Rimo filters. In (3), all the poles were adjusted to give minimum delay error; this is a "pure" Rimo filter.[4]

[3] A name generated by taking the first two letters from RIchard MOdafferi.

[4] Pole locations for "pure" Rimo filters approximate those for Bessel filters, with the two tending to become more nearly identical as the number of poles increases.

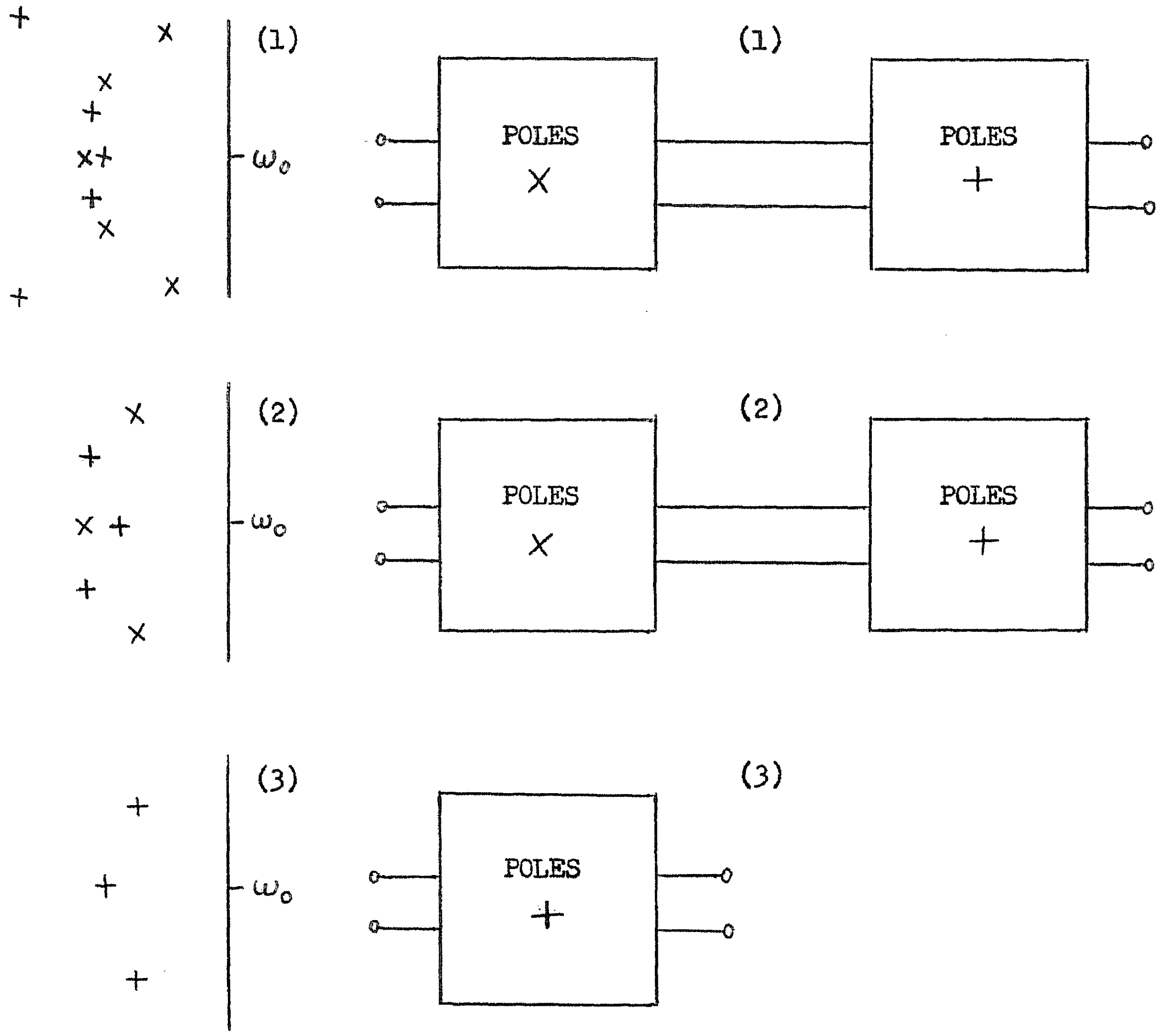

Fig. 2. Three Rimo filters. In equalizing the time delay in the passband, poles (+) were moved and poles (×) were held fixed. Although the poles × and + of filters (1) and (2) are shown split into two definite sections (which may be considered as a filter plus a delay equalizer), this is not mandatory. The Rimo filter may be realized in any manner particular to minimum-phase filters.

A general computer program has been written in IBM Fortran to allow any number of poles from four to twenty to be placed in the S-plane. Up to ten of these poles may be fixed, and up to ten of them may be movable to give minimum delay error. For example, the designer may select a five-pole Butterworth filter, add five more poles, and locate the ten poles of a hybrid Rimo filter by using the computer to adjust the five added poles to equalize the delay of the Butterworth filter. When the pole locations have been determined, the filter may be realized by any synthesis methods the designer chooses.

BASIC THEORY OF THE RIMO FILTER COMPUTER SOLUTION

In order to obtain a linear-phase characteristic from an arbitrary number of poles placed in the S-plane, a computer program is required whose operation is entirely automatic and convergent; i.e., the computer must accept the given poles and move them quickly without equivocation into what should be one and only one optimum constellation. Some thoughts on this idea will now be presented.

Given any number of poles in the S-plane, one may obtain minimum delay error by moving all of the poles out to infinity. The resulting filter then could be realized as a ladder structure consisting of series open circuits and shunt short circuits - a realization of no practical value. Thus the first consideration in writing the computer program is that of keeping the given poles clustered symmetrically about the mid-band frequency so that some kind of selective filter will result. This is most easily accomplished by specifying the mid-band time delay and holding this value constant during execution of the program, automatically forcing all of the poles to remain near the mid-band frequency.

If one plots the phase response of a hypothetical narrow band minimum-phase bandpass filter, and superimposes on this curve a straight line drawn tangent to the phase curve at the mid-band frequency, the result in Fig. 3 may be obtained.

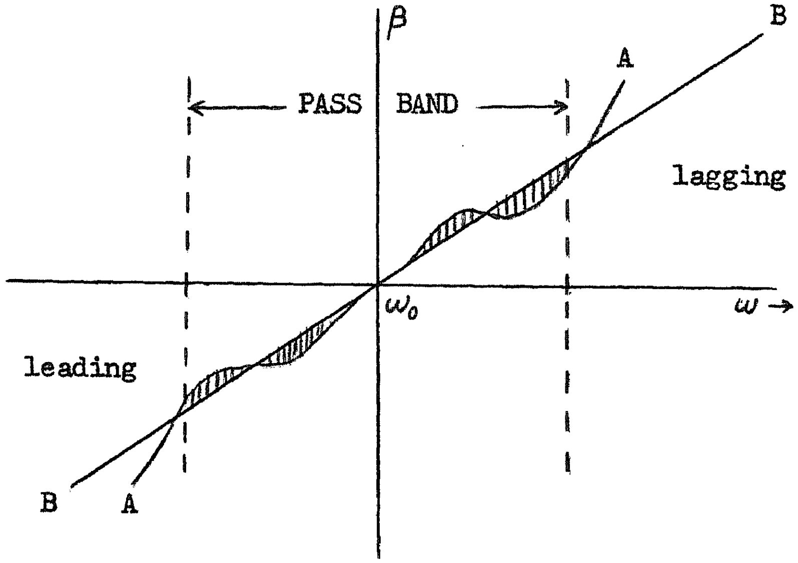

Fig. 3. Phase response of a bandpass filter having poor phase linearity. Curve (A) is phase characteristic of filter, line(B) is drawn tangent to phase curve at the mid-band frequency. The shaded area between (A) and (B) is a measure of the phase error.

If a computer program can be set up such that the shaded area in Fig. 3 is automatically reduced as poles are moved, the problem will be solved, since a filter having a straight line phase shift will have constant delay.

OUTLINE OF THE COMPUTER SOLUTION

The method of the computer program will be shown by consideration of a simple example. Given the three poles of Fig. 4, let them be adjusted to give minimum delay error in the passband.[5] The computer will first calculate the mid-band time delay for the three poles. This value of time delay is then stored and any subsequent pole movements are controlled in such a manner as to hold this initial time delay essentially constant. Next, the phase shift for the three poles is calculated at frequencies along the $j\omega$ axis beginning at the mid-band frequency and ending at an arbitrary point selected by the programmer - this ending point usually being just beyond the imaginary coordinate of the last poles (P1 and P3 of Fig. 4).

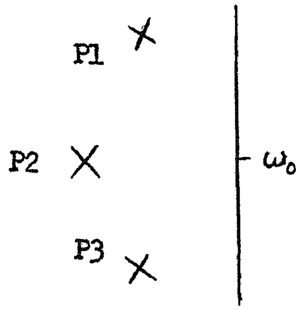

Fig. 4. Three poles to be adjusted by the computer to give minimum delay error.

The values of phase shift are then compared with those values obtained from a straight line drawn through the phase characteristic for the initial pole positions, as in Fig. 4. With the lines A and B of Fig. 3 determined in the computer, it next calculates the magnitude of the shaded area between them and stores this number.

Now a pole is moved. First, the middle pole is moved a small distance along the real axis with other poles remaining fixed at their initial locations. Then the shaded area is recalculated. If it

[5] The result will approximate an $n = 3$ Bessel filter.

is less, indicating lower phase error, the pole is moved again in the same direction until the value of the area passes through a minimum. Upon passing through the minimum, the pole is moved back to the location giving minimum delay error and left at this point. If upon the initial movement of pole P2 in the real direction the area had become larger rather than smaller, the pole movement would have been reversed and a minimum sought.

Next, poles P1 and P3 are moved in the real direction as a conjugate pair until the area function is again minimized. Following this, poles P1 and P3 are moved in the imaginary direction to seek an area minimum. Now all three poles have been moved in all possible directions to minimize the delay error. However, due to interactions between the poles upon the delay error, the entire process is generally repeated for a number of complete cycles.

Usually, four or more complete cycles of pole movement will complete the minimization of the delay error. How quickly the solution is arrived at depends on many factors, including how close to the optimum the starting pole constellation was, and for what percent of the passband a linear phase response is desired.

There exist refinements in the program which allow the operator to exercise some control over the results. The initial value of pole movement increment is adjustable. Assuming that a rough solution is required, the poles may be adjusted in large steps to arrive quickly at a result good enough for an evaluation.

The programmer may decide to equalize the delay over the whole passband, or choose equalization near the mid-band frequency only - the latter giving somewhat better amplitude characteristics. Using the program, any known all pole filter may have poles added to it and then have these added poles adjusted to give minimum delay error to the combination. The program is limited, however, to the poles of minimum-phase filters, although modifications to include poles and zeros of nonminimum-phase filters are not impossible.

DESIGN OF RIMO FILTERS USING THE COMPUTER PROGRAM

Introduction

Realization of a Rimo filter begins with choosing the desired selectivity. A given selectivity can be satisfied by several pole constellations, but by referring to the normalized data in the appendix, the approximate number of poles required for linear-phase filters of desired selectivity may be determined by examining the amplitude responses for the tabulated Rimo filters. If the design criteria can be met by one of the pole plots in the appendix, the location of the poles is thus finished and the realization of the filter can proceed to any synthesis method the designer chooses.

If the requirements cannot be met by one of the pole plots in the appendix, or if the designer wishes to equalize the delay of some filter he already has, the computer program will have to be used.

Explanation of the Computer Program

During the forthcoming discussion of the actual programming of the computer to design a Rimo filter, the program and its flow chart will be covered in detail.[6] A through understanding of the operation of the program is essential in order for one to achieve maximum results.

[6] The program and flow chart appear in Appendix, pages 7 to 18.

Table no. 1 below lists the variables which are used by the computer in working the program. Some of these variables are used by the programmer in initializing the problem; others are used only by the computer in working out the program. This table should be referred to as the discussion of the program and its flow chart progresses.

TABLE 1.

(a) Variables Used by the Programmer

NF	number of fixed poles
NV	number of movable poles
I	equal to zero for odd number of fixed poles equal to one for even number of fixed poles
NI	equal to zero for odd number of movable poles equal to one for even number of movable poles
MOOD DELL COW MOO	used collectively to control pole movements
XX(NN) YY(NN)	dimensioned array for the movable poles
X(N) Y(N)	dimensioned array for the fixed poles
FB	area weighting function
CONST	area weighting function
REFER	initial value for weighted area

(b) Variables Used by the Computer Only

INDEX	cumulative number of pole movements made
POSER	maximum positive phase error, radians
ERNEG	maximum negative phase error, radians
KOSFQ	frequency of maximum positive phase error
NEGFQ	frequency of maximum negative phase error

TABLE 1, CONTINUED

ERFNC	weighted area between linear-phase line and filter phase curve.
FEE	phase angle to the fixed poles.
FEEE	phase angle to the movable poles.
MOD	control variable used in locating point of minimum phase error during movement of a pole.
M	variable controlling computed GO TO.
N	index on dimensioned variable for fixed poles.
NN	index on dimensioned variable for movable poles.
NE	dummy variable used to set value for NSFP.
NNE	dummy variable used to set value for NSVP.
NSFP	equal to one for odd number of fixed poles, equal to two for even number of fixed poles.
NSVP	equal to one for odd number of movable poles, equal to two for even number of movable poles.
DEL	actual distance a pole is moved in S-plane.
INDIX	number punched in output data. Gives total number of pole movements accumulated by computer when a pole is located at point of minimum delay error.
ERRA,... ...ERRU	departure from linear phase, in radians, at normalized frequencies of 5, 10, 15....100 radians/second.
MM	dummy variable used to control exit of computed GO TO loop.
K	fixed point frequency variable.
F	floating point frequency variable. Always equal numerically to K.
ANG(K)	phase angles to all poles at frequencies K for all K from 1 to 100.
FE(K)	phase angles to fixed poles only at frequencies K for all K from 1 to 100.
ANGL	phase angle to all poles at frequency K equal to one only. Also equal to the numerical value of the normalized time delay in seconds for the mid-band frequency.
ERR(K)	phase error as departure from linear-phase for all K from 1 to 100.
DELTA	dummy used to accumulate summing of the weighted errors. (see ERFNC below)
ERFNC	weighted area function resulting from the continued summing of DELTA.
JERR(K)	ERR(K) multiplied by a thousand. Used to control IF statement which in turn controls output data punched for NEGFQ, ERNEG, KOSFQ, and POSER.

TABLE 1, CONTINUED

KLUNK	controls direction of initial movement of a pole; reverses movement direction if initial movement causes an increase in phase error.
COW MOO	used together to fix the number of pole movements taken during full execution of the program.

The logic of the computer program will be most easily understood if the above table is used in conjunction with the flow chart in following the program.

Consideration of a specific example will show how the program operates: five movable poles will be adjusted to equalize the delay of a five-pole minimum-phase filter. Given in Fig. 5 below are the poles of a five-pole Butterworth function, taken from Ref. 2, page 331.

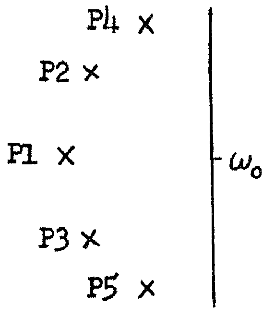

P4	0.309	+ j0.951
P2	0.809	+ j0.588
P1	1.000	+ j0.000
P3	0.809	-j0.588
P5	0.309	-j0.951

Fig. 5. Pole locations for a five-pole Butterworth function. (L.H.P. poles only)

Before insertion into the computer, the poles must be normalized such that the imaginary parts of the outermost poles (those farthest from the mid-band frequency) have an absolute value at or slightly below 100.000.[7] This is most conveniently done by multiplying the real and imaginary parts of all poles in Fig. 5 by 100.000 with the resulting values appearing in Table 2 below.

TABLE 2

Fixed poles scaled for insertion into the computer

X(1)	100.000	Y(1)	0.000
X(2)	80.902	Y(2)	58.779
X(3)	80.902	Y(3)	-58.779
X(4)	30.902	Y(4)	95.106
X(5)	30.902	Y(5)	-95.106

A guess based on a graphical study of this pole configuration led to placing the five movable poles as follows:

TABLE 3

Movable poles scaled for insertion into the computer

XX(1)	100.000	YY(1)	0.000
XX(2)	99.000	YY(2)	30.500
XX(3)	99.000	YY(3)	-30.500
XX(4)	154.000	YY(4)	107.000
XX(5)	154.000	YY(5)	-107.000

Initial values for NF, NV, I, MOOD, DELL, COW, and MOO were set up as in Table 4.

TABLE 4

Initial values for the program control variables

NF	5	MOOD	0
NV	5	DELL	2.7
I	0	COW	0.0
NI	0	MOO	0

---

[7] Real parts for the poles in the L.H.P. are given plus signs in order to simplify the input data. The program is set up in such a manner that this causes no problem.

An arbitrarily large number is chosen to initialize the value for REFER:

REFER..........1715.966

When the above input data has been punched on cards according to the relevant FORMAT statements, the program is compiled. The data cards from tables 2, 3, and 4 are read in along with REFER and the computer is started.

Normally, all sense switches are left OFF and the computer proceeds from statement 410 to statement 21, initializing the various control variables as follows.

```
     MOD = MOOD  =  0
     M = NI + 1 = 0+1 = 1
     N = I = 0
     NN = NI = 0
  30 NNE = NN = 0
  32 NE =  N = 0
  35 NSFP = NE = 0
     NSVP = NNE = 0
     DEL = DELL = 2.7
 250 K = 1
  21 F = K = 1
```

Statement no. 21 actually begins the problem solving phase of the program. This will become more evident with the consideration of a few more steps:

```
  22 N = N + 1  =  0 + 1 = 1
     NSFP = NSFP + 1 = 0 + 1=1
  25 FEE = FEE + ATANF((Y(N) -F)/X(N))
```

or

```
  25 FEE  =  0  +  ATANF(0.000 - 1.)/(100.000)
```

which is

-0.0099996666 radian.

The situation existing in the computer as statement 25 is executed is shown in Fig. 6 below. Only the relevant pole X(1), Y(1) is shown.

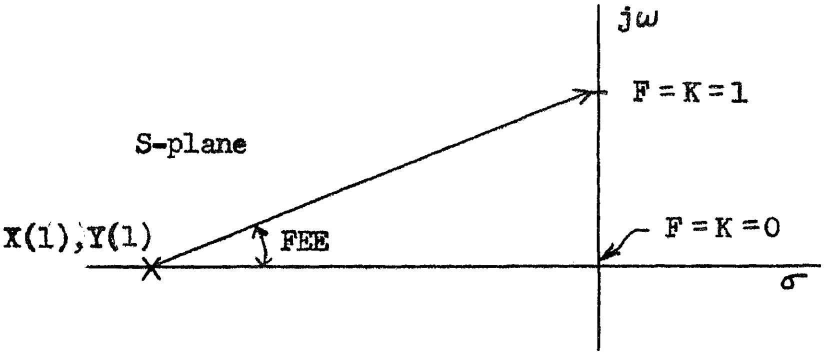

Fig. 6. Graphical representation of statement n. 25 with the computer executing this statement at the first pole for frequency equal to one.

Note that the angle FEE is made to come out as a negative quantity by subtracting the frequency 1 from the Y value of the pole. This is consistent with reality, as the phase contributed by a pole in the L.H.P. is negative for frequencies above the imaginary part of the pole.

After computing FEE, the machine proceeds to the next pole X(2), Y(2) by the following steps:

```
22 N = N + 1 = 1 + 1 = 2
   NSFP =  NSFP+1  =  2
25 FEE  =  FEE + ATANF((Y(N) - F)/X(N))
```

or

```
   FEE  = -.099996 +  ATANF(58.779 - 1)/(80.902)
```

which is

+0.61018317 radian.

This process continues until FEE is summed for all of the fixed poles at the frequency F = K = 1. Then the phase angle contributed by all of the poles at frequency 1 is stored as:

```
24 FE(K)  =  FEE
```

or

FE(1) = -0.032360900 radian.

next the phase angle to the movable poles is calculated, using a method similar to that for the fixed poles. This process is contained in statements 23 to 13 inclusive and will not be explained in detail.

Statement 14 is executed only if there are no fixed poles. Thus the procedure passes on to statement 15 where the total phase angle to all of the poles - fixed and movable - is stored in ANG(1) as:

```
      15 ANG(K)  =  FE(K) + FEEE
or
         ANG(1)  =  FE(1) + FEEE
and
         ANG(1)  =                -0.069569700      radian.
```

The variables controlling the calculation of phase angle are now reinitialized so that the computation of these angles can be carried out for frequency F = K = 2.

```
 16 FEE   =  0.
    FEEE  =  0.
    N = I =  0
    NN = NI =  0
    NSFP  = NE  = 0
    NSVP  = NNE = 0
998 ANGL  =  ANG(1) = -0.069569700 radian.
```

Statements 999 to 104 - 2, inclusive, control the storage of output data consisting of the normalized frequencies of maximum positive and negative phase error and the values, in radians, for these phase errors.

Statement 63 increments frequency to the next value as:

```
63 K = K + 1
```

or

```
K = 1 + 1 =  2
GO TO  21
```

The computer returns to statement 21 and follows the procedure outlined above for frequency F = K = 2 instead of F = K = 1. This process continues for frequencies 3, 4, 5,....100. When the machine reaches frequency 100, it will have computed the entire phase curve[8] for all of the given poles at 100 points along the frequency axis. Output data is then punched in accordance with statements 64 to 997, inclusive, as tabulated below:

TABLE 5

The First Set of Output Data Punched by the Computer

```
INDEX.....1                        YY(1)....   0.000
POSER.....0.02123 radian           YY(2)....  30.500
KOSFQ.....56                       YY(3).... -30.500
ERNEG.....0.1750  radian           YY(4).... 107.000
NEGFQ.....100                      YY(5)....-107.000
XX(1).....100.000
XX(2)..... 99.000
XX(3)..... 99.000
XX(4).....154.000
XX(5).....154.000
```

The actual output data as punched by the computer for four complete pole movement cycles using the data from tables 2, 3, and 4 with REFER of page 14 appears in the appendix on pages 19 through 34. Note how the first four lines of the output data correspond to table 5 above. Now examine the next four lines of the output data, observing that pole XX(1) has been moved 2.7 normalized units to the left along the real axis. How this was accomplished will now be explained.

[8] That portion of curve (A) of Fig. 4 to the right of the mid-band frequency. By symmetry, the left hand portion is the same.

After punching the output data appearing above, the computer arrives at statement 997 + 1. In this statement, ERFNC, the weighted phase error area function, is compared with REFER, which is the arbitrarily large phase error area function read in the input data. Since ERFNC is less than REFER, the computer proceeds to statement 333.

```
333 KLUNK = KLUNK + 1 = 0 + 1 = 1
    GO TO 252
```

Statement 252 replaces the old REFER, 1715.966, with the just calculated value for ERFNC, 83.811. When a pole has been moved and a new ERFNC calculated, it will be compared with this new value for REFER, 83.811, in order to ascertain whether the pole movement has made the phase error better or worse.

The series of arithmetic statements beginning with ERRA = ERR(5) and ending with ERRU = ERR(100) stores twenty values of phase error, in radians, for later output data. Statements 275 through 255 - 1 reset ERFNC, POSER, ERNEG, KOSFQ, and NEGFQ so that these may be recalculated for the next pole configuration.

Pole XX(1), YY(1) is now moved 2.7 units to the left by statement 255 as follows:

```
255 GO TO(253,260,280,270,290,261,262,266,265), M
```

Since M = 1, the computer goes to statement 253 and executes it as below:

```
253  XX(1)  =  XX(1)  +  DEL
```

or

```
XX(1) = 100.000 + 2.700 = 102.700
GO TO 10
```

Pole XX(1) is now located at 102.700 and the computer has returned to statement 10 to begin a new cycle of calculations. This new cycle determines the output data appearing on lines five through eight in the output data printout on pageA19 of the appendix.

By examining the output data, the progress of pole XX(1), YY(1) may be determined. Note that the pole continues to move in steps of 2.7 units until a point is reached where the relative magnitudes of ERFNC and REFER change. The pole continues to move to the left as long as ERFNC continues to be less than REFER. When a point is reached where ERFNC is calculated to be greater then REFER (line 8 on pageA19) the pole would either have been moved the wrong way initially or moved through a point of minimum delay error. In this case, the initial movement of the pole was in the wrong direction, since the computer was "fooled" by the initial read in value for REFER.[9]

The motion of the pole is now reversed; i.e., it is now moved to the right toward the point of minimum delay error as follows:

```
251 IF(KLUNK) 258, 258, 259
```

---

[9] Negligible machine time (in comparison to the total) is lost by this process. The writer once calculated REFER to two significant figures using a graphical process and a slide rule; this took forty hours. The machine used by the author(an IBM 1620) - quite a slow computer - will calculate refer for ten poles in about forty seconds.

Since KLUNK = 1,

259 MOD = MOD + 1

or

MOD = 0 + 1 = 1

and since MOD ≠ 3,

249 DEL = -DEL/3.

or

DEL = -2.7/3. = -0.9

With DEL now equal to -0.9, the pole is moved to the right in successive steps of 0.9 units until the point of minimum delay error is again passed. DEL is then divided by three and its sign changed, and examination of the output data (appendix page A19) will show that the pole is now moved to the left in steps of 0.3 units until the minimum delay error point is passed for the third time.

In order to return pole XX(1) to its optimum position, it is moved 0.3 units to the right and then left at this point which gives minimum delay error. (The minimum value for ERFNC is given in the output data as 71.627.)

The next pole - actually the conjugate pair XX(2), XX(3) - is moved 2.7 units to the left, beginning the system of movements that will soon locate this pair at the X coordinate giving minimum delay error. The process of pole movements continues until all of the poles have been moved, with single poles being moved in the X direction only and conjugate pairs being moved in both the X and Y directions. All of the pole movements are summarized in table 6 on the next page.

TABLE 6

Summary of Pole Movement Directions for 5 Movable Poles

pole	movements
XX(1), YY(1)	in X (real) direction
XX(2), YY(2) XX(3), YY(3) XX(4), YY(4) XX(5), YY(5)	in X and Y (imaginary) direction as a conjugate pair

A study of the output data from the beginning (appendix p.A19) to the end (appendix p.A34) will reveal the pole movements summarized above.

Note that in the output data when the movement of a pole has been completed, three extra lines appear. Examine line 57 on page A20 of the appendix. The INDEX (actually INDIX) with a value of 13 states that it took thirteen pole movement steps to place the pole XX(1) in a position to give minimum ERFNC. Count up eight lines and note that the same number (now INDEX) appears at the start of line 49. At INDEX = 13, the pole has been located at the optimum position, four lines later the computer has determined that the point of minimum delay error has been passed, and seven lines later (line 61) the pole XX(1) has been relocated at its optimum position and the next pole movement (XX(2), XX(3)) has been executed.

The three extra lines of data appearing at each optimum pole position give the phase errors, in radians, at frequencies of 5, 10, 15,...... 100 normalized frequency units for the pole position given by the number, INDIX, punched at the start of the first of the three lines.

Sometimes one or two of the phase errors punched at an optimum pole position will correspond to POSER or ERNEG. Since ERNEG, 1.871E-01 radians, occurs at frequency 100, this value is also punched as the last entry on line 49.

When the computer has completed the entire cycle of pole movements for the first time, it arrives at statement 300 in the program and executes:

```
          300   M = NI + 1
or
                M =  0 + 1 = 1
```

It then prints, on the typewriter, statement no. 77:

```
X-Y POLE SHIFT CYCLE COMPLETE
```

This tells the programmer that the machine is now going to reiterate the entire pole movement process. Execution of the program continues:

```
          COW = COW + 1. = 0. + 1. = 1.0
and
            5   MOO = MOO + 1 = 0 + 1 = 1
          301   DELL = DELL/3.0 = 2.7/3.0 = 0.9
                DEL = DELL = 0.9
                MOD = MOOD = 0
                GO TO 275
          275   ERFNC = 0.
                POSER = 0.
                ERNEG = 0.
                KOSFQ = 0
                NEGFQ = 0

          255   GO TO(253,260,280,270,290,261,262,266,265), M
```

Since M = 1, the machine proceeds to statement 253, as shown on the next page.

```
     253 XX(1) = XX(1) + DEL
or
         XX(1) = 97.600  +  0.9  =  98.500
```

The entire cycle of pole movements thus begins anew with DEL starting out as 0.9 instead of 2.7. This will give a finer resolution in locating the optimum pole positions.

On the third cycle, DEL begins with a value of 0.3, and on the fourth, or final cycle, DEL begins with a value of 0.1. On the third and fourth cycles, the number of pole movement reversals decreases, with a corresponding reduction in the number of times the variable DEL is changed. A final solution is approaching and machine time will be saved if the number of back and forth pole movements is decreased. The relative values of COW and MOOD are the controlling factors in the number of back and forth movements of the poles as the cycles progress; tables 7 and 8 show some possibilities.[10]

TABLE 7

Number of changes in the variable DEL, including that giving the final pole positioning, which occur for different values of COW with MOOD equal to zero.

COW	1st cycle	2nd cycle	3rd cycle	4th cycle
-2.0	4	4	4	4
-1.0	4	4	4	3
0.0	4	4	3	2
1.0	4	3	2	1

Line three of table 7 shows the pole movements executed by the program under discussion. As another example, consider the table on the following page, with MOOD set equal to + 1 instead of 0.

10. If the initial movement of a pole is incorrect, one more change in the variable DEL than the number indicated in the table will occur.

TABLE 8

Number of changes for variable DEL, including final positioning, which occur for different values of COW with MOOD equal to + 1.

COW	1st cycle	2nd cycle	3rd cycle	4th cycle
-2.0	3	3	3	2
-1.0	3	3	2	1
0.0	3	2	1	-
1.0	2	1	-	-

The programs of table 8 would take little machine time and would be useful in obtaining an approximate solution. Note that less than four movement cycles are possible. For line three of table 8, MOO will have to be initialized at one rather than zero to prevent a "hang up" on the nonexistent fourth cycle; similarly for line four, MOO will have to be initialized at two.

Returning to the program being discussed, table 9 below summarizes the actual pole movement steps which happen during the four complete pole movement cycles. Every single pole will have experienced each of these movements in the X direction, while every conjugate pair will have experienced each of these movements in both the X and Y directions.

TABLE 9

A Summary of the Pole Movement Increments for the Program Under Discussion

1st cycle	2.7, -0.9, 0.3, -0.3
2nd cycle	0.9, -0.3, 0.1, -0.1
3rd cycle	0.3, -0.1, 0.1
4th cycle	0.1, -0.1

Examination of the output data contained in the appendix will confirm the pole movement cycles outlined in table 9.

MOO is the variable which causes the execution of the program to cease. When MOO reaches the value four in statement 5 + 1, four complete pole movement cycles would have been completed. The following steps are then undertaken:

```
PRINT 107
```

and statement 107 is typed as:

```
FINAL X-Y POLE CYCLE COMPLETE. NEW DATA NEEDED
```

continuing,

```
PUNCH 108, ANGL
```

and ANGL is punched as

```
-69.830110E-03    (radians)
```

Evaluating the Result of the Computer Program

The programmer must then decide if the four pole movement cycles gave sufficient delay equalization. Two criteria exist which are used to ascertain the usefulness of the solution. The first involves the examination of ERFNC. If the value of ERFNC is observed to be rapidly decreasing at the end of the output data, then the optimum delay error point has not been reached and another set of pole movement cycles will be required.

To initiate a new set of pole movement cycles requires only the re-use of the final cards from the output data which give the last optimum pole locations; these are lines 820 and 821 on page A34 of the appendix.[11] The last value of REFER may be used, or the arbitrary large value used earlier may be re-used. The same card originally used to initialize NF, NV, I, NI, MOOD, DELL, COW, and MOO may also be re-used, but a new one is generally punched. In most cases, it is better to start a second complete run with a reduced initial value[12] of DELL; i.e., a value of 1.8 or 1.2 may be used instead of the original value of 2.7.[13] Below are summarized the data which might be read in for the next complete run of four cycles:

TABLE 9

Initial Data to Start a New Four Cycle Pole Movement

XX(1)......	94.700	NF.........	5
XX(2)......	99.000	NV.........	5
XX(3)......	99.000	I..........	0
XX(4)......	158.000	NI.........	0
XX(5)......	158.000	MOOD.......	0
YY(1)......	0.000	DELL.....	1.8
YY(2)......	30.300	COW......	0.0
YY(3)......	-30.300	MOO........	0
YY(4)......	105.600		
YY(5).....	-105.600		

The second criterion for evaluating the result of the computer solution involves the determining of the absolute phase errors. If ERFNC is found to be nearly static in the output data as pole movements are executed, then the poles are in their optimum positions and further computation is not necessary. By multiplying ANGL (the last line of

[11] Note that here REFER is static and a new run is not necessary.

[12] Note the violence done to REFER by using the large value for initial DELL of 2.7 here. The pole position of tables 2 and 3 was nearly optimum.

[13] Making DELL divisible by three makes the pole movement reversals easy to follow in the output data.

output data, page A34 of the appendix) by 5, 10, 15.....100 and comparing the results with the phase errors printed on line 827 to 829 of the output data (page A34 of the appendix), the magnitude of the phase or delay error for the pole constellation may be evaluated, as will now be shown:

ERR(35) is determined from the output data to be

1.057E-03 radians

and ANGL is

-69.830110E-03 radians

and

(ANGL)(35) = -2.4440 radians.

Thus the phase error is 0.001057 radians in -2.4440 radians. Expressed as a per cent, the result is

phase error = 0.0433 %, leading.

Approximate time delay error in per cent may be established as follows:

ANGL = radians of phase shift at F = K = 1

therefore

$$\text{midband time delay} = \frac{\text{phase shift}}{\text{frequency 0 to 1}} = \frac{\text{ANGL}}{1}$$

which evaluates as

0.069830110 seconds.

Delay error will be indicated by the departures which exist along the passband from the value of this midband time delay. The value of the time delay at $F = K = 35$ is determined approximately as:

$$\text{TIME DELAY} = \frac{\dfrac{\text{PHASE SHIFT IN FREQUENCY 30 TO 35}}{5} + \dfrac{\text{PHASE SHIFT IN FREQUENCY 35 TO 40}}{5}}{2},$$

or

$$\text{TIME DELAY} = \frac{\dfrac{0.346723}{5} + \dfrac{0.347055}{5}}{2},$$

which gives

0.069377 seconds @ frequency 35.

Thus the delay error with respect to the mid-band delay is given by:

$$\text{DELAY ERROR, \%} = \frac{\text{MID-BAND DELAY} - \text{DELAY AT 35}}{\text{MID-BAND DELAY}}$$

or

$$\text{DELAY ERROR, \%} = \frac{0.069830 - 0.069377}{0.069830} = 0.648\ \%.$$

A more accurate result, if needed, may be obtained by calling from the computer memory the final value of the entire array ERR(K). Resolution of ERR(K) to frequencies only one unit apart would then be possible, as opposed to the resolution of the punched data, which gives phase errors for frequencies five units apart. The equation for delay error given above can then be used to determine the delay error, as before.

Some Further Details

The possibility may arise that the delay error is excessive when the optimum pole constellation is reached, as indicated by no further reduction in ERFNC. Two possible reasons exist for the difficulty: (1) The delay error due to the fixed poles is so great that the specified number of movable poles cannot achieve delay equalization, and (2) delay equalization over too great a bandwidth is being attempted.

Resolving the difficulty involves either adding more movable poles and/or modifying the weighting of the error function. The adding of more poles is a fairly easy task, at least in principle, and needs no special explanation.

Modifying the weighting of the error function involves the adjustment of the two quantities CONST and FB. This is achieved by starting the program going with SENSE SWITCH ONE turned ON. The machine will then type:

INSERT CONST, FB

Using the typewriter, new values of CONST and FB are read into the program. Generally CONST will be left at the value 1.0, but to attach less importance to delay errors far removed from the mid-band frequency, FB is made smaller; it may be made less than 100, so that the computer will deliberately accentuate the delay error at the band edges in order to achieve less delay error near the mid-band frequency.

Generally, small values of FB and CONST will give a delay error characteristic tending toward an "equal ripple" condition, while large values for FB and CONST will produce a delay error characteristic tending toward a "maximally flat" condition.

Conclusion

The explanation of the computer program given here is by no means complete. Indeed, a full exposition would require a book and is beyond the scope of this paper. However, given a through understanding of the operation of the program for the given example above, the reader will, with further study of the program, its flow chart, and tables one through nine, come to a full understanding of its operation. To further assist the reader in comprehending the operation of the program, the complete set of input data used in computing all of the pole locations given in the appendix is given along with the relevant pole locations.

APPLICATION OF THE RIMO FILTER TO THE FM IF AMPLIFIER

The real usefulness of the Rimo filter lies in its application to FM transmission. Ideally, FM signals are sensitive to phase information only, and it is this characteristic that makes Rimo filters useful for FM transmission. These filters have nominally linear phase response and moderately rounded amplitude response within their passbands, and high attenuation outside their passbands. If an FM signal is applied to a Rimo filter, it will pass through with its important phase information negligibly distorted. The moderate amplitude distortion which results would be easily handled by a good limiter, while the high selectivity will effectively suppress alternate channel signals.

Full realization of the potential inherent in the Rimo filter concept utilized in an FM IF amplifier design requires some care in the layout of the system. Poles of a Rimo filter are chosen on the basis of required selectivity and allowable circuit complexity. Two experimental FM receivers have been built using the Rimo filter concept, the first being a "state of the art" tuner and the second being a table radio. Both use identical 5-pole Butterworth filters with five equalizer poles, with the equalizer poles being realized in a different manner in each.

A functional block diagram of the tuner is shown in Fig. 7, and that of the radio is shown in Fig. 8 on the next page.

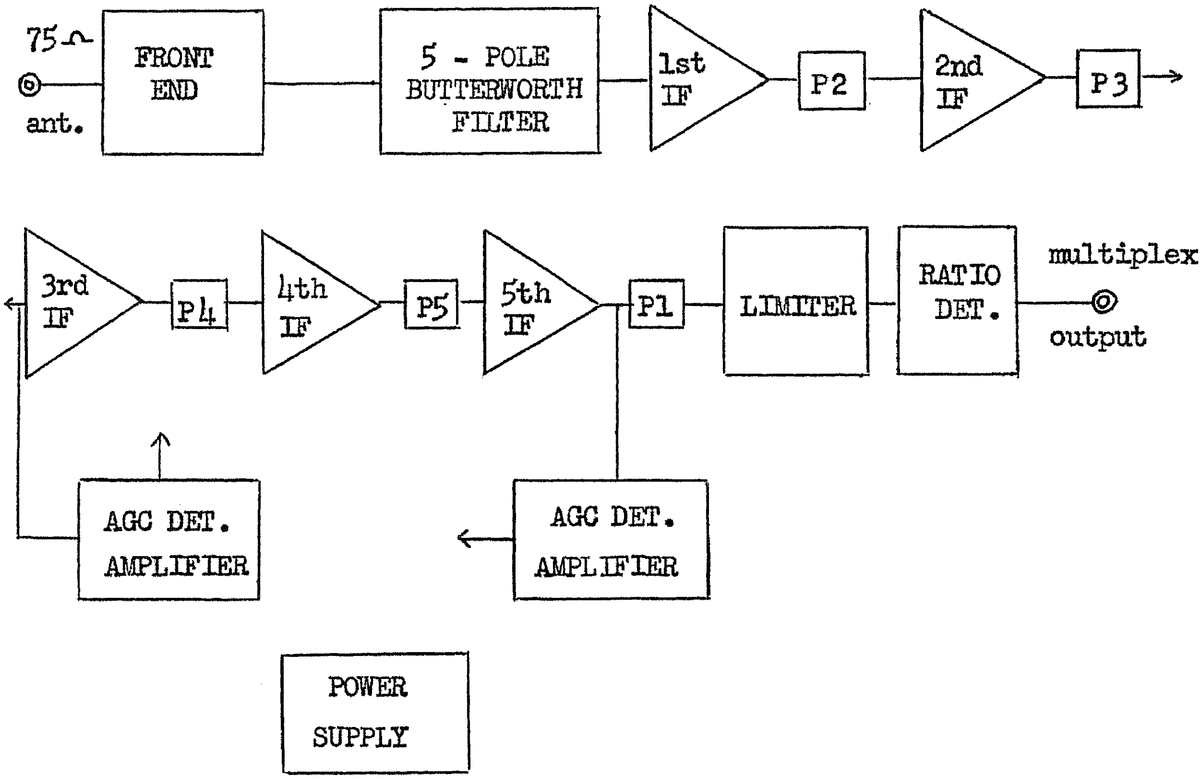

Fig. 7. Functional block diagram for the tuner. The five interstage networks are the five equalizer poles (P1 through P5).

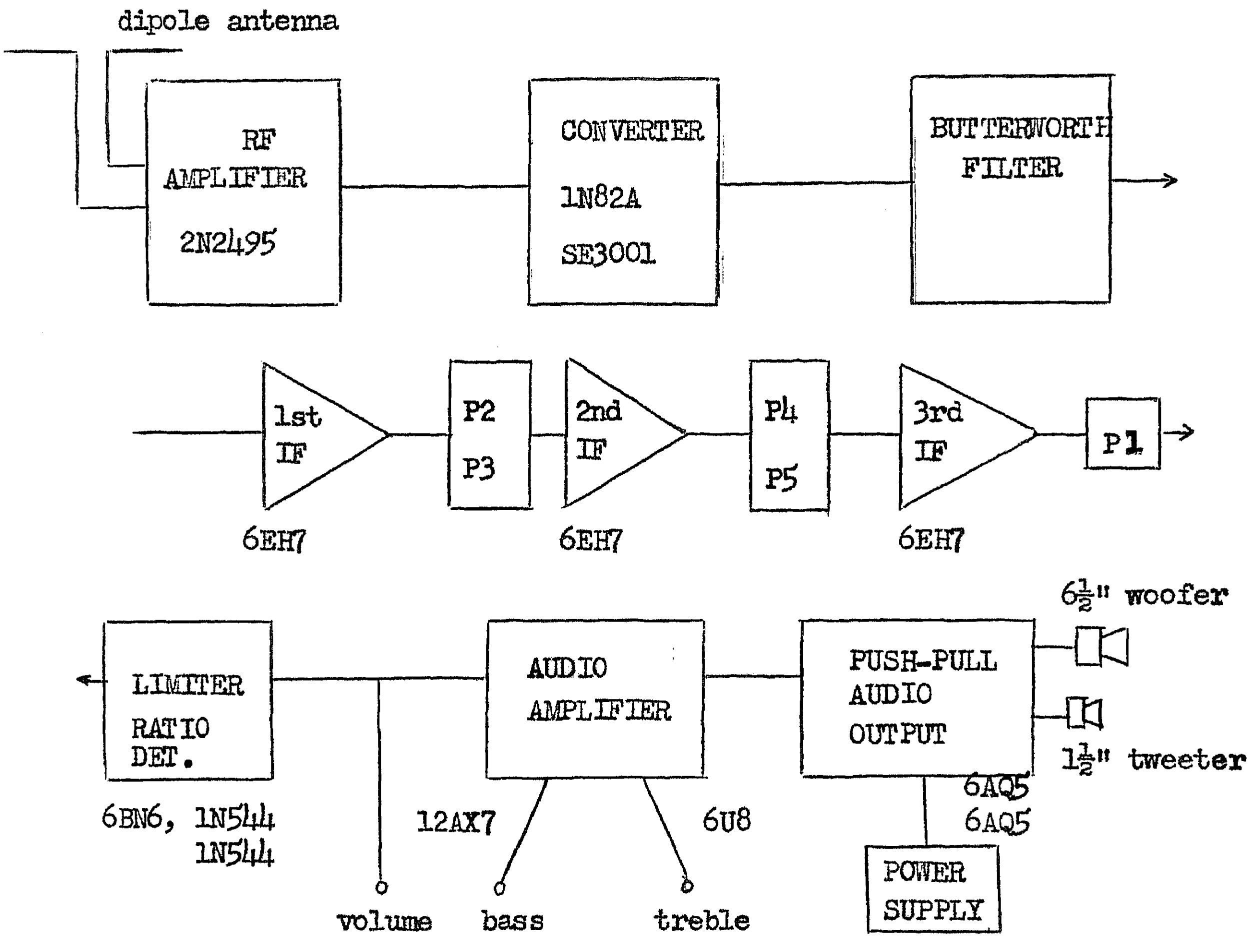

Fig. 8. Functional block diagram for the radio. The equalizer poles are realized as two double-tuned and one single tuned interstage.

Note that in realizing the Rimo filter, the poles were split. The Butterworth portion, which comprises much of the selectivity, is a lumped passive filter following the mixer. The less selective equalizer poles are distributed as interstage networks between the IF amplifier stages. Some of the care in realizing the Rimo filter - amplifier system should now be evident. Overloading of the IF amplifier by strong alternate channel signals is reduced to a minimum by placing the selective Butterworth poles in a filter before the first IF amplifier. The less critical low-Q equalizer poles are placed in the IF amplifier beginning with the higher Q poles and ending with the lower Q poles. The single center pole is placed between the last IF stage and the limiter. Reserving the center pole for the final (output) position in a tuned amplifier is common practice, as it gives maximum output capability [14] in the center of the bandpass where it is generally most needed.

An FM tuner must accept signals which vary at the antenna input from levels of less than a microvolt to over a volt, and with this great variation still produce an output which is as free of noise and distortion as possible. Since the information contained in an FM signal is determined by phase only and not by amplitude, it might seem possible in an FM receiver to use a low-noise RF amplifier followed by the mixer, IF amplifier, and detector, and run the whole receiver at full gain at all times, using no AGC. However, under these conditions, when a relatively weak desired channel is being received among several strong near-by channels, all of the signals could arrive limited to the same amplitude level at the detector, causing cross-talk and distortion.

A better situation would result if the receiver were to have a highly selective, closely gain controlled IF amplifier preceding the limiter, and allow the limiter to smooth only the IF response in the desired channel. Off channel signals would then enter the limiter and detector at a lower level than the desired signal determined by the IF selectivity. Somewhat elaborate circuitry is used in the tuner to achieve a very constant input amplitude to the limiter and detector. The radio uses a standard AGC circuit which follows common design practice.

14. Tuned amplifiers generally have an odd number of poles to allow the placing of the single odd pole at the output position.

The remainder of the circuitry in the tuner follows somewhat standard practice. The four-tube front end gives the required 45 db of gain before the first IF grid, with delayed AGC applied to the two RF stages. The 6BA7 mixer, although noisy, has excellent overload capability and good conversion gain. A schematic and performance characteristics of the tuner are presented in the appendix.

The table radio uses a Rimo filter in addition to otherwise orthodox circuitry. Performance data appear in the appendix.

Considerable work on both the tuner and radio remains unfinished, with neither unit in a static condition and both still undergoing constant experimentation. Among some things awaiting further study are a multiplex decoder for the tuner, and an investigation of distortion of the signal caused by imperfect limiting.

CONCLUSION

In the field of minimum-phase filters, the Rimo filter is to phase sensitive signals as the flat-amplitude approximations are to amplitude sensitive signals. Using the charts or the computer program presented in the appendix, the designer may choose the poles of a minimum-phase constant delay filter of any desired selectivity, in a manner exactly analogous to the selection of a minimum-phase flat amplitude filter of any desired selectivity.

In both the tuner and radio, the result of the application of the Rimo filter concept to the IF amplifier design has been gratifying. The performance of the tuner is nothing short of excellent, and the reception of stereo broadcasts[15] from distant stations has been of

[15] An Eico model MX-99multiplex decoder is presently in use with the tuner.

consistently good quality. In many cases, these distant signals are not audible on other tuners due to their poor selectivity.

The Rimp filter concept as presented in this paper is very incomplete - indeed it is only a beginning. The Rimo filter is still in its genesis and much experimentation with the computer program will be necessary before any general conclusions can be made concerning these filters. Among the aspects in consideration for future exploration is the effect of the area weighting function on the amplitude and phase response of Rimo filters.

An important aspect to be pursued is the determination of exact solutions for maximally-flat and equal-ripple time delay filters using the computer program - if such solutions exist.

Current plans call for a continued research in Rimo filters beyond this thesis with the abovementioned ideas forming the basis for the future investigation.

REFERENCES

PARTICULAR

1. Modafferi, R. "A New Design Approach for a Low Distortion 10.7 MC IF Amplifier" Newark College of Engineering, December 1963. (Unpublished)

2. Kuo, F.F. Network Analysis and Synthesis New York: John Wiley & Sons, 1962

GENERAL

3. Tibbs, C & Johnstone, G Frequency Modulation Engineering New York: John Wiley and Sons, 1956 Second Edition, revised.

THE RIMO FILTER

APPENDIX

PERFORMANCE DATA, BUTTERWORTH TUNER

taken from Ref. 1,

page 27.

IHFM SENSITIVITY:	Local: 2uv across 75 ohms Distant: 0.7 uv across 75 ohms
LOCAL OSCILLATOR DRIFT.	Less than 2KC after 5 minute warmup and 10% line voltage change
CAPTURE RATIO:	3 DB
TUNING RANGE:	86.5 to 110 MC
NOISE FIGURE:	distant: 2.1 DB
SPURIOUS RESPONSES:	distant: down at least 60 DB local: down at least 84 DB
INPUT VSWR:	less than 1.2:1 referred to 75 ohm input
RATIO DETECTOR BANDWIDTH:	800 KC peak to peak
AUDIO OUTPUT:	1 volt nominal at 1KC, 100% modulation
SIGNAL TO NOISE RATIO:	70 DB or greater for input 1000 uv

additional data

NUMBER OF VACUUM TUBES	12
NUMBER OF SEMICONDUCTORS	15
HARMONIC DISTORTION:	Less than 0.3% for 100% modulation, 50 CPS to 15KCPS, 1000 uv input

Note: A simpler version of this tuner was constructed, using 11 tubes and three semiconductors, and gave essentially the same performance as listed above. It is still in use.

PERFORMANCE DATA, RIMO FILTER TUNER

IHFM SENSITIVITY:	1.5uv across 75 ohms
LOCAL OSCILLATOR DRIFT:	Less than 2KC after 5 minute warmup and 10% line voltage change
CAPTURE RATIO:	2 DB
TUNING RANGE:	86.5 to 110 MC
NOISE FIGURE:	6 DB
SPURIOUS RESPONSES:	image and second harmonic oscillator conversion, down at least 90 DB; all other spurious down at least 100 DB
INPUT VSWR:	less than 1.2:1 referred to 75 ohms
RATIO DETECTOR BANDWIDTH:	1.5 MC peak to peak
AUDIO OUTPUT:*	2.0 volts nominal at 1KC, 100% modulation
SIGNAL TO NOISE RATIO:	70 DB or greater for input 50 uv

NUMBER OF VACUUM TUBES	14, less multiplex decoder
NUMBER OF SEMICONDUCTORS	5
HARMONIC DISTORTION	essentially unmeasurable in mono or stereo on available test equipment; distortion in stereo mode on frequencies not subharmonically related to 19KC is probably less than 1%
IF BANDWIDTH:	@6DB: 221 KC @60 DB: 594 KC @90 DB: 865 KC

---

* An audio output stage has been added to the tuner and does not appear in the schematic.

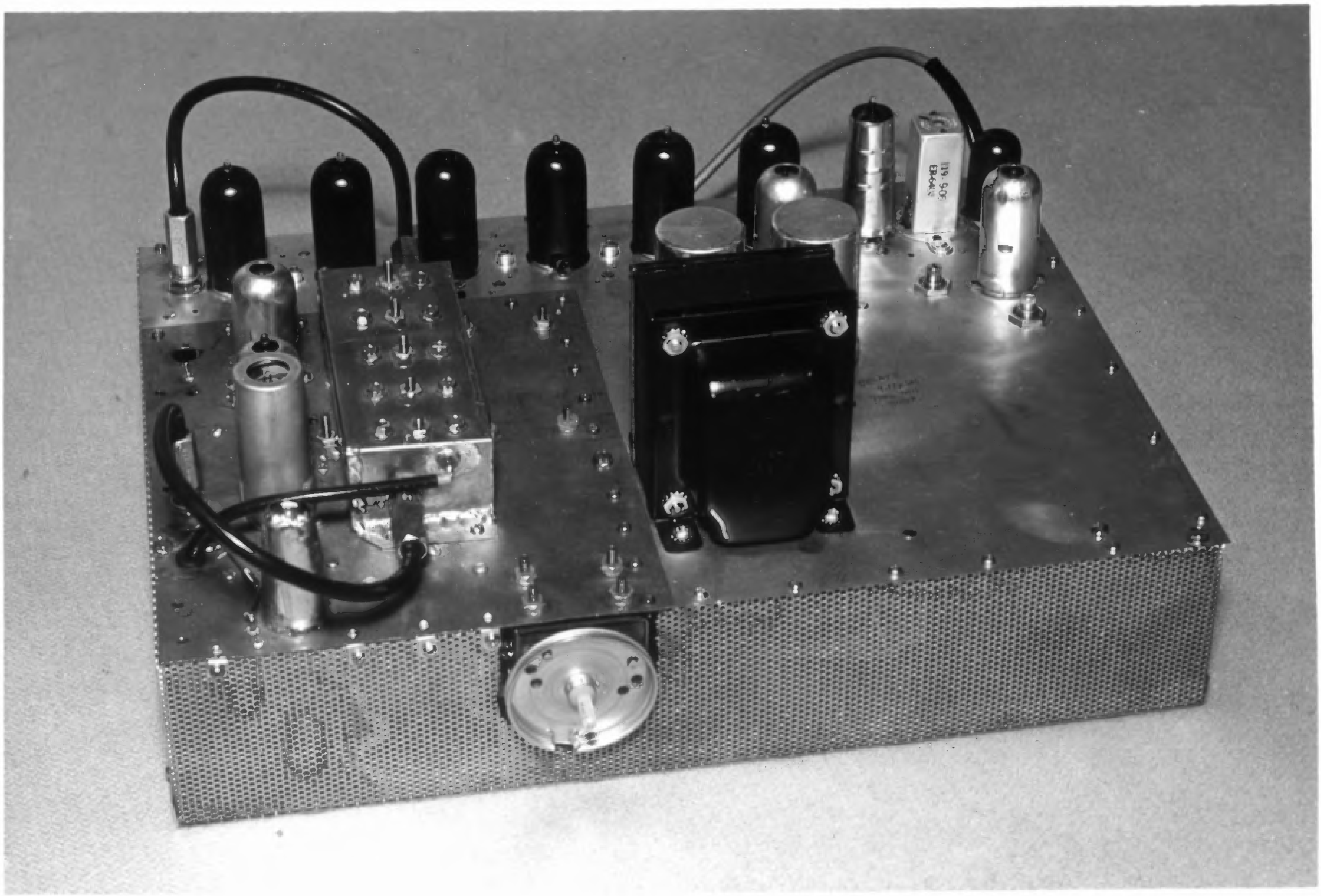

The Rimo filter tuner. The front end chassis, left front, is a carry-over from the original tuner built in 1962. The space on the right front is reserved for a cathode-ray tuning indicator similar to that now used on the Marantz model 10 tuner. An Eico MX-99 multiplex decoder is now in use with this tuner, and present plans are to keep it as its performance is entirely satisfactory.

The rectangular box on top of the front end chassis is the Butterworth filter; note the five trimmer screws. By using a cable and plug format for the filter, it may be easily disconnected and another one substituted; this facilitated experimentation in the early stages of the tuner design.

A4.

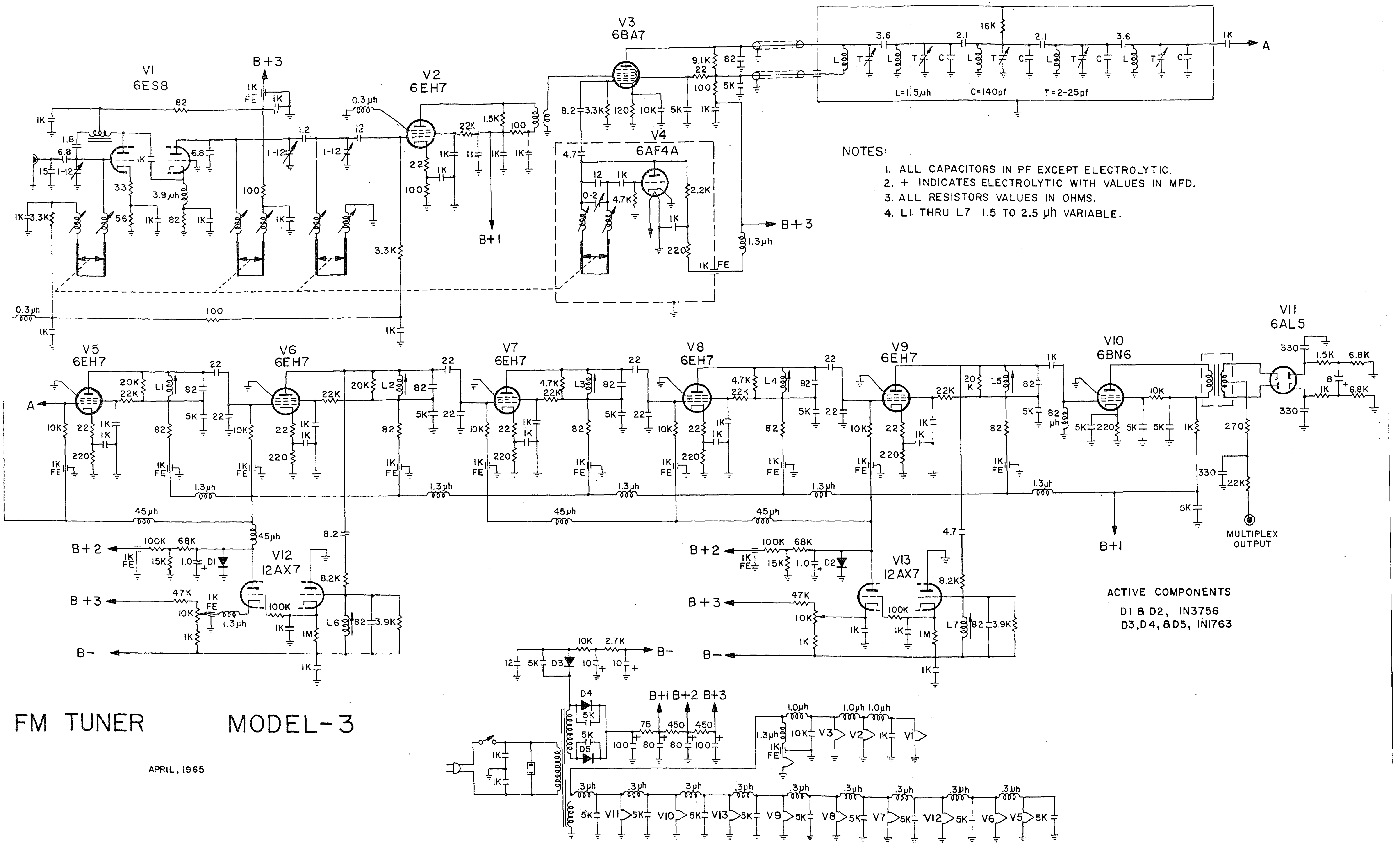

NOTES:

1. ALL CAPACITORS IN PF EXCEPT ELECTROLYTIC.
2. + INDICATES ELECTROLYTIC WITH VALUES IN MFD.
3. ALL RESISTORS VALUES IN OHMS.
4. L1 THRU L7 1.5 TO 2.5 µh VARIABLE.

ACTIVE COMPONENTS

D1 & D2, IN3756
D3, D4, & D5, IN1763

FM TUNER MODEL-3

APRIL, 1965

PERFORMANCE DATA, TABLE RADIO

IHFM SENSITIVITY:	0.5uv across 300 ohms
LOCAL OSCILLATOR DRIFT:	less than 25KC after 10 minutes warmup
CAPTURE RATIO:	6 DB, approx.
TUNING RANGE:	87 to 109 MC
NOISE FIGURE:	2.1 DB
SPURIOUS RESPONSES:	image down at least 35 DB, all other spurious down at least 40 DB
INPUT VSWR:	3:1 approx.
RATIO DETECTOR BANDWIDTH:	300 KC
EFFECTIVE AUDIO FREQUENCY RANGE	100 cycles to 15 KC
AUDIO OUTPUT	3 watts

Note: The front end in this radio has been designed to operate from a built in cabinet antenna, which dictated a design based on highest possible sensitivity. The low-noise RF amplifier now used in the radio was originally used in the old tuner of Ref. 1.

The Rimo filter radio. This experimental radio was built with the idea of incorporating a high quality circuit in a small cabinet, allowing quality FM reception anywhere within reach of a power line outlet. The very high sensitivity of the radio makes good reception possible with the built in antenna, even in weak signal areas. At Liberty, NY, most of the New York City stations were received, at a distance of more than 100 miles.

```
C  C   DELAY EQUALIZATION OF MINIMUM PHASE FILTERS
C  C   MASTERS THESIS BY RICHARD MODAFFERI ADVISOR RH ROSE.
       DIMENSION X(10),Y(10)
       DIMENSION XX(10), YY(10)
       DIMENSION ANG(100)
       DIMENSION ERR(100)
       DIMENSION JERR(100)
       DIMENSION FE(100)
502    INDEX = 0
       POSER =0.
       ERNEG=0.
       KOSFQ=0
       NEGFQ=0
       ERFNC =0.
       FB = 110.
       FEE = 0.
       FEEE = 0.
       CONST = 1.0
       KLUNK = 0
       READ 400, X(1), X(2), X(3), X(4), X(5)
       READ 400, X(6), X(7), X(8), X(9), X(10)
       READ 400, Y(1), Y(2), Y(3), Y(4), Y(5)
       READ 400, Y(6), Y(7), Y(8), Y(9), Y(10)
400    FORMAT(5F8.3)
       READ401,XX(1),XX(2),XX(3),XX(4),XX(5)
       READ401,YY(1),YY(2),YY(3),YY(4),YY(5)
       READ 401, XX(6), XX(7), XX(8), XX(9)
       READ 401,  YY(6), YY(7), YY(8), YY(9)
401    FORMAT(5F8.3)
       READ402, NF, NV, I, NI, MOOD, DELL, COW, MOO
402    FORMAT(I2,4XI2,4XI2,4XI2,4XI2,4XF4.1,2XF3.0,4XI2)
       READ 410, REFER
410    FORMAT (F8.3)
       MOD = MOOD
       M = NI+ 1
       N = I
       NN = NI
       IF(NI) 30, 30, 31
31     NNE = NN - 1
       GO TO 34
30     NNE = NN
34     IF(I) 32, 32, 33
33     NE = N - 1
       GO TO 35
32     NE = N
35     NSFP = NE
       NSVP = NNE
       DEL = DELL
10     IF (MOD - 3) 250, 263, 263
263    M = M + 1
       KLUNK = 0
```

```
      DEL = DELL
      MOD = MOOD
      INDIX = INDEX - 1
      PUNCH 102, INDIX, ERRA, ERRB, ERRC, ERRD, ERRE, ERRG
102   FORMAT (I5,6E10.3)
      PUNCH 103, ERRH, ERRI, ERRJ, ERRK, ERRL, ERRM, ERRN
      PUNCH 103, ERRO, ERRP, ERRQ, ERRR, ERRS, ERRT, ERRU
103   FORMAT(7E10.3)
      IF(NI) 555, 555, 556
555   MM = M
      GO TO 557
556   MM = M - 1
557   IF(NV - MM) 300, 255, 255
250   K = 1
      IF (SENSE SWITCH 2) 500, 501
500   PAUSE
      IF (SENSE SWITCH 3) 502, 501
501   IF (SENSE SWITCH 1 ) 20,21
20    PRINT 3
3     FORMAT (17H INSERT CONST, FB)
      ACCEPT 4, CONST, FB
4     FORMAT(F5.3, F3.0)
21    F = K
      IF (INDEX) 22, 22, 23
22    N = N + 1
      NSFP = NSFP + 1
      IF (NF - N) 23, 25, 25
25    FEE = FEE + ATANF((Y(N) -F)/X(N))
      IF(NSFP - NF) 22, 24, 24
24    FE(K) = FEE
23    NN = NN + 1
      NSVP = NSVP + 1
      FEEE = FEEE + ATANF((YY(NN)-F)/XX(NN))
      IF(NSVP - NV) 23, 13, 13
13    IF (NF) 14, 14, 15
14    ANG(K) = FEEE
      GO TO 16
15    ANG(K) = FE(K) + FEEE
16    FEE = 0.
      FEEE = 0.
      N = I
      NN = NI
      NSFP = NE
      NSVP = NNE
      IF(INDEX) 998,998,999
998   ANGL = ANG(1)
999   ERR(K) =ANG(K) - ANGL*F
      DELTA = CONST * ERR(K) * (FB - F)
      DELTA = ABSF(DELTA)
      ERFNC = ERFNC + DELTA
      JERR(K) = 10000.*ERR(K)
      IF(JERR(K)) 60,62,58
58    IF (ERR(K) - POSER) 62, 62, 59
59    POSER = ERR(K)
```

```
      KOSFQ = K
      GO TO 62
60    IF (ERNEG + ERR(K)) 61, 62, 62
61    ERNEG = -ERR(K)
      NEGFQ = K
62    IF(K-100) 63, 64, 65
65    PRINT 104
104   FORMAT(22H FREQUENCY EXCEEDS 100)
      PAUSE
      GO TO 502
63    K = K + 1
      GO TO 21
64    INDEX = INDEX + 1
      PUNCH 100, INDEX, POSER, KOSFQ, ERNEG, NEGFQ
100   FORMAT(I10,E10.3,I10,E10.3,I10)
      PUNCH 101, XX(1),XX(2),XX(3),XX(4),XX(5)
      PUNCH 101, YY(1),YY(2),YY(3),YY(4),YY(5)
101   FORMAT(5F8.3)
      IF(NV - 5) 149, 149, 150
150   PUNCH 101, XX(6), XX(7), XX(8), XX(9)
      PUNCH 101, YY(6), YY(7), YY(8), YY(9)
149   PUNCH 997, ERFNC, REFER
997   FORMAT (2F20.3)
      IF(ERFNC - REFER) 333, 333, 251
333   KLUNK = KLUNK + 1
      GO TO 252
251   IF(KLUNK) 258, 258, 259
258   DEL = -DEL
      KLUNK = KLUNK + 1
      GO TO 252
259   MOD = MOD + 1
      IF(MOD - 3) 249, 264, 264
264   DEL = -DEL
      GO TO 275
249   DEL = -DEL/3.
252   REFER = ERFNC
      ERRA = ERR(5)
      ERRB = ERR(10)
      ERRC = ERR(15)
      ERRD = ERR(20)
      ERRE = ERR(25)
      ERRG = ERR(30)
      ERRH = ERR(35)
      ERRI = ERR(40)
      ERRJ = ERR(45)
      ERRK = ERR(50)
      ERRL = ERR(55)
      ERRM = ERR(60)
      ERRN = ERR(65)
      ERRO = ERR(70)
      ERRP = ERR(75)
      ERRQ = ERR(80)
      ERRR = ERR(85)
      ERRS = ERR(90)
```

```
      ERRT = ERR(95)
      ERRU = ERR(100)
275   ERFNC = 0.
      POSER = 0.
      ERNEG = 0.
      KOSFQ = 0
      NEGFQ = 0
255   GO TO (253, 260, 280, 270, 290, 261, 262, 266, 265), M
253   XX(1) = XX(1) + DEL
      GO TO 10
260   XX(2) = XX(2) + DEL
      XX(3) = XX(3) + DEL
      GO TO 10
280   YY(2) = YY(2) + DEL
      YY(3) = YY(3) - DEL
      GO TO 10
270   XX(4) = XX(4) + DEL
      XX(5) = XX(5) + DEL
      GO TO 10
290   YY(4) = YY(4) + DEL
      YY(5) = YY(5) - DEL
      GO TO 10
261   XX(6) = XX(6) + DEL
      XX(7) = XX(7) + DEL
      GO TO 10
262   YY(6) = YY(6) + DEL
      YY(7) = YY(7) - DEL
      GO TO 10
266   XX(8) = XX(8) + DEL
      XX(9) = XX(9) + DEL
      GO TO 10
265   YY(8) = YY(8) + DEL
      YY(9) = YY(9) - DEL
      GO TO 10
300   M = NI + 1
      PRINT 77
77    FORMAT(31H X-Y POLE SHIFT CYCLE COMPLETE.)
      COW = COW + 1.
      IF (COW - 1.5) 5, 5, 6
6     MOOD = MOOD + 1
5     MOO = MOO + 1
      IF (MOO - 4) 301, 106, 106
301   DELL = DELL/3.0
      DEL = DELL
      MOD = MOOD
      GO TO 275
106   PRINT 107
107   FORMAT (47H FINAL XY POLE CYCLE COMPLETE. NEW DATA NEEDED.)
      PUNCH 108, ANGL
108   FORMAT(E14.6)
      GO TO 502
      END
```

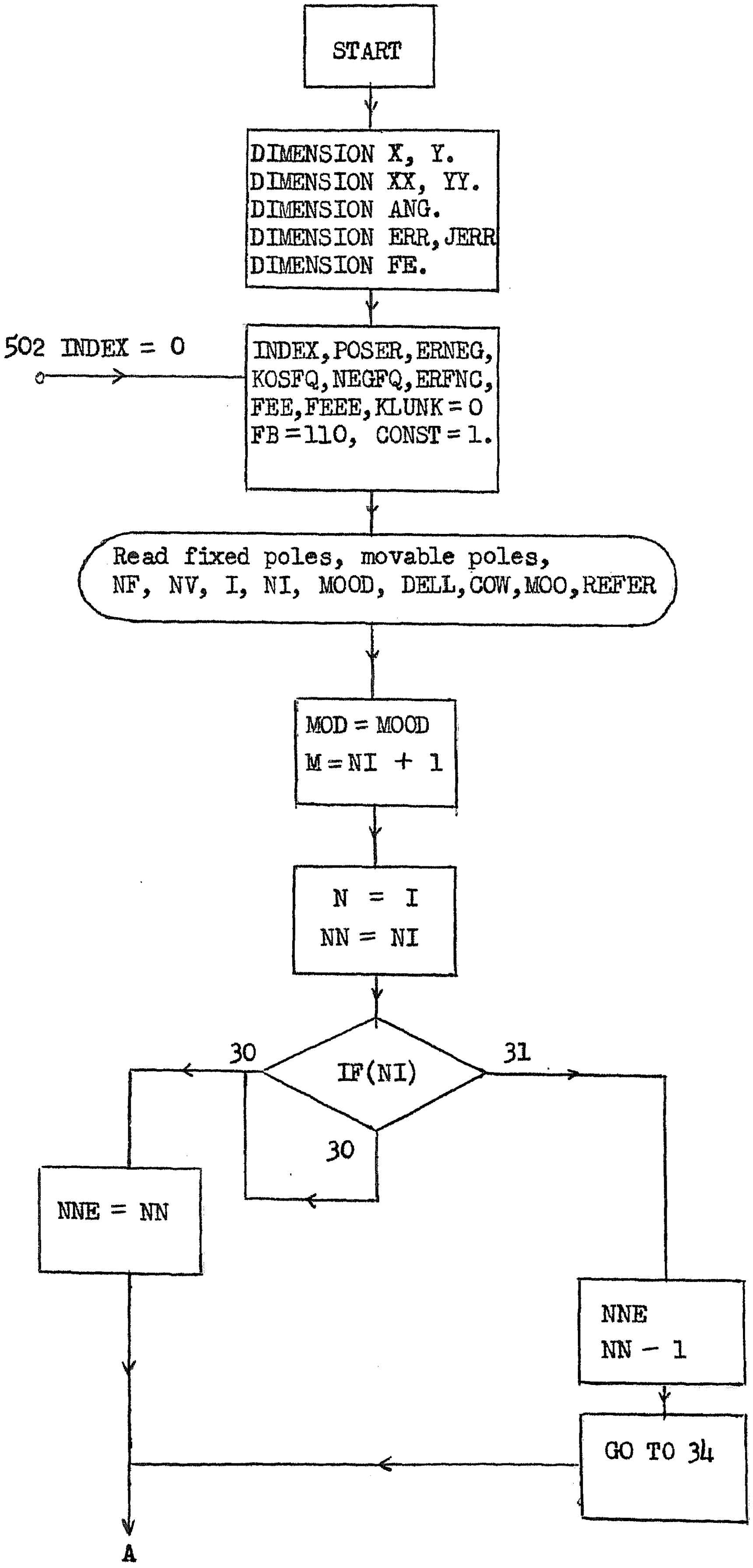
START
DIMENSION X, Y.
DIMENSION XX, YY.
DIMENSION ANG.
DIMENSION ERR, JERR
DIMENSION FE.
502 INDEX = 0
INDEX, POSER, ERNEG,
KOSFQ, NEGFQ, ERFNC,
FEE, FEEE, KLUNK = 0
FB = 110, CONST = 1.
Read fixed poles, movable poles,
NF, NV, I, NI, MOOD, DELL, COW, MOO, REFER
MOD = MOOD
M = NI + 1
N = I
NN = NI
IF(NI)
30
30
31
NNE = NN
NNE
NN − 1
GO TO 34
A

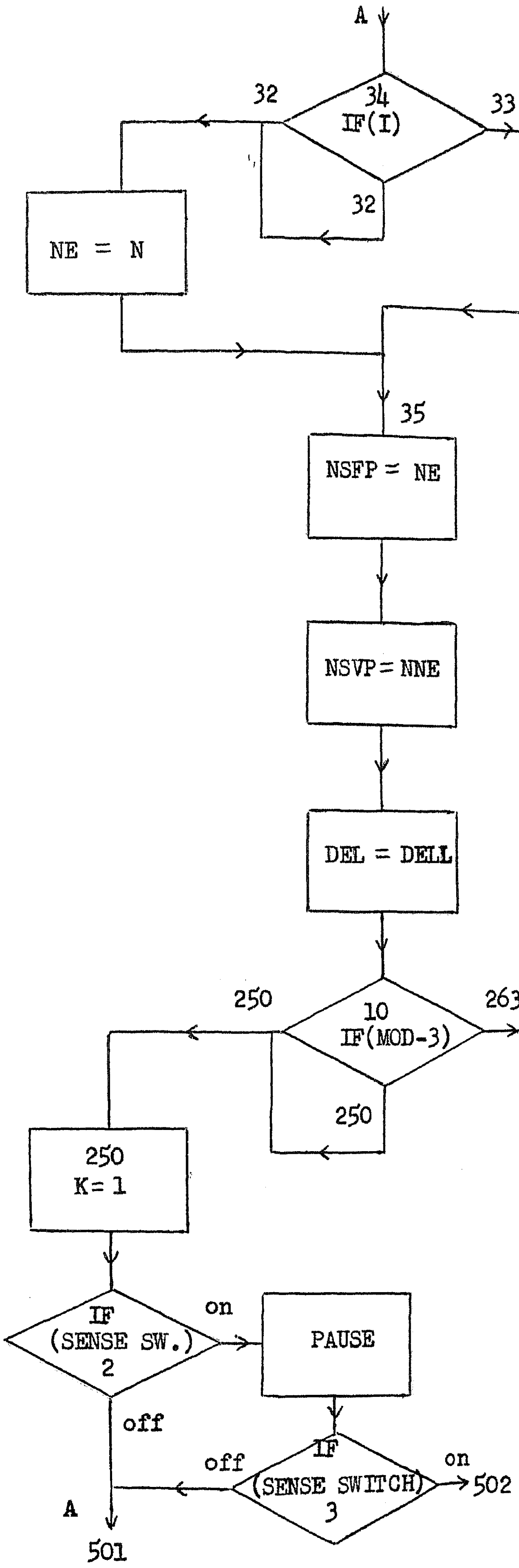
A
34
IF(I)
32
33
NE
N -1
32
NE = N
GO TO 35
35
NSFP = NE
NSVP = NNE
DEL = DELL
10
IF(MOD-3)
250
263
M = M+1
KLUNK 0
250
250
K = 1
DEL = DELL
MOD = MOOD
INDIX =
INDEX
-1
IF
(SENSE SW.)
2
on
PAUSE
off
IF
(SENSE SWITCH)
3
off
on
502
A
501
B

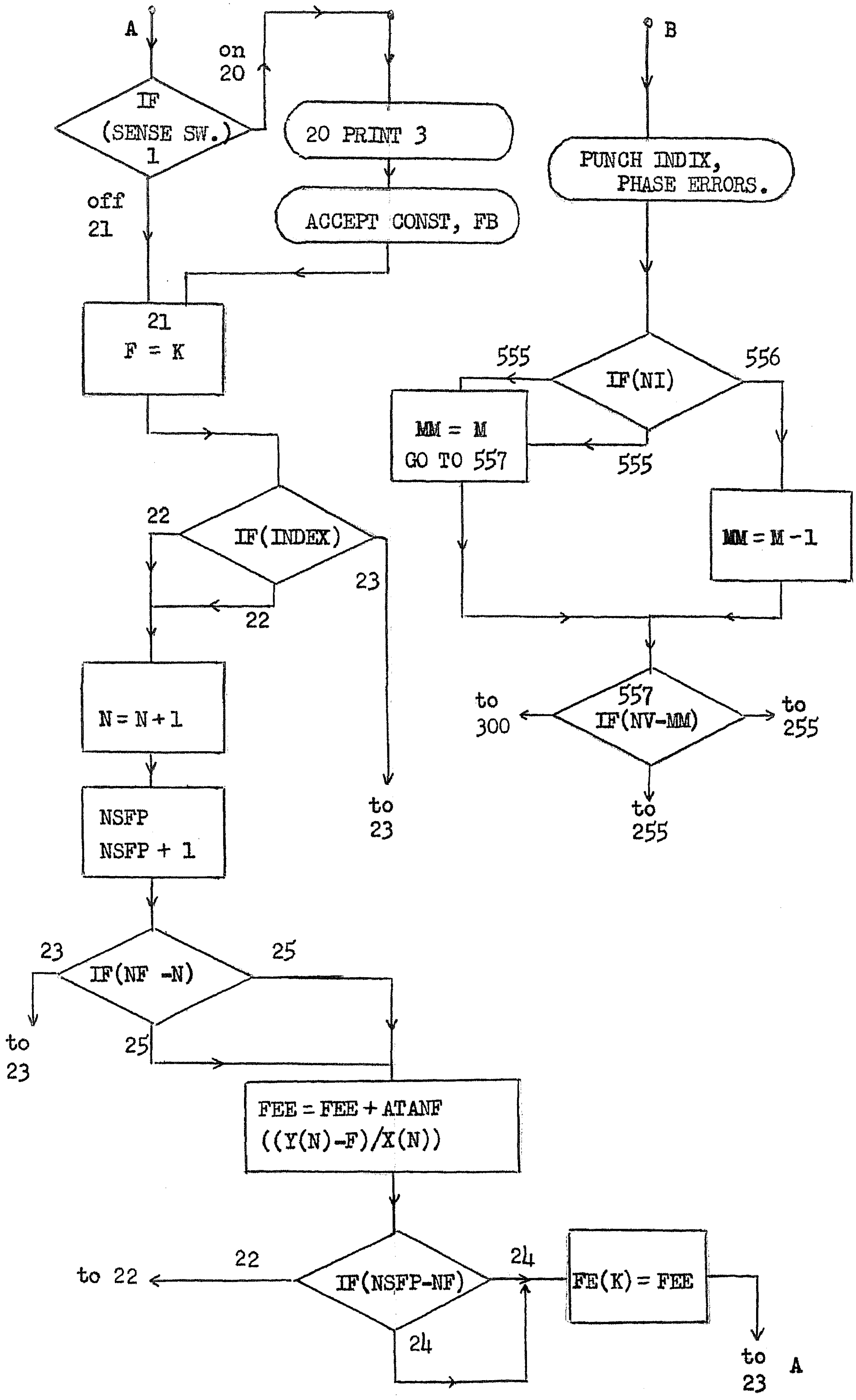
A
on
20
IF
(SENSE SW.)
1
off
21
20 PRINT 3
ACCEPT CONST, FB
21
F = K
B
PUNCH INDIX,
PHASE ERRORS.
555
IF(NI)
556
MM = M
GO TO 557
555
MM = M -1
22
IF(INDEX)
23
22
N = N + 1
to
23
to
300
557
IF(NV-MM)
to
255
to
255
NSFP
NSFP + 1
23
IF(NF -N)
25
to
23
25
FEE = FEE + ATANF
((Y(N)-F)/X(N))
22
to 22
IF(NSFP-NF)
24
FE(K) = FEE
24
to
23
A

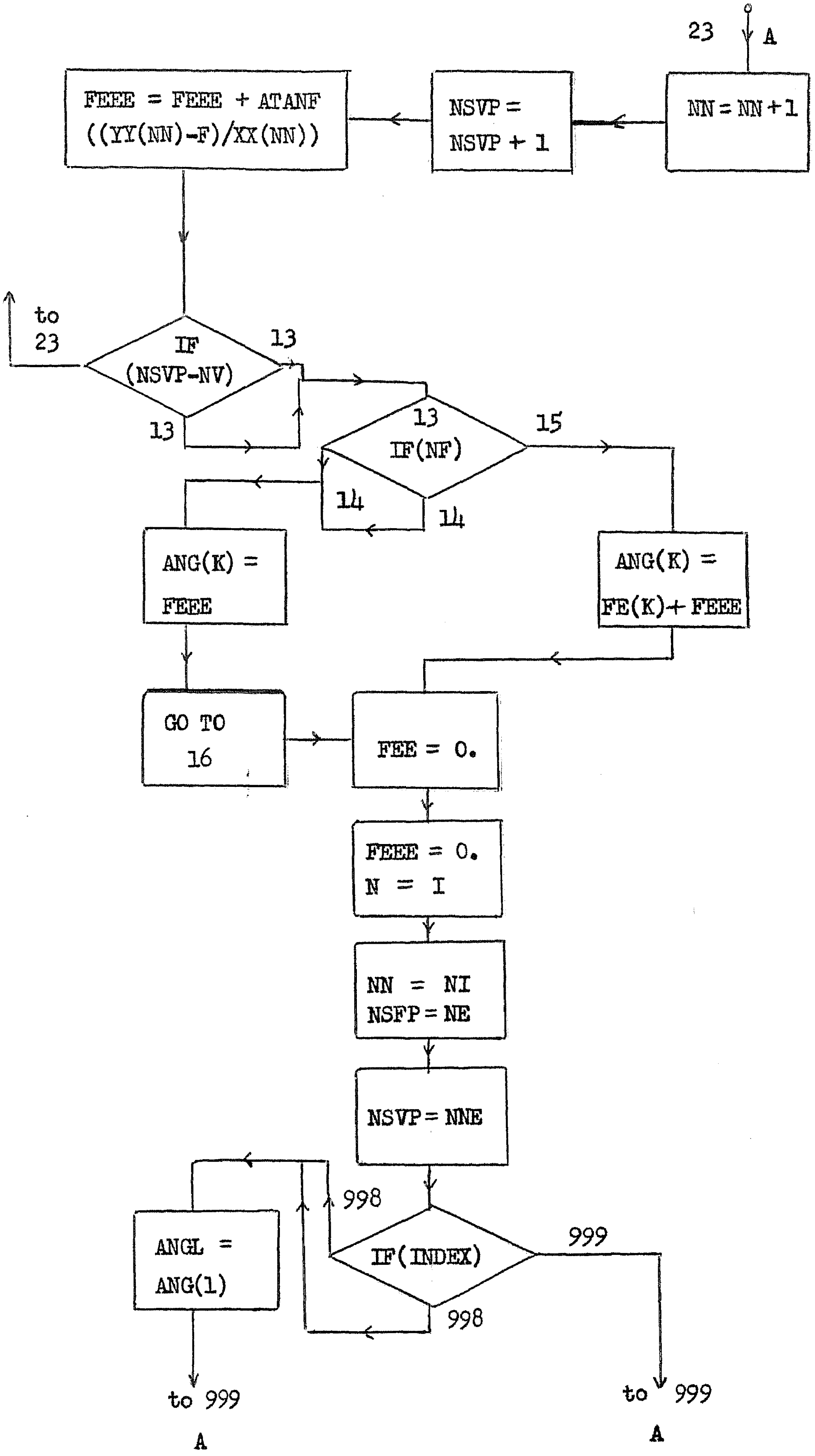
23
A
NN = NN + 1
NSVP =
NSVP + 1
FEEE = FEEE + ATANF
((YY(NN)-F)/XX(NN))
to
23
IF
(NSVP-NV)
13
13
13
IF(NF)
15
14
14
ANG(K) =
FEEE
ANG(K) =
FE(K)+ FEEE
GO TO
16
FEE = 0.
FEEE = 0.
N = I
NN = NI
NSFP = NE
NSVP = NNE
998
IF(INDEX)
999
998
ANGL =
ANG(1)
to 999
A
to 999
A

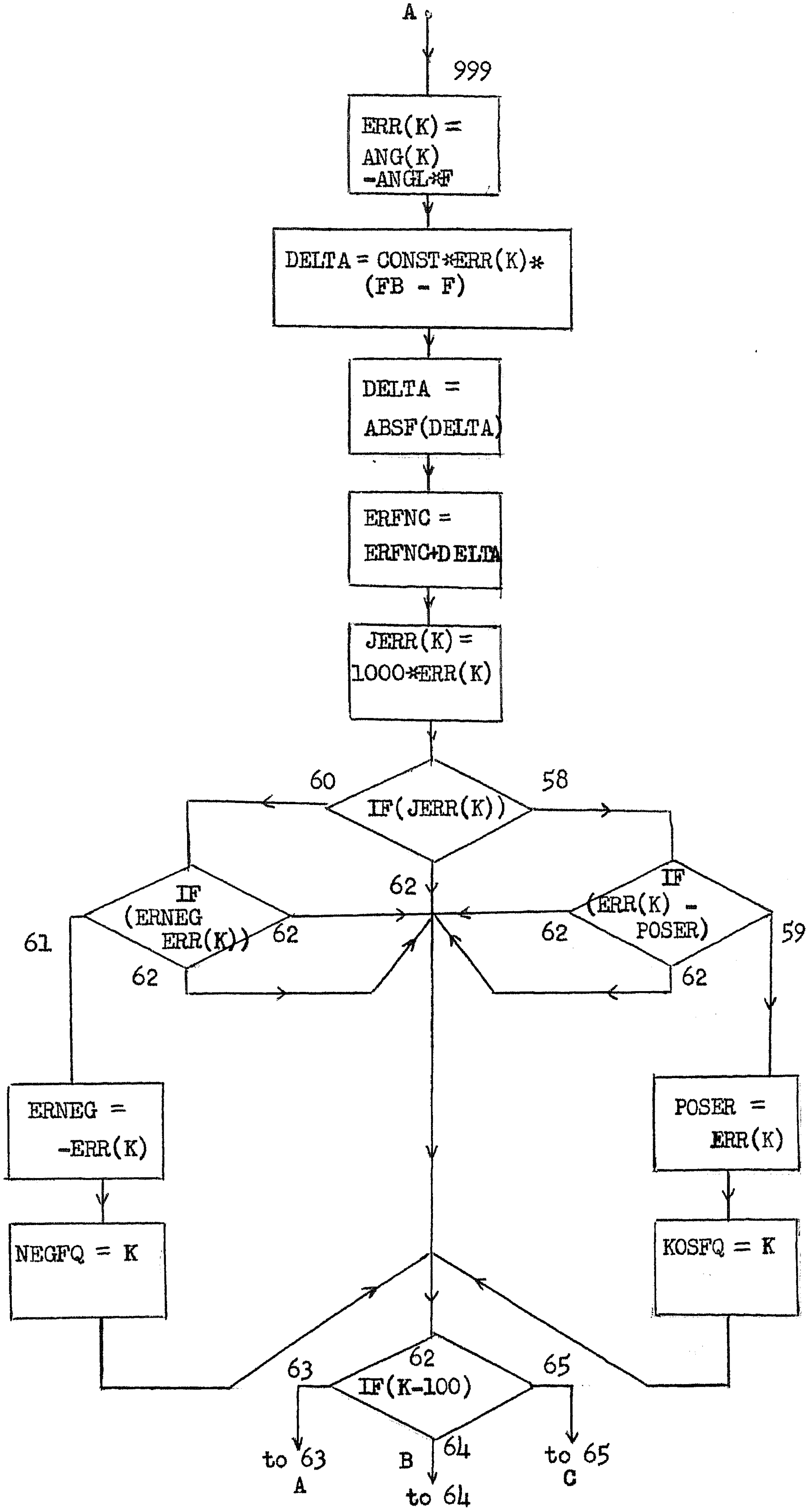
A
999
ERR(K) = ANG(K) -ANGL*F
DELTA = CONST*ERR(K)* (FB - F)
DELTA = ABSF(DELTA)
ERFNC = ERFNC+DELTA
JERR(K) = 1000*ERR(K)
60
IF(JERR(K))
58
62
IF (ERNEG ERR(K))
61
62
62
IF (ERR(K) - POSER)
62
62
59
ERNEG = -ERR(K)
NEGFQ = K
POSER = ERR(K)
KOSFQ = K
63
62
IF(K-100)
65
to 63
A
B
64
to 64
to 65
C

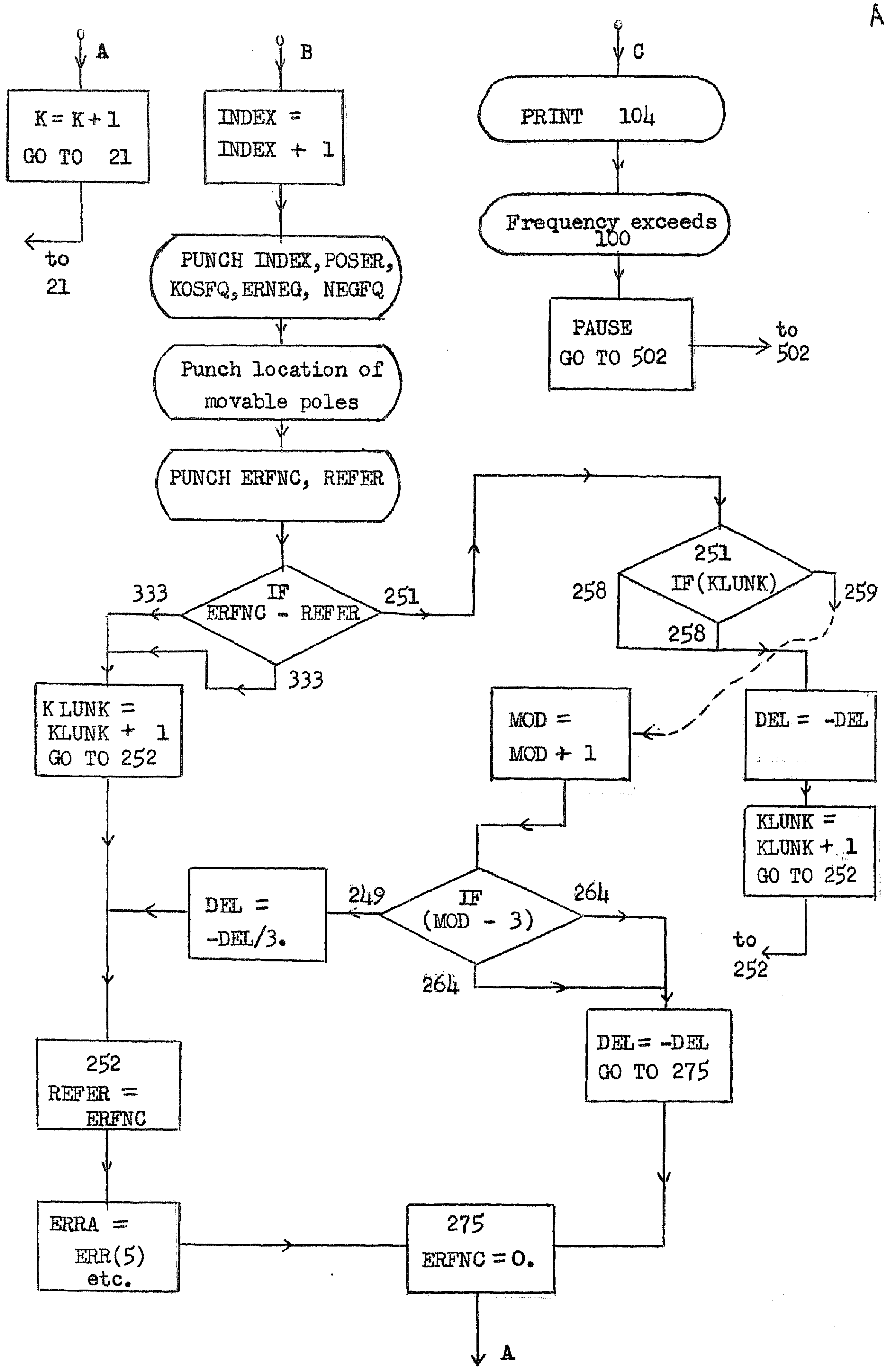
A
K = K + 1
GO TO 21
to
21
B
INDEX =
INDEX + 1
PUNCH INDEX, POSER,
KOSFQ, ERNEG, NEGFQ
Punch location of
movable poles
PUNCH ERFNC, REFER
IF
ERFNC - REFER
333
251
333
K LUNK =
KLUNK + 1
GO TO 252
C
PRINT 104
Frequency exceeds
100
PAUSE
GO TO 502
to
502
251
IF (KLUNK)
258
258
259
MOD =
MOD + 1
DEL = -DEL
KLUNK =
KLUNK + 1
GO TO 252
to
252
DEL =
-DEL/3.
249
IF
(MOD - 3)
264
264
DEL = -DEL
GO TO 275
252
REFER =
ERFNC
ERRA =
ERR(5)
etc.
275
ERFNC = 0.
A

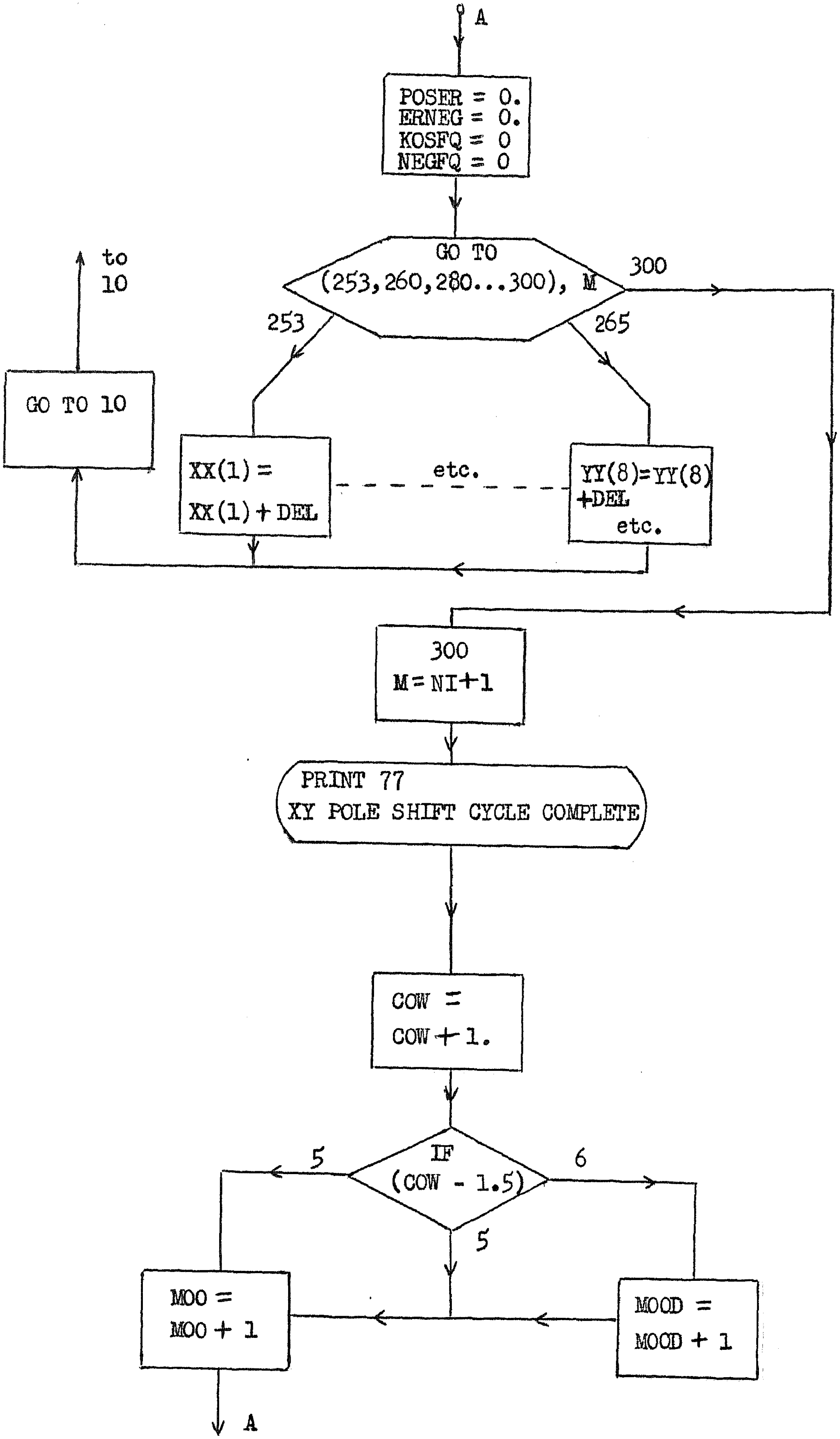
A
POSER = 0.
ERNEG = 0.
KOSFQ = 0
NEGFQ = 0
GO TO
(253,260,280...300), M
300
253
265
to
10
GO TO 10
XX(1) =
XX(1) + DEL
etc.
YY(8)=YY(8)
+DEL
etc.
300
M=NI+1
PRINT 77
XY POLE SHIFT CYCLE COMPLETE
COW =
COW + 1.
IF
(COW - 1.5)
5
6
5
MOO =
MOO + 1
MOOD =
MOOD + 1
A

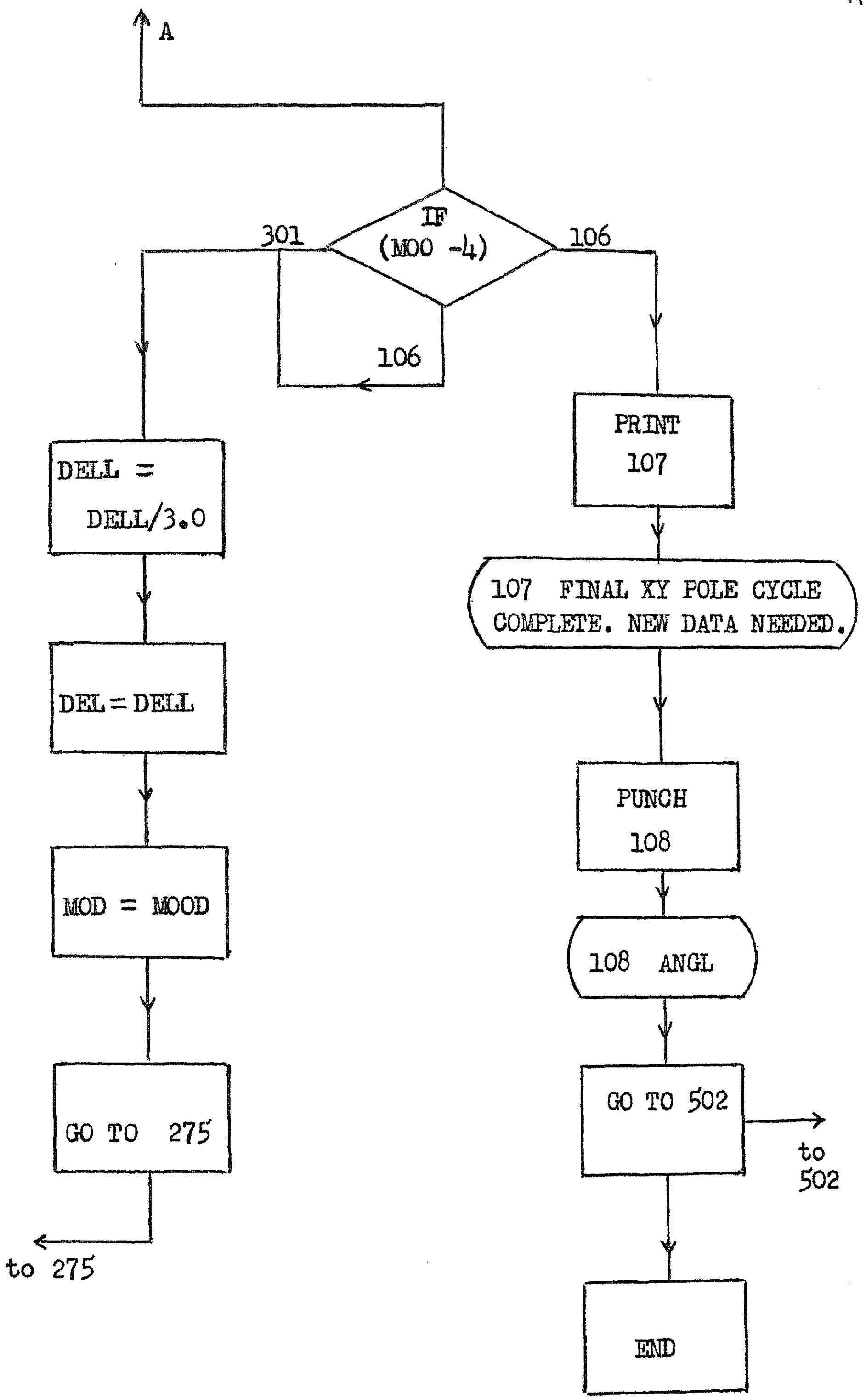
A
IF (MOO -4)
301
106
106
DELL = DELL/3.0
DEL = DELL
MOD = MOOD
GO TO 275
to 275
PRINT 107
107 FINAL XY POLE CYCLE COMPLETE. NEW DATA NEEDED.
PUNCH 108
108 ANGL
GO TO 502
to 502
END

```
    TRIMMING TEST ON TUNER DESIGN.  MAY 7, 1965.
          1 2.123E-02          56 1.750E-01        100
100.000  99.000  99.000 154.000 154.000
  0.000  30.500 -30.500 107.000-107.000
            83.811                1715.966
          2 3.260E-02          57 1.617E-01        100
102.700  99.000  99.000 154.000 154.000
  0.000  30.500 -30.500 107.000-107.000
           111.874                  83.811
          3 2.885E-02          57 1.661E-01        100
101.800  99.000  99.000 154.000 154.000
  0.000  30.500 -30.500 107.000-107.000
           102.341                 111.874
          4 2.506E-02          57 1.705E-01        100
100.900  99.000  99.000 154.000 154.000
  0.000  30.500 -30.500 107.000-107.000
            92.968                 102.341
          5 2.123E-02          56 1.750E-01        100
100.000  99.000  99.000 154.000 154.000
  0.000  30.500 -30.500 107.000-107.000
            83.811                  92.968
          6 1.736E-02          56 1.795E-01        100
 99.100  99.000  99.000 154.000 154.000
  0.000  30.500 -30.500 107.000-107.000
            76.497                  83.811
          7 1.345E-02          56 1.841E-01        100
 98.200  99.000  99.000 154.000 154.000
  0.000  30.500 -30.500 107.000-107.000
            72.439                  76.497
          8 9.494E-03          55 1.887E-01        100
 97.300  99.000  99.000 154.000 154.000
  0.000  30.500 -30.500 107.000-107.000
            71.790                  72.439
          9 5.503E-03          55 1.933E-01        100
 96.400  99.000  99.000 154.000 154.000
  0.000  30.500 -30.500 107.000-107.000
            74.858                  71.790
         10 6.840E-03          55 1.918E-01        100
 96.700  99.000  99.000 154.000 154.000
  0.000  30.500 -30.500 107.000-107.000
            73.393                  74.858
         11 8.170E-03          55 1.902E-01        100
 97.000  99.000  99.000 154.000 154.000
  0.000  30.500 -30.500 107.000-107.000
            72.375                  73.393
         12 9.494E-03          55 1.887E-01        100
 97.300  99.000  99.000 154.000 154.000
  0.000  30.500 -30.500 107.000-107.000
            71.790                  72.375
         13 1.081E-02          55 1.871E-01        100
```

```
  97.600   99.000   99.000 154.000 154.000                                 50
   0.000   30.500  -30.500 107.000-107.000                                 51
               71.627               71.790                                 52
         14 1.213E-02          56 1.856E-01          100                   53
  97.900   99.000   99.000 154.000 154.000                                 54
   0.000   30.500  -30.500 107.000-107.000                                 55
               71.839               71.627                                 56
    13-1.194E-03-2.171E-03-2.728E-03-2.699E-03-1.967E-03-4.894E-04
  1.680E-03 4.357E-03 7.191E-03 9.618E-03 1.081E-02 9.642E-03 4.672E-0
-5.760E-03-2.328E-02-4.895E-02-8.236E-02-1.206E-01-1.582E-01-1.871E-0
         15 3.068E-02          58 1.615E-01          100                   60
  97.600 101.700 101.700 154.000 154.000                                   61
   0.000   30.500  -30.500 107.000-107.000                                 62
              103.312               71.627                                 63
         16 1.081E-02          55 1.871E-01          100                   64
  97.600   99.000   99.000 154.000 154.000                                 65
   0.000   30.500  -30.500 107.000-107.000                                 66
               71.627              103.312                                 67
         17 0.000E-99           0 2.134E-01          100                   68
  97.600   96.300   96.300 154.000 154.000                                 69
   0.000   30.500  -30.500 107.000-107.000                                 70
              122.869               71.627                                 71
         18 0.000E-99           0 2.046E-01          100                   72
  97.600   97.200   97.200 154.000 154.000                                 73
   0.000   30.500  -30.500 107.000-107.000                                 74
               96.319              122.869                                 75
         19 4.153E-03          55 1.958E-01          100                   76
  97.600   98.100   98.100 154.000 154.000                                 77
   0.000   30.500  -30.500 107.000-107.000                                 78
               76.518               96.319                                 79
         20 1.081E-02          55 1.871E-01          100                   80
  97.600   99.000   99.000 154.000 154.000                                 81
   0.000   30.500  -30.500 107.000-107.000                                 82
               71.627               76.518                                 83
         21 1.746E-02          56 1.785E-01          100                   84
  97.600   99.900   99.900 154.000 154.000                                 85
   0.000   30.500  -30.500 107.000-107.000                                 86
               75.934               71.627                                 87
         22 1.525E-02          56 1.814E-01          100                   88
  97.600   99.600   99.600 154.000 154.000                                 89
   0.000   30.500  -30.500 107.000-107.000                                 90
               73.577               75.934                                 91
         23 1.303E-02          56 1.842E-01          100                   92
  97.600   99.300   99.300 154.000 154.000                                 93
   0.000   30.500  -30.500 107.000-107.000                                 94
               72.129               73.577                                 95
         24 1.081E-02          55 1.871E-01          100                   96
  97.600   99.000   99.000 154.000 154.000                                 97
   0.000   30.500  -30.500 107.000-107.000                                 98
               71.627               72.129                                 99
```

```
           23 8.061E-03             55 1.900E-01         100                    100
  97.600   98.700   98.700 154.000  154.000                                     101
   0.000   30.500  -30.500 107.000-107.000                                      102
              72.123                71.627                                      103
      24-1.194E-03-2.171E-03-2.728E-03-2.699E-03-1.967E-03-4.894E-04
    1.689E-03 4.357E-03 7.191E-03 9.618E-03 1.061E-02 9.642E-03 4.672E-03
 -5.767E-03-2.328E-02-4.895E-02-8.236E-02-1.206E-01-1.582E-01-1.871E-01
           26 2.129E-02             56 1.785E-01         100                    107
  97.600   99.000   99.000 154.000  154.000                                     108
   0.000   33.200  -33.200 107.000-107.000                                      109
              87.565                71.627                                      110
           27 1.081E-02             55 1.871E-01         100                    111
  97.600   99.000   99.000 154.000  154.000                                     112
   0.000   30.500  -30.500 107.000-107.000                                      113
              71.627                87.565                                      114
           28 1.114E-03             55 1.951E-01         100                    115
  97.600   99.000   99.000 154.000  154.000                                     116
   0.000   27.800  -27.800 107.000-107.000                                      117
              83.871                71.627                                      118
           29 4.261E-03             55 1.925E-01         100                    119
  97.600   99.000   99.000 154.000  154.000                                     120
   0.000   28.700  -28.700 107.000-107.000                                      121
              76.775                83.871                                      122
           30 7.494E-03             55 1.899E-01         100                    123
  97.600   99.000   99.000 154.000  154.000                                     124
   0.000   29.600  -29.600 107.000-107.000                                      125
              72.762                76.775                                      126
           31 1.081E-02             55 1.871E-01         100                    127
  97.600   99.000   99.000 154.000  154.000                                     128
   0.000   30.500  -30.500 107.000-107.000                                      129
              71.627                72.762                                      130
           32 1.422E-02             56 1.843E-01         100                    131
  97.600   99.000   99.000 154.000  154.000                                     132
   0.000   31.400  -31.400 107.000-107.000                                      133
              73.489                71.627                                      134
           33 1.307E-02             56 1.853E-01         100                    135
  97.600   99.000   99.000 154.000  154.000                                     136
   0.000   31.100  -31.100 107.000-107.000                                      137
              72.523                73.489                                      138
           34 1.193E-02             56 1.862E-01         100                    139
  97.600   99.000   99.000 154.000  154.000                                     140
   0.000   30.800  -30.800 107.000-107.000                                      141
              71.889                72.523                                      142
           35 1.081E-02             55 1.871E-01         100                    143
  97.600   99.000   99.000 154.000  154.000                                     144
   0.000   30.500  -30.500 107.000-107.000                                      145
              71.627                71.889                                      146
           36 9.696E-03             55 1.880E-01         100                    147
  97.600   99.000   99.000 154.000  154.000                                     148
   0.000   30.200  -30.200 107.000-107.000                                      149
```

```
                71.671                  71.627                              150
      35-1.194E-03-2.171E-03-2.728E-03-2.699E-03-1.967E-03-4.894E-04
   1.680E-03 4.357E-03 7.191E-03 9.618E-03 1.081E-02 9.642E-03 4.672E-03
  -5.760E-03-2.328E-02-4.695E-02-8.236E-02-1.206E-01-1.582E-01-1.871E-01
           37 1.433E-02           56 1.796E-01          100                 154
    97.600   99.000   99.000 156.700 156.700                                155
     0.000   30.500  -30.500 107.000-107.000                                156
                71.792                  71.627                              157
           38 1.081E-02           55 1.871E-01          100                 158
    97.600   99.000   99.000 154.000 154.000                                159
     0.000   30.500  -30.500 107.000-107.000                                160
                71.627                  71.792                              161
           39 7.382E-03           55 1.948E-01          100                 162
    97.600   99.000   99.000 151.300 151.300                                163
     0.000   30.500  -30.500 107.000-107.000                                164
                73.537                  71.627                              165
           40 8.523E-03           55 1.922E-01          100                 166
    97.600   99.000   99.000 152.200 152.200                                167
     0.000   30.500  -30.500 107.000-107.000                                168
                72.643                  73.537                              169
           41 9.666E-03           55 1.897E-01          100                 170
    97.600   99.000   99.000 153.100 153.100                                171
     0.000   30.500  -30.500 107.000-107.000                                172
                72.010                  72.643                              173
           42 1.081E-02           55 1.871E-01          100                 174
    97.600   99.000   99.000 154.000 154.000                                175
     0.000   30.500  -30.500 107.000-107.000                                176
                71.627                  72.010                              177
           43 1.198E-02           56 1.846E-01          100                 178
    97.600   99.000   99.000 154.900 154.900                                179
     0.000   30.500  -30.500 107.000-107.000                                180
                71.460                  71.627                              181
           44 1.315E-02           56 1.821E-01          100                 182
    97.600   99.000   99.000 155.800 155.800                                183
     0.000   30.500  -30.500 107.000-107.000                                184
                71.501                  71.460                              185
           45 1.276E-02           56 1.829E-01          100                 186
    97.600   99.000   99.000 155.500 155.500                                187
     0.000   30.500  -30.500 107.000-107.000                                188
                71.471                  71.501                              189
           46 1.237E-02           56 1.838E-01          100                 190
    97.600   99.000   99.000 155.200 155.200                                191
     0.000   30.500  -30.500 107.000-107.000                                192
                71.459                  71.471                              193
           47 1.198E-02           56 1.846E-01          100                 194
    97.600   99.000   99.000 154.900 154.900                                195
     0.000   30.500  -30.500 107.000-107.000                                196
                71.460                  71.459                              197
      46-1.074E-03-1.930E-03-2.365E-03-2.209E-03-1.347E-03 2.658E-04
   2.576E-03 5.401E-03 8.390E-03 1.097E-02 1.234E-02 1.135E-02 6.568E-03
  -3.672E-03-2.099E-02-4.645E-02-7.965E-02-1.177E-01-1.550E-01-1.838E-01
```

```
          48 1.983E-02           57 1.726E-01         100                 201
 97.600   99.000   99.000 155.200 155.200                                 202
  0.000   30.500  -30.500 109.700-109.700                                 203
             77.730                71.459                                 204
          49 1.237E-02           56 1.838E-01         100                 205
 97.600   99.000   99.000 155.200 155.200                                 206
  0.000   30.500  -30.500 107.000-107.000                                 207
             71.459                77.730                                 208
          50 5.019E-03           55 1.948E-01         100                 209
 97.600   99.000   99.000 155.200 155.200                                 210
  0.000   30.500  -30.500 104.300-104.300                                 211
             75.272                71.459                                 212
          51 7.462E-03           55 1.911E-01         100                 213
 97.600   99.000   99.000 155.200 155.200                                 214
  0.000   30.500  -30.500 105.200-105.200                                 215
             72.716                75.272                                 216
          52 9.903E-03           55 1.874E-01         100                 217
 97.600   99.000   99.000 155.200 155.200                                 218
  0.000   30.500  -30.500 106.100-106.100                                 219
             71.479                72.716                                 220
          53 1.237E-02           56 1.838E-01         100                 221
 97.600   99.000   99.000 155.200 155.200                                 222
  0.000   30.500  -30.500 107.000-107.000                                 223
             71.459                71.479                                 224
          54 1.485E-02           56 1.800E-01         100                 225
 97.600   99.000   99.000 155.200 155.200                                 226
  0.000   30.500  -30.500 107.900-107.900                                 227
             72.525                71.459                                 228
          55 1.402E-02           56 1.813E-01         100                 229
 97.600   99.000   99.000 155.200 155.200                                 230
  0.000   30.500  -30.500 107.600-107.600                                 231
             72.050                72.525                                 232
          56 1.320E-02           56 1.825E-01         100                 233
 97.600   99.000   99.000 155.200 155.200                                 234
  0.000   30.500  -30.500 107.300-107.300                                 235
             71.674                72.050                                 236
          57 1.237E-02           56 1.838E-01         100                 237
 97.600   99.000   99.000 155.200 155.200                                 238
  0.000   30.500  -30.500 107.000-107.000                                 239
             71.459                71.674                                 240
          58 1.154E-02           56 1.850E-01         100                 241
 97.600   99.000   99.000 155.200 155.200                                 242
  0.000   30.500  -30.500 106.700-106.700                                 243
             71.330                71.459                                 244
          59 1.072E-02           56 1.862E-01         100                 245
 97.600   99.000   99.000 155.200 155.200                                 246
  0.000   30.500  -30.500 106.400-106.400                                 247
             71.351                71.330                                 248
  58-1.153E-03-2.088E-03-2.600E-03-2.523E-03-1.737E-03-1.991E-04
 2.037E-03 4.790E-03 7.709E-03 1.023E-02 1.153E-02 1.047E-02 5.634E-03
-4.660E-03-2.203E-02-4.754E-02-8.078E-02-1.189E-01-1.562E-01-1.850E-01
              END OF POLE SHIFT CYCLE.                                    252
```

```
          60 1.550E-02          56 1.804E-01           100              254
  98.500   99.000   99.000 155.200 155.200                              255
   0.000   30.500  -30.500 106.700-106.700                              256
                73.595                71.330                            257
          61 1.154E-02          56 1.850E-01           100              258
  97.600   99.000   99.000 155.200 155.200                              259
   0.000   30.500  -30.500 106.700-106.700                              260
                71.330                73.595                            261
          62 7.558E-03          55 1.896E-01           100              262
  96.700   99.000   99.000 155.200 155.200                              263
   0.000   30.500  -30.500 106.700-106.700                              264
                72.556                71.330                            265
          63 8.888E-03          55 1.881E-01           100              266
  97.000   99.000   99.000 155.200 155.200                              267
   0.000   30.500  -30.500 106.700-106.700                              268
                71.747                72.556                            269
          64 1.021E-02          56 1.865E-01           100              270
  97.300   99.000   99.000 155.200 155.200                              271
   0.000   30.500  -30.500 106.700-106.700                              272
                71.348                71.747                            273
          65 1.154E-02          56 1.850E-01           100              274
  97.600   99.000   99.000 155.200 155.200                              275
   0.000   30.500  -30.500 106.700-106.700                              276
                71.330                71.348                            277
          66 1.287E-02          56 1.835E-01           100              278
  97.900   99.000   99.000 155.200 155.200                              279
   0.000   30.500  -30.500 106.700-106.700                              280
                71.719                71.330                            281
          67 1.243E-02          56 1.840E-01           100              282
  97.800   99.000   99.000 155.200 155.200                              283
   0.000   30.500  -30.500 106.700-106.700                              284
                71.550                71.719                            285
          68 1.199E-02          56 1.845E-01           100              286
  97.700   99.000   99.000 155.200 155.200                              287
   0.000   30.500  -30.500 106.700-106.700                              288
                71.424                71.550                            289
          69 1.154E-02          56 1.850E-01           100              290
  97.600   99.000   99.000 155.200 155.200                              291
   0.000   30.500  -30.500 106.700-106.700                              292
                71.330                71.424                            293
          70 1.110E-02          56 1.855E-01           100              294
  97.500   99.000   99.000 155.200 155.200                              295
   0.000   30.500  -30.500 106.700-106.700                              296
                71.288                71.330                            297
          71 1.066E-02          56 1.860E-01           100              298
  97.400   99.000   99.000 155.200 155.200                              299
   0.000   30.500  -30.500 106.700-106.700                              300
                71.295                71.288                            301
   70-1.206E-03-2.192E-03-2.754E-03-2.724E-03-1.983E-03-4.871E-04
 1.712E-03 4.430E-03 7.319E-03 9.815E-03 1.109E-02 1.001E-02 5.161E-03
-5.146E-03-2.253E-02-4.804E-02-8.128E-02-1.194E-01-1.567E-01-1.855E-01
```

```
       72 1.776E-02            56 1.769E-01          100                    305
 97.500  99.900  99.900 155.200 155.200                                     306
  0.000  30.500 -30.500 106.700-106.700                                     307
             75.717               71.288                                    308
       73 1.110E-02            56 1.855E-01          100                    309
 97.500  99.000  99.000 155.200 155.200                                     310
  0.000  30.500 -30.500 106.700-106.700                                     311
             71.288               75.717                                    312
       74 4.432E-03            55 1.942E-01          100                    313
 97.500  98.100  98.100 155.200 155.200                                     314
  0.000  30.500 -30.500 106.700-106.700                                     315
             75.931               71.288                                    316
       75 6.661E-03            55 1.913E-01          100                    317
 97.500  98.400  98.400 155.200 155.200                                     318
  0.000  30.500 -30.500 106.700-106.700                                     319
             73.214               75.931                                    320
       76 8.881E-03            55 1.884E-01          100                    321
 97.500  98.700  98.700 155.200 155.200                                     322
  0.000  30.500 -30.500 106.700-106.700                                     323
             71.729               73.214                                    324
       77 1.110E-02            56 1.855E-01          100                    325
 97.500  99.000  99.000 155.200 155.200                                     326
  0.000  30.500 -30.500 106.700-106.700                                     327
             71.288               71.729                                    328
       78 1.333E-02            56 1.826E-01          100                    329
 97.500  99.300  99.300 155.200 155.200                                     330
  0.000  30.500 -30.500 106.700-106.700                                     331
             71.837               71.288                                    332
       79 1.259E-02            56 1.836E-01          100                    333
 97.500  99.200  99.200 155.200 155.200                                     334
  0.000  30.500 -30.500 106.700-106.700                                     335
             71.563               71.837                                    336
       80 1.185E-02            56 1.845E-01          100                    337
 97.500  99.100  99.100 155.200 155.200                                     338
  0.000  30.500 -30.500 106.700-106.700                                     339
             71.373               71.563                                    340
       81 1.110E-02            56 1.855E-01          100                    341
 97.500  99.000  99.000 155.200 155.200                                     342
  0.000  30.500 -30.500 106.700-106.700                                     343
             71.288               71.373                                    344
       82 1.036E-02            56 1.865E-01          100                    345
 97.500  98.900  98.900 155.200 155.200                                     346
  0.000  30.500 -30.500 106.700-106.700                                     347
             71.332               71.288                                    348
  81-1.2[illegible]6E-03-2.192E-03-2.754E-03-2.724E-03-1.983E-03-4.871E-04
1.712E-03 4.430E-03 7.319E-03 9.815E-03 1.109E-02 1.001E-02 5.161E-03
-5.146E-03-2.253E-02-4.804E-02-8.128E-02-1.194E-01-1.567E-01-1.855E-01
       83 1.451E-02            56 1.827E-01          100                    352
 97.500  99.000  99.000 155.200 155.200                                     353
  0.000  31.400 -31.400 106.700-106.700                                     354
```

```
              73.239              71.288                             355
           84 1.110E-02        56 1.855E-01       100                356
 97.500   99.000   99.000 155.200 155.200                            357
  0.000   30.500  -30.500 106.700-106.700                            358
              71.288              73.239                             359
           85 7.779E-03        56 1.882E-01       100                360
 97.500   99.000   99.000 155.200 155.200                            361
  0.000   29.600  -29.600 106.700-106.700                            362
              72.327              71.288                             363
           86 8.879E-03        56 1.873E-01       100                364
 97.500   99.000   99.000 155.200 155.200                            365
  0.000   29.900  -29.900 106.700-106.700                            366
              71.671              72.327                             367
           87 9.988E-03        56 1.864E-01       100                368
 97.500   99.000   99.000 155.200 155.200                            369
  0.000   30.200  -30.200 106.700-106.700                            370
              71.327              71.671                             371
           88 1.110E-02        56 1.855E-01       100                372
 97.500   99.000   99.000 155.200 155.200                            373
  0.000   30.500  -30.500 106.700-106.700                            374
              71.288              71.327                             375
           89 1.223E-02        56 1.846E-01       100                376
 97.500   99.000   99.000 155.200 155.200                            377
  0.000   30.800  -30.800 106.700-106.700                            378
              71.599              71.288                             379
           90 1.185E-02        56 1.849E-01       100                380
 97.500   99.000   99.000 155.200 155.200                            381
  0.000   30.700  -30.700 106.700-106.700                            382
              71.457              71.599                             383
           91 1.148E-02        56 1.852E-01       100                384
 97.500   99.000   99.000 155.200 155.200                            385
  0.000   30.600  -30.600 106.700-106.700                            386
              71.348              71.457                             387
           92 1.110E-02        56 1.855E-01       100                388
 97.500   99.000   99.000 155.200 155.200                            389
  0.000   30.500  -30.500 106.700-106.700                            390
              71.288              71.348                             391
           93 1.073E-02        56 1.858E-01       100                392
 97.500   99.000   99.000 155.200 155.200                            393
  0.000   30.400  -30.400 106.700-106.700                            394
              71.266              71.288                             395
           94 1.036E-02        56 1.861E-01       100                396
 97.500   99.000   99.000 155.200 155.200                            397
  0.000   30.300  -30.300 106.700-106.700                            398
              71.285              71.266                             399
  93-1.258E-03-2.295E-03-2.906E-03-2.921E-03-2.221E-03-7.614E-04
 1.406E-03 4.100E-03 6.969E-03 9.451E-03 1.071E-02 9.642E-03 4.784E-03
-5.519E-03-2.289E-02-4.840E-02-8.163E-02-1.197E-01-1.570E-01-1.858E-01
           95 1.191E-02        56 1.833E-01       100                403
 97.500   99.000   99.000 156.100 156.100                            404
```

```
  0.000   30.400 -30.400 106.700-106.700                          405
             71.065                 71.266                        406
         96 1.310E-02         56 1.808E-01     100                407
 97.500   99.000  99.000 157.000 157.000                          408
  0.000   30.400 -30.400 106.700-106.700                          409
             71.055                 71.065                        410
         97 1.429E-02         56 1.782E-01     100                411
 97.500   99.000  99.000 157.900 157.900                          412
  0.000   30.400 -30.400 106.700-106.700                          413
             71.311                 71.055                        414
         98 1.389E-02         56 1.791E-01     100                415
 97.500   99.000  99.000 157.600 157.600                          416
  0.000   30.400 -30.400 106.700-106.700                          417
             71.207                 71.311                        418
         99 1.350E-02         56 1.799E-01     100                419
 97.500   99.000  99.000 157.300 157.300                          420
  0.000   30.400 -30.400 106.700-106.700                          421
             71.130                 71.207                        422
        100 1.310E-02         56 1.808E-01     100                423
 97.500   99.000  99.000 157.000 157.000                          424
  0.000   30.400 -30.400 106.700-106.700                          425
             71.055                 71.130                        426
        101 1.270E-02         56 1.816E-01     100                427
 97.500   99.000  99.000 156.700 156.700                          428
  0.000   30.400 -30.400 106.700-106.700                          429
             71.040                 71.055                        430
        102 1.231E-02         56 1.824E-01     100                431
 97.500   99.000  99.000 156.400 156.400                          432
  0.000   30.400 -30.400 106.700-106.700                          433
             71.037                 71.040                        434
        103 1.191E-02         56 1.833E-01     100                435
 97.500   99.000  99.000 156.100 156.100                          436
  0.000   30.400 -30.400 106.700-106.700                          437
             71.065                 71.037                        438
        104 1.205E-02         56 1.830E-01     100                439
 97.500   99.000  99.000 156.200 156.200                          440
  0.000   30.400 -30.400 106.700-106.700                          441
             71.055                 71.065                        442
        105 1.218E-02         56 1.827E-01     100                443
 97.500   99.000  99.000 156.300 156.300                          444
  0.000   30.400 -30.400 106.700-106.700                          445
             71.046                 71.055                        446
        106 1.231E-02         56 1.824E-01     100                447
 97.500   99.000  99.000 156.400 156.400                          448
  0.000   30.400 -30.400 106.700-106.700                          449
             71.037                 71.046                        450
        107 1.244E-02         56 1.822E-01     100                451
 97.500   99.000  99.000 156.500 156.500                          452
  0.000   30.400 -30.400 106.700-106.700                          453
             71.038                 71.037                        454
```

```
  106-1.136E-03-2.050E-03-2.537E-03-2.424E-03-1.592E-03 4.900E-06
 2.315E-03 5.136E-03 8.162E-03 1.082E-02 1.226E-02 1.136E-02 6.693E-03
-3.417E-03-2.059E-02-4.509E-02-7.891E-02-1.168E-01-1.539E-01-1.824E-01
        108 1.475E-02              56 1.788E-01         100                 458
  97.500   99.000   99.000 156.400 156.400                                  459
   0.000   30.400 -30.400 107.600-107.600                                   460
                 71.957                71.037                               461
        109 1.231E-02              56 1.824E-01         100                 462
  97.500   99.000   99.000 156.400 156.400                                  463
   0.000   30.400 -30.400 106.700-106.700                                   464
                 71.037                71.957                               465
        110 9.868E-03              56 1.861E-01         100                 466
  97.500   99.000   99.000 156.400 156.400                                  467
   0.000   30.400 -30.400 105.800-105.800                                   468
                 71.187                71.037                               469
        111 1.068E-02              56 1.849E-01         100                 470
  97.500   99.000   99.000 156.400 156.400                                  471
   0.000   30.400 -30.400 106.100-106.100                                   472
                 71.012                71.187                               473
        112 1.149E-02              56 1.836E-01         100                 474
  97.500   99.000   99.000 156.400 156.400                                  475
   0.000   30.400 -30.400 106.400-106.400                                   476
                 70.960                71.012                               477
        113 1.231E-02              56 1.824E-01         100                 478
  97.500   99.000   99.000 156.400 156.400                                  479
   0.000   30.400 -30.400 106.700-106.700                                   480
                 71.037                70.960                               481
        114 1.204E-02              56 1.828E-01         100                 482
  97.500   99.000   99.000 156.400 156.400                                  483
   0.000   30.400 -30.400 106.600-106.600                                   484
                 71.008                71.037                               485
        115 1.177E-02              56 1.832E-01         100                 486
  97.500   99.000   99.000 156.400 156.400                                  487
   0.000   30.400 -30.400 106.500-106.500                                   488
                 70.979                71.008                               489
        116 1.149E-02              56 1.836E-01         100                 490
  97.500   99.000   99.000 156.400 156.400                                  491
   0.000   30.400 -30.400 106.400-106.400                                   492
                 70.960                70.979                               493
        117 1.122E-02              56 1.841E-01         100                 494
  97.500   99.000   99.000 156.400 156.400                                  495
   0.000   30.400 -30.400 106.300-106.300                                   496
                 70.956                70.960                               497
        118 1.095E-02              56 1.845E-01         100                 498
  97.500   99.000   99.000 156.400 156.400                                  499
   0.000   30.400 -30.400 106.200-106.200                                   500
                 70.970                70.956                               501
  117-1.244E-03-2.256E-03-2.847E-03-2.836E-03-2.105E-03-6.071E-04
 1.606E-03 4.554E-03 7.287E-03 9.842E-03 1.119E-02 1.021E-02 5.465E-03
-4.716E-03-2.196E-02-4.732E-02-8.040E-02-1.183E-01-1.555E-01-1.841E-01

                 END OF POLE SHIFT CYCLE.
```

```
                PROGRAM RESTARTED WITH LAST POLE POSITIONS FROM ABOVE.

             1 2.579E-02          58 1.584E-01          100                   512
97.500  99.000  99.000 156.400 156.400                                          513
 0.000  30.400 -30.400 106.200-106.200                                          514
              85.536                   70.956                                   515
             2 2.444E-02          58 1.600E-01          100                   516
97.200  99.000  99.000 156.400 156.400                                          517
 0.000  30.400 -30.400 106.200-106.200                                          518
              82.301                   85.536                                   519
             3 2.308E-02          58 1.615E-01          100                   520
96.900  99.000  99.000 156.400 156.400                                          521
 0.000  30.400 -30.400 106.200-106.200                                          522
              79.458                   82.301                                   523
             4 2.171E-02          58 1.631E-01          100                   524
96.600  99.000  99.000 156.400 156.400                                          525
 0.000  30.400 -30.400 106.200-106.200                                          526
              76.918                   79.458                                   527
             5 2.033E-02          58 1.646E-01          100                   528
96.300  99.000  99.000 156.400 156.400                                          529
 0.000  30.400 -30.400 106.200-106.200                                          530
              74.788                   76.918                                   531
             6 1.895E-02          58 1.662E-01          100                   532
96.000  99.000  99.000 156.400 156.400                                          533
 0.000  30.400 -30.400 106.200-106.200                                          534
              72.964                   74.788                                   535
             7 1.757E-02          58 1.677E-01          100                   536
95.700  99.000  99.000 156.400 156.400                                          537
 0.000  30.400 -30.400 106.200-106.200                                          538
              71.523                   72.964                                   539
             8 1.618E-02          57 1.693E-01          100                   540
95.400  99.000  99.000 156.400 156.400                                          541
 0.000  30.400 -30.400 106.200-106.200                                          542
              70.397                   71.523                                   543
             9 1.479E-02          57 1.709E-01          100                   544
95.100  99.000  99.000 156.400 156.400                                          545
 0.000  30.400 -30.400 105.200-106.200                                          546
              69.673                   70.397                                   547
            10 1.340E-02          57 1.724E-01          100                   548
94.800  99.000  99.000 156.400 156.400                                          549
 0.000  30.400 -30.400 106.200-106.200                                          550
              69.277                   69.673                                   551
            11 1.200E-02          57 1.740E-01          100                   552
94.500  99.000  99.000 156.400 156.400                                          553
 0.000  30.400 -30.400 106.200-106.200                                          554
              69.286                   69.277                                   555
            12 1.247E-02          57 1.735E-01          100                   556
94.600  99.000  99.000 156.400 156.400                                          557
 0.000  30.400 -30.400 106.200-106.200                                          558
              69.256                   69.286                                   559
```

```
        13 1.293E-02           57 1.730E-01        100                     560
   94.700   99.000   99.000 156.400 156.400                                561
    0.000   30.400  -30.400 106.200-106.200                                562
              69.250                 69.256                                563
        14 1.340E-02           57 1.724E-01        100                     564
   94.800   99.000   99.000 156.400 156.400                                565
    0.000   30.400  -30.400 106.200-106.200                                566
              69.277                 69.250                                567
     13-1.476E-03-2.705E-03-3.459E-03-3.544E-03-2.824E-03-1.237E-03
  1.173E-03 4.231E-03 7.590E-03 1.068E-02 1.268E-02 1.246E-02 8.562E-03
 -6.819E-04-1.691E-02-4.118E-02-7.310E-02-1.098E-01-1.457E-01-1.730E-01
        15 1.519E-02           57 1.701E-01        100                     571
   94.700   99.300   99.300 156.400 156.400                                572
    0.000   30.400  -30.400 106.200-106.200                                573
              69.806                 69.250                                574
        16 1.293E-02           57 1.730E-01        100                     575
   94.700   99.000   99.000 156.400 156.400                                576
    0.000   30.400  -30.400 106.200-106.200                                577
              69.250                 69.806                                578
        17 1.067E-02           57 1.759E-01        100                     579
   94.700   98.700   98.700 156.400 156.400                                580
    0.000   30.400  -30.400 106.200-106.200                                581
              69.573                 69.250                                582
        18 1.142E-02           57 1.749E-01        100                     583
   94.700   98.800   98.800 156.400 156.400                                584
    0.000   30.400  -30.400 106.200-106.200                                585
              69.345                 69.573                                586
        19 1.218E-02           57 1.739E-01        100                     587
   94.700   98.900   98.900 156.400 156.400                                588
    0.000   30.400  -30.400 106.200-106.200                                589
              69.260                 69.345                                590
        20 1.293E-02           57 1.730E-01        100                     591
   94.700   99.000   99.000 156.400 156.400                                592
    0.000   30.400  -30.400 106.200-106.200                                593
              69.250                 69.260                                594
        21 1.369E-02           57 1.720E-01        100                     595
   94.700   99.100   99.100 156.400 156.400                                596
    0.000   30.400  -30.400 106.200-106.200                                597
              69.327                 69.250                                598
     20-1.476E-03-2.705E-03-3.459E-03-3.544E-03-2.824E-03-1.237E-03
  1.173E-03 4.231E-03 7.590E-03 1.068E-02 1.268E-02 1.246E-02 8.562E-03
 -6.819E-04-1.691E-02-4.118E-02-7.310E-02-1.098E-01-1.457E-01-1.730E-01
        22 1.406E-02           57 1.721E-01        100                     602
   94.700   99.000   99.000 156.400 156.400                                603
    0.000   30.700  -30.700 106.200-106.200                                604
              69.485                 69.250                                605
        23 1.293E-02           57 1.730E-01        100                     606
   94.700   99.000   99.000 156.400 156.400                                607
    0.000   30.400  -30.400 106.200-106.200                                608
              69.250                 69.485                                609
```

```
         24 1.162E-02           57 1.739E-01        100                 610
  94.700   99.000   99.000 156.400 156.400                              611
   0.000   30.100  -30.100 106.200-106.200                              612
             69.291                 69.250                              613
         25 1.219E-02           57 1.736E-01        100                 614
  94.700   99.000   99.000 156.400 156.400                              615
   0.000   30.200  -30.200 106.200-106.200                              616
             69.245                 69.291                              617
         26 1.256E-02           57 1.733E-01        100                 618
  94.700   99.000   99.000 156.400 156.400                              619
   0.000   30.300  -30.300 106.200-106.200                              620
             69.238                 69.245                              621
         27 1.293E-02           57 1.730E-01        100                 622
  94.700   99.000   99.000 156.400 156.400                              623
   0.000   30.400  -30.400 106.200-106.200                              624
             69.250                 69.238                              625
    26-1.528E-03-2.898E-03-3.611E-03-3.741E-03-3.061E-03-1.510E-03
 8.689E-04 3.962E-03 7.241E-03 1.032E-02 1.231E-02 1.208E-02 8.187E-0
-1.054E-03-1.727E-02-4.153E-02-7.344E-02-1.101E-01-1.460E-01-1.733E-0
         28 1.297E-02           57 1.724E-01        100                 629
  94.700   99.000   99.000 156.700 156.700                              630
   0.000   30.300  -30.300 106.200-106.200                              631
             69.162                 69.238                              632
         29 1.338E-02           57 1.716E-01        100                 633
  94.700   99.000   99.000 157.000 157.000                              634
   0.000   30.300  -30.300 106.200-106.200                              635
             69.113                 69.162                              636
         30 1.379E-02           57 1.707E-01        100                 637
  94.700   99.000   99.000 157.300 157.300                              638
   0.000   30.300  -30.300 106.200-106.200                              639
             69.107                 69.113                              640
         31 1.420E-02           58 1.699E-01        100                 641
  94.700   99.000   99.000 157.600 157.600                              642
   0.000   30.300  -30.300 106.200-106.200                              643
             69.130                 69.107                              644
         32 1.406E-02           57 1.702E-01        100                 645
  94.700   99.000   99.000 157.500 157.500                              646
   0.000   30.300  -30.300 106.200-106.200                              647
             69.121                 69.130                              648
         33 1.393E-02           57 1.705E-01        100                 649
  94.700   99.000   99.000 157.400 157.400                              650
   0.000   30.300  -30.300 106.200-106.200                              651
             69.112                 69.121                              652
         34 1.379E-02           57 1.707E-01        100                 653
  94.700   99.000   99.000 157.300 157.300                              654
   0.000   30.300  -30.300 106.200-106.200                              655
             69.107                 69.112                              656
         35 1.365E-02           57 1.710E-01        100                 657
  94.700   99.000   99.000 157.200 157.200                              658
   0.000   30.300  -30.300 106.200-106.200                              659
```

```
                  69.109                   69.107                                 660
       34-1.435E-03-2.621E-03-3.328E-03-3.360E-03-2.580E-03-9.256E-04
     1.562E-03 4.708E-03 8.165E-03 1.137E-02 1.349E-02 1.339E-02 9.635E-
    5.382E-04-1.553E-02-3.964E-02-7.139E-02-1.079E-01-1.436E-01-1.707E-
              36 1.461E-02             58 1.695E-01          100              664
      94.700   99.000   99.000 157.300 157.300                                665
       0.000   30.300  -30.300 106.500-106.500                                666
                  69.270                   69.107                             667
              37 1.379E-02             57 1.707E-01          100              668
      94.700   99.000   99.000 157.300 157.300                                669
       0.000   30.300  -30.300 106.200-106.200                                670
                  69.107                   69.270                             671
              38 1.297E-02             57 1.719E-01          100              672
      94.700   99.000   99.000 157.300 157.300                                673
       0.000   30.300  -30.300 105.900-105.900                                674
                  69.054                   69.107                             675
              39 1.215E-02             57 1.731E-01          100              676
      94.700   99.000   99.000 157.300 157.300                                677
       0.000   30.300  -30.300 105.600-105.600                                678
                  69.119                   69.054                             679
              40 1.242E-02             57 1.727E-01          100              680
      94.700   99.000   99.000 157.300 157.300                                681
       0.000   30.300  -30.300 105.700-105.700                                682
                  69.095                   69.119                             683
              41 1.270E-02             57 1.723E-01          100              684
      94.700   99.000   99.000 157.300 157.300                                685
       0.000   30.300  -30.300 105.800-105.800                                686
                  69.074                   69.095                             687
              42 1.297E-02             57 1.719E-01          100              688
      94.700   99.000   99.000 157.300 157.300                                689
       0.000   30.300  -30.300 105.900-105.900                                700
                  69.054                   69.074                             701
              43 1.324E-02             57 1.715E-01          100              702
      94.700   99.000   99.000 157.300 157.300                                703
       0.000   30.300  -30.300 106.000-106.000                                704
                  69.055                   69.054                             705
       42-1.512E-03-2.775E-03-3.559E-03-3.667E-03-2.961E-03-1.380E-03
     1.035E-03 4.111E-03 7.500E-03 1.063E-02 1.269E-02 1.254E-02 8.723E-0
    -4.271E-04-1.654E-02-4.070E-02-7.249E-02-1.091E-01-1.448E-01-1.719E-0

                THIRD POLE SHIFT CYCLE COMPLETE.

              44 1.344E-02             57 1.714E-01          100              712
      94.800   99.000   99.000 157.300 157.300                                713
       0.000   30.300  -30.300 105.900-105.900                                714
                  69.083                   69.054                             715
              45 1.297E-02             57 1.719E-01          100              716
      94.700   99.000   99.000 157.300 157.300                                717
       0.000   30.300  -30.300 105.900-105.900                                718
                  69.054                   69.083                             719
```

```
        46 1.250E-02           57 1.725E-01        100                 720
  94.800   99.000   99.000 157.300 157.300                             721
   0.050   30.300  -30.300 105.900-105.900                             722
                69.077             69.054                              723
     45-1.512E-03-2.775E-03-3.559E-03-3.667E-03-2.961E-03-1.380E-03
  1.035E-03 4.111E-03 7.500E-03 1.063E-02 1.269E-02 1.254E-02 8.723E-03
-4.271E-04-1.654E-02-4.070E-02-7.249E-02-1.091E-01-1.448E-01-1.719E-01
        47 1.372E-02           57 1.710E-01        100                 727
  94.700   99.100   99.100 157.300 157.300                             728
   0.000   30.300  -30.300 105.900-105.900                             729
                69.131             69.054                              730
        48 1.297E-02           57 1.719E-01        100                 731
  94.700   99.000   99.000 157.300 157.300                             732
   0.000   30.300  -30.300 105.900-105.900                             733
                69.054             69.131                              734
        49 1.221E-02           57 1.729E-01        100                 735
  94.700   98.900   98.900 157.300 157.300                             736
   0.000   30.300  -30.300 105.900-105.900                             737
                69.083             69.054                              738
     48-1.512E-03-2.775E-03-3.559E-03-3.667E-03-2.961E-03-1.380E-03
  1.035E-03 4.111E-03 7.500E-03 1.063E-02 1.269E-02 1.254E-02 8.723E-03
-4.271E-04-1.654E-02-4.070E-02-7.249E-02-1.091E-01-1.448E-01-1.719E-01
        50 1.354E-02           57 1.716E-01        100                 742
  94.700   99.000   99.000 157.300 157.300                             743
   0.000   30.400  -30.400 105.900-105.900                             744
                69.059             69.054                              745
        51 1.297E-02           57 1.719E-01        100                 746
  94.700   99.000   99.000 157.300 157.300                             747
   0.000   30.300  -30.300 105.900-105.900                             748
                69.054             69.089                              749
        52 1.260E-02           57 1.723E-01        100                 750
  94.700   99.000   99.000 157.300 157.300                             751
   0.000   30.200  -30.200 105.900-105.900                             752
                69.060             69.054                              753
     51-1.512E-03-2.775E-03-3.559E-03-3.667E-03-2.961E-03-1.380E-03
  1.035E-03 4.111E-03 7.500E-03 1.063E-02 1.269E-02 1.254E-02 8.723E-03
-4.271E-04-1.654E-02-4.070E-02-7.249E-02-1.091E-01-1.448E-01-1.719E-01
        53 1.311E-02           57 1.717E-01        100                 757
  94.700   99.000   99.000 157.400 157.400                             758
   0.000   30.300  -30.300 105.900-105.900                             759
                69.034             69.054                              760
        54 1.324E-02           57 1.714E-01        100                 761
  94.700   99.000   99.000 157.500 157.500                             762
   0.000   30.300  -30.300 105.900-105.900                             763
                69.018             69.034                              764
        55 1.338E-02           57 1.711E-01        100                 765
  94.700   99.000   99.000 157.600 157.600                             766
   0.000   30.300  -30.300 105.900-105.900                             767
                69.010             69.018                              768
        56 1.352E-02           57 1.708E-01        100                 769
```

```
  94.700  99.000  99.000 157.700 157.700                                  770
   0.000  30.300 -30.300 105.900-105.900                                  771
                  69.008                  69.010                          772
              57 1.366E-02            57 1.705E-01          100           773
  94.700  99.000  99.000 157.800 157.800                                  774
   0.000  30.300 -30.300 105.900-105.900                                  775
                  69.006                  69.008                          776
              58 1.379E-02            57 1.702E-01          100           777
  94.700  99.000  99.000 157.900 157.900                                  778
   0.000  30.300 -30.300 105.900-105.900                                  790
                  69.004                  69.006                          791
              59 1.393E-02            58 1.700E-01          100           792
  94.700  99.000  99.000 158.000 158.000                                  793
   0.000  30.300 -30.300 105.900-105.900                                  794
                  69.003                  69.004                          795
              60 1.407E-02            58 1.697E-01          100           796
  94.700  99.000  99.000 158.100 158.100                                  797
   0.000  30.300 -30.300 105.900-105.900                                  798
                  69.010                  69.003                          799
    59-1.438E-03-2.626E-03-3.336E-03-3.367E-03-2.585E-03-9.200E-04
 1.580E-03 4.744E-03 8.225E-03 1.146E-02 1.361E-02 1.356E-02 9.857E-0
8.184E-04-1.518E-02-3.922E-02-7.089E-02-1.073E-01-1.430E-01-1.700E-0
              61 1.411E-02            58 1.696E-01          100           803
  94.700  99.000  99.000 158.000 158.000                                  804
   0.000  30.300 -30.300 106.000-106.000                                  805
                  69.056                  69.003                          806
              62 1.393E-02            58 1.700E-01          100           807
  94.700  99.000  99.000 158.000 158.000                                  808
   0.000  30.300 -30.300 105.900-105.900                                  809
                  69.003                  69.056                          810
              63 1.366E-02            57 1.704E-01          100           811
  94.700  99.000  99.000 158.000 158.000                                  812
   0.000  30.300 -30.300 105.800-105.800                                  813
                  68.973                  69.003                          814
              64 1.339E-02            57 1.708E-01          100           815
  94.700  99.000  99.000 158.000 158.000                                  816
   0.000  30.300 -30.300 105.700-105.700                                  817
                  68.942                  68.973                          818
              65 1.312E-02            57 1.712E-01          100           819
  94.700  99.000  99.000 158.000 158.000                                  820
   0.000  30.300 -30.300 105.600-105.600                                  821
                  68.924                  68.942                          822
              66 1.285E-02            57 1.716E-01          100           823
  94.700  99.000  99.000 158.000 158.000                                  824
   0.000  30.300 -30.300 105.500-105.500                                  825
                  68.945                  68.924                          826
   65-1.515E-03-2.781E-03-3.565E-03-3.672E-03-2.961E-03-1.371E-03         827
 1.057E-03 4:152E-03 7.565E-03 1.073E-02 1.283E-02 1.271E-02 8.952E-03    828
-1.391E-04-1.619E-02-4.027E-02-7.199E-02-1.085E-01-1.441E-01-1.712E-01    829
-69.830110E-o3                                                            830
```

NOTE: The last four cards from the output data were accidentally lost. The above data was copied from an earlier printout of the same data.

THREE POLE PURE RIMO FILTER

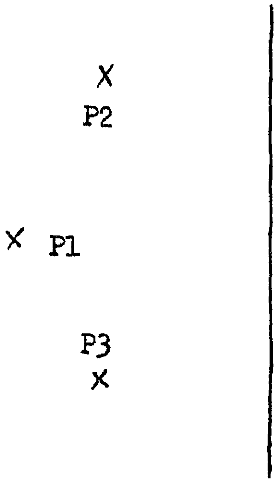

normalized pole
locations

P1	99.900	+	j0.000
P2	75.000	+	j75.000
P3	75.000		-j75.000

COMPUTER PROGRAM INPUT, CONTROL VARIABLES

NF	0
NV	3
I	0
NI	0
MOOD	0
DELL	2.7
COW	0
MOO	0.
FB	110.
CONST	1.0

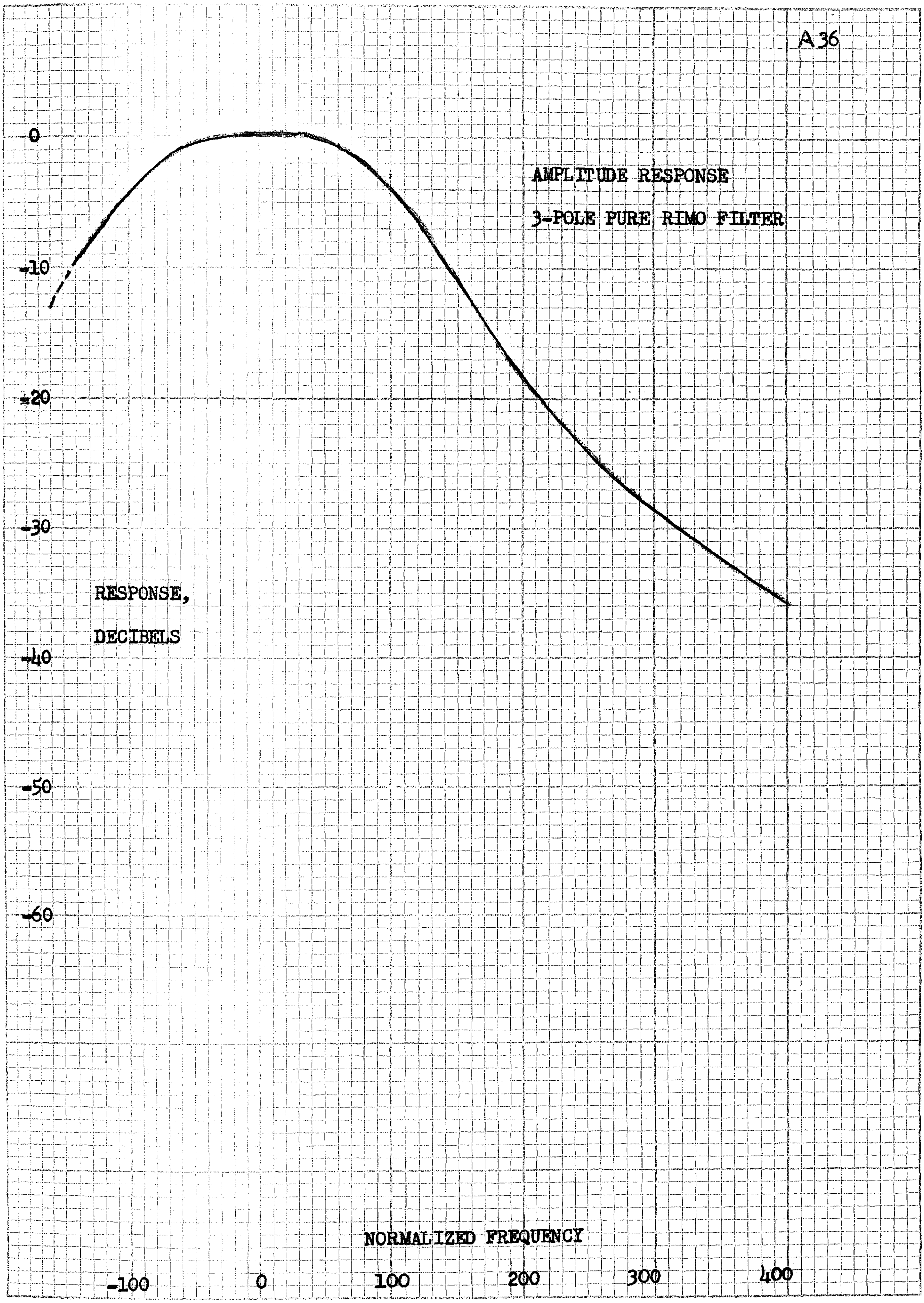

AMPLITUDE RESPONSE

3-POLE PURE RIMO FILTER

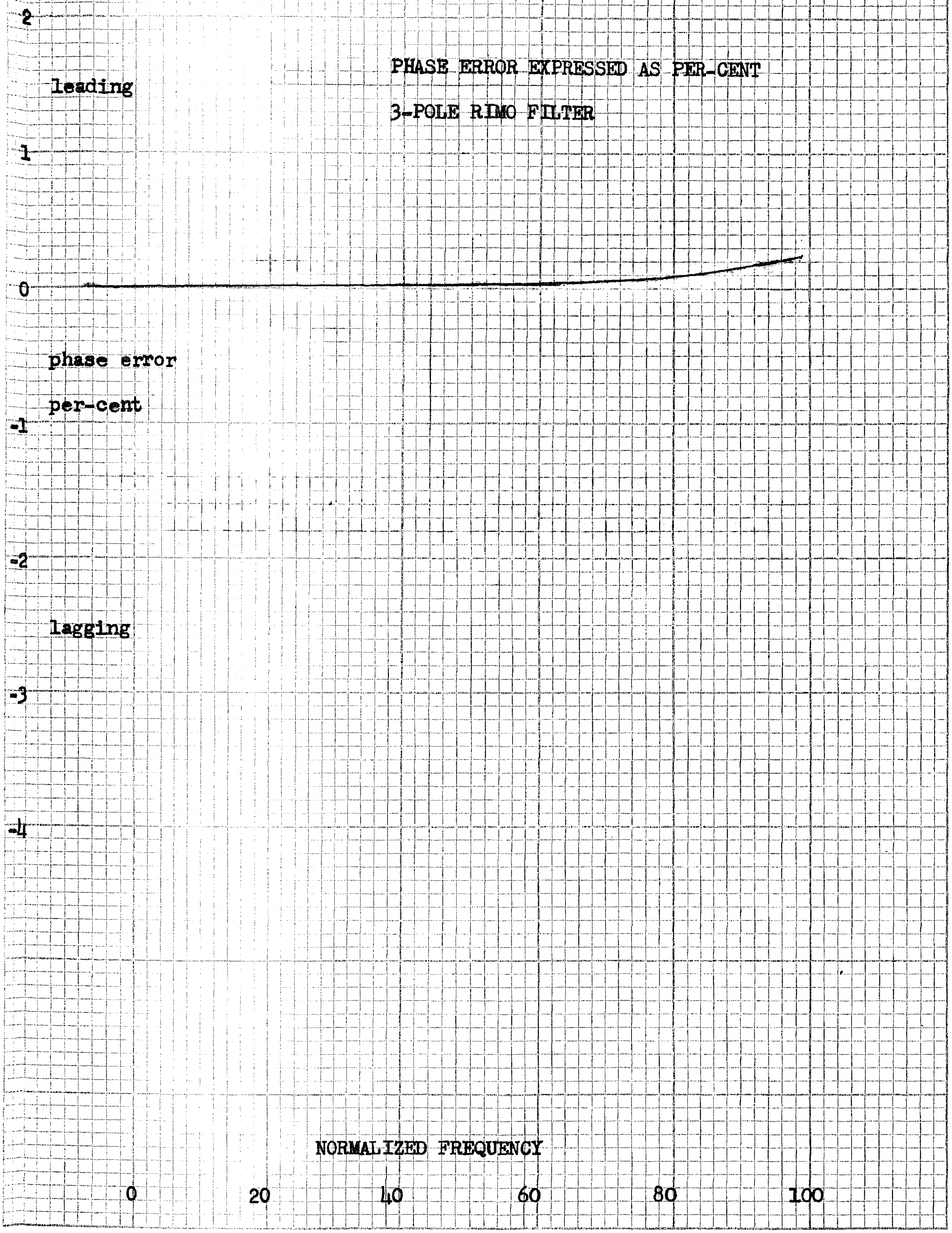

PHASE ERROR EXPRESSED AS PER-CENT

3-POLE RIMO FILTER

THREE POLE BESSEL FILTER

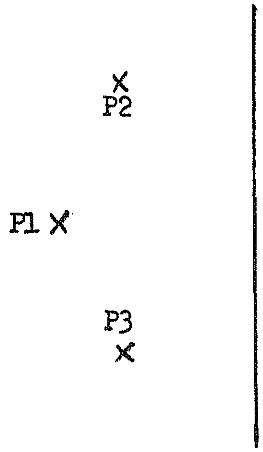

normalized pole locations		
P1	100.000	+ j0.000
P2	79.100	+ j75.500
P3	79.100	-j75.500

NOTE: The pole locations for this filter were fed into the computer as initial data for locating the poles of a three pole pure Rimo filter (the filter of appendix, p. 35.)

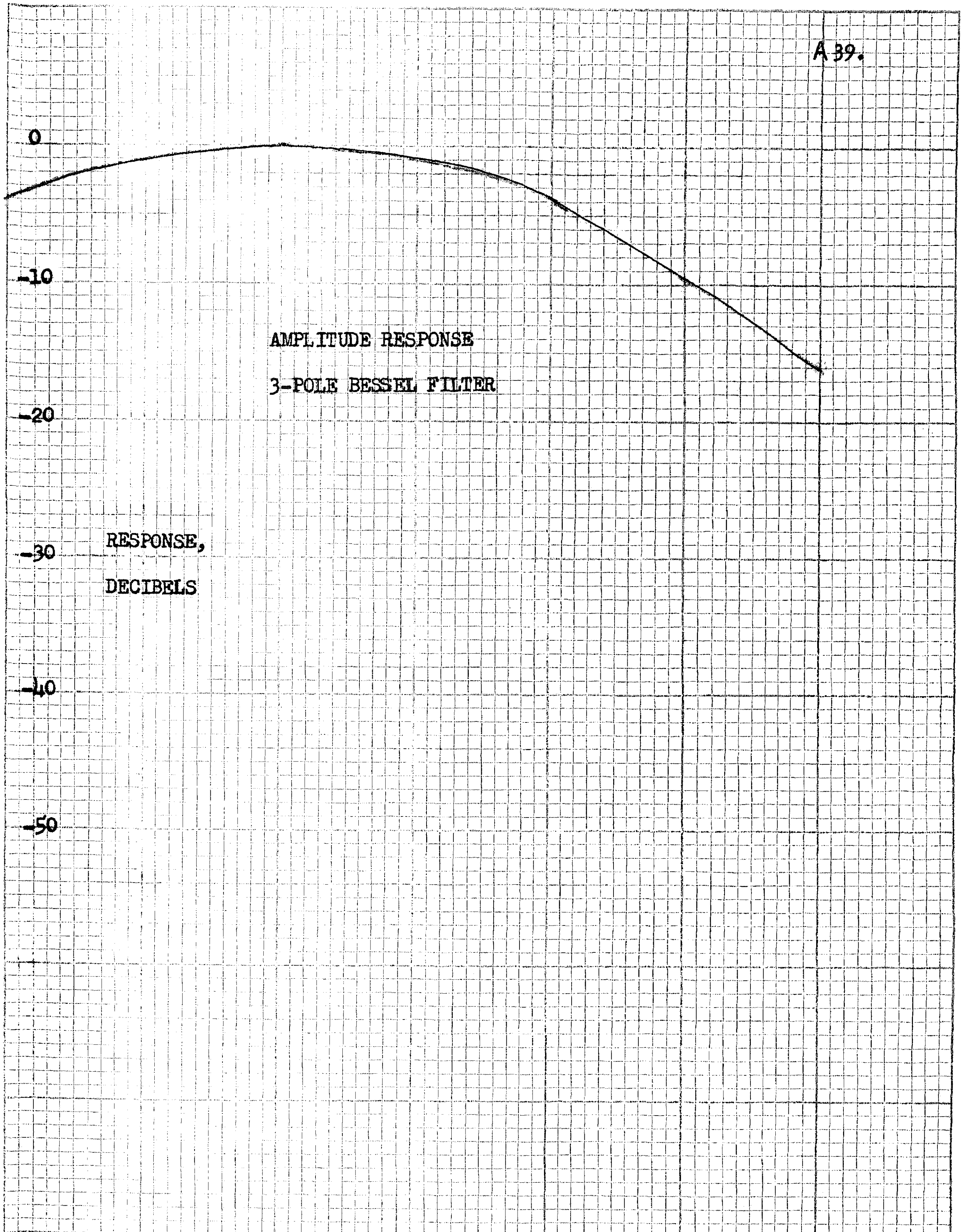

AMPLITUDE RESPONSE

3-POLE BESSEL FILTER

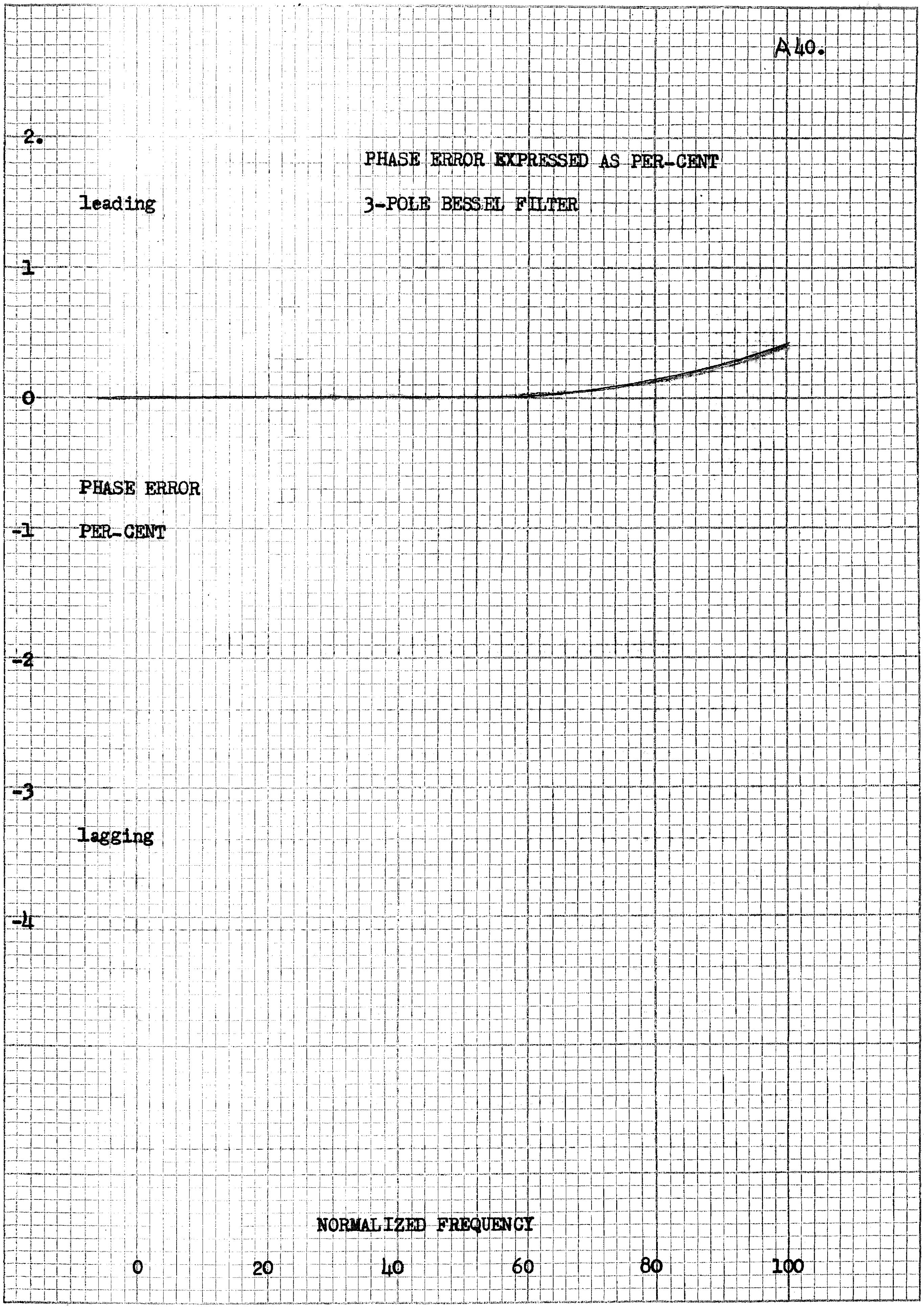

PHASE ERROR EXPRESSED AS PER-CENT

3-POLE BESSEL FILTER

NINE POLE HYBRID RIMO FILTER

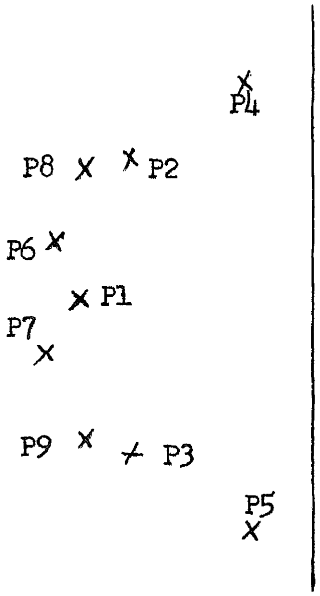

normalized pole locations

P1	100.000	+ j0.000
P2	80.902	+ j58.779
P3	80.902	-j58.779
P4	30.902	+ j95.106
P5	30.902	-j95.106
P6	107.900	+ j20.400
P7	107.900	-j20.400
P8	102.300	+ j55.000
P9	102.300,	-j55.000

INITIAL VALUES FOR PROGRAM CONTROL VARIABLES

NF	5
NV	4
I	0
NI	1
MOOD	1
DELL	2.7
COW	-2.
MOO	0.
FB	110.
CONST	1.0

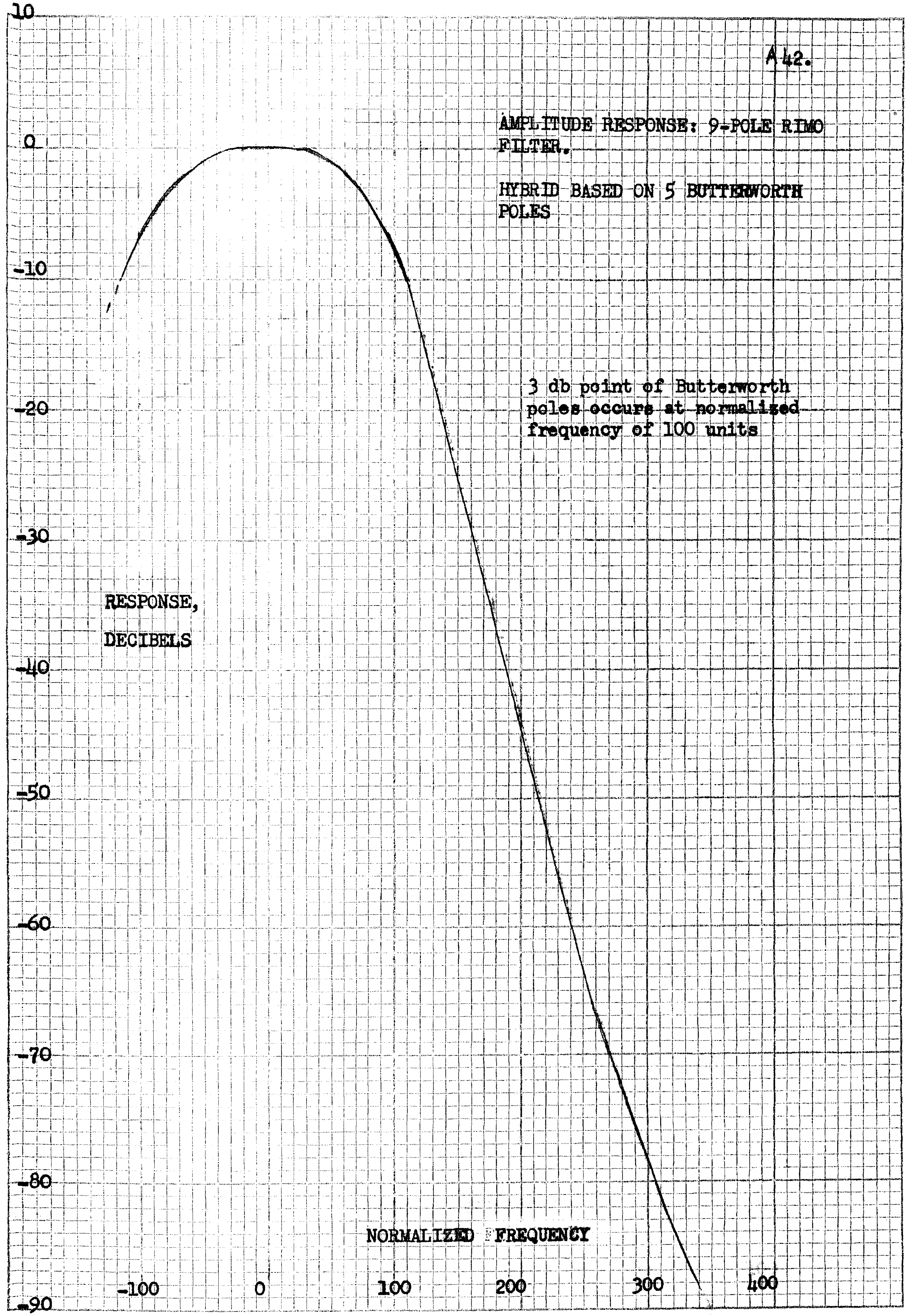

AMPLITUDE RESPONSE: 9-POLE RIMO FILTER.

HYBRID BASED ON 5 BUTTERWORTH POLES

3 db point of Butterworth poles occurs at normalized frequency of 100 units

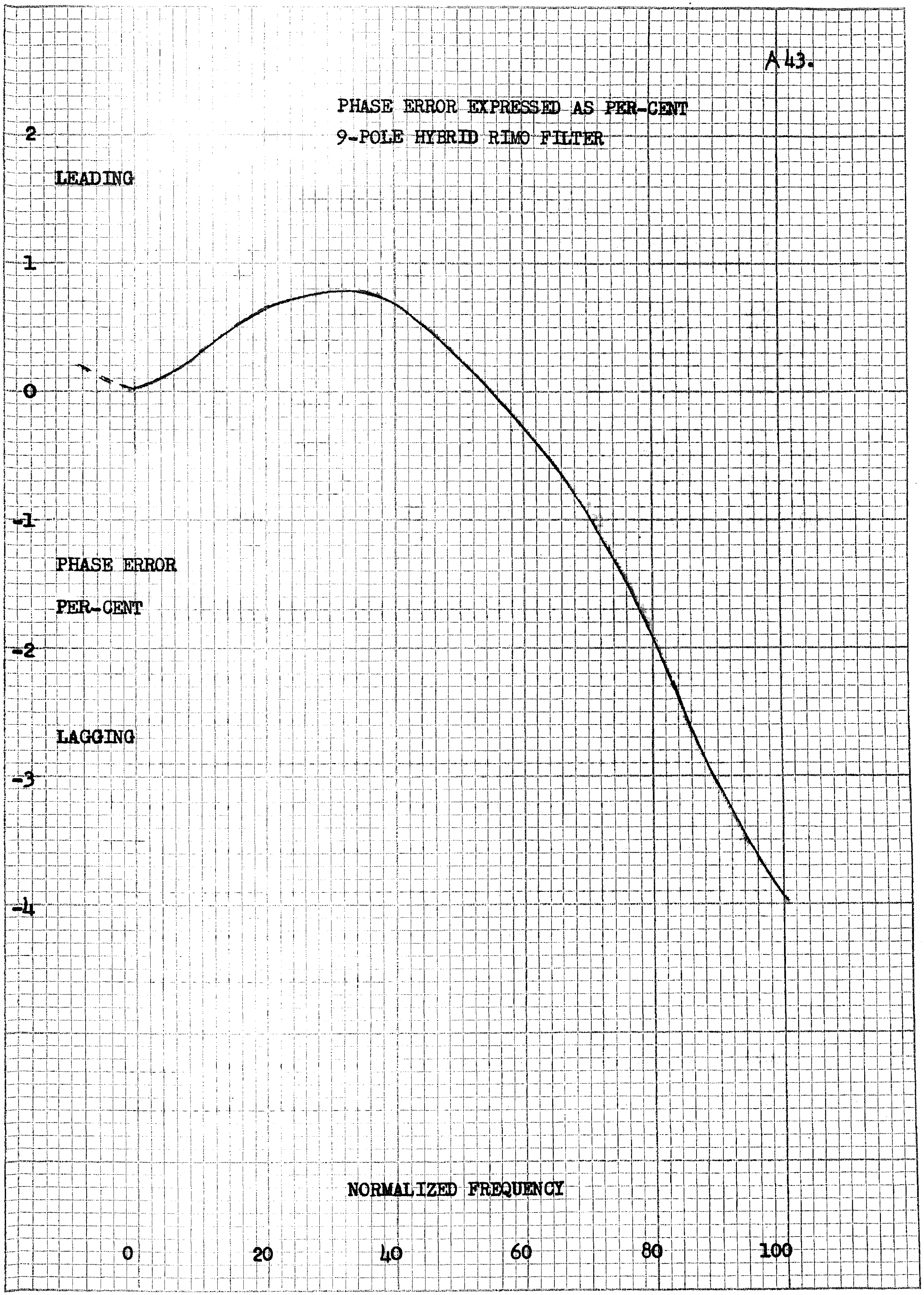

PHASE ERROR EXPRESSED AS PER-CENT

9-POLE HYBRID RIMO FILTER

TEN POLE HYBRID RIMO FILTER

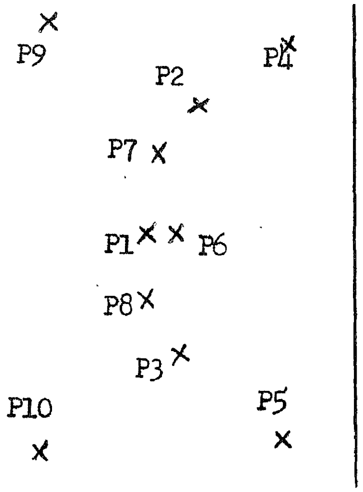

normalized pole locations

P1	100.000	j0.000
P2	80.902	j58.779
P3	80.902	-j58.779
P4	30.902	j95.106
P5	30.902	-j95.106
P6	94.700	j0.000
P7	99.000	j30.300
P8	99.000	-j30.300
P9	158.000	j105.500
P10	158.000	-j105.500

INITIAL VALUES FOR PROGRAM CONTROL VARIABLES

NF	5
NV	5
I	0
NI	0
MOOD	0
DELL	2.7
COW	0.
MOO	0

FB	110.
CONST	1.0

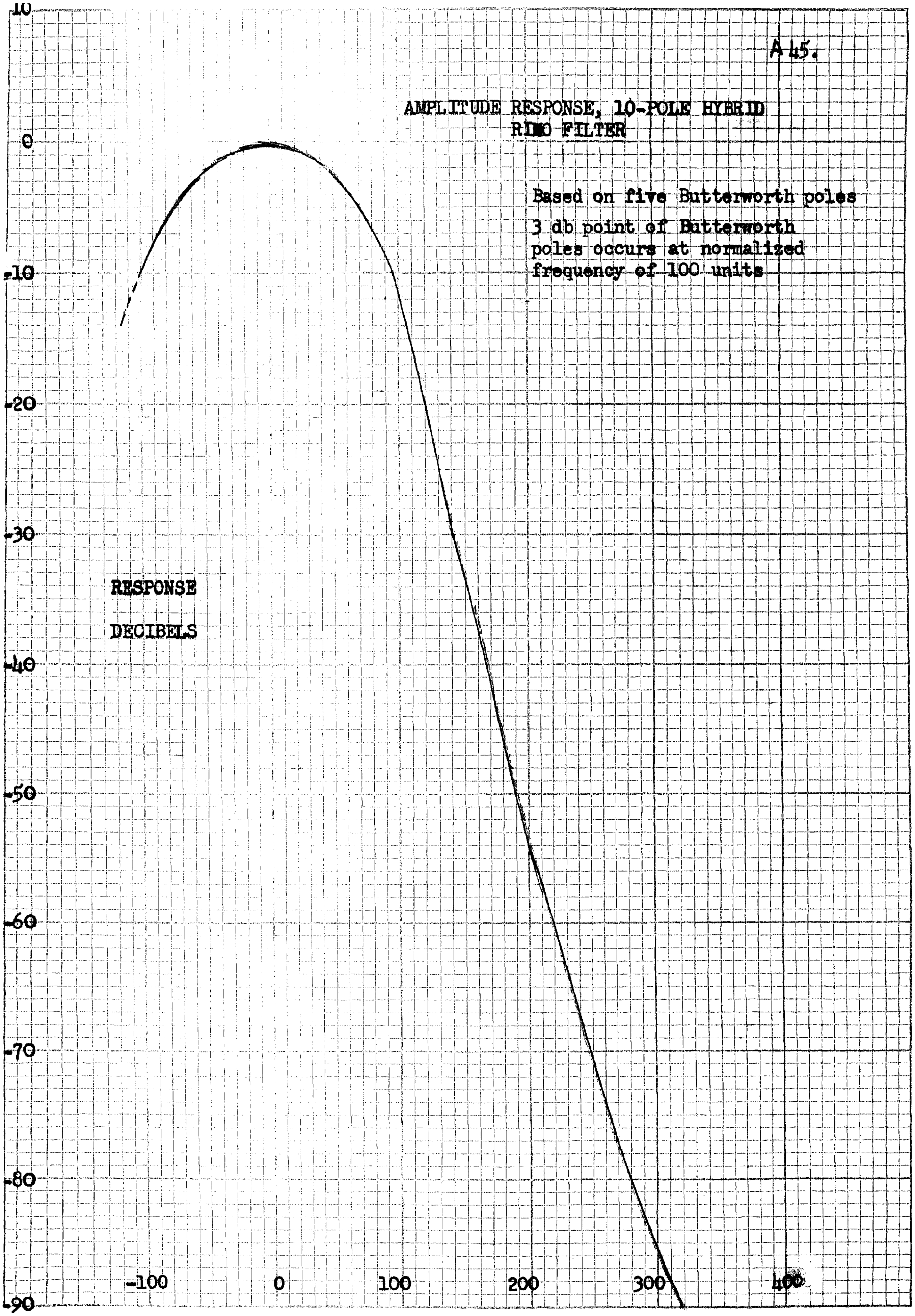

AMPLITUDE RESPONSE, 10-POLE HYBRID
RIMO FILTER

Based on five Butterworth poles

3 db point of Butterworth poles occurs at normalized frequency of 100 units

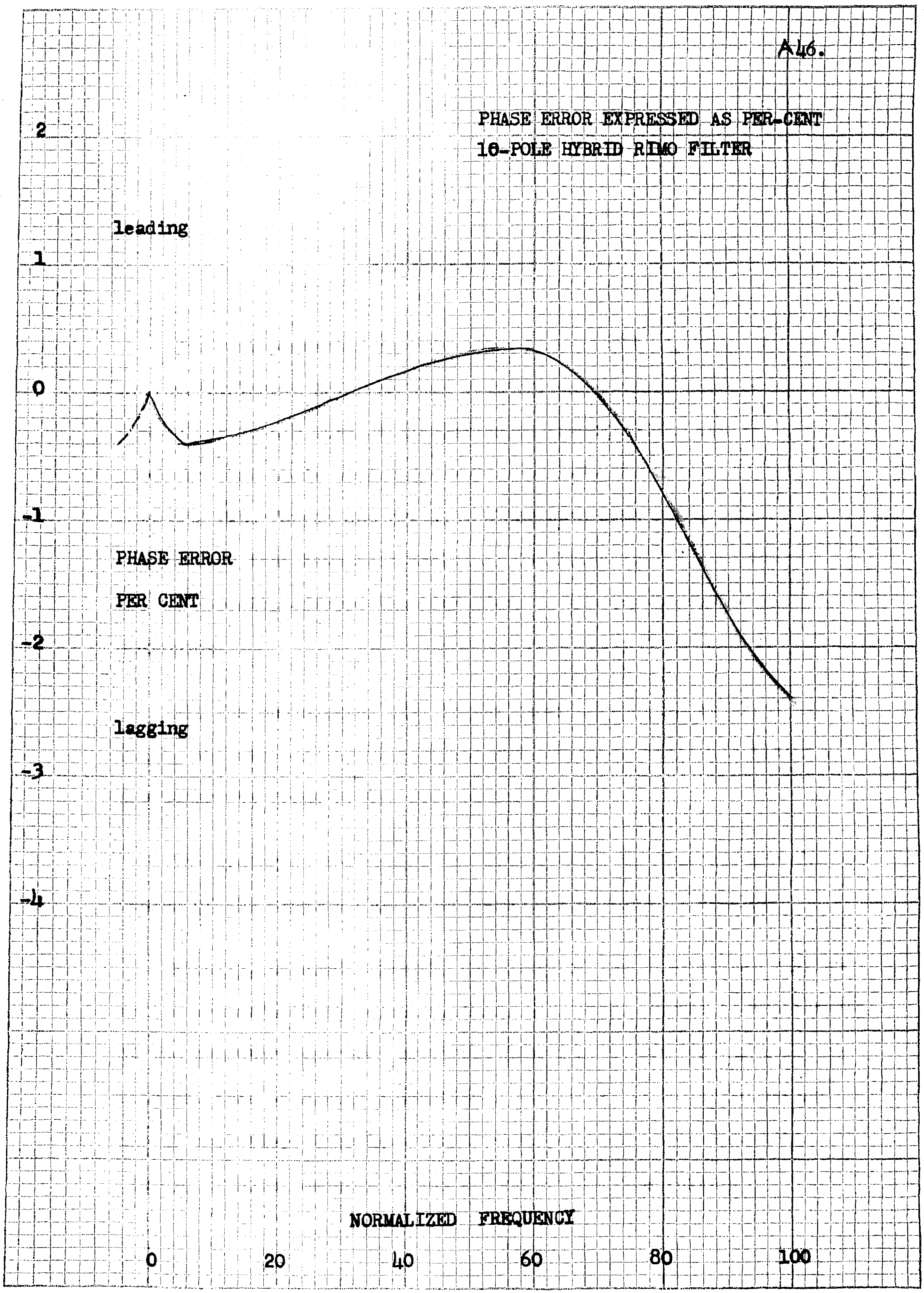

PHASE ERROR EXPRESSED AS PER-CENT
10-POLE HYBRID RIMO FILTER

ACKNOWLEDGEMENTS

The work presented in this paper is not entirely that of this writer. Invaluable help has come from various persons associated with the author in his work at BlonderTongue Laboratories, and it must needs be that their assistance and cooperation be here recorded. From Mr. B.H. Tongue and Mr. J.B. Glaab have come ideas and suggestions that have been useful in realizing the IF amplifier. Mr. I. Horowitz offered the 6BA7 mixer as a means to reduce spurious responses.

All the photographs used in the paper were taken by Mr. J.B. Glaab, who also did the developing and printing. The schematic of the tuner was drawn by Mr. C.J. Majko.

The typing of the copies was done by Mrs. C. Brienza, and the copies of the program flow chart were done by Miss L. Kruglow.

Finally, co-credit for the discovery of the Rimo filter must go to the writer's thesis advisor, Prof. R.H. Rose. It was he who thought of the computer-generated universal Rimo filter, amplifying upon the original idea of merely generating a single set of poles to design one IF amplifier; this investigator being just another in a long history of human endevor to see a tree but not the forest.