New Jersey Institute of Technology
Digital Commons @ NJIT

Theses | Electronic Theses and Dissertations

Spring 5-31-1991

Design for manufacturability : re-design of pencil sharpener for the ease of assembly

Amit R. Rathod
New Jersey Institute of Technology

Follow this and additional works at: https://digitalcommons.njit.edu/theses

Part of the Manufacturing Commons

Recommended Citation

Rathod, Amit R., "Design for manufacturability : re-design of pencil sharpener for the ease of assembly" (1991). *Theses*. 1317.
https://digitalcommons.njit.edu/theses/1317

This Thesis is brought to you for free and open access by the Electronic Theses and Dissertations at Digital Commons @ NJIT. It has been accepted for inclusion in Theses by an authorized administrator of Digital Commons @ NJIT. For more information, please contact digitalcommons@njit.edu.

Copyright Warning & Restrictions

The copyright law of the United States (Title 17, United States Code) governs the making of photocopies or other reproductions of copyrighted material.

Under certain conditions specified in the law, libraries and archives are authorized to furnish a photocopy or other reproduction. One of these specified conditions is that the photocopy or reproduction is not to be "used for any purpose other than private study, scholarship, or research." If a, user makes a request for, or later uses, a photocopy or reproduction for purposes in excess of "fair use" that user may be liable for copyright infringement,

This institution reserves the right to refuse to accept a copying order if, in its judgment, fulfillment of the order would involve violation of copyright law.

Please Note: The author retains the copyright while the New Jersey Institute of Technology reserves the right to distribute this thesis or dissertation

Printing note: If you do not wish to print this page, then select "Pages from: first page # to: last page #" on the print dialog screen

NJIT
New Jersey's Science &
Technology University

The Van Houten library has removed some of the personal information and all signatures from the approval page and biographical sketches of theses and dissertations in order to protect the identity of NJIT graduates and faculty.

DESIGN FOR MANUFACTURABILITY: RE-DESIGN OF PENCIL SHARPENER FOR THE EASE OF ASSEMBLY

By
AMIT R. RATHOD

Thesis submitted to the Faculty of The Graduate School of New Jersey Institute of Technology in the partial fulfillment of the requirements for the degree of Master of Science in Manufacturing Engineering

1991

APPROVAL SHEET

Title of Thesis:

Design for Manufacturability: Re-design of Pencil Sharpener For Ease of Assembly

Name of Candidate:

Amit R. Rathod

Master of Science in Manufacturing Engineering, 1991

Thesis and
Abstract Approved:

_____ _____

Dr. Nouri Levy
Associate Professor
Mechanical Engineering

Date

Signature of the other
members of committee:

_____ _____

Dr. Raj Sodhi
Director
Manufacturing Engineering

Date

_____ _____

Dr. Keith O'Brien
Professor
Mechanical Engineering

Date

VITA

NAME: Amit Ramanbhai Rathod

COLLEGE & INSTITUTIONS ATTENDED:

	DATE	DEGREE
Maharaja Sayajirao University of Baroda, Baroda, India	1982-85	B.S. (EE)
New Jersey Institute of Technology Newark, New Jersey	1989-91	M.S. (Mfg. E.)

ABSTRACT

A Design For Manufacturability (DFM) approach is used to analyze the existing design of a pencil sharpener, and to reduce and re-design the parts of pencil sharpener for the ease of assembly. The procedure for the selection of a suitable and economical assembly method is based on the Boothroyd and Dewhurst methods. Analysis of the initial design for manual assembly and re-design for automatic as well as manual assembly is presented. An algorithmic approach for simplified generation of all mechanical assembly sequences and selection of the assembly sequences is presented using De Fazio and Whitney approach.

To My Parents

ACKNOWLEDGEMENT

It is a great pleasure to express my deep gratitude to Dr. Nouri Levy, Associate Professor, Mechanical Engineering Department, for his valuable guidance and co-operation, throughout this Master's thesis work.

I sincerely express my thanks to Dr. Raj Sodhi, Director, Manufacturing Engineering, and Dr. Keith O'Brien, Professor, Mechanical Engineering, for reviewing and giving their valuable suggestions.

TABLE OF CONTENT

INTRODUCTION

1. DESIGN FOR MANUFACTURABILITY 1
   1.1 Reasons for Design for Manufacturability 1
   1.2 Integrating the product and process design 4
2. PARAMETERS AFFECTING MANUFACTURABILITY 6
   2.1 Cost 6
   2.2 Finishing 7
   2.3 Tolerances 8
   2.4 Design parameters 8
3. GUIDELINES AND RULES FOR DFM 10
   3.1 Standardization 11
   3.2 Choice of Work Material 11
   3.3 Shape of Work Material 12
   3.4 Shape of Component 12
   3.5 Accuracy and Surface Finish 13
   3.6 Guidelines for Design for Machining 14
      3.6.1 Standardization 14
      3.6.2 Raw Material 14
      3.6.3 Component Design 14
      3.6.4 Assembly 16
      3.6.5 Accuracy and Surface Finish 16
4. WAYS TO INCREASE MANUFACTURABILITY 17
   4.1 Background 18
   4.2 DFM: Principle and Rules 19
      4.2.1 Rules Based Approach 19
      4.2.2 Aximomatic Design Approach 23
   4.3 Quantitative Evaluation Methods 25
5. ECONOMICS OF ASSEMBLY 26
   5.1 Choice of Assembly Method 27
      5.1.1 Design for Manual Assembly 28
      5.1.2 Design for Automatic Assembly 30
      5.1.3 Design for Assembly:Robots 31
6. DESIGN OF THE PENCIL SHARPENER 32
   6.1 Existing Design 32
   6.2 Redesign of the Pencil Sharpener 38
7. ANALYSIS OF THE PENCIL SHARPENER DESIGN 48
   7.1 Analysis of the Existing Design for Manual Assembly 48
   7.2 Analysis of the Re-design for Automatic Assembly 52
8. ASSEMBLY SEQUENCING 64
   8.1 Determination of Assembly Sequence 64
   8.2 Approaches for Generation of Assembly Sequnces 65
   8.3 Choosing Good Assembly Sequence 71
9. FUTURE TRENDS IN DESIGN FOR MANUFACTURABILITY 75
   9.1 Commercial Software 75
   9.2 Research & Developments 76
      9.2.1 Artificial Intelligence / Expert Systems 78

CONCLUSION

BIBLIOGRAPHY

INTRODUCTION

Manufacturing cost of a product has an important effect on product profitability. A product design will determine 70% to 80% of its manufacturing cost, whatever the efficiencies of the manufacturing plant. It is surveyed that up to 85% of a product, manufacturing cost is typically determined before the manufacturing department is involved with the product design. Design engineers have little experience or virtually no experience about manufacturing operations. It is too late for making changes in the product design when manufacturing department is involved in product. So when product reaches the marketplace it will become overpriced or may lag behind the competition.

To remain competitive, manufacturers must move from an environment in which product problems are removed by inspection to one in which the design and process are controlled concurrently. Manufacturing excellence can be attained only by designing product and its process to address potential problems before they occur. Manufacturing cost must be considered during conceptual design phase when less than 50% of a product's costs are determined.

Design is a strategic activity by intention or by default. Manufacturability is the measure of a design's ability to consistently satisfy the product goals while being profitable.

In any industry the design inputs are customer requirements such as technical performance and price. During the conceptual design phase, the "functional" design of product is transformed into a "physical design." The design process includes product definition, product design, a prototype and test. The primary output is a prototype product that meets customer's requirements. Manufacturing department determined how the product would be produced,

assembled including the grouping of major subassemblies. Manufacturing department then selects appropriate materials, material handling equipments and integrate the production system into plant layout. The total cost required to manufacture the product then supplied to finance department which determines whether the product is viable to produce and with how much profit. If the product cost is to be reduced then entire design process has to be repeated.

This traditional vertical design process creates friction between various departments. If the manufacturing department wants to make a change in design that would simplify the manufacturing process and assembly process, a typical response from design department might be "We are run out of time or we cannot simplify more or you must live with the constraint." The problem is simply pushed up to the level until an inefficient product design that is difficult to manufacture is implemented. And perhaps, this is the most serious mistake companies make to get the manufacturing department involved in design issues at later stage. So what good is a product if it is not designed to be manufactured competitively?

CHAPTER 1

DESIGN AND MANUFACTURABILITY

To remain competitive manufacturers must move from an environment in which problems of products must be handled as they occur to one in which process and products are designed to overcome possible problems. The effectiveness of these changes is dependent on consideration of the design during the development stage. Manufacturability is a measure of a design ability to satisfy product goals while being profitable. [1].

Design for manufacturability represents a new awareness of the importance of the integration of product design from idea to production.

1.1 Reasons for Design for Manufacturability

The objectives of the design for manufacturability approaches are to identify product concepts that are easy to manufacture and assemble. Manufacturing process and product design must be integrated to ensure the best matching of needs and requirements. [2]

The design for manufacturability approach is the integration of product design and process planning into common activity. The design for manufacturability concept requires communication between all components of the production systems and should permit flexibilities to adapt and to modify the design and process during each stage of product realization.

Meeting these objectives requires the integration of different and complex types of information. These includes not only considerations of product form, function and fabrication but also the organizational and administrative procedures that increase the manufacturability of the product. The relationship of this integration is shown in figure 1. [2,3]

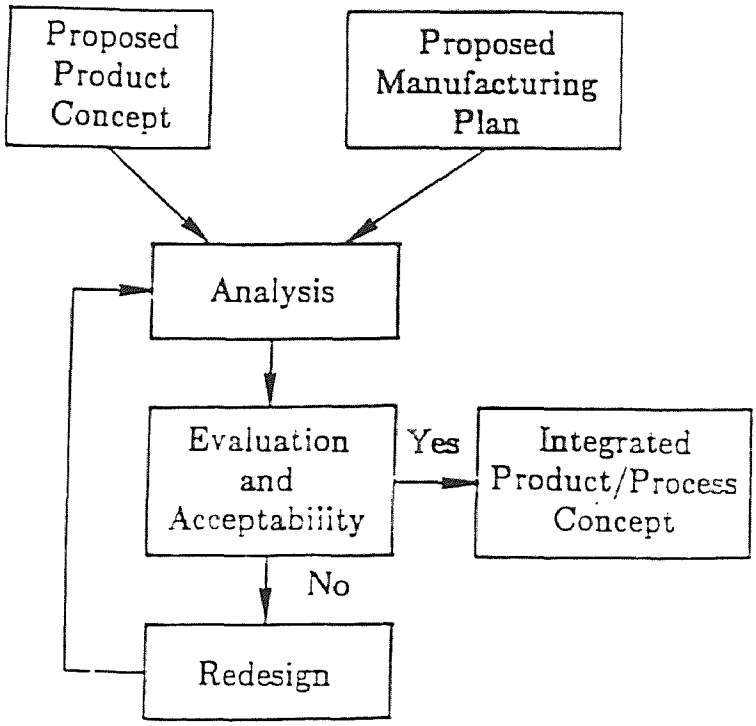

Analysis-Redesign Model

Figure 1

DESIGN PROCESS:

Design process is an iterative procedure involving the following six phases.

1. Recognition of need.
2. Definition of problem.
3. Synthesis
4. Analysis and Optimization.
5. Evaluation.
6. Presentation.

This six phases are interconnected with each other as shown below in figure 2.

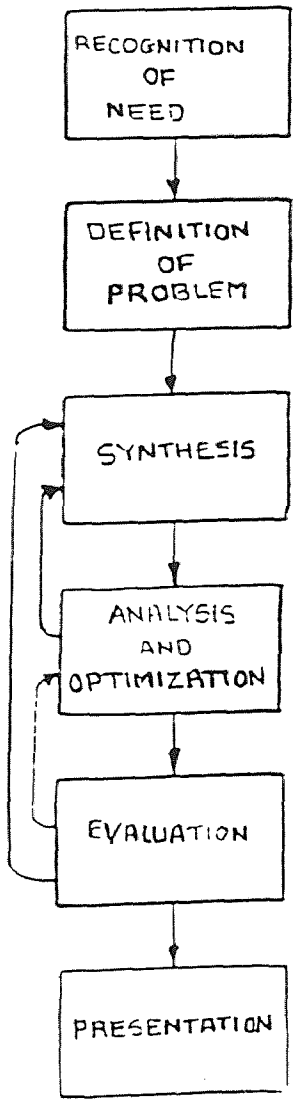

Figure 2 TYPICAL DESIGN PROCESS STAGES

The first phase is to identify the basic features of the product. The product specification can be set by customer or by marketing team. So the first activity is usually that of specifications. The designer sets the criteria for the performance of the product. The designer would like to have information about existing products of similar types, about the potential market, about the manufacturing constraints, standards, and so on.

The second phase is that of generation or synthesis of alternative designs. This is at the very heart of the design process. New designs may be only a modification of available product designs. New designs are created by permuating and recombining components or elements in completely new form.

The third activity or phase is that of analysis and evaluation. Here all alternate designs are tested in turn and compared to see if they meet the specifications. The test may be theoretical or may be practical using physical models or actual prototypes. Furthermore, always it is important to estimate the costs of materials and costs to manufacture. The characteristics of these design phases is that they tend to move from the general and tentative to more specific and definite.

1.2 Integrating product and process design:

Product design is generally concerned with form, fit and function. How to manufacture a product and how much it will cost usually asked at the later stages of product development. At this point, the design may have to be reworked to solve problems of quality production and to reduce costs. There should be an effective communication between design engineers and process

engineers from the very beginning of the product design. So " hand shaking" communication with various departments is the fundamental of the design for manufacturability concept.

Multifunctional teams are the most effective ways for companies to design product strategically. But, establishing a team is only the beginning. The five points that should be kept in mind by these teams are:

1. Determine the character of product not only in terms of its market but also in terms of its production.
2. Perform rigorous functional analysis on product by checking for opportunities to reduce the number of components and to build robustness into components.
3. Design parts for producibility by exploring available materials, by the combinational method for part development, and by jigless and fixtureless manufacturing, where possible.
4. Design the assembly sequence so that parts can be fit with least damage and quality control testing can be facilitated.
5. Design a factory system by stressing standard work methods, quick repair of equipment, and employee motivation.

Conception of product, in short, is a company-wide activity requiring involvement of all departments.

Chapter 2

PARAMETERS AFFECTING MANUFACTURABILITY

As stated earlier manufacturability has no fixed definition but it is a measure for manufacturing excellence. It is a process to address potential problems before they occur. There are numbers of factors that are directly related to manufacturability of product. The objective of the design for manufacturability approach is to identify product concept that is inherently easy to manufacture and to integrate manufacturing process and product design to ensure the best matching of needs and requirements. We cannot say that this is the best technique that is universally applicable for increasing manufacturablity. There are certain parameters that can be directly or indirectly related to manufacturability concept. These are not all, but least, parameters for increasing manufacturability for any kind of products. They are as follows:

(1) Materials

(2) Process Flexibility

(3) Output Quality

(4) Packaging/Handling

(5) Product Lead Time

There are certain attributes that affects above five parameters that in turn affects the manufacturability. Each parameter is discussed here one by one.

2.1 COST:

Cost is related to materials and processes that in turn effects manufacturability. Selection of materials is important for any kind of product. For a particular product, the functionality and reliability depends on the materials we choose. Some materials are very easy for machining but cost might be more

and some materials are less in cost but hard for machining. Material of some components is not compatible with the material of other components in the assembly of product. Availability of material is also important. If material is not easily available then product lead time may increase. To reduce product lead time we have to increase the capital inventory of raw materials. Substitute of the raw materials must be considered for increasing manufacturability. To increase manufacturability, we may use preformed raw material. This will reduce the machining of materials, increase quality of product and reduce product lead time. Process flexibility means choice of process that is best suitable for producing product. This means choosing the economical process for best quality product is critical. Quality and tolerances must be maintained by this economical process. What are the alternatives of economical process?. If automation is required then, we have to consider feasibility of that automation. [4]

2.2 FINISHING:

Some common pitfalls of parts increses finishing problems and these results in poor quality product or high production costs. Each finishing process has shortcomings for certain configurations but thorough knowledge of limitation of each method will help to assure quality product. Take an example of spraying of product. In spray processes both, liquid and powder, coating particles travel in straight lines form an atomizer to product. In electrostatic spraying, this lines are bent allowing some coating of out-of-sight areas. These surfaces are less protected for environmental corrosion. So to maintain output quality excellent, hidden product areas must be considered. [5]

Fixturing for finishing is another major factor. Consistent positioning of the product as it passes through many steps of the finishing process is essential to high quality product. During finishing, it is important that parts must be held

securely to avoid damage. Attachment points must be so arranged that they do not create finish blemishes by masking portions of the work. Drainage of processing solutions is greatly affected by part fixturing. We must be carefull while chosing materials and processes to reduce finishing problems.

Finished products influences handling and packaging. If product is glossy or ductile then it is essential to choose special kind of packaging materials and special care should be taken. This will increase post-production costs.

2.3 TOLERANCES:

Tolerance is an important factor for manufacturability. If tolerances of product are rigid then increasing manufacturability is very hard. Tolerances depends on the materials, process flexibility and product lead time. Tolerances depends on the materials we used. If the material is ductile than the stress, friction force during machining must be bear by materials. Some material can bear these parameters but it will increase the cost of tooling and machining. To reduce this cost we may use substitute of this material but then it will increase material cost. It may be possible that tolerance of product cannot be achieved by the available process. It requires special type of process. If tolerances are rigid then the scrap rate may be high. To reduce this, product is manufactured with some quality standards but it will increase manufacturing lead time. Balance must be maintained within these attributes. [6]

2.4 GENERAL PARAMETERS:

Following are general parameters that affects the conception of product.

1. Creativity
2. Knowledge of product
3. Knowledge of Interdisciplinary field
4. Materials
    - Ease of availability
    - Substitute for costly raw materials
    - Perishable/Non-perishable

Storage facility
Deterioration of raw materials over a period
Substitute of imports.

5. Tolerances
   - Interchangeable assembly
   - Limits
   - Fits
6. Cost
   - Raw material cost
   - Processing cost
   - Storage cost
   - Handling cost
   - Inventory cost
7. Machinability
   - Ductile/Nonductile
   - Hard to machine surface
   - Castings
   - Soft materials
8. Suitability of Machining process
   - Time
   - Tools
   - Coolants
   - Speed
   - Feed rate
   - Optimum machine utilization
9. Surface Finishing
   - Superfinishing
   - Honning
   - Electroplating
   - Spraying
10. Functionality
    - Must perform required function with an appropriate and economical manner.
11. Easy to use
12. Reliability
    - Function should perform when it is needed
13. Easy to Maintenance and Repair
    - Ease of availability of spare parts
    - Easy to replace
14. Aesthetics
    - Color
    - Finishing
    - Appearance
15. Type of Coding and Classification be used
16. Quality Standards
    - Methods to be adopted for quality control
17. Product Standard Codes for the particular product should be considered.
18. Appropriate packing
    - Easy to handle
    - Easy to shipping
19. Export standard should be match.

CHAPTER 3

GUIDELINES AND RULES FOR DESIGN FOR MANUFACTURABILITY

Many techniques are available to reduce manufacturing costs and increase manufacturability. These measures are as follows:

1. Improved materials, tools, and processes
2. More effective organization and factory layout, materials handling, and assembly techniques.
3. Automation, wherever it increases manufacturability.

Here we discussed two basic processes that converts raw materials into the product. The processes are primary process or machining process and secondary process or assembly process. The selection of suitable process greatly affects the product manufacturability. In the first section we will discuss the parameters of machining process to increase manufacturability and in the following and after that we will discuss parameters for assembly process for increasing manufacturability.

In machining process, extra material is removed. To some extent, machining is a wasteful process. We should design components that does not requires machining. Machining should be avoided to increase manufacturability. But this is impossible, so we must have other ways to deal with it. There are certain ways to reduce machining.

1. Standardization
2. Choice of work materials.
3. Shape of work materials.
4. Shape of component.
5. Accuracy and surface finish.

We will discuss above parameters one by one

3.1 STANDARDIZATION:

The first rule in designing for machining is to use standard components as much as possible. Many small components, such as nuts, washers, bolts, screws, seals, bearing, gears, and sprockets, are used in large quantities. Standard sizes that should be used wherever it is possible. The cost of these components is much lower than that of similar, nonstandard components.

A second rule is to minimize the amount of machining by pre-shaping the workpiece if possible. Workpieces can be, sometimes, pre-shaped by using casting or welded assemblies or metal deformation processes, such as extrusion, deep drawing, blanking or forging. For small batches the tendency is to produce the desired shapes by machining. The designer may be able to use preformed workpieces designed for a previous job, because the necessary patterns for castings of the tools and dyes for metal-forming processes are already available.

If standard components or standard preformed workpieces are not available, then the designer should attempt to standardize the machining feature incorporated in the design. Standardizing machining features means that the appropriate tools, jigs, and fixtures will be available for use, which can reduce manufacturing cost considerably.

3.2 CHOICE OF WORK MATERIAL:

When choosing the material for a component, the designer must consider applicability, cost, availability, machinability of materials, and the amount of machining required. Each of these factors influences the others, and the final optimum choice will generally be a compromise between conflicting requirements. The applicability of various materials will depend on the component's eventual function and will be decided by such factors as strength,

resistance to wear, appearance, corrosion resistance, and so on. The designer must consider factors that helps to minimize the final cost of the component. It should not be assumed, for example, that the least-expensive work material will automatically result in minimum cost for the component. It might be more economical to choose a material that is less expensive to machine but has a higher purchase cost.

3.3 SHAPE OF WORK MATERIAL

With the exception of workpieces that are partially formed before machining, such as forgings, casting and welded structures, the choice of the shape of the work material depends mainly on availability. The designer should check with supplier for the standard sizes and standard shapes of the raw materials and then design components that require the minimum of machining. Components manufactured from a circular or hexagonal bar or tube are generally machined on machine tools that apply a rotary primary motion to the workpiece. These types of components are called rotational components. The remaining components are manufactured from square or rectangular bar, plat, or sheet and are called non-rotational components.

3.4 SHAPE OF COMPONENT

Component shapes can be classified as rotational and non-rotational. The rotational components are those whose basic shape can be machined on lathes, boring mills, cylindrical grinders, or any other machine tool that applies a rotary primary motion to the workpiece. In considering design for machinability, it is important to know the ways in which the basic shapes can be readily changed by machining processes. Components having similar features and requiring similar sequences of machining operations allows to plan efficiently the layout of

machines in the factory to reduce the handling and transfer of components as much as possible. This will also help the designer to standardize components and avoid specifying machined features that the company is not equipped to handle.

3.5 ACCURACY AND SURFACE FINISH:

A designer will not generally want to specify an accurate surface with a rough finish or an inaccurate surface with a smooth finish. When determining the accuracy and finishing of machined surfaces, it is necessary to take into account the function intended for the machined surface. The specifications of too-close tolerances or too-smooth surfaces are the major components that adds unnecessarily manufacturing costs. The designer should specify the widest tolerances and roughest surface that would give acceptable performance for operating surfaces. As a guide to the difficulty of machining within required tolerances, we can say that

1. Tolerances from 0.127 to 0.25 mm. (0.005 to 0.01 In.) are readily obtained.
2. Tolerances from 0.025 to 0.05 mm. (0.001 to 0.002 In.) are more difficult to obtain and increase production costs.
3. Tolerances 0.0127 mm. (0.0005 in.) or greater, requires good equipments and skilled operators and adds significant production costs.

It is observed that any surface with a specified surface finish of 40 micro inch arithmetical mean or better will generally require separate finishing operations, which increases costs substantially. Even when the surface can be finished on the same machine, a smoother surface requirement increases costs.

3.6 GUIDE LINES FOR DESIGN FOR MACHINING:

These guidelines were developed over the years by experience from machining. The designer should keep in mind when considering the design of product for machining.

3.6.1 STANDARDIZATION:

1. Use standard components as much as possible.
2. Pre-shape the workpiece, if appropriate, by casting, forging, welding, and so on.
3. Use standard pre-shaped workpieces, if possible.
4. Employ standard machined features wherever possible.

3.6.2 RAW MATERIAL:

1. Choose raw materials that will result in minimum component cost.
2. Use raw material in the standard forms supplied.

3.6.3 COMPONENT DESIGN:

1. Try to design the component so that it can be machined on one machine tool only.
2. Try to design the component so that machining is not needed on the unexposed surfaces of the workpiece when the component is gripped in the work-holding device.
3. Avoid machined features that company is not equipped to handle.
4. Design the component so that the workpiece, when gripped in the work-holding device, is sufficiently rigid to withstand the machining forces.

5. Verify that when features are to be machined, the tool, tool holder, work, and work-holding device, is sufficiently rigid to withstand the machining forces.
6. Ensure that auxiliary holes or main bores are cylindrical and have L/D ratios that make it possible to machine them with standard drills or boring tools.
7. Ensure that auxiliary holes are parallel or normal to the workpiece axis or reference surface and related by drilling pattern.
8. Ensure that the ends of blind holes are conical and, in a tapped blind hole, that the tread does not continue to the bottom of the hole.
9. Avoid bent holes or dogleg holes.
10. Try to ensure that cylindrical surfaces are concentric and plane surfaces re normal to the component axis.
11. Try to ensure that the diameters of external features increase from the exposed face of the workpiece.
12. Try to ensure that the diameters of internal features decrease from the exposed face of the workpiece.
13. For internal corners on the component, specify radii equal to the radius of the rounded tool corner.
14. Avoid internal features for long components.
15. Avoid components with very large or very small L/D ratios.
16. Provide a base for work holding and reference.
17. If possible, ensure that the exposed surfaces of the component consist of a series of mutually perpendicular plane surfaces parallel to and normal to the base.
18. Ensure that internal corners normal to the base have a radius equal to the tool radius.

19. If possible, restrict plane surface machining (slots, grooves, etc.) to one surface of the component.
20. Avoid cylindrical bores in long components.
21. Avoid machined surfaces on long components by using work material preformed to the cross section required.
22. Avoid extremely long or extremely thin components.
23. Avoid blind bores in large cubic components.
24. Avoid internal machined feature in cubic boxlike components.

3.6.4 ASSEMBLY

1. Ensure that assembly is possible.
2. Ensure that each operating machined surface on a component has a corresponding machined surface on the mating component.
3. Ensure that internal corners do not interfere with a corresponding external corner on the mating component.

(Design for assembly is discussed as subject in next chapter.)

3.6.5 ACCURACY AND SURFACE FINISH:

1. Specify the widest tolerances and roughest surface that will give acceptable performance for operating surfaces.
2. Ensure that surfaces to be finish-ground are raised and never intersect to form internal corners.

CHAPTER 4

WAYS TO INCREASE MANUFACTURABILITY

Design for manufacturability is concerned with defining product design alternatives that facilitate optimization of the manufacturing system as a whole. A manufacturing system comprises of large number of distinct processes or stages that, individually or collectively, affects product cost, product quality, and productivity of the overall system. The interactions between these various facets of a manufacturing system are complex, and decisions made concerning one aspect have ramifications that extends to the others. This interaction is shown below. In a broadest sense, design for manufacturability is concerned with comprehending these interactions and using this knowledge to optimize the manufacturing system with respect to cost, quality and productivity. Specifically design is concerned with understanding how product design interacts with the other components of the manufacturing system. It also concerned with defining product design alternatives to facilitate "global" optimization of the manufacturing system as a whole. [1,2,7]

Figure 3

Typical DFM Process

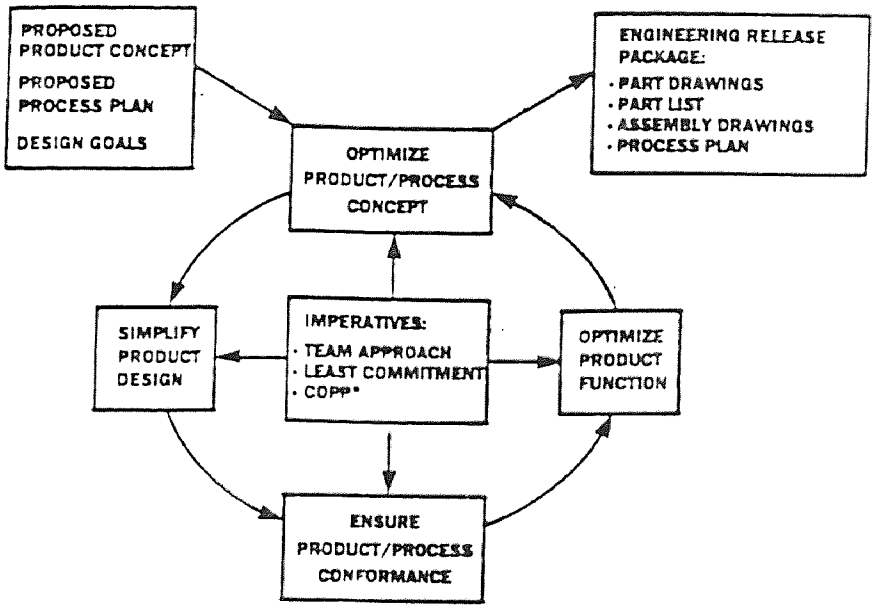

*CONTINUOUS OPTIMIZATION OF PRODUCT AND PROCESS

DFM can be divided into several sub-areas. Design for machining as discussed earlier involves the design of product and parts in ways that are compatible with the method of machining. The greatest single opportunity for product design improvement, using the concept of DFM, has been in the area of assembly. This activity involves minimizing the number of parts to be assembled and also designing the parts that remain to be easy to assemble to increase manufacturability.

4.1 BACKGROUND

DFM is a new way of looking at a very old problem. The importance of manufacturability in product design has been recognized for years. The well-known fact that up to 80% or more production decisions are directly determined by the product design. In spite of this most product design decision have historically been based on three major factors: product function, product life and component cost. The concept of design for manufacturability evolved out of this experience and is predicated on the recognition that:

* Design is the first step in product manufacturing.
* Every design decision, if not carefully considered, can cost extra manufacturing effort and productivity loss.
* The product design must be carefully matched to advanced technologies to realize the manufacturability improvements promised by these technologies.

To maximize the manufacturability, the quality of early decisions and thereby minimize the amount of engineering change, the DFM approach seeks to involve input from each participating department as early as possible. Ideally, convergence to " globally optimal" product and process decisions should occur

at the early stage of the project. This approach is depicted in figure below as simultaneous engineering.

Figure 4

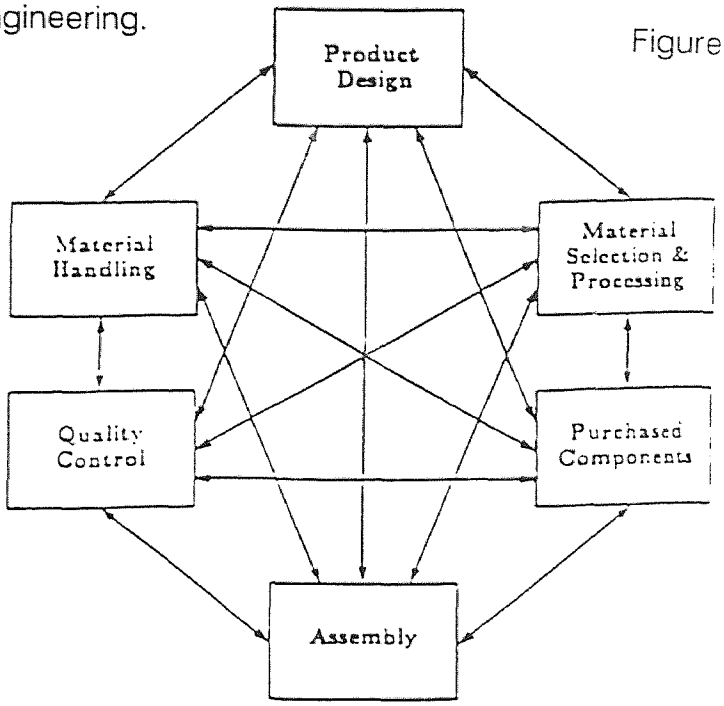

The learning experience associated with implementing advanced manufacturing technology with the constraints imposed by the classical approach has caused DFM to develop in many different ways. One approach to implement DFM is to use an appropriate sets of principles and rules. These helps in designing of the product and then evaluating and redesigning the product. Much of the motivation behind development of the DFM philosophy lies in the need to build company wide teams that truly work together in the development and manufacture of a product.

4.2 DESIGN FOR MANUFACTURABILITY: PRINCIPLES AND RULES:

4.2.1 RULES BASED APPROACH

Design for manufacturability principles, rules, guidelines, and many clever suggestions and tips have been stated in systematic and codified ways. Use of this human-oriented, largely heuristic body of knowledge helps to narrow the range of possibilities so that the mass of detail that must be considered is within

the capacity of the engineer. Many DFM principles are deeply rooted in the long history of designing and manufacturing areas. Most have been learned practically. Knowledge of these principles and the ability to apply them has always been the hallmark of the experienced expert designer and manufacturing engineer. These principles are discussed below:

MINIMIZE TOTAL NUMBER OF PARTS:

Less parts means less of everything that is needed to manufacture a product. This includes engineering time, drawing, production control records, inventory, stock locations, amount of material handling equipment, amount of details and calculations, number of items to inspect and type of inspections required, amount of complexity of part production equipment and facilities, assembly, and training. We can put it in another way as eliminated costs for nothing to make, assemble, move, handle, orient, store, purchase, clean, inspect, rework, service.

A part is a good candidate for elimination if there is (1) no need for relative motion, (2) no need for subsequent adjustment between parts, (3) no need for service of repairability, and (4) no need for materials to be different. Part reduction should not exceed to the point of diminishing return where further part elimination adds cost and complexity because the remaining parts are too heavy or too complicated to make and assemble, or are too unmanageable in other ways.

Integral design, or the combining of two or more parts into one, is another approach. Integral design reduces the amount of interfacing information required, and decreases weight and complexity. Although switching to a different manufacturing process may lead to more costly parts. Experience with part

integration has shown that more costly parts often turns out to be more economical when assembly costs are considered.

USE STANDARD COMPONENTS:

A stock item is always less expensive than a custom-made item. Standard components require little or no lead time and are more reliable because characteristics and weakness are known. They can be ordered in any quantity and at any time. They are usually easier to repair and replacements are easier to find.

PARTS TO BE MULTIFUNCTIONAL:

Combine the function of parts wherever possible. For example, design a part to act both as a spring and a structural member, or to act both as an electrical conductor and structural member. An electronic chassis can be made to act as electrical ground, a heat sink, and a structural member. These examples illustrate inclusion of functions that are only needed during manufacture.[8]

PARTS FOR MULTI-USE:

Many parts can be multi-use. Key to multi-use part design is identification of part candidates. One approach involves sorting all parts manufactured or purchased by the company into tow groups consisting of (1) parts that are unique to particular product or model and (2) parts that are generally needed in all products and/or models. Multi-use parts are created by standardizing similar parts. In standardizing, the designer should sequentially seek to (1) minimize the number of part categories, (2) minimize the number of variation in each category,

and (3) minimize the number of design features within each variation. Once developed, the family of standard parts should be used wherever possible in existing products and used exclusively in new product designs. Also, manufacturing processes and tooling based on a composite part family should be developed. Individual parts can then be obtained by skipping some steps and features in the manufacturing process.[9]

PARTS FOR EASE OF FABRICATION:

This principle requires that individual parts must be using the least costly material that just satisfies functional requirements and such that both material waste and cycle time are minimized. This in turn requires that the most suitable fabrication process must be used to make each part and that the part must be properly designed for the chosen process. Also, secondary processing should be avoided whenever possible. Secondary processing can be avoided by specifying tolerances and surface finish carefully and then selecting primary processes.[9]

MINIMIZE ASSEMBLY DIRECTIONS

All parts should be assembled from one direction. Extra erections means wasted time in motion ,as well as, more transfer stations, more inspection stations, and more fixture nests. This increases cost and increases wear and tear on equipment due to added weight of an inertia load, and increases reliability and quality risks. The best possible assembly is when all parts are added in a top down fashion to create a z-axis stack. Multimotion insertion should be avoided. Ideally, the product should resemble a z-axis "club sandwich" with all parts positively located, as they are added.

MINIMIZE HANDLING

Position is the sum of location and orientation. Position costs money. Therefore, parts should be designed in such a way that its position is easy to achieve and the production process should maintain that position once it is achieved. The number of orientations required during production equates with increased equipment expense, greater quality risk, slower feed rates, and slower cycle times. To assist in orientation, parts should be made as symmetrical as possible. If polarity is important, then an existing asymmetry should be accentuated or an obvious asymmetry should be designed in, or a clear identifying mark provided. Also, orientation can be assisted by designing features that helps to guide and to locate parts in the proper positions. Parts should be designed to avoid tangling, nesting, and shingling in vibratory part feeders.

4.2.2 AXIOMATIC DESIGN APPROACH

The DFM principles discussed above are empirically derived and verified for specific design situation. Sakamoto and his associates at MIT have proposed an alternative approach called "axiomatic approach". In this approach, a small set of global principles, or axioms, is hypothesized. These axioms constitutes guidelines or decision rules that can be applied to make decisions throughout the synthesis of a manufacturing system and if correctly followed, lead to decisions that maximize the productivity of the total manufacturing systems. By definition, an axiom must be applicable to the full range of manufacturing decision. Design axioms cannot be proved, but accepted as general truths because no violation or counter example has ever been observed. Although several axioms were originally proposed, these have been reduced to the following fundamental axioms as stated by Sakamoto.[10]

AXIOM 1: In good design, the independence of functional requirements is maintained.

AXIOM 2: Among the design that satisfy Axiom 1 the best design is the one that has the minimum information content.

These two axioms imply that, specification of more functional requirements than necessary results in over-design whereas specification of insufficient functional requirements results in unacceptable solutions.

Design corollaries are immediate or easily drawn from consequences of the design axioms. In contrast to the design axioms, corollaries may pertain to the entire manufacturing system, or may concern only a part of the manufacturing system. Some important corollaries given by Suh and Yasuhara are as follows:

1. Decouple or separate parts or aspects of a solution if functional requirements are coupled in the design of products or processes.
2. Integrate functional requirements into a single physical part or solution, if they can be independently satisfied in the proposed solution
3. Minimize the functional requirements and the constraints.
4. Use standardized or interchangeable parts whenever possible.
5. Make use of symmetry to reduce the information content.
6. Conserve materials and energy.

The second approach states general rules that will always leads to good results and, as such, offers a way to proceed from the very general to the specific than beginning with details. Axiomatic design tends to improve the quality of early decisions.

4.3 QUANTITATIVE EVALUATION METHODS:

A second, very significant part of DFM has been the development of quantitative evaluation methodologies that allow the designer to rate the manufacturability of product quantitatively [11]. These methodologies provide systematic, step-by-step procedures, which ensure that when the DFM rules are being correctly applied it encourages the designer to improve the manufacturability of the product and shows the way by providing insight and stimulating creativity. It rewards the designer with improved qualitative scores, if he does well.

At present, there are two qualitative evaluation methodologies in use, both of which focus on ease of product assembly. Perhaps the best known and most widely used of these methods is the design for assembly method developed by Boothroyd and Dewhurst at University of Rhode Island [12, 13, 14, 15, 16, 17].

CHAPTER 5

ECONOMICS OF ASSEMBLY

Design for assembly is largely based on industrial time study methods. These methods is used to minimize cost of assembly within constraints imposed by other design requirements. Design for assembly is a two-step process. First, reduce the number of parts in a product and second, simplify the remaining assembly operations. Part reduction provides the greatest opportunity for savings in manufacturing cost since a reduction in the number of parts can reduce direct labor, material and overhead cost hence it increases manufacturability. Fewer parts means fewer parts to assemble, fabricate, purchase, inspect, store, receive, draw, control (i.e. production, planning and control) and count (e.g. accounting).[18] Researchers have found that parts can be combined if

1. they do not move relative to each other during the product's operation or service;
2. they can use the same materials and
3. they do not require disassembly during service.

Implicit in any analysis of manufacturing cost, there are tradeoffs between product quality and manufacturing cost and between various categories of manufacturing costs. Designers make tradeoffs between a product's cost and its size, appearance, reliability and serviceability. Further, alternative design may affects assembly, fabrication, purchasing, inventory and other overhead cost categories in conflicting ways. For example, a new injection molded part may reduce assembly cost but it may also increase purchasing and inventory costs because it is a non-standard part. Therefore, design engineers need a simple ,

method to estimate, analyze and compare these cost to differences in product quality of each alternative.

5.1 CHOICE OF ASSEMBLY METHOD

When productivity improvements are sought, design for ease of assembly must be given the highest priority. Recent studies of various products have shown that reductions of 20 to 40% in manufacturing cost and increases of 100 to 200% in assembly productivity are readily obtainable through proper consideration of assembly at the design stage. First step in these techniques is to identify the assembly process that is most likely to be economic for a particular product. The important reason for early process selection is that the manual assembly differs widely from automatic assembly in the requirements it imposes on product design. An operation that is easy for a person may be impossible for a robot or special purpose workhead, and operations that are easy for machines may be difficult for people. Here only basic information is needed for making a good estimate of the most economical assembly method. Knowledge of product's design detail is not necessary. Basic information required includes production volume per shift, number of parts in the assembly, single product or a variety of products, number of parts required for different styles of the product, number of major design changes expected during product life, and the company investment policy regarding labor saving machinery.

The cost of assembly of a product is related to both, the design of the product and to the assembly process used for its production. Assembly cost is low when the product is designed in such a way that it can be economically assembled by the most appropriate process. The three basic processes are manual assembly, special purpose machine assembly, and programmable machine assembly.

In manual assembly the tools required are generally simple and less costly than those employed in automatic assembly machines, and the downtime caused by defective parts is usually negligible. Cost of manual assembly is relatively constant and independent of production volume. Manual processes have considerable flexibility and adaptability. It is economical to provide the assembly operation with mechanical assistance in order to reduce assembly time

Special purpose assembly machines are those that have been built to assemble a specific product. These machines consist of transfer devices with single purpose workheads and parts feeders at the various workstation. The transfer devices can operate on an synchronous principle or a free-transfer(non-synchronous) principle. These special-purpose machines are costly and require considerable engineering development before they can be put into service. Downtime caused by defective parts can be a serious problem unless the parts have high quality. Also, special-purpose machines work on a fixed cycle time, with a fixed rate of production. If these machines are underutilized or if cannot be used for any other purposes these results in increases assembly cost.

Programmable assembly machines are similar to the non-synchronous special-purpose machines except that the work-heads are general-purpose and programmable. This arrangement allows more than one assembly operation to be performed at each workstation. It also provides for considerable flexibility in production volume and greater adaptability to design changes and different product styles. For lower production volumes, robotic assembly with a single robot workstation may be preferable.

5.1.1 Design for manual assembly

The basic Design for Assembly evaluation procedure consists of comparing an "ideal" assembly time with an estimated "actual" assembly time

required for a particular product design. To calculate the "ideal" assembly time, the theoretical minimum number of parts is first determined by asking the following questions of each part in the assembly:

1. Does the part move relative to other parts already assembled?
2. Must the part be of a different material than or isolated from all other parts already assembled?
3. Must the part be separate from all other parts already assembled because otherwise necessary assembly and disassembly of other parts would be impossible?

If the answer to the part under consideration is "yes" then the part is enter into calculation; otherwise a "zero" is assigned. The theoretical minimum number of parts is the sum of the numbers assigned to each part in the assembly. The "ideal" assembly time is calculated assuming an assembly containing the theoretical minimum number of parts, each of which can be assembled in an "ideal" time of 3 seconds. This ideal time assumes that each part is easy to handle and insert and that about one-third of the parts are secured immediately upon insertion with well designed snap-fit elements.

To estimate the "actual" assembly time, penalties in seconds are assessed for handling difficulties and insertion difficulties associated with each actual part in the assembly. The penalties are based on a compilation of standard time study data as well as dedicated time study experiments. This data is tabulated as a function of part geometry, orientation features, handling features, method of attachment, etc. in the form of charts, one for manual handling and one for manual insertion. "Actual" assembly time is the sum of handling and insertion times obtained from the charts for each part in the "actual" assembly. The manual assembly design efficiency is computed as the ratio of "ideal" assembly time to "actual" assembly time.

Following evaluation, the assembly is designed for ease of assembly by first eliminating and combining parts using insights gained from the theoretical minimum number of parts determination. Following this, the remaining parts are redesigned to provide features which reduce assembly time, again using insights gained from the Design for Manufacturability analysis. To measure improvements in assemblability, the redesigned assembly can be analyzed and the resulting efficiency compared with that of the old design. An important result of the Design for Assembly analysis is that it clearly shows that even products intended for manual assembly can benefit greatly if assemblability is considered early in the product design process.

5.1.2 Design for Automatic Assembly

The design for automatic assembly analysis consist of four steps:

1. Estimate cost of automate bulk handling and oriented delivery;
2. Estimate cost of automatic part insertion;
3. Decide whether the part must be separate from all other parts in the assembly;
4. Combine the results of steps 1-3 to estimate the total cost of assembly.

Although more computations are involved, basis for the design efficiency calculation and procedure for product redesign is essentially the same as for manual assembly. Cost penalties associated with ease of automatically feeding and orienting of individual parts is assessed based on consideration of part geometry, and flexibility, weight, size, propensity to nest and tangle, etc. Automatic workhead cost for part insertion is estimated based on classification of the insertion processes involved.

5.1.3 Design for Assembly : Robots

Robots can slash assembly costs. But as with any other assembly process, robot-based techniques must be taken into account at the design stage. The analysis procedure discussed below shows how the right design decisions can cut the cost of robotic assembly.

Products intended for robotic assembly can be analyzed in much the same way as those intended for manual assembly or automatic assembly. The is assembled product and every part or subassembly of the product is analyzed to determine the cost and time required to add it to the assembly. In addition, the part is examined to see whether it must be separate, or whether it can be eliminated or combined with some other component. These results guides redesign, indicating where additional effort is most likely to cut production cost. The economic analysis that indicates whether manual, automatic, or robotic assembly is likely to be most economical can be shortened and made easier with the aid of newly developed computer programs. The analysis system shows the effect of design decisions on the cost of robotic assembly. The system can be updated easily, so that changes in the cost, speed, or cycle time can be factored into the analysis. The robot used as the basis for cost comparisons has two area, each with four degree of freedom. These are X, Y, and Z, translations and wrist rotation about the Z axis, which is at right angles to work fixture. Wrist rotation is essential to enable the robot to orient rotational parts about their axes of insertion. The relative cost of the robot arms needed to assemble a particular product is then determined by the difficulty of the insertions. Time estimates are made under the assumption that the assembly system has enough compliance to facilitate part insertions. The compliance may be built into the robot wrist, the work fixture, or both. Also, either the robot gripper or the work fixture is assumed to have sensors that detect the presence of parts and verify insertion.

Chapter 6

DESIGN OF THE PENCIL SHARPENER

6.1 EXISTING DESIGN

The current design of the pencil sharpener consists of the following parts:

1. Switch
2. Sharpening Device Housing
3. Sharpening Device
4. Divider
5. Plate
6. Screws (2)
7. Fastener
8. Square Plate
9. Gear Mechanism
10. Electrical Motor
11. Square Plate
12. Screws (2)
13. Back Plate
14. Plug
15. Screws(2)
16. Housing
17. Base Plate
18. Screws (2)
19. Plastic Box

The total number of parts in this design are twenty three

Description of the main parts follows:

Gear Wheel: The wheel has teethes that are connected to the gear mechanism. The main function of this metal wheel is to rotate sharpening device. It is connected to gear mechanism with the help of round metal screw and metal fasteners. It is a moving part. Basically, this part is used to change the speed of sharpening device. This part can be eliminated if we use some other type of mechanism.

Gear Mechanism: The gear mechanism is connected to metal wheel and other end is connected to the rotor of the motor. When motor is on, it rotates the gear mechanism and thus metal wheel will also rotate. This in turn rotates sharpening device. Gear mechanism has three kind of gear ratio. When pencil is inserted and because of touch button type mechanism motor will start and gear ratio is low. So sharpening device will rotate slow. When pressure on pencil is increased the ratio of the gear mechanism is changed, from low to medium to high, hence sharpening device runs at maximum speed. This part also can be eliminated if we use other proper mechanism.

Motor Assembly: This is a single phase motor which run on 110V and 60 Hz power supply. It is mounted on the back plate with the help of plate screws. To avoid any electrical accident there is a plastic fastener between motor assembly and back plate.

Plastic Cover: This cover is made from plastic or metal sheet. It provides a housing for the whole assembly. It is mounted on the base plate with the help of two screws. It has a hole on the front side for pencil insertion. If the assembly process is automated difficulties may occur in orienting this part, hence it needs design changes.

Plastic Box: It's a hollow box which is open at top. It is placed below of the sharpening device. It is used to collect the remains of the pencil. It can be taken out easily for cleaning. There is no need for change in design for this part.

Plastic Housing: This is used to house pencil sharpening assembly. This is used to protect other assembly from pencil dust and other particles. It has hole on the front as well as on the back side. It also consist of push button mechanism which is connected to the motor. Sharpening device shaft is connected to wheel. Housing is connect to plastic divider with the help of two screws. Due to the screws, orientation is difficult. To avoid this, design changes is required for this part.

Plastic Divider: This divider is used to separate plastic housing and motor assembly. It is consist of one hole which is used to connect sharpening device shaft to plastic wheel. It has two grooves for screws. It will be difficult for special purpose tool/robot to reach correct location for this screws. Difficulties may arise in orienting this part correctly in to the groove, so design changes is needed for this part.

Back Plate: Motor is mounted on back plate with the help of two screws. The orientation of this plate is difficult for automated assembly. This part needs design changes.

Some of the above parts are shown in figures 7-9.

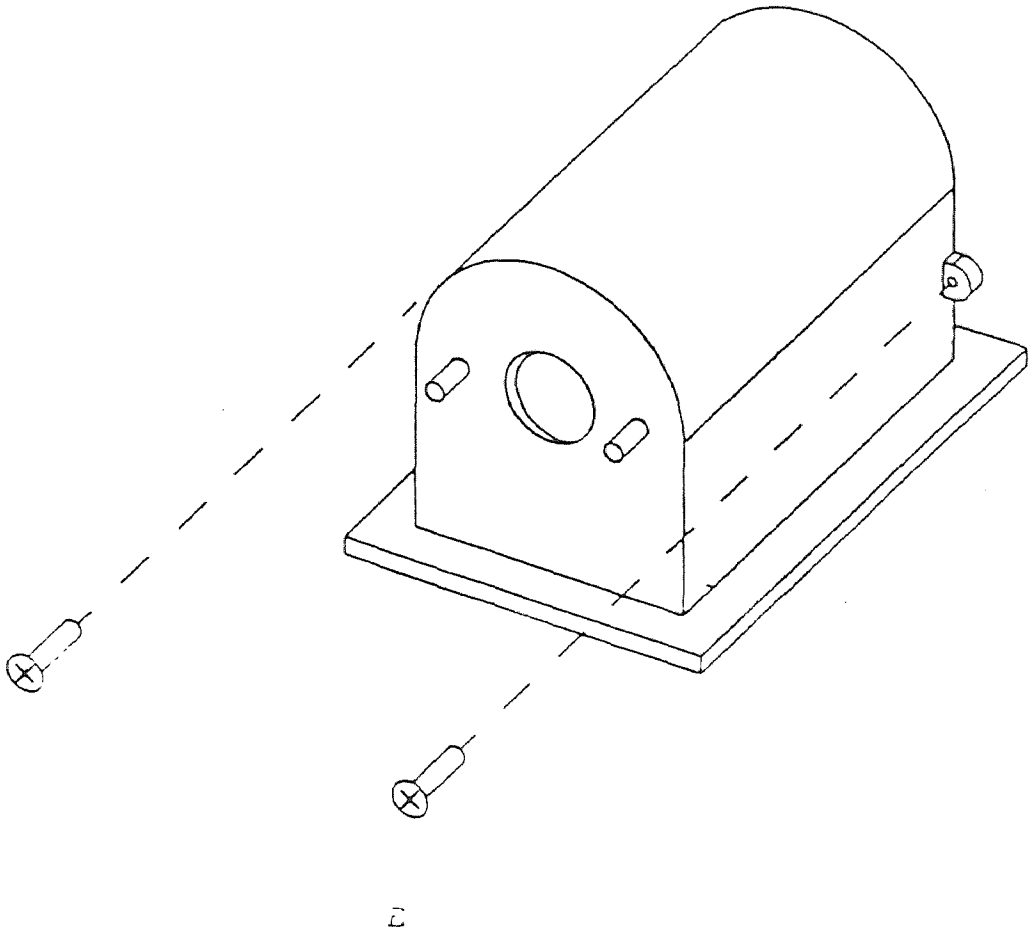

EXISTING DESIGN OF
SHARPENING DEVICE HOUSING

Figure 8

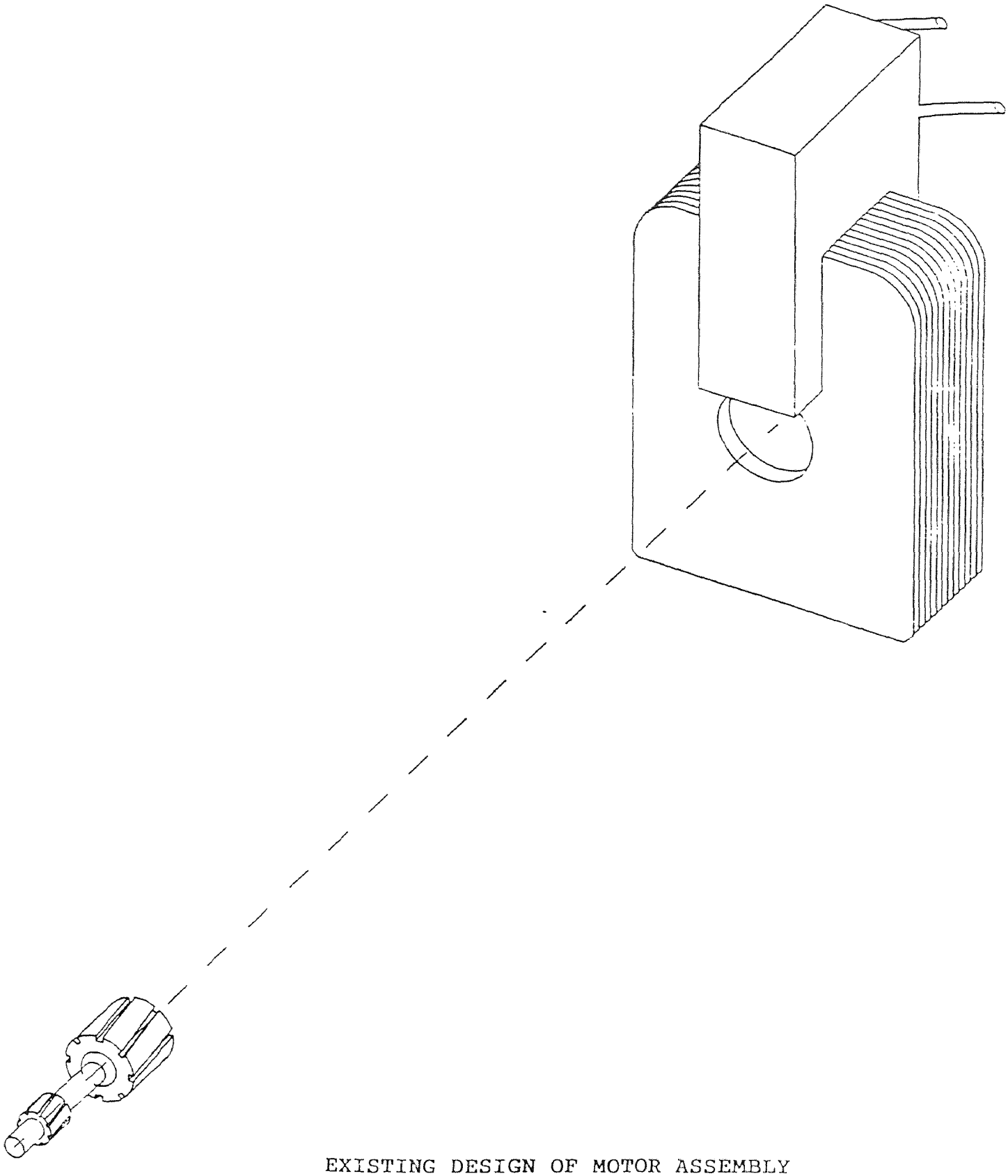

EXISTING DESIGN OF MOTOR ASSEMBLY
AND GEAR MECHANISM

Figure 6

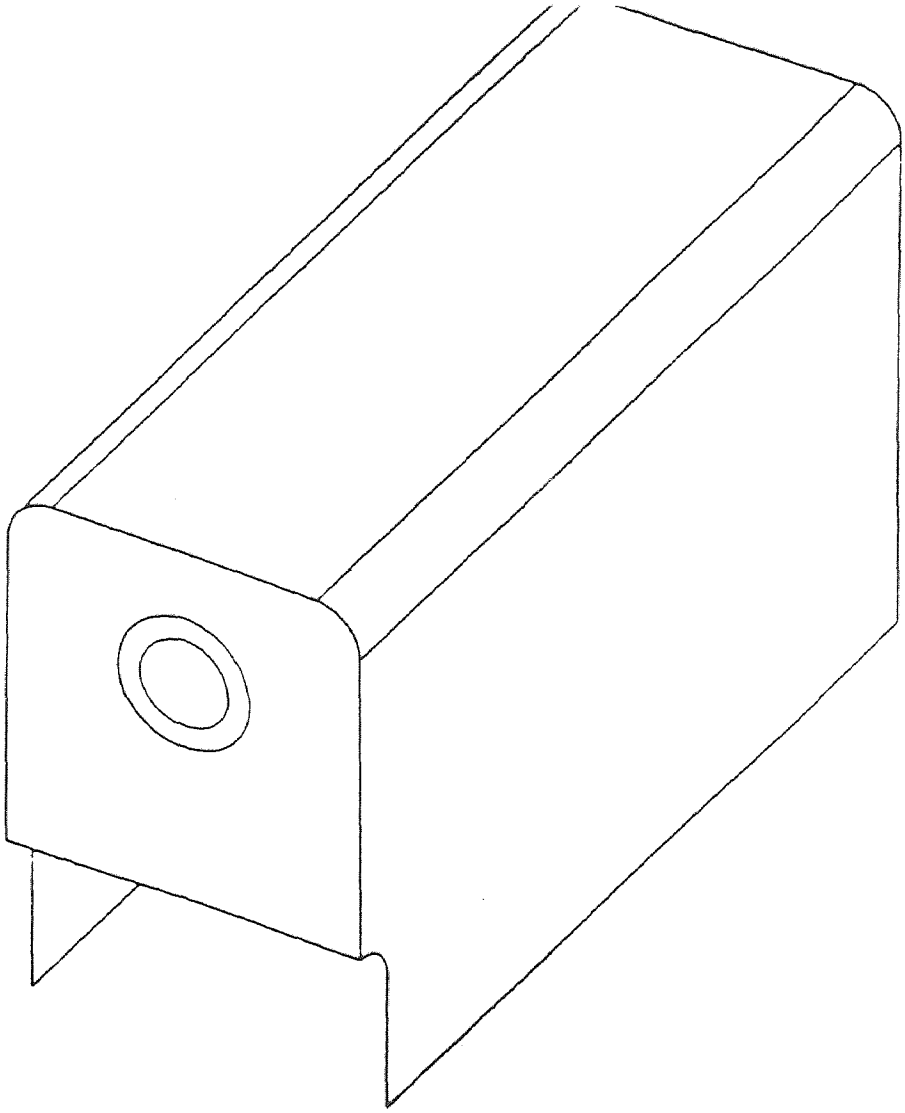

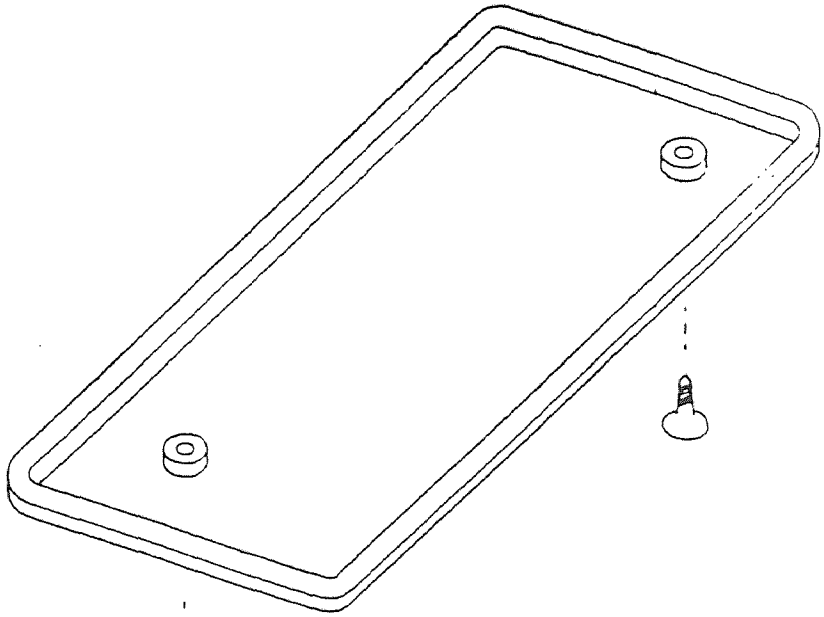

EXISTING DESIGN OF HOUSING AND BASE PLAT

Figure 5

6.2 RE-DESIGN OF THE PENCIL SHARPENER

Re-design of the pencil sharpener for automatic assembly is carried out mainly by following the design rules for automatic assembly by Boothroyd and Dewhurst method.[17] As stated by Boothroyd and Dewhurst, it is important that while designing any product designer should always keep in mind that assembly cost will usually increase in proportion to the number of parts in the product. Because of this reason, attention should be given to design of each individual parts in assembly operations. Small items such as separate fasteners, screws, washers, clips etc., which seems not significant in values, can increase the assembly cost very high. In fact these items, as a group, can often account for major part of the cost of assembly.

The above statements is equally valid for manual assembly, but the effect is more evident with automatic assembly or robot assembly since every part to be added requires a feeding and orienting device, a workhead at least one extra work carrier, a transfer device, and results in an increase in the size of the basic machine structure. Study shows that elimination of a single fastener for example, could save $20,000 or more in the cost of the assembly machine. Moreover, the resulting machine, because of the reduced number of workstations would generally operate with increased efficiency.

As each new part is added during assembly it is judged according to three simple criteria.[17] If it satisfied one or more of the criteria then it is counted as a separate part. When these criterias have been applied to all the parts, the sum of the allowable separate parts will then be the theoretical minimum.

The criteria are:

1. Does the part move relative to all other parts already assembled?

2. Must the part be of a different material or be isolated from all other parts already assembled? Only fundamental reasons concerned with material properties are accepted.

3. Must the part be separate from all other parts already assembled, because otherwise necessary assembly or disassembly of other would be impossible?

In the redesign of the pencil sharpener above criteria are applied to each of the parts and above all design of ease of maintenance is also applied. The rules are intended to be applied objectively without regard to the apparent feasibility of eliminating parts or combining parts with others.

Based on the Boothroyd and Dewhurst's rules of design for maintainability, the criteria for theoretical minimum number of parts is applied to each part of the existing design of pencil sharpener. The design rules stated in the previous chapters are also taken in to consideration and few parts are completely eliminated in the re-design and design of other parts are changed to achieve ease of assembly. The main change in re-design is the elimination of gear mechanism and screws. Following is the list of the parts that are completely eliminated:

1. Base plate screws	2
2. Back plate screws	2
3. Housing screws	2
4. Metal Wheel	1
5. Round metal plate	1
6. Fastener	1
7. Gear mechanism	1
8. Square plastic plate	1
9. Base Plate	1
10 Plug	1

Main design change is the elimination of gear mechanism. The gear mechanism is used to change the speed of sharpening device. Instead of this the push button mechanism is connected to pressure transducer. This pressure transducer is connected with PCB assembly which is inserted in the plastic box with the help of guiding rails. As the pressure increased pressure transducer gives appropriate signal to variable resistor in such a way that the resistance of this resistor will be decreased. This in turn increase the speed of the motor which in turn increase the speed of the shaft of sharpening device. Following is the description of main part after re-design:

Plastic Housing: The design of housing is changed, but the function remains the same as original. Instead of two screws which are used to assemble housing and divider, compliant tab is used. This compliant tab is inserted in the square cutout of the divider. This are shown in the figure 10.

Divider: The re-design of divider is considerable. Instead of holes for screws, it has square cutout. In new design, it has pegs which will hold the motor assembly. It has to wings or compliant tabs which are used to assemble the divider and the back plate.

Connector: Connector is used to connect the shaft of rotor of motor and the shaft of pencil sharpening device. It is used to transmit power (to provide rotation) from motor to sharpening device

Back Plate: New back plate consist to cutout. One cutout holds the devider-motor assembly while other holds main housing. Inside of back cover there will be electrical connector which will just not hold the PCB assembly, but also provide electrical connection to PCB assembly and pressure transducer. It has two pin that are connected to the coil of the motor assembly. This will help to hold the motor assembly.

PCB Assembly: PCB assembly will contain the required variable resistor which is connected to motor, as well as, pressure transducer assembly. It will be inserted into the Housing with the help of guiding rails. It's male end is inserted into the electrical connector of back plate while front end has pressure-transducer assembly. It's front end has hole for insertion of pencil.

Housing: Major design modification are made in the Housing. It will now totally enclosed the whole assembly. The base plate is eliminated. Housing has two compliant tab which are inserted in the cutout of back plate. It can be easily taken out for maintenance. The front end has a hole for pencil insertion. Below the hole, the rubbish collector box is inserted. This box can be taken out very easily.

Above parts are shown in figures 11-14. Complete re-designed pencil sharpener is shown in figure 15.

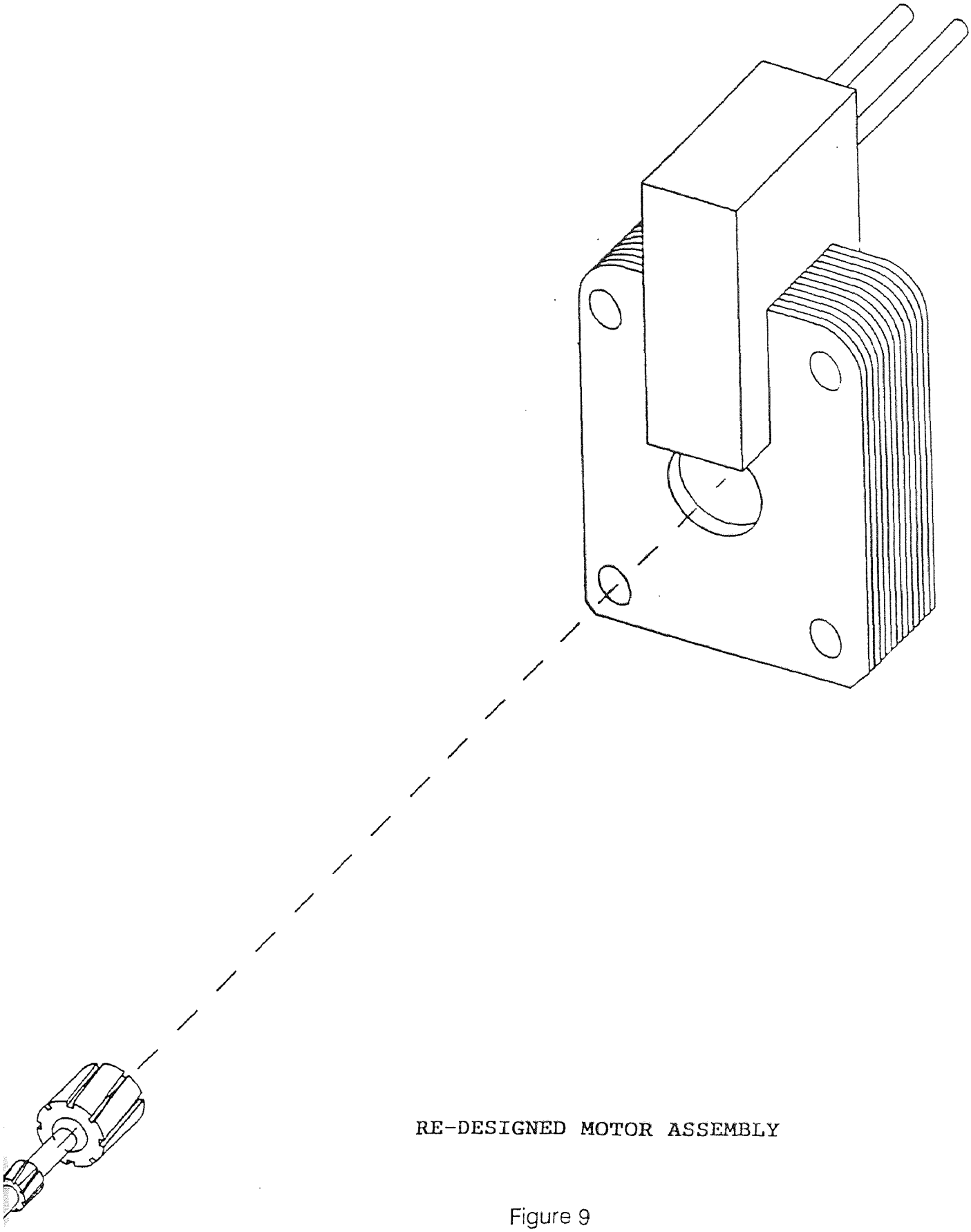

RE-DESIGNED MOTOR ASSEMBLY

Figure 9

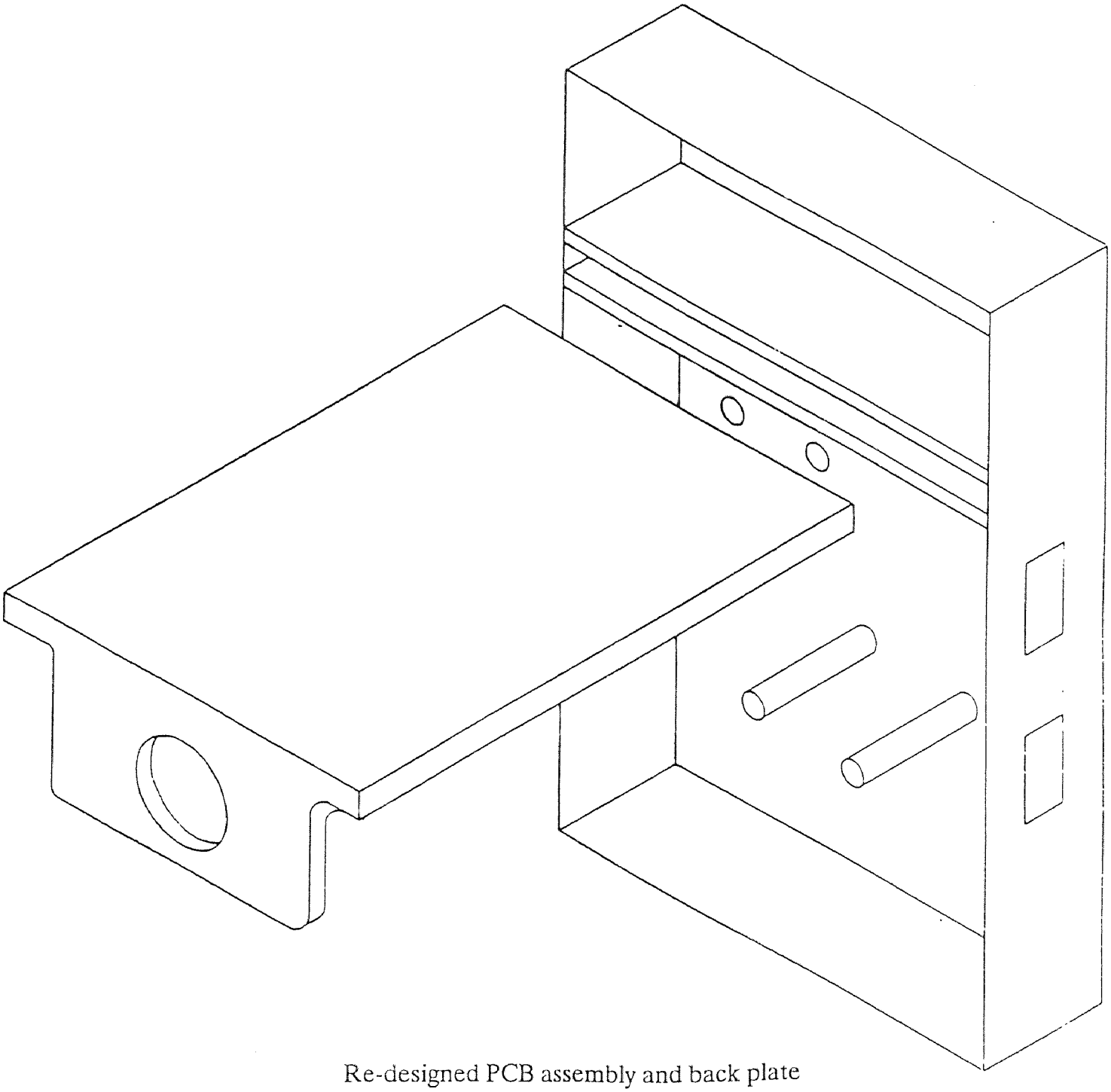

Re-designed PCB assembly and back plate

Figure 10

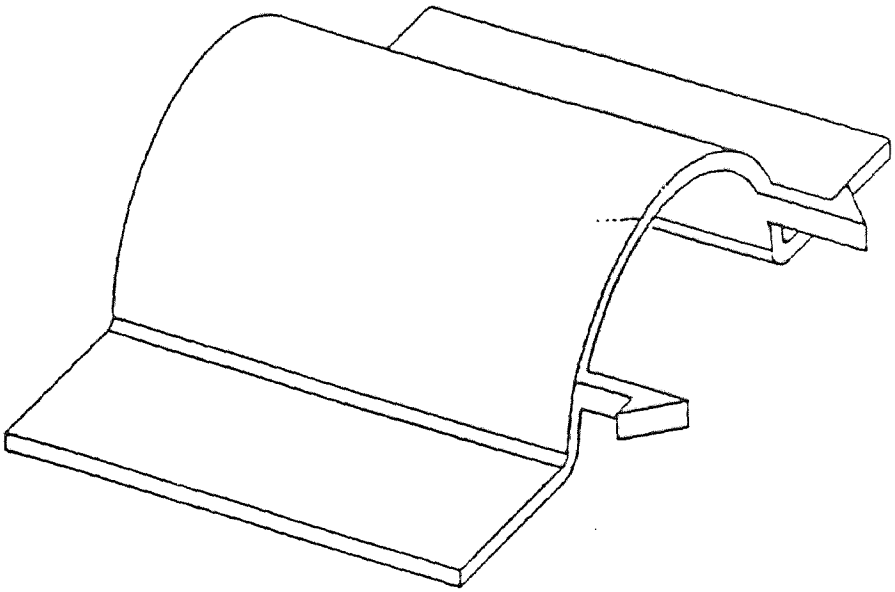

RE-DESIGNED SHARPENING
DEVICE HOUSING

Figure 11

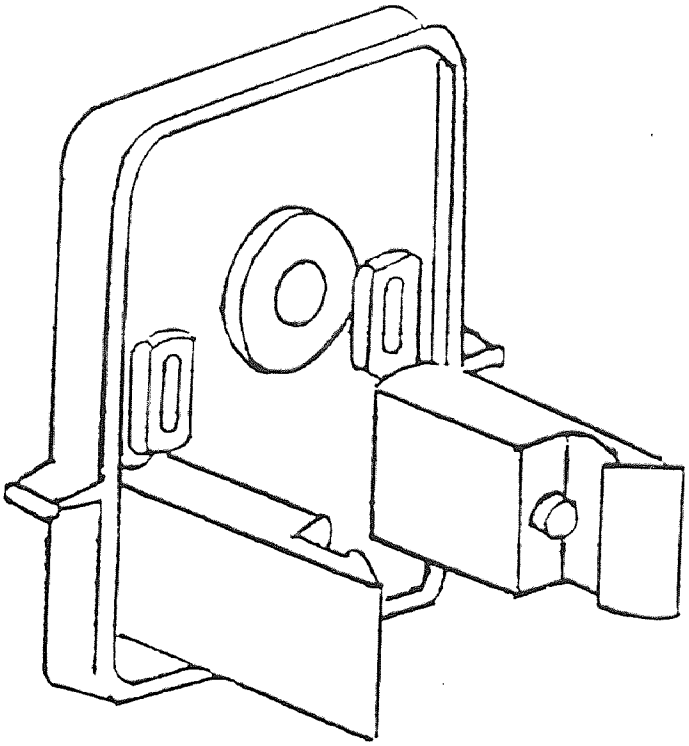

RE-DESIGNED DIVIDER

Figure 12

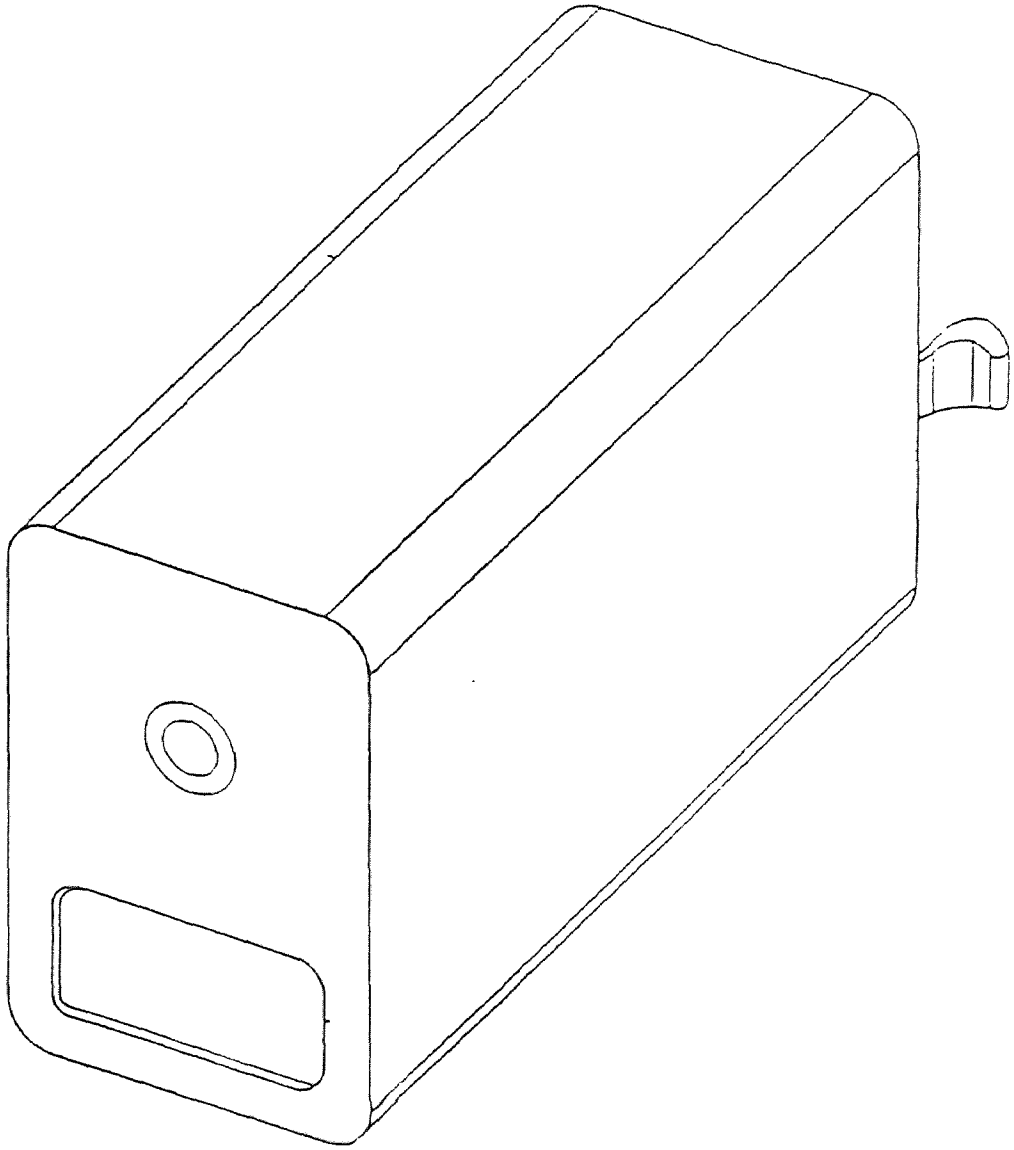

RE-DESIGNED HOUSING

Figure 13

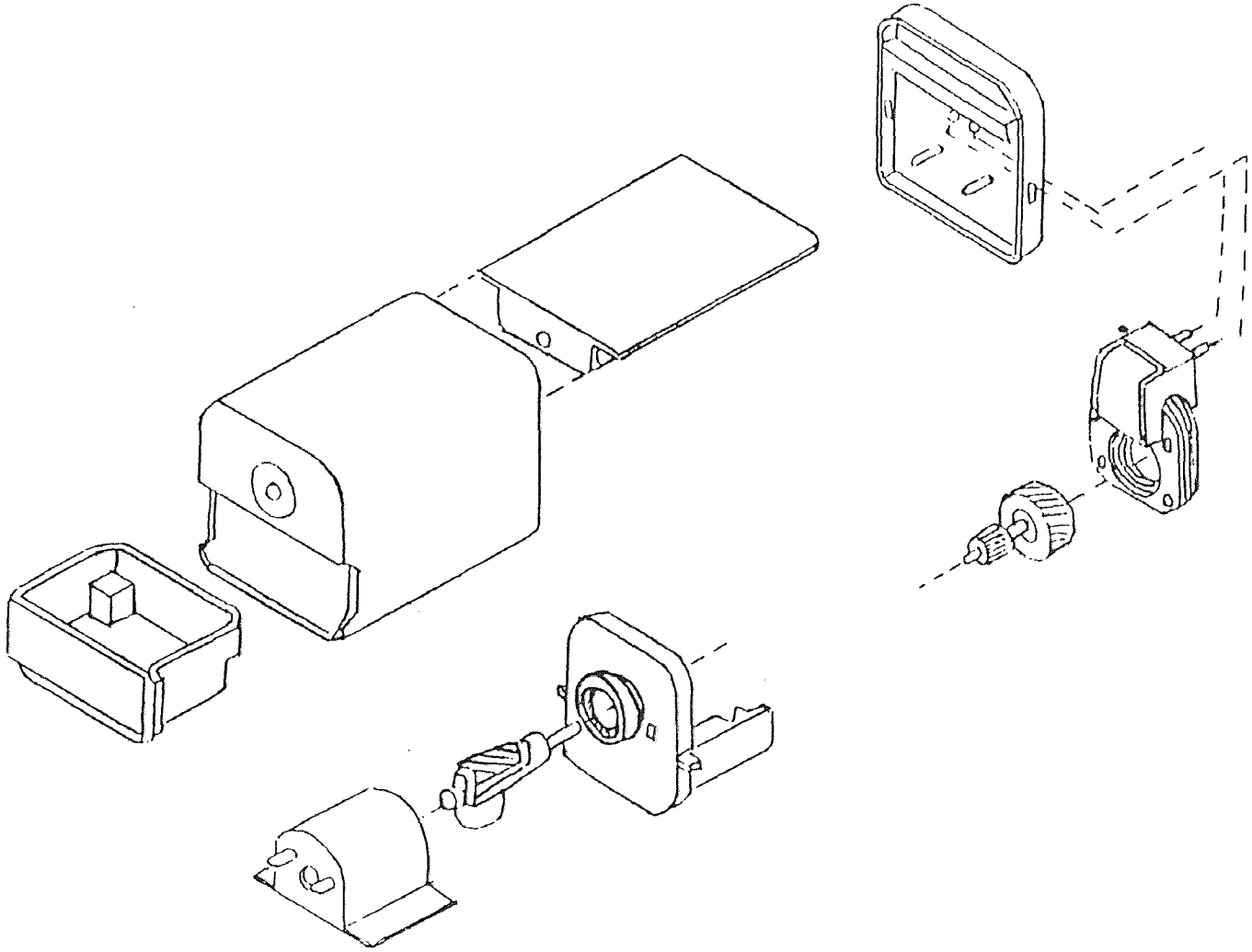

Figure 14 Complete re-designed assembly of pencil sharpener

Chapter 7

ANALYSIS OF THE PENCIL SHARPENER

7.1 ANALYSIS OF THE EXISTING DESIGN FOR MANUAL ASSEMBLY

The manual assembly of the pencil sharpener (old design) is analyzed by following the procedure for the analysis of manually assembled products proposed by Boothroyd and Dewhurst [17].

The method is used to identify the features that results in high assembly costs, and then to calculate the design efficiency is presented in the following steps.

STEP # 1: The disassembled pencil sharpener is assigned an identification number to each part, as it is removed starting with 1 for the complete assembly . The numbers are shown in the analysis chart.

STEP # 2: Referring to the design for assembly worksheet given by Boothroyd and Dewhurst is completed.

STEP # 3: Re-assembling the product is carried out, but first assembling the part with the highest identification number to the work fixture then the remaining parts are added one by one.

One row is completed for each part as shown in the figure. The first row for base part of old design of pencil sharpener is completed as follows:

Column 1: The identification number of the part, the switch is "19".

Column 2: The operation is carried out once, hence "1" is entered.

Column 3: The two digit handling process code is generated from chart 2 of Boothroyd and Dewhurst [26], "Manual handling estimated times". The code is

generated is "08" parts present no additional handling difficulties but required two hands for manipulation. The size of the switch is 18 mm. It requires no orientation so angle alpha is less than 180° and switch will be severally nest or tangle but can be grasped and lifted by one hand.

Column 4: The handling time is obtained as 4.1 seconds from chart 2 of Boothroyd & Dewhurst [26], which corresponds to the two digit code of "08".

Column 5: The assembly process code is a two digit number and it is obtained from chart 3 of figure Boothroyd & Dewhurst [26], "Manual Insertion Estimated Times". For the switch, this code is "00" as it is eassy to align and position during assembly and it is assumed hat is not secured immediately at it is the beginning of assembly.

Column 6: The insertion time 1.5 seconds is obtained from chart 3 of Manual [26], figure 13, which corresponds to the two digit code of "00".

Column 7: The total operation time in seconds is calculated by adding the handling time and insertion time in column 4 and 6 of Chart 3 of Boothroyd & Dewhurst [26], and multiplying this sum by the number of repeated operations in column (2), i.e., in the case of switch the total time entered is 5.6 seconds.

Column 8: The total operation cost in cents obtained by multiplying the operation time in column 7 by 0.4; this figure is taken as a typical operator rate in cents per seconds, and the number obtained is 2.24 cents for switch.

Column 9: The numbers in this column are entered by answering the following three questions to evaluate the minimum number of parts

1. Does the part move relative to other parts already assembled?

2. Must the part be a different material than or be isolated from all other parts already assembled? Only fundamental reasons concerned with material properties are acceptable.

3. Must the part be separate from all other parts already assembled because otherwise necessary assembly or disassembly of other parts would be impossible?

If the answer to any of these question is "YES", then a "1" is placed in column (9). In case of multiple identical operations are indicated in column (2), then the numbers of parts that must be separate is placed in column (9).

In the case of electrical switch, the answer for the above questions are:

In case of electrical switch, the answer for the above questions are:

1. NO;
2. NO;
3. YES.

Hence, "1" is entered in column (9) of chart.

By following the procedure discussed above, all the remaining parts are analyzed by using the charts provided in [3] and all the columns are filled out for the all the parts in the same fashion as it was done on electrical switch.

STEP 5: After all the rows are completed and figures in column (7) are all added, to get the total estimated manual assembly time which is 165.45 seconds for our example. The values in column (8) are added to get the total manual assembly cost which is 66.18 cents/assembly. The figures in column (9) are added to give the theoretical minimum number of parts which is "9".

STEP # 6: Finally the manual assembly design efficiency is calculated by using the equation

$EM = 3 \times NM/TM$

Where EM = manual design efficiency

NM = theoretical minimum number of parts

TM = total assembly time.

Hence, EM = 16.31

MANUAL ASSEMBLY WORKSHEET

1	2	3	4	5	6	7	8	9	Name of Assembly
part I.D. No.	number of times the operation is carried out consecutively	two-digit manual handling code	manual handing time per part	two-digit manual insertion code	manual insertion time per part	operation time, seconds (2) x [(4) + (6)]	operation cost, cents 0.4 x (7)	figures for estimation of theoretical minimum parts	
19	1	08	4.1	00	1.5	5.6	2.24	1	SWITCH
18	1	07	5.1	10	2.5	7.6	3.04	1	SHARPENING DEVICE HOUSING
17	1	37	5.85	70	5.5	11.35	4.54	1	SHARPENING DEVICE
16	1	03	1.95	10	2.5	4.45	1.78	1	DEVIDER
15	1	20	1.88	02	5.5	7.28	2.91	1	PLATE
14	2	10	1.43	02	5.5	11.88	4.75	0	SCREWS
13	1	30	1.69	02	5.5	7.19	2.87	0	FASTENER
12	1	32	2.36	02	5.5	7.86	2.97	0	SQUARE PLATE
11	1	08	4.1	72	9.5	13.6	5.44	0	GEAR BOX
10	1	68	5.25	22	6.5	11.75	4.71	1	MOTOR
						TM	CM	NM	design efficiency = $\frac{3 \times NM}{TM}$ =

©1982, 1985, 1989 Boothroyd Dewhurst, Inc.

CONTINUE ---

1	2	3	4	5	6	7	8	9	Name of Assembly
part I.D. No.	number of times the operation is carried out consecutively	two-digit manual handling code	manual handing time per part	two-digit manual insertion code	manual insertion time per part	operation time, seconds (2) x [(4) + (6)]	operation cost, cents 0.4 x (7)	figures for estimation of theoretical minimum parts	
9	1	03	1·95	02	5·5	7·45	2·98	0	SQUARE PLATE
8	2	10	1·43	02	5 5	13·86	5·54	0	SCREWS
7	1	00	1·13	02	5·5	6·63	2·65	1	BACK PLATE
6	1	20	1·88	10	2·5	4·38	1·75	0	PLUG
5	2	10	1·43	02	5·5	13·86	15·54	0	SCREWS
4	1	04	3·6	10	2·5	6·1	2·44	1	HOUSING
3	1	07	5·1	22	6·5	11·6	4·64	0	BASE-PLATE
2	2	10	1·88	10	2·5	14·38	5·75	0	SCREWS
1	1	00	1·13	00	1·5	2·63	1·05	1	PLASTIC BOX
						165·45	66·18	9	design efficiency = $\frac{3 \times NM}{TM}$ = 16·31
						TM	CM	NM	

©1982, 1985, 1989 Boothroyd Dewhurst, Inc.

7.2 ANALYSIS OF THE RE-DESIGN FOR AUTOMATIC ASSEMBLY

The completed "automatic assembly worksheet" is presented in the similar manner to that of the "manual assembly work sheet", by following the Boothroyd and Dewhurst method.[17] The required production rate is assumed to be 30 assemblies per minute, and the total production required is assumed to be 100,000 assemblies per year. The assembly design efficiency is calculated at the end of the analysis, after the chart for "automatic assembly analysis" is completed, for the re-designed pencil sharpener.

The analysis is carried out by following these steps:

Step 1: The assembly is taken apart and an identification number is assigned to each part, the complete assembly is given number "1", and the parts are numbered in the order of disassembly. Attached charts shows the parts and their ID numbers.

STEP 2: Re-assembly of the product is done beginning with the part with the highest identification number. All the rows of the work sheet for automatic assembly are taken from Boothroyd & Dewhurst [17], are completed for all the parts. The first row of the work sheet for the electrical switch is completed in the following way:

Column 1: The ID number of the parts, for the switch is "11".

Column 2: The operation is carried out once. Hence "1" is entered here.

Column 3: The part feeding and orienting code is determined for the part using charts 4 to 7 of Boothroyd & Dewhurst [17].

For switch, this code is entered as "60063". From Chart 4 of Boothroyd & Dewhurst [26], the first digit is obtained, this is taken as '6' because the rubber part is a non-rotational part, and it is considered to be a flat part, as the ration between the length of the longest side (A=18mm), and the length of the

intermediate side (B=16mm) is less than '3', and the ration between the length of the longest side (A=18) and the length of the shortest side (C=3mm) is greater than 4.

The next two digits in the code are taken to "00" from chart 6, of Boothroyd & Dewhurst [17]. As the condition A>1.1B and B>1.1C are satisfied for the switch and also the part has 180 degrees symmetry about all three axis.

The last tow digits in the code are entered as "63". These are obtained from chart '7', because the electrical switch is small and non-abrasive, tangle or nest but not severely, light, non-sticky, delicate, non-flexible, and tend to overlap during feeding.

Column 4: Operating efficiency is obtained from chart 6 of Boothroyd & Dewhurst [26], as 0.8 corresponds to "600" of the five digit code.

Column 5: Relative feeder cost for switch is 7 cents. It is obtained by adding the feeding cost (FC) and additional feeder cost (DC).

Column 6: The size of electrical switch is 18 mm and so the maximum feed rate from a standard feed rate is given by

FM = 1500 x .9/18 = 75 parts/minute

Column 7: The assembly rate required is 30 assembly/minute, i.e., FR = 30, since this required rate is less than FM, the difficulty rating for automatic handling is given by,

DF = 60/FRxCR

DF (for electrical switch) = 60/30x7 = 5.6

Column 8: The cost of feeding and orienting each electrical switch is CF = .3xDF = .168 cents.

Column 9: The appropriate two digit code obtained from chart '8' of Boothroyd & Dewhurst [17], is "20" for switch, because the part is added but not secured after it is assembled as this is beginning of the assembly. It is inserted from vertically

above, there is no screwing operation or plastic deformation, easy to align and position. Similarly the two digit codes are generated using the same chart for other parts also.

Column 10: The relative workhead cost from chart 8 is, WC = 2 cents.

Column 11: FR = 30, and difficulty rating for automatic insertion is DI = 60 x WC/FR = 4.

Column 12: The cost of insertion for switch, CI = .06 x DI = .24 cents.

Column 13: The total operation cost for feeding and orienting the electrical switch is the sum of the separate costs per part for these two operations (Column 8 and 12), multiplied by the number of simultaneous operations, i.e., (2)x[(8) + (12)], where the numbers in the parentheses refer to the data in these columns. In this case, the total cost obtained is .408 cents. Same calculation is done for the other pars, and the values are entered in this column.

Column 14: The theoretical minimum number of parts is already calculated, and all the parts in the new design is separate. Hence '1' is entered in each row.

STEP 3: The data is entered for all the other parts, following the same procedure and using charts, until the final assembly operation has been performed.

STEP 4: The numbers in column 13 and 14 are added to get the total cost of automatic handling and insertion CA and the theoretical minimum number of parts NM. For this pencil sharpener

CA = 3.63 cents and NM = 10.

STEP 5: The estimated design efficiency for automatic assembly, using the formula 0.09 x NM/CA, is .2479 or 24.79 percent.

DESIGN FOR MANUAL ASSEMBLY WORKSHEET

1	2	3	4	5	6	7	8	9	Name of Assembly
part I.D. No.	number of times the operation is carried out consecutively	two-digit manual handling code	manual handing time per part	two-digit manual insertion code	manual insertion time per part	operation time, seconds (2) x [(4) + (6)]	operation cost, cents 0.4 x (7)	figures for estimation of theoretical minimum parts	MANUAL ASSEMBLY OF PENCIL SHARPENER (RE-DESIGNED)
10	1	08	4·1	00	1·5	5·6	2·24	1	SWITCH
9	1	07	5·1	10	2·5	7·6	3·04	1	HOUSING
8	1	37	5·85	70	5·5	11·35	4·54	1	SHARPENING DEVICE
7	1	03	1·95	10	2·5	4·45	1·78	1	DIVIDER
6	1	30	1·69	02	5·5	7·19	2·87	1	CONNECTOR
5	1	68	5·25	22	6·5	11·75	4·7	1	MOTOR ASSEMBLY
4	1	30	1·69	00	1·5	3·19	1·27	1	PCB ASSEMBLY
3	1	04	3·6	10	2·5	6·1	2·44	1	BOX HOUSING
2	1	00	1·13	02	5·5	6·63	2·65	1	END PLATE
1	1	00	1·13	02	1·5	2·63	1·05	1	COLLECTOR BOX
						66·49	26·60	10	design efficiency = $\frac{3 \times NM}{TM}$ = 45·11%
						TM	CM	NM	

©1982, 1985, 1989 Boothroyd Dewhurst, Inc.

DESIGN FOR AUTOMATIC ASSEMBLY WORKSHEET

required rate of assembly FR (per minute): 60

Name of Assembly: AUTOMATIC ASSEMBLY OF PENCIL SHARPENER

1	2	3	4	5	6	7	8	9	10	11	12	13	14	
part I.D. No	number of times operation is carried out simultaneously	five-digit automatic handling code	orienting efficiency, OE	relative feeder cost, CR = FC ÷ DC	maximum basic feed rate FM	difficulty rating for automatic handling, DF	cost of automatic handling per part, CF = 0.03 x DF	two-digit automatic insertion code	relative workhead cost, WC	difficulty rating for automatic insertion DI	cost of automatic insertion per part, CI = 0.03 x DI	operation cost, cents (2) x [(8) + (12)]	figures for estimation of theoretical minimum parts	
10	1	60063	·8	7	75	5·6	·168	20	2	4	·24	·408	1	SWITCH
9	1	87620	·5	4	25·71	9·33	·28	30	1·2	2·4	·144	·424	1	HOUSING
8	1	20020	·9	3	50	3·6	·108	20	2	4	·24	·348	1	SHARPENING DEVICE
7	1	65420	·15	3·5	26·1	8·04	·241	11	1·6	3·2	·192	·433	1	DEVIDER
6	1	60020	·5	3	72·3	2·48	·07	00	1	2·0	·12	·19	1	CONNECTOR
5	1	10012	·7	3	64·2	2·80	·084	26	2·7	5·4	·324	·408	1	MOTOR ASSEMBLY
4	1	60020	·8	3	35·70	5·04	·151	00	1·0	2·0	·12	·271	1	PCB ASSEMBLY
3	1	80020	·6	3	13·84	13·00	·39	06	1·3	2·6	·156	·546	1	BOX HOUSING
2	1	60020	·8	3	34·07	5·28	·1584	30	1·2	2·4	·144	·302	1	END PLATE
1	1	80020	·6	3	30·0	6·00	·18	00	1·0	2·0	1·2	·30	1	COLLECTOR BOX
												3·63	10	
												CA	NM	

Column 6: $FM = 1500 \times \frac{OE}{Y}$; Y = part size

Column 7: $DF = \frac{60}{FR} \times CR$ if $FR \le FM$; $DF = \frac{60}{FM} \times CR$ if $FR \ge FM$

Column 11: $DI = \frac{60}{FR} \times WC$ if $FR \le 60$; $DI = WC$ if $FR \ge 60$

Efficiency $= \frac{.09 \times NM}{CA} = 24.79\%$

AUTOMATIC HANDLING

FIRST DIGIT

ROTATIONAL (1)	DISCS L/D < 0.8 (2)	0
	SHORT CYLINDERS 0.8 ≤ L/D ≤ 1.5 (2)	1
	LONG CYLINDERS L/D > 1.5 (2)	2
NON-ROTATIONAL	FLAT A/B ≤ 3 A/C > 4 (3)	6
	LONG A/B > 3 (3)	7
	CUBIC A/B ≤ 3 A/C ≤ 4 (3)	8

AUTOMATIC HANDLING-DATA FOR NON—ROTATIONAL PARTS
(first digit 6, 7 or 8)

Key

first digit	OE	FC
6	0.7	1
7	0.45	1.5
8	0.3	2

			A ≤ 1.1B or B ≤ 1.1C (code the main feature or features which distinguish the adjacent surfaces having similar dimensions)							
		A > 1.1B and B > 1.1C	steps or chamfers (2) parallel to —			through grooves (2) parallel to —			holes or recesses > 0.1B (cannot be seen in silhouette)	other - including slight asymmetry (3), features too small etc
			X axis and > 0.1C	Y axis and > 0.1C	Z axis and > 0.1B	X axis and > 0.1C	Y axis and > 0.1C	Z axis and > 0.1B		
		0	1	2	3	4	5	6	7	8
part has 180° symmetry about all three axes (1)	0	0.8 1 0.9 1 0.6 1	0.8 1 0.9 1 0.5 1	0.2 1 0.5 2 0.15 2	0.5 1 0.5 1.5 0.15 1.5	0.75 1 0.5 1 0.5 1	0.25 1 0.5 1.5 0.15 1	0.5 1.5 0.6 1 0.15 1.5	0.25 2 0.5 1 0.15 2	MANUAL HANDLING REQUIRED

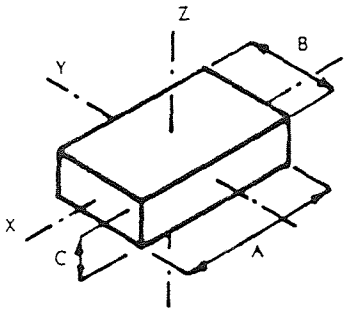

			code the main feature or if orientation is defined by more than one feature, then code the feature that gives the largest third digit							
			steps or chamfers (2) parallel to -			through grooves (2) parallel to -			holes or recesses > 0.1B (cannot be seen in silhouette)	other - including slight asymmetry (3), features too small etc
			X axis and > 0.1C	Y axis and > 0.1C	Z axis and > 0.1B	X axis and > 0.1C	Y axis and > 0.1C	Z axis and > 0.1B		
			0	1	2	3	4	5	6	7
part has 180° symmetry about one axis only (1)	about X axis	1	0.4 1 0.5 1 0.4 1	0.6 1 0.15 1 0.6 1	0.4 1.5 0.25 2 0.4 2	0.4 1 0.5 1 0.2 1	0.3 1 0.25 1 0.3 1	0.7 1 0.25 1.5 0.15 1	0.4 2 0.25 3 0.1 2	MANUAL HANDLING REQUIRED
	about Y axis	2	0.4 1 0.4 1 0.5 1	0.3 1 0.2 1 0.15 1	0.4 1.5 0.25 2 0.5 2	0.5 1 0.4 1 0.2 1	0.3 1 0.25 1 0.15 1	0.4 1 0.25 1 0.15 2	0.4 2 0.25 2 0.15 2	
	about Z axis	3	0.4 1 0.3 1 0.4 1	0.3 1 0.2 1 0.2 1	0.4 1.5 0.25 2 0.4 2	0.4 1 0.3 1 0.2 1	0.3 1 0.25 1 0.15 1	0.4 1.5 0.25 2 0.15 2	0.4 2 0.25 2 0.15 2	
part has no symmetry (code the main feature(s) that define the orientation) (4)	orientation defined by one main feature	4	0.25 1 0.25 1 0.15 1	0.15 1 0.1 1.5 0.14 1	0.15 1.5 0.24 2 0.15 1	0.1 1 0.2 1 0.1 1	0.15 1 0.1 1.5 0.05 1	0.1 1.5 0.15 2 0.1 1.5	0.1 2 0.15 3 0.08 2	
	orientation defined by two main features and one is a step, chamfer or groove	6	0.2 2 0.1 3 0.05 2	0.15 2 0.1 3.5 0.05 2	0.1 2.5 0.1 4 0.05 2.5	0.1 2 0.1 3 0.05 2	0.15 2 0.1 3.5 0.05 2	0.1 2.5 0.1 4 0.05 2.5	0.1 3 0.1 5 0.05 3	
	other - including slight asymmetry (3) etc.	9	MANUAL HANDLING REQUIRED							

©1982, 1985, 1989 Boothroyd Dewhurst, Inc.

CHART 4-3

AUTOMATIC HANDLING-DATA FOR ROTATIONAL PARTS (first digit 0, 1 or 2)

KEY OF FC

first digit	OF	FC
0	0.3	1
1	0.15	1.5
2	0.45	1.5

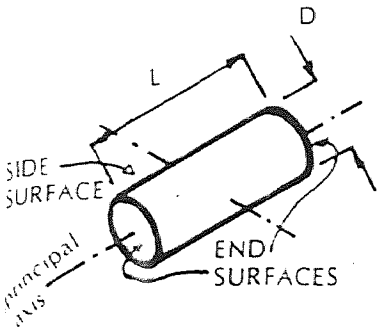

		part is symmetrical about its principal axis (BETA symmetric) (see note 2)	part is not BETA symmetric (code the main feature or features requiring orientation about the principal axis)							
			BETA asymmetric projections, steps, or chamfers (can be seen in silhouette)			BETA asymmetric grooves or flats (can be seen in silhouette)				slightly asymmetric or small features less than D/10 and L/10 OR holes or recesses which cannot be seen in outer shape of silhouette
			on side surface only	on end surface(s) only	on both side and end surface(s)	through groove or flat can be seen in end view	through groove can be seen in side view: on end surface	through groove can be seen in side view: on side surface		
		0	2	3	4	5	6	7		8
part is ALPHA symmetric (see note 1)	0	0.7 1 0.7 1 0.9 1	0.3 1 0.15 1 0.45 1	0.5 1 0.2 1 0.9 2	0.3 1 0.15 1 0.45 1	0.35 1 0.2 1 0.9 1	0.2 1 0.2 1 0.9 2	0.5 1 0.2 1 0.9 2		
part is not ALPHA symmetric (code the main feature or features requiring end to-end orientation) (see note 1): part can be fed in a slot supported by large end or protruding flange with center of mass below supporting surfaces	1	0.4 1 0.3 1 0.9 1	0.2 1 0.1 1 0.45 1	0.25 1 0.1 1 0.9 2	0.2 1 0.1 1 0.45 1	0.2 1 0.1 1 0.9 1	0.1 1 0.1 1 0.9 2	0.25 1 0.1 1 0.9 2		
BETA symmetric steps or chamfers on external surfaces (see note 3)	2	0.4 1 0.3 1 0.75 1	0.15 1 0.1 1.5 0.37 1.5	0.25 1 0.1 1.5 0.25 3	0.15 1 0.1 1.5 0.37 1.5	0.35 1 0.2 1.5 0.5 1	0.1 1 0.05 1.5 0.5 3	0.25 1 0.1 1.5 0.5 2		
BETA symmetric grooves holes or recesses (see note 3): on both side and end surface(s)	3	0.5 1 0.2 1 0.85 1	0.15 1 0.1 1.5 0.43 1.5	0.25 1 0.1 1.5 0.25 2	0.15 1 0.1 1.5 0.43 1.5	0.2 1 0.1 1.5 0.5 1	0.1 1 0.05 1.5 0.5 2	0.25 1 0.1 1.5 0.5 2		—MANUAL HANDLING REQUIRED—
BETA symmetric grooves holes or recesses (see note 3): on side surface only	4	0.5 1 0.1 1 0.85 1	0.15 1 0.1 1.5 0.43 1.5	0.25 1 0.1 1.5 0.25 2	0.15 1 0.1 1.5 0.43 1.5	0.2 1 0.1 1.5 0.5 1	0.1 1 0.05 1.5 0.5 2	0.25 1 0.1 1.5 0.5 2		
BETA symmetric grooves holes or recesses (see note 3): on end surface(s) only	5	0.5 1 0.2 1 0.6 1	0.15 1 0.1 1.5 0.27 1.5	0.25 1 0.1 1.5 0.25 2	0.15 1 0.1 1.5 0.27 1.5	0.2 1 0.1 1.5 0.45 1	0.1 1 0.05 1.5 0.45 2	0.25 1 0.1 1.5 0.45 2		
BETA symmetric hidden features with no corresponding exposed features (see note 4)	6	0.6 1	0.27 1.5	0.25 2	0.27 1.5	0.45 1	0.45 2	0.45 2		
BETA asymmetric features on side or end surface(s)	7		0.27 2	0.25 1 0.1 1.5 0.25 3	0.1 1 0.05 1.5 0.27 2	0.1 3	0.1 1 0.05 1.5 0.5 3	0.25 1 0.1 1.5 0.5 3		
slightly asymmetric or small features; amount of asymmetry or feature size less than D/10 and L/10	8	—MANUAL HANDLING REQUIRED—								

982, 1985, 1989 Boothroyd Dewhurst, Inc.

CHART 4-2

MANUAL INSERTION — ESTIMATED TIMES (seconds)

Key:

PART ADDED but NOT SECURED

PART SECURED IMMEDIATELY

SEPARATE OPERATION

		after assembly no holding down required to maintain orientation and location (3)				holding down required during subsequent processes to maintain orientation or location (3)			
		easy to align and position during assembly (4)		not easy to align or position during assembly		easy to align and position during assembly (4)		not easy to align or position during assembly	
		no resistance to insertion	resistance to insertion (5)	no resistance to insertion	resistance to insertion (5)	no resistance to insertion	resistance to insertion (5)	no resistance to insertion	resistance to insertion (5)
		0	1	2	3	6	7	8	9
addition of any part (1) where neither the part itself nor any other part is finally secured immediately: part and associated tool (including hands) can easily reach the desired location	0	1.5	2.5	2.5	3.5	5.5	6.5	6.5	7.5
addition of any part (1) where neither the part itself nor any other part is finally secured immediately: part and associated tool (including hands) cannot easily reach the desired location: due to obstructed access or restricted vision (2)	1	4	5	5	6	8	9	9	10
addition of any part (1) where neither the part itself nor any other part is finally secured immediately: part and associated tool (including hands) cannot easily reach the desired location: due to obstructed access and restricted vision (2)	2	5.5	6.5	6.5	7.5	9.5	10.5	10.5	11.5

		no screwing operation or plastic deformation immediately after insertion (snap/press fits, circlips, spire nuts, etc.)		plastic deformation immediately after insertion						screw tightening immediately after insertion (6)	
				plastic bending or torsion			rivetting or similar operation				
				easy to align and position during assembly (4)	not easy to align or position during assembly		easy to align and position during assembly (4)	not easy to align or position during assembly			
		easy to align and position with no resistance to insertion (4)	not easy to align or position during assembly and/or resistance to insertion (5)		no resistance to insertion	resistance to insertion (5)		no resistance to insertion	resistance to insertion (5)	easy to align and position with no torsional resistance (4)	not easy to align or position and/or torsional resistance (5)
		0	1	2	3	4	5	6	7	8	9
addition of any part (1) where the part itself and/or other parts are being finally secured immediately: part and associated tool (including hands) can easily reach the desired location and the tool can be operated easily	3	2	5	4	5	6	7	8	9	6	8
addition of any part (1) where the part itself and/or other parts are being finally secured immediately: part and associated tool (including hands) cannot easily reach desired location or tool cannot be operated easily: due to obstructed access or restricted vision (2)	4	4.5	7.5	6.5	7.5	8.5	9.5	10.5	11.5	8.5	10.5
addition of any part (1) where the part itself and/or other parts are being finally secured immediately: part and associated tool (including hands) cannot easily reach desired location or tool cannot be operated easily: due to obstructed access and restricted vision (2)	5	6	9	8	9	10	11	12	13	10	12

		mechanical fastening processes (part(s) already in place but not secured immediately after insertion)				non-mechanical fastening processes (part(s) already in place but not secured immediately after insertion)				non-fastening processes	
		none or localized plastic deformation				metallurgical processes					
							additional material required				
		bending or similar processes	rivetting or similar processes	screw tightening (6) or other processes	snap fit, snap clip, press fit, etc.	no additional material required (e.g. resistance, friction welding, etc.)	soldering processes	weld/braze processes	chemical processes (e.g. adhesive bonding, etc.)	manipulation of parts or sub-assembly (e.g. orienting, fitting or adjustment of part(s), etc.)	other processes (e.g. liquid insertion, etc.)
		0	1	2	3	4	5	6	7	8	9
assembly processes where all solid parts are in place	9	4	7	5	3.5	7	8	12	12	9	12

©1982, 1985, 1989 Boothroyd Dewhurst, Inc.

CHART 2-2

MANUAL HANDLING—ESTIMATED TIMES (seconds)

Key:

ONE HAND

parts can be grasped and manipulated by one hand without the aid of grasping tools		parts are easy to grasp and manipulate					parts present handling difficulties (1)				
		thickness > 2 mm			thickness ≤ 2 mm		thickness > 2 mm			thickness ≤ 2 mm	
		size >15 mm	6 mm ≤ size ≤15 mm	size <6 mm	size >6 mm	size ≤6 mm	size >15 mm	6 mm ≤ size ≤15 mm	size <6 mm	size >6 mm	size ≤6 mm
		0	1	2	3	4	5	6	7	8	9
$(\alpha+\beta) < 360°$	0	1.13	1.43	1.88	1.69	2.18	1.84	2.17	2.65	2.45	2.98
$360° \le (\alpha+\beta) < 540°$	1	1.5	1.8	2.25	2.06	2.55	2.25	2.57	3.06	3	3.38
$540° \le (\alpha+\beta) < 720°$	2	1.8	2.1	2.55	2.36	2.85	2.57	2.9	3.38	3.18	3.7
$(\alpha+\beta) = 720°$	3	1.95	2.25	2.7	2.51	3	2.73	3.06	3.55	3.34	4

ONE HAND with GRASPING AIDS

parts can be grasped and manipulated by one hand but only with the use of grasping tools			parts need tweezers for grasping and manipulation								parts need standard tools other than tweezers	parts need special tools for grasping and manipulation
			parts can be manipulated without optical magnification				parts require optical magnification for manipulation					
			parts are easy to grasp and manipulate		parts present handling difficulties (1)		parts are easy to grasp and manipulate		parts present handling difficulties (1)			
			thickness > 0.25 mm	thickness ≤ 0.25 mm	thickness > 0.25 mm	thickness ≤ 0.25 mm	thickness > 0.25 mm	thickness ≤ 0.25 mm	thickness > 0.25 mm	thickness ≤ 0.25 mm		
			0	1	2	3	4	5	6	7	8	9
$\alpha \le 180°$	$0 \le \beta \le 180°$	4	3.6	6.85	4.35	7.6	5.6	8.35	6.35	8.6	7	7
$\alpha \le 180°$	$\beta = 360°$	5	4	7.25	4.75	8	6	8.75	6.75	9	8	8
$\alpha = 360°$	$0 \le \beta \le 180°$	6	4.8	8.05	5.55	8.8	6.8	9.55	7.55	9.8	8	9
$\alpha = 360°$	$\beta = 360°$	7	5.1	8.35	5.85	9.1	7.1	9.55	7.85	10.1	9	10

TWO HANDS for MANIPULATION

		parts present no additional handling difficulties					parts present additional handling difficulties (e.g. sticky, delicate, slippery, etc.) (1)				
		$\alpha \le 180°$			$\alpha = 360°$		$\alpha \le 180°$			$\alpha = 360°$	
		size > 15 mm	6 mm ≤ size ≤ 15 mm	size < 6 mm	size > 6 mm	size ≤ 6 mm	size > 15 mm	6 mm ≤ size ≤ 15 mm	size < 6 mm	size > 6 mm	size ≤ 6 mm
		0	1	2	3	4	5	6	7	8	9
parts severely nest or tangle or are flexible but can be grasped and lifted by one hand (with the use of grasping tools if necessary) (2)	8	4.1	4.5	5.1	5.6	6.75	5	5.25	5.85	6.35	7

TWO HANDS required for LARGE SIZE

		parts can be handled by one person without mechanical assistance									
		parts do not severely nest or tangle and are not flexible								parts severely nest or tangle or are flexible (2)	parts need special tools for grasping and manipulation
		part weight < 10 lb				parts are heavy (> 10 lb)					
		parts are easy to grasp and manipulate		parts present other handling difficulties (1)		parts are easy to grasp and manipulate		parts present other handling difficulties (1)			
		$\alpha \le 180°$	$\alpha = 360°$	$\alpha \le 180°$	$\alpha = 360°$	$\alpha \le 180°$	$\alpha = 360°$	$\alpha \le 180°$	$\alpha = 360°$		
		0	1	2	3	4	5	6	7	8	9
two hands required for grasping and transporting parts	9	2	3	2	3	3	4	4	5	7	9

©1982, 1986, 1989 Boothroyd Dewhurst, Inc.

AUTOMATIC HANDLING-ADDITIONAL FEEDER COSTS, DC

FIGURES TO BE ADDED TO FC, OBTAINED FROM CHARTS 4-2 or 4-3					parts will not tangle or nest				tangle or nest but not severely				severely nest	severely tangle
					not light		light		not light		light			
					not sticky	sticky	not sticky	sticky	not sticky	sticky	not sticky	sticky		
					0	1	2	3	4	5	6	7	8	9
parts are small and non abrasive	parts do not tend to overlap during feeding	not delicate	non-flexible	0	0	1	2	3	2	3	3	4	MANUAL HANDLING REQUIRED	
			flexible	1	2	3	4	5	4	5	5	6		
		delicate	non-flexible	2	1	2	3	4	3	4	4	5		
			flexible	3	3	4	5	6	5	6	6	7		
	parts tend to overlap during feeding	not delicate	non-flexible	4	2	3	3	4	4	5	4	5		
			flexible	5	4	5	5	6	6	7	6	7		
		delicate	non-flexible	6	3	4	4	5	5	6	5	6		
			flexible	7	5	6	6	7	7	8	7	8		

		very small parts					large parts				
		rotational		non-rotational			rotational		non-rotational		
		L/D ≤ 1.5	L/D > 1.5	A/B ≤ 3 A/C > 4	A/B > 3	A/B ≤ 3 A/C ≤ 4	L/D ≤ 1.5	L/D > 1.5	A/B ≤ 3 A/C > 4	A/B > 3	A/B ≤ 3 A/C ≤ 4
		0	1	2	3	4	5	6	7	8	9
parts are very small or large but are nonabrasive	8	2	2	2	2	2	9	9	9	9	9

		parts will not severely tangle or nest									severely tangle or nest
		small parts					large parts		very small parts		
		orientation defined by geometric features			orientation defined by non-geometric features		orientation defined by geometric features	orientation defined by non geometric features	orientation defined by geometric features	orientation defined by non geometric features	
		non-flexible		flexible	do not overlap	overlap					
		do not overlap	overlap								
		0	1	2	3	4	5	6	7	8	9
abrasive parts	9	2	4	4			9		4		

©1982, 1985, 1989 Boothroyd Dewhurst, Inc.

CHART 4-4

AUTOMATIC INSERTION-RELATIVE WORKHEAD COST, WC

Key

PART ADDED but NOT SECURED

			after assembly no holding down required to maintain orientation and location (5)				holding down required during subsequent process(es) to maintain orientation and location (5)			
			easy to align and position (6)		not easy to align or position (no features provided for the purpose)		easy to align and position (6)		not easy to align or position (no features provided for the purpose)	
			no resistance to insertion	resistance to insertion (7)	no resistance to insertion	resistance to insertion (7)	no resistance to insertion	resistance to insertion (7)	no resistance to insertion	resistance to insertion (7)
			0	1	2	3	6	7	8	9
no final securing is taking place (2)	straight line insertion	from vertically above	0	1	1.5	1.5	2.3	1.3	2	2	3
			1	1.2	1.6	1.6	2.5	1.6	2.1	2.1	3.3
		not from vertically above (3)	2	2	3	3	4.6	2.7	4	4	6.1
	insertion not straight line motion (4)										

PART SECURED IMMEDIATELY

			no screwing operation or plastic deformation immediately after insertion (snap or press fits, etc.)		plastic deformation immediately after insertion						screwing immediately after insertion	
					plastic bending			rivetting or similar plastic deformation				
					easy to align and position (6)	not easy to align or position (no features provided for the purpose)		easy to align and position (6)	not easy to align or position (no features provided for the purpose)			
			easy to align and position (6) no resistance to insertion	not easy to align or position and/or resistance to insertion		no resistance to insertion	resistance to insertion (7)		no resistance to insertion	resistance to insertion (7)	easy to align and position (6) no resistance to screwing	not easy to align or position and/or resistance to screwing (7)
			0	1	2	3	4	5	6	7	8	9
final securing is taking place	straight line insertion	from vertically above	3	1.2	1.9	1.6	2.4	3.6	0.9	1.4	2.1	0.8	1.8
		not from vertically above (3)	4	1.3	2.1	2.1	3.2	4.8	1	1.5	2.3	1.3	2
	insertion not straight line motion (4)		5	2.4	3.8	3.2	4.8	7.2	1.8	2.8	4.2	1.6	3.6

SEPARATE OPERATION

			mechanical fastening processes (parts already in place)				non-mechanical fastening processes (parts already in place)				non-fastening processes	
			none or localized plastic deformation				metallurgical processes					
								additional material required				
			bending or similar processes	rivetting or similar processes	screwing or other processes	Snap fit, snap clip, press fit, etc.	no addition of material (friction or resistance welding, etc.)	soldering processes	welding or brazing	chemical processes (adhesive bonding etc.)	manipulation of parts or sub-assembly (orientating, fitting, adjustment etc.)	other processes (liquid insertion etc.)
			0	1	2	3	4	5	6	7	8	9
assembly process where all solid parts are in place or non-solids added or parts are manipulated		9	1.6	0.9	0.8	1.6	1.2	1.1	1.1	0.8	1.5	

1982, 1985, 1989 Boothroyd Dewhurst, Inc.

CHART 4-5

CHAPTER 8

ASSEMBLY SEQUENCE PLANNING

Sequence of assembly of a set of parts plays a key role in determining important characteristics of the tasks in assembly and of the finished assembly. Parts are designed and made to meet the specifications, and then are assembled to configuration that will fulfills the functions of the final product. Matters, such as the difficulty of assembly steps, the needs for fixturing, the potential for parts damage during assembly, the ability to do in-process testing, the occurrence of need for rework, and the unit cost of assembly, are all affected by the assembly sequence choice.[19, 20, 21, 22]

8.1 DETERMINATION OF ASSEMBLY SEQUENCE

Exploring the choices of assembly sequence is very difficult for two reason. First, the number of valid sequence can be large even at small number of parts and rise very high with increasing parts count. Second, seemingly minor design changes can drastically modify the available choices of assembly sequence.

Assembly sequence studies require identification of potential jigging and gripping surface, grip and assembly forces, clearances and tolerances. Basically there are five reasons for seeking good assembly sequence

(1) Construction: Construction reasons such as access to fasteners or lubrication points plays important role in determining the sequences.

(2) Ease of assembly: Some sequence may include some tricky part mates whose success may be doubtful or whose failure might damage some parts.

(3) Quality Control: Ability to test the function of sub-assembly or the avoidance of a sequence that installs fragile parts easily in the process. Some sequences

might not offer the opportunity to test some function until it is buried beneath many other parts.

(4) Process: Some sequence may not allow a part to be jigged or gripped from an accurately made surface. This makes assembly's success doubtful. Some sequences may require many counterproductive moves such as fixture or tool changes or the need to change sub-assembly over. This change-overs may not avoidable, but sequences may require flipping before the sub-assembly is fully fastened together, risking the possibility that it will disassemble spontaneously unless extra fixtures are provided. Thus sequence without flips and change-over may be the prime goal of good sequencing operation.

(5) Production strategy: Some sub-assembly can be used in many product so it is advisable to stock such sub-assembly so that final assembly operation can be done very fast on the remaining parts.

8.2 APPROACHES FOR GENERATION OF ASSEMBLY SEQUNCES:

Generally, techniques for exploring the choices of assembly sequences have been informal and incomplete. Means of generating all assembly sequence is from the records of an exhaustive set of trials involving either all ways of assembling the component parts into sub-assemblies and assemblies or all the ways of removing component parts from assembly and each of its sub-assemblies. [1, 7]

Another systematic approach for generating all physically possible assembly sequences can be used to generate the possible assembly sequences is based on the work of Thomas De Fazio and Daniel E. Whitney.[23] This approach is used in the sequencing of assembly for pencil sharpener. This algorithmic approach introduces a hierarchy of feasibility condition to reduce the complexity of the geometric and physical reasoning that must be carried out for

sequence generation. According to this approach, introduction contained in a part list and an assembly drawing to characterize the assembly by a network, wherein nodes represents parts and lines between the nodes represents any of certain user-defined relations between parts called "liaisons". User accepted definitions of "liaisons" means "a close bond or connection" and generally include physical contact between parts. After assembly is characterized by a networks of nodes (parts) and lines (liaisons), names are associated with two sets of element, for example, parts names with the nodes and liaison numbers with lines. Subsequently, any assembly step is characterized by the establishment of one or more of the liaisons of the assembly. This method does not precisely create assembly sequences but rather creates liaison sequences. Instead, parts liaisons are used in each sequence. Sequences are generated by answering the following two questions for each liaison. According to De Fazio and Whitney, the number of liaisons is related to number of parts by:

$$(N^2 - N)/2 > l > (N-1)$$

Where N = number of parts,

l = number of liaisons.

Hence for pencil sharpener, for N = 10 parts, there are between 9 to 45 questions. Each of the following questions are addressed to each of the liaisons.

Q1: What liaisons must be done prior to doing liaison i?

Q2: What liaisons must be left to be done after doing liaison i?

Answers are in the form of precedence relations between liaisons and/or logical combinations or liaisons. Liaison sequences are directly generated from the answers. The starting state is that of disassembly with no parts is assembled. Here "state" refers to the state of establishment of liaisons. An explicit list of which liaisons are and which are not established represents the

state of assembly. Assembly proceeds from state to state by adding a part or a subassembly to another part or subassembly until all liaisons are established. The imaginary path associated with the attachment of a part or subassembly is called an assembly state transition or a "state transition". Each state may be represented by a box with a list of numbers representing established liaisons, and state transitions may be represented as lines connecting boxes. The starting state is represented as a box with no entries.

To generate liaison sequence, begin by scanning the liaison list and the answers for those liaisons which are not precedented. Any of these may serve the first liaison to be established. Line up representations of each first possible state across a rank and connect each with the starting state by line. For each possible first liaison , one explores for all possible subsequent states, by again scanning the liaison list, the precedence relations (answers) and any other constraints imposed on the assembly, thus generating another rank. It will be convenient to show no state more than once, so if it occurs that there are two or three ways of getting to a state in the second rank, its representation will have two or three state transition (lines) entering it. In this fashion one precedes algorithmically to the finish state where all liaisons have been established.

Naming the ranks ordinally, zeroth for the unassembled starting state, first for the prospective first liaison, and so forth, one sees that there are as many ranks as parts. Since $l > (N-1)$, one sees that a single liaison is necessary established per state transition only for assemblies where $l = (N-1)$. for those assemblies where $l > (N-1)$ some state transitions involve establishing two or more liaisons. Once can consider that a state transition involves placing a part or a subassembly, but the bookkeeping is not by part name but by liaison number. However, it is already known that parts count and liaison count can differ by more than one. Another manifestation of the same matter is noted on the liaison

diagram where closed figures may occur with parts at the vertices. If a last parts is placed in a set that makes a closed figure, two liaisons (lines) are established. If a part placement closes two figures, three liaisons are established in the state transition, and so forth.

In the case of pencil sharpener, there are ten parts. The list of the parts is given below:

1) Switch

2) Housing

3) Sharpening Device

4) Divider

5) Connector

6) Motor Assembly

7) PCB Assembly

8) Housing Box

9) End Plate

10) Collector

The liaison diagram is shown in the figure.

The liaison diagram is the first step to generating the family of liaisons or assembly sequences. The next step will be to answer the two questions above mentioned.

Q1) What liaison must be done prior to doing liaison (i)?

For i = 1: Nothing precedes switch to assembly.

For i = 2: Liaison 1 must be done before sharpening assembly is fixed. the reason behind this is that after sharpening device is fixed we cannot put switch in housing.

Therefore 1 ---> 2

For i = 3: L1 must be done before Divider is fixed.

Therefore 1 ---> 3

If we combine above relationship, we will get

1 ---> (2 and 3)

Comments: Liaison 1 need not precedes Liaison 2, and Liaison 1 need not precedes Liaison 3, but Liaison 1 must precedes conjuction (and) of Liaison 2 and Liaison 3, meaning that Liaison 1 must be established before Liaison 2 and Liaison 3.

i = 4: Connector cannot be inserted before the completion of Divider.

Therefore (1 and 2 and 3) ---> 4.

i = 5: Nothing precedes motor. However Liaison 5 must precedes L4.

Therefore 5 ---> 4.

Comments: This relationship is stronger than the immediate previous relationship. Thus writing this relationship implies previous one, which no longer need be written.

i = 6: L6 must be done after motor assembly is connected to connector.

Therefore (1 and 2 and 3 and 4 and 5) ---> 6

i = 7: After Liaison L6, PCB assembly must be inserted in the box before proceeding for further assembly. This means L8 must precedes L7.

Therefor 8 ---> 7

i = 8: Box and PCB assembly then assemble to end-plate assembly. L1, L2, L3, L4, L5, L6, L8 should be done prior to L7.

Therefore 1,2,3,4,5,6,8 ---> 7

i = 9: Nothing precedes the whole assembly. So box can be inserted to whole assembly.

Q2) what liaisons must be left to be done after doing Liaison 'i'?

i = 1: Liaison 2, 3, 4 and 6

Therefore 1 ---> 2, 3, 4, 6

comments: After Liaison 1, sharpening device, Divider and connector and assembly must left to be done, before fixing the housing and switch together.

i = 2: Liaison 3, 4, 6 must be left

Therefore 2 ---> 3, 4, 6

Comments: Reason for this are same as above.

i = 3: Liaison 4 and 6 need to be left undone.

i = 4: L5 must be left done for the above said reason

Therefore 5 ---> 4

i = 5: Nothing.

Comment : Motor assembly will be fixed to connector after Divider is fixed.

i = 6: No Liaison.

Comment: Liaison L6 may be left for last, but it is not alone and last. If L6 is left for the last, so too are L7 and a choice of other liaisons.

i = 7: No Liaison.

i = 8: No Liaison.

i = 9: No Liaison.

The next step is to algorithmically generate sequences of the liaisons subject to the previous constraining relations. Figure 16 and figure 17 in the next page, the graphical representation of the possible sequences. In figure each box representing a state contains nine cells, each representing liaison, one through nine from left to right.

First line shows from one to five and next line shows form six to nine. A blank cell implies that the corresponding liaison is not established while a marked cell implies that the corresponding liaison has been established. Lines connecting the boxes represent the possible state transition. The whole blank box in the zeroth rank represents the wholly unassembled starting state, and the wholly

marked box in the ninth rank represents the wholly assembled or finished state. Each path through the diagram starting at the top and moving along lines through succeeding ranks to the bottom represents a valid liaison sequence.

63 liaison sequences can be verified by counting. A simple procedure for counting how many sequences there are, involves working upwards answering and recording for each state in each rank, the question "From this state, how many paths to the last rank are there?". The answer to this question for the single state in the zeroth rank is the number of valid liaison sequences.

8.3 CHOOSING GOOD ASSEMBLY SEQUENCE

After generating all of the physically possible sequences of assembly of a pencil sharpener, we have to choose the best assembly sequence.

The entire procedure for selecting the best sequencing procedure can be judgmental, qualitative, quantitative, or a combination of these and can be followed through any or several paths. Assembly moves may be eliminated when an acceptable alternative path exists and the move in question is difficult to accomplish or puts a part or parts at a risk of damage. Second, we can eliminate unacceptable assembly states to the equivalent of eliminating corresponding nodes or boxes from the assembly-sequence graph. Assembly states may be eliminated when an acceptable alternative path exists and the state in question is awkward, unstable or conditionally unstable under assembly conditions, or requires undue time, cost or equipment to maintain it between assembly moves.

One can enforce any of several assembly-sequence constraint. Such constraint can be arbitrary and may be based on designers/engineer's own concept of good practice. In the case of pencil sharpener, we can reduce the assembly sequences to 8, after eliminating few states by following the above

discussed methods. Figure 18 shows the reduced number of sequences, and any one of it can be followed to assemble the pencil sharpener.

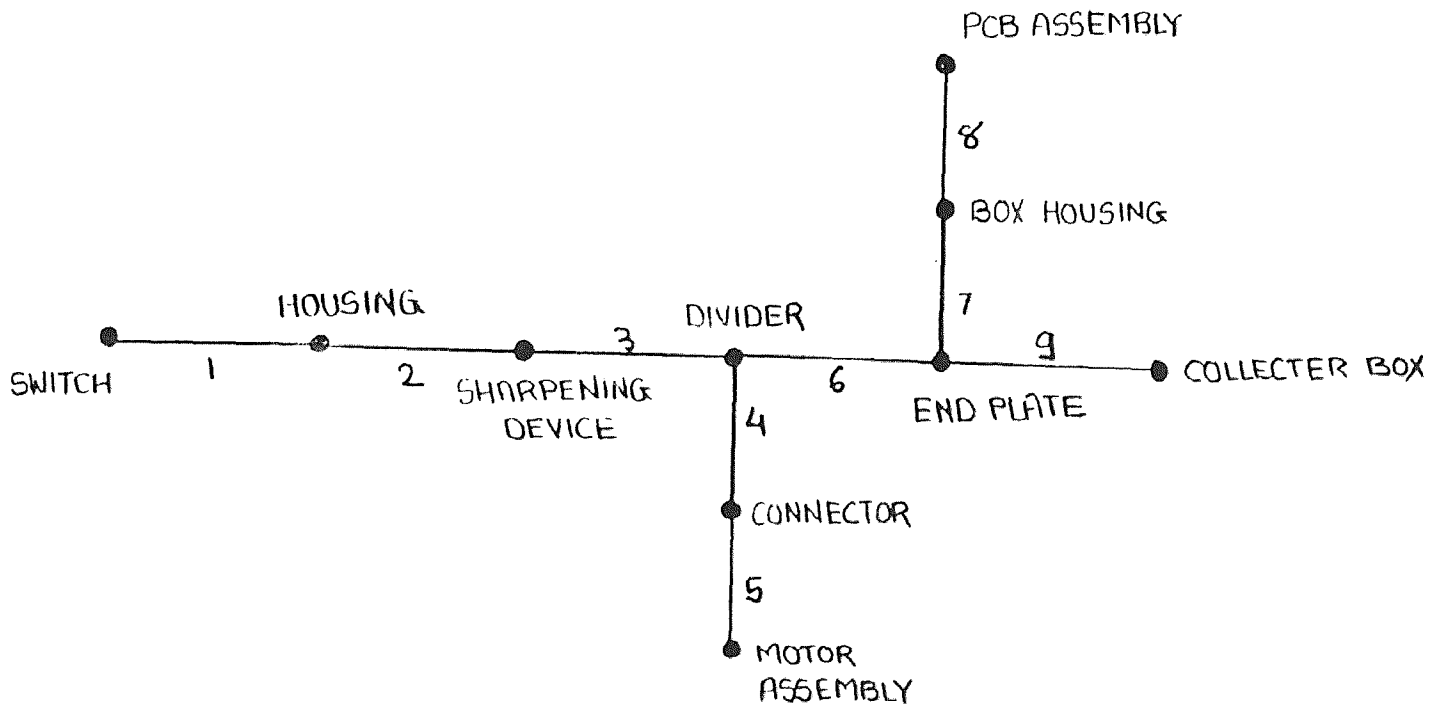

Figure 15 SEQUENCING PROCESS FOR PENCIL SHARPENER

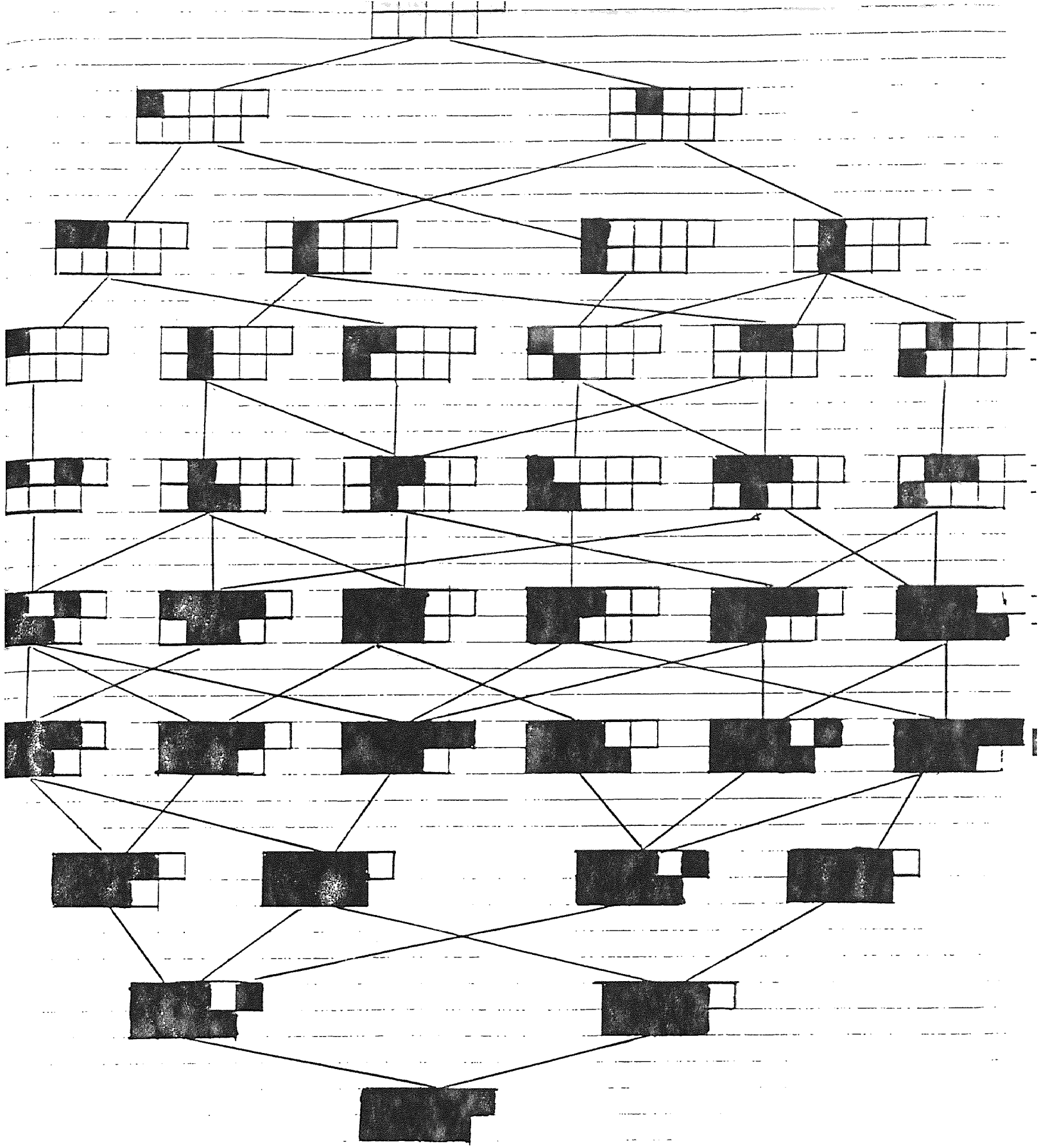

AVAILABLE SEQUENCING ALTERNATIVES

Figure 16

CHAPTER 9

FUTURE TRENDS IN DESIGN FOR MANUFACTURABILITY

One approach to implementing Design for Manufacturability is to use an appropriate set of principles and rules to help guide the design of the product and then to evaluate and redesign the product using an appropriate evaluation methodology. To assist this process, a third DFM thrust has been the development of a variety of computer-based and/or computer-aided design programs. Developments in this area include commercially available CAD software, research involving conventional interactive computer programming approaches, and research involving AI/expert system approaches.

9.1 COMMERCIAL SOFTWARE

A variety of commercial software has become available which provides Design for Manufacturability concept a great thrust. Programs which assist in the design of individual parts for a particular fabrication process are most common. Programs like Moldflow is a computer simulation of molten plastic moving through the gates, runners, and cavity of an injection mold. Embodied within the program is a Design for Manufacturability philosophy that encourages moldability analysis by pointing to part features that might cause warping and failure in production. The program does this, not by telling the production or design engineer how to produce or design the part or where to gate the mold, but by indicating results to be expected from a given choice of design and processing parameters. By performing "what-if" variations of his design and process, the engineer is able to converge iteratively to the best solution.

Another software is Variation Simulation Analysis Software, better known as VSAS, is an example of another type of commercial software which embodies and facilitates the Design for Manufacturability philosophy. This software allows the engineer to predict assembly tolerance and manufacturing variation before prototype can be built. This software uses Monte Carlo simulation technique, and simulates a production run by putting the assembly together, one step at a time, in the proper processing sequence, in specified number of times. Results of the simulation are analyzed, and a complete statistical picture of the proposed process is provided including a population distribution of critical dimensions, high and low limits, percentage of out-of-specification parts, and percent contribution of each component and operation to final assembly tolerances.

A major barrier to adopt Design For Manufacturability concept is time. Product designers are typically operating under very tight schedules and therefore reluctant to spend time considering Design for Manufacturability issues. Commercial computer software simplifies the effort and shorten the time required to implement Design for Manufacturability on daily basis

9.2 RESEARCH DEVELOPMENTS

Another approach to computer aided Design for Manufacturability is called MAPS-1.[17] Recognizing that material and process alternatives should be carefully considered in the design process, well before part geometries are specified, MAPS-1 provides a short list of the best combinations for further consideration by the designer. MAPS-1 system is intended as general purpose aid to the designer in making preliminary selections of materials and manufacturing processes for a given part. This code is used in conjunction with material and processing data bases to progressively eliminate materials and

processes, beginning with obviously unsuitable choices, and then proceeding to incompatible or difficult material and process combinations. The material/process combinations which remain are divided into two categories, usual practice and unusual practice. If the list of material/process combinations which remain is too large to be easily evaluated, the user may elect to have the program rank each candidate according to a predetermined criterion. There are several difficulties in this approach. Significant among these is the need to differentiate between primary and secondary processing: difficulties in dealing with process chains and processes such as heat treatment and surface coating which do not contribute to part geometry; developing and properly representing the large amounts of data required for the data bases

Another approach is called "Optimal Suggestions".[22] In this approach, the author accept that creative synthesis, or the design concept phase, will remain a human task for some time to come, and therefore ask what can be done to enhance the designer's capabilities in that stage. The solution consists of creating a program which makes "suggestions" to the designer during the conceptualization of the design. The suggestions are formulated in such a way that if they are all followed then optimal solution will be achieved. Hence, the suggestions act to both stimulate creativity and to show the way to good design. The suggestion ask the designer to design the individual parts of the product in such a way that a high assemblability efficiency will be attained. If other design constraints make it impossible to follow a suggestion, the next best design is pursued.

Another approach is a computerized approach to design for robotic assembly. The methodology described seeks to minimize the number of parts

used to achieve all required product functions while producing a design requiring minimum assembly cost in the form of robot and special tooling. This is done by guiding the product design process in such a way that he must consider and deal with specific robotic assembly issues as he develops the product design concept. Guidance is based on numerous design principles which facilitates robotic assembly.

9.2.1 Artificial Intellegence/Expert Systems

Some of the computer-aided DFM developments discussed above, the large amount of principles, rules, guidelines, and other heuristic data inherent in the DFM approach lead to variety of difficulties when conventional computer programming techniques are employed. The field of artificial intelligence and expert systems embodies a range of new programming techniques which appear to be well suited to DFM programming need. As indicated in a review of expert systems applications in mechanical design given by Dixon and Simmons. Extensive work on knowledge representation as well as development of AI techniques which avoid shortcomings associated with rule-based expert systems currently being used with success in other applications is needed to facilitate meaningful application of AI to design for manufacturability. Top level goal of this approach is to develop a theory and practice for mechanical design and manufacturing processes. The objective includes to learn how to develop expert systems in CAD environments that can do on-line evaluation of designs for their manufacturability, to explore the use of design with features as a means for creating a design data base that will serve manufacturing process planning as well as design and analysis needs, to develop a new language for knowledge representation in design that will facilitate the construction of expert systems in mechanical design. To implement this program, a series of sub-project topics

have been selected for use in gaining the theoretical understanding and practical experience needed to achieve the desired research objectives. Some of the specific topics under consideration include design of heat sinks, design and analysis for injection-molded parts, design of plastic extrusions, casting design, analysis, and process selection, plastic materials selection, and a domain independent iterative redesign program. It is important to create a single databases useful for both design and manufacturing.

CONCLUSION

Design For Manufacturablity (DFM) has been an effective tool for product design and analysis. This approach can be applied to any product for increasing design efficiency as well as overall efficiency. The efficiency of design of the product for assembly depends on the design of the product and the required assembly rate. Assembly cost is a major factor on product design. The suitability of any assembly method can be systematically assessed by the product design features even when the details of the assembly process are not known.

In the case of pencil sharpener, parts are analyzed and re-design of the parts are done. The reduction of parts is from 23 to 10. The analysis shows that the cost of old design for manual assembly is 66.18 cents, and the cost of assembly of re-designed pencil sharpener for manual assembly is 26.60 cents. The product design efficiency is increased form 16 % to 45 %. The cost of re-designed pencil sharpener for automatic assembly is only 3.63 cents. However in the case of automatic assembly the design efficiency is only 24 %. Time for assembly is reduced in the case of automatic assembly.

The main contribution of the presented work is the demonstration that the principles of design for manufacturablity can be applied successfully and with significant potential economic gains to complex, medium volume product such as pencil sharpener.

BIBLIOGRAPHY:

1. Paul Heidenreich (May,1988), Designing for Manufacturability, Quality Assembly,Machine Design,pp 87-92
2. Henry W. Stoll (January, 1988), Design for Manufacture, Manufacturing Manufacturing Review, pp 43-59
3. Danial Whitney (July-August, 1989), Manufacturing by Design,Harvard Manufacturing Implications, Manufacturing Review,pp 26-35
4. J.E.Cole (October, 1989), Design-to-Manufacture: an integrated Harvard Business Review, pp 120-126.
5. J.L.Stauffer(September, 1988), Product Design for Finish Quality, Manufacturing Engineering,pp 75-77
6. Robert Davis (December, 1989), Design Methodology And Industrial Business Review, pp 83-91
7 Stoll (September, 1986), Design for Manufacture, Applied Mech. Review, Progress, pp 44-47.
8. Robert Cooper (Spring, 1988), The New Product Process: A Decision pp 1357-1363.
9. Ravi Venkatesan (March-April, 1990) Cummins Engine Flexes its Factory, Engineering, Industrial Engineering, pp 45-46
10. Shigeyasu Sakamoto (March, 1989), Process Design Concept: A New Guide for Management, Journal of Marketing Management, pp 19-29.
11. James Dean,Jr. & Gerals Susman (January-February, 1989), Organizing information system, Computer Aided Engineering Journal, pp 159-165.
12. Boothroyd & Dewhurst (January,1984). Design for Assembly:Automatic Approach to IE, Industrial Engineering, pp 31-34.
13. Boothroyd & Dewhurst (February, 1984), Design for Assembly: Robots, Engineering, pp 44-49
14. Boothroyd & Dewhurst (November, 1983), Design for Assembly: Selecting Manufacturing to Deploy Advanced Manufacturing Technology, Interfaces, pp 63-74)
15. Boothroyd & Knight , Design for Machining, Fundamental of Machining for Manufacturable Design, Harvard Business Review, pp 28-36.
16. Boothroyd (February, 1988), Design for Assembly, Mechanical Machine Design, pp 72-74.
17. Boothroyd & Dewhurst (1983),"Design for Assembly Hand Book"the Right Method, Machine Design, pp 94-97.
18. Gerald Nadler (July, 1989), Design Process and Their Results,Industrial and Machine Tools, pp 399-465.
19. Jeffrey L. Funk (March, 1989) Design for Assembly of Electrical Products, in Better Design, Mechanical Engineering, pp 52-53.

20. Robert U. Ayres (March,1988) Complexity, Reliability and Design: Engineering, pp 28-30.

21. Brazier & Leonard (January, 1990), Concurrent Engineering: Participating Engineering, pp 67-71.

22. Carol Bancroft (September, 1988), Design for Manufacturability: Half

23. Thomas De Fazio & Daniel Whitney, Simplified Generation of All Mechanical Assembly Sequences, IEEE Journal of Robotics & Automation, pp 640-656.

24. John Ettlie & Stacy Reifeis (Nov.-Dec.,1987), Integrating Design and Speed Ahead, Manufacturing Engineering, pp 67-68.