View metadata, citation and similar papers at core.ac.uk

brought to you by CORE

provided by Dartmouth Digital Commons (Dartmouth College)

Dartmouth College
Dartmouth Digital Commons

Open Dartmouth: Faculty Open Access Articles

10-19-2008

Identification of Two Gene Clusters and a Transcriptional Regulator Required for Pseudomonas aeruginosa Glycine Betaine Catabolism

Matthew J. Wargo
Dartmouth College

Benjamin S. Szwergold
Dartmouth College

Deborah A. Hogan
Dartmouth College

Follow this and additional works at: https://digitalcommons.dartmouth.edu/facoa

Part of the Bacteriology Commons, Medical Genetics Commons, and the Medical Microbiology Commons

Recommended Citation

Wargo, Matthew J.; Szwergold, Benjamin S.; and Hogan, Deborah A., "Identification of Two Gene Clusters and a Transcriptional Regulator Required for Pseudomonas aeruginosa Glycine Betaine Catabolism" (2008). *Open Dartmouth: Faculty Open Access Articles*. 1087.
https://digitalcommons.dartmouth.edu/facoa/1087

This Article is brought to you for free and open access by Dartmouth Digital Commons. It has been accepted for inclusion in Open Dartmouth: Faculty Open Access Articles by an authorized administrator of Dartmouth Digital Commons. For more information, please contact dartmouthdigitalcommons@groups.dartmouth.edu.

JOURNAL OF BACTERIOLOGY, Apr. 2008, p. 2690–2699 Vol. 190, No. 8
0021-9193/08/$08.00+0 doi:10.1128/JB.01393-07
Copyright © 2008, American Society for Microbiology. All Rights Reserved.

Identification of Two Gene Clusters and a Transcriptional Regulator Required for *Pseudomonas aeruginosa* Glycine Betaine Catabolism▽†

Matthew J. Wargo,[1] Benjamin S. Szwergold,[2] and Deborah A. Hogan[1]*

Department of Microbiology and Immunology[1] and Department of Medicine,[2] Dartmouth Medical School, Hanover, New Hampshire 03755

Received 28 August 2007/Accepted 9 October 2007

Glycine betaine (GB), which occurs freely in the environment and is an intermediate in the catabolism of choline and carnitine, can serve as a sole source of carbon or nitrogen in *Pseudomonas aeruginosa*. Twelve mutants defective in growth on GB as the sole carbon source were identified through a genetic screen of a nonredundant PA14 transposon mutant library. Further growth experiments showed that strains with mutations in two genes, *gbcA* (PA5410) and *gbcB* (PA5411), were capable of growth on dimethylglycine (DMG), a catabolic product of GB, but not on GB itself. Subsequent nuclear magnetic resonance (NMR) experiments with 1,2-^{13}C-labeled choline indicated that these genes are necessary for conversion of GB to DMG. Similar experiments showed that strains with mutations in the *dgcAB* (PA5398-PA5399) genes, which exhibit homology to genes that encode other enzymes with demethylase activity, are required for the conversion of DMG to sarcosine. Mutant analyses and ^{13}C NMR studies also confirmed that the *soxBDAG* genes, predicted to encode a sarcosine oxidase, are required for sarcosine catabolism. Our screen also identified a predicted AraC family transcriptional regulator, encoded by *gbdR* (PA5380), that is required for growth on GB and DMG and for the induction of *gbcA*, *gbcB*, and *dgcAB* in response to GB or DMG. Mutants defective in the previously described *gbt* gene (PA3082) grew on GB with kinetics similar to those of the wild type in both the PAO1 and PA14 strain backgrounds. These studies provided important insight into both the mechanism and the regulation of the catabolism of GB in *P. aeruginosa*.

A number of microbes, including *Pseudomonas aeruginosa*, can utilize glycine betaine (GB) as a sole carbon, nitrogen, and energy source (17, 35, 41). GB, an important osmoprotectant for many bacteria (6), is available to organisms in a variety of environments (5, 14, 34, 41). Free GB can be released by roots (9), microbes (14, 15), or decaying animal (20) and plant (10) matter. Alternatively, GB can be derived from choline or carnitine (4, 5, 12, 15, 20, 36). Choline and carnitine can be found in many eukaryote-associated environments, and bacteria, including *P. aeruginosa*, can use phospholipases and choline phosphatases to release choline from phosphatidylcholine (30, 38). In *P. aeruginosa*, choline is oxidized to GB by a two-step process catalyzed by BetA and BetB (29, 36), while carnitine is predicted to be reduced and deacetylated by uncharacterized enzymes, ultimately yielding GB (16).

The aerobic catabolism of GB in bacteria is best understood in *Sinohizobium* (35), *Corynebacterium* (8, 37), and *Arthrobacter* species (24). The data from these studies suggest that GB catabolism occurs via serial demethylation that forms dimethylglycine (DMG), then sarcosine (also called monomethylglycine), and finally glycine (Fig. 1). Thin-layer chromatographic analyses indicated that in *P. aeruginosa* DMG and sarcosine are also intermediates formed during GB catabolism (11). Furthermore, in the same study, a proteomics analysis of *P. aeruginosa* cultures grown on GB showed that higher levels of the putative sarcosine oxidase subunits are present during growth on GB (11).

Some enzymes involved in GB and DMG catabolism have been characterized in different bacterial species. For example, the demethylation of GB to form DMG has been hypothesized to occur via a betaine homocysteine methyltransferase in *Sinorhizobium meliloti* and *Pseudomonas denitrificans* based on measurements of enzyme activity in cell extracts (35, 43). In *Arthrobacter globiformis*, DMG demethylation to sarcosine is catalyzed by a DMG oxidase with similarity to eukaryotic DMG dehydrogenases (24). In *Corynebacterium* (8, 37) and *Arthrobacter* (24), a heterotetrameric sarcosine oxidase converts sarcosine into glycine. However, the complete gene set required for conversion of GB to glycine has not been described in any bacterium, nor is there any information about how the genes are regulated at the molecular level.

Using a screen of a nonredundant *P. aeruginosa* strain PA14 transposon mutant library for mutants unable to grow on GB, we identified genes required for growth on GB and DMG that share no obvious homology to other genes known to be involved in the catabolism of these two compounds (21). Growth experiments, nuclear magnetic resonance (NMR) studies, and reverse transcription-PCR (RT-PCR) analyses led to identification of a gene cluster encoding a putative GB demethylase. In addition, we identified an operon encoding a putative DMG demethylase that is more similar to a bacterial *N*-methylproline demethylase than to the only verified bacterial DMG demethylase from *Arthrobacter* (24). We identified a transcription factor which regulates these putative catabolic genes in response to GB and DMG and thus described the first transcriptional regulator of GB catabolism in bacteria. Finally, we con-

* Corresponding author. Mailing address: HB7550, Dartmouth Medical School, Hanover, NH 03755. Phone: (603) 650-1252. Fax: (603) 650-1318. E-mail: dhogan@dartmouth.edu.

† Supplemental material for this article may be found at http://jb.asm.org/.

▽ Published ahead of print on 19 October 2007.

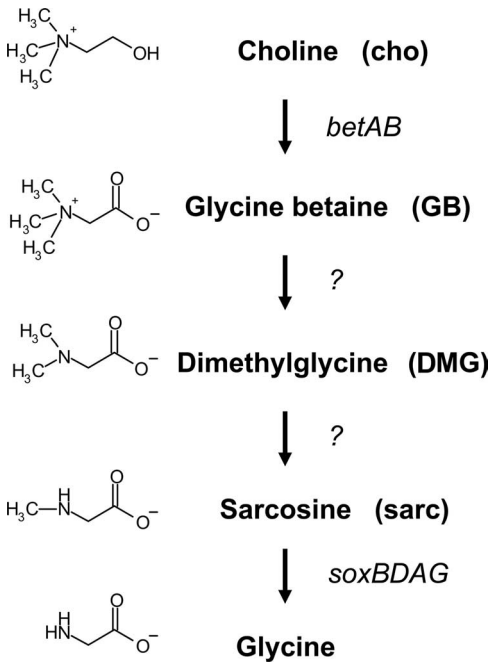

FIG. 1. Predicted pathway for choline catabolism in *P. aeruginosa* (5, 11).

firmed the role of the *soxBDAG* genes in the conversion of sarcosine to glycine in *P. aeruginosa*.

MATERIALS AND METHODS

Strains, media, and growth conditions. *P. aeruginosa* PA14 and PAO1 wild-type strains, transposon mutants, and deletion strains, as well as *Escherichia coli* strains (Table 1) were maintained on LB medium. For experiments with single carbon sources, morpholinepropanesulfonic acid (MOPS) minimal medium (25) containing a specified carbon source at a concentration of 20 mM was used unless otherwise noted. When necessary, gentamicin was added to a final concentration of 15 μg/ml for *E. coli* in liquid, to a final concentration of 20 μg/ml for *E. coli* on plates, and to a final concentration of 60 μg/ml for *P. aeruginosa*.

Genetic screen. The PA14 nonredundant transposon mutant library was replicated as described by Liberati et al. (21). Using frozen stocks, strains were replicated onto LB agar plates with a 48-pin replicator and incubated overnight at 37°C. Mutants were then transferred onto MOPS medium plates containing GB and incubated for 24 h at 37°C. Strains that were defective in growth on MOPS medium containing GB were recovered from the LB agar master plates and arrayed manually on 48-spot LB agar plates. After overnight growth, mutants were transferred to MOPS agar plates with either 20 mM glucose, 20 mM pyruvate, 20 mM choline, 20 mM GB, or 20 mM DMG and incubated at 37°C for 24 h. Transposon insertion sites were confirmed using gene-specific primers and the PMFLGM.GB-4a primer described by Liberati et al. (21).

Growth assays. Growth assays were conducted in 96-well polystyrene plates using a Spectromax plate reader (Molecular Devices). To obtain carbon source growth curves, cells were grown overnight in MOPS medium with 20 mM pyruvate and 5 mM glucose. The overnight cultures were pelleted, washed, and inoculated into MOPS medium with the appropriate carbon source to an initial A_{600} of 0.05. Plates were shaken at 37°C, and growth was measured by determining the optical density (A_{600}) every hour. To test whether different compounds could serve as sole sources of nitrogen, growth experiments were performed in a similar manner, except that M63 medium containing 0.2% glucose but lacking ammonium chloride (3) and amended with 20 mM choline, 20 mM lysine, 20 mM GB, 20 mM DMG, or 20 mM sarcosine was used. Mutants defective in PA3082 were grown on the media described above, as well as in the minimal medium described by Serra et al. (33), and compared to the wild type.

Construction of deletion strains and complementation constructs. All gene numbers in this paper are the numbers for the PAO1 genome. The genes described here had at least 99% identity at both the nucleotide and amino acid levels when PAO1 and PA14 sequences were compared. In addition, the genomic region from PA5380 to PA5411 is organized in the same manner in both genomes.

Deletion constructs for PA5380, PA5410-PA5411, PA3082, and PA5398 were obtained using the pEX18-Gm plasmid, and the mutations in *P. aeruginosa* were obtained by recombination as described previously (32). Briefly, pEX18-Gm constructs were transformed into *E. coli* S17/λpir. *E. coli* was mated with the recipient *P. aeruginosa* strain, and single-crossover mutants were selected by growth on gentamicin. After selection for strains in which double-crossover events had occurred by growth on LB medium plates containing 5% sucrose with no NaCl, in-frame deletion mutants were identified by PCR. The primers used for construction of the deletion constructs are listed in Table S1 in the supplemental material. The nucleotides corresponding to the region from amino acid 8 to amino acid 361 were deleted to construct the PA5380 deletion strain, and the region from amino acid 12 to amino acid 657 was deleted to construct the PA5398 deletion strain. The PA5410-PA5411 deletion eliminated the start codons, as they are divergently transcribed, and the majority of the coding regions of both genes. The PA3082 deletion eliminated the region from amino acid 7 to amino acid 648. Complementing plasmids were constructed using the pUCP22 vector (42). The PA5410-PA5411 region was amplified using primers 5410-5411For_resc (5′-CACAGGGGATTGTTTTCCAC-3′) and 5410-5411Rev_resc (5′-GAGTACCCGTGCTTCGACA-3′), cloned into PCR2.1 (Invitrogen), excised from PCR2.1 using EcoRI, and ligated into pUCP22 treated with EcoRI and shrimp alkaline phosphatase (Roche). For PA5380, the gene was amplified using primers PA5380_coverstart_EcoRI (5′-ATAGGAATTCTACACCCATG ACCACGTACG-3′) and PA5380_C-term_Rev (5′-GTTAAAGCTTGATCCG CACGCTGGCGAAGGTCGACTCG-3′), cloned into PCR2.1, excised from PCR2.1 with SacI and EcoRV, and ligated into pUCP22 cut with SacI and SmaI, forming an in-frame fusion with the first seven amino acids of the N terminus of the β-galactosidase alpha fragment.

RNA isolation, RT-PCR, and real time RT-PCR. For gene induction experiments, cells were grown overnight in MOPS medium with 20 mM pyruvate and 5 mM glucose. Cells were harvested by centrifugation, resuspended in MOPS medium with 20 mM pyruvate and the inducing carbon source at a concentration of 10 mM, and grown for 2 h at 37°C. RNA was isolated from ~10^7 cells using an RNeasy kit (Qiagen). Pyruvate was used as a growth substrate for a strain that was not capable of growth on GB without detectable catabolite repression (11; data not shown). RNA was treated with 2 U of RQ1 DNase (Promega) for 1 h at 37°C, followed by a second purification using the RNeasy kit. A final DNase step using a DNA-*free* kit (Ambion) was performed. The resulting RNA was subjected to PCR to verify the absence of contaminating DNA before it was quantified using a Nanodrop spectrophotometer. cDNA was synthesized using SuperScript III (Invitrogen), 250 ng of starting RNA, and a 5′-NSNSNSNSNS-3′ primer instead of random hexamers. The primers used are shown in Table S1 in the supplemental material. The PCR regimen was 94°C for 5 min, followed by 30 cycles of 94°C for 30 s, 55°C for 40 s, and 72°C for 30 s. Quantitative real-time RT-PCR was performed with SYBR green and AmpliTaq Gold DNA polymerase used according to the manufacturer's instructions (Applied Biosystems). The amplification conditions with an Applied Biosystems 7500 instrument were 95°C for 10 min, followed by 40 cycles of 95°C for 30 s, 56°C for 30 s, and 72°C for 30 s. Only one PCR product was obtained for all primers and all samples based on melting curve analysis.

^{13}C NMR analysis. For NMR analysis, cells were grown overnight in MOPS medium with 20 mM pyruvate and 5 mM choline. These cells were resuspended in fresh MOPS medium with 7 mM [1,2-^{13}C]choline (Cambridge Isotope Laboratories) and grown for the specified period of time (3 or 9 h). Cell pellets were extracted twice with 80% ethanol at room temperature. The extracts were lyophilized and resuspended in 200 μl of 50 mM phosphate buffer (pH 7.25) that included 20% D_2O in 5-mm NMR tubes. ^{13}C NMR spectra were acquired with a Varian Unity 500 spectrometer at 125.69 MHz using 60° pulses and on average 20,000 to 40,000 free induction decays. Identification of the peaks for choline and its metabolites was based on a comparison of the experimental spectra with a database of chemical shifts compiled from NMR analyses of authentic standards. The two observable peaks for choline corresponding to the C-O carbon and the C-N carbon are at 68.33 and 56.63 ppm, respectively. The C-N peaks for GB, DMG, and sarcosine are at 67.00, 60.74, and 51.75 ppm, respectively.

RESULTS

Genetic screen of the PA14 transposon mutant library for mutants defective in growth on GB. To identify the genes required for growth on GB, the *P. aeruginosa* PA14 nonredun-

TABLE 1. Strains and plasmids

Strain, genotype, or plasmid	Proposed gene designation[a]	Strain	Description
P. aeruginosa strains			
PA14		DH122	*P. aeruginosa* wild type[b]
ΔPA5380	Δ*gbdR*	DH466	In-frame PA5380 deletion in PA14
ΔPA5410-PA5411	Δ*gbcA-gbcB*	DH802	Deletion of PA5410 and PA5411 in PA14
ΔPA5398	Δ*dgcA*	DH848	In-frame PA5398 deletion in PA14
ΔPA5380	Δ*gbdR*-pGbdR	DH478	DH466 with pGbdR, Gm^r
ΔPA5410-PA5411	Δ*gbcAB*-pGbcAB	DH804	DH802 with pGbcAB, Gm^r
betA::Tn*M*		DH846	Mutant 40757[c]
PA5380::Tn*M*		DH662	Mutant 24457[c]
PA5396::Tn*M*		DH624	Mutant 40467[c]
PA5397::Tn*M*		DH628	Mutant 35214[c]
PA5398::Tn*M*		DH636	Mutant 48591[c]
PA5399::Tn*M*		DH679	Mutant 32077[c]
PA5410::Tn*M*		DH641	Mutant 53996[c]
PA5411::Tn*M*		DH667	Mutant 26808[c]
soxA::Tn*M*		DH647	Mutant 56207[c]
ΔPA5380	Δ*gbdR*	DH543	In-frame PA5380 deletion in PAO1
ΔPA5410-PA5411	Δ*gbcA-gbcB*	DH841	Deletion of PA5410 and PA5411 in PAO1
PA3082::Tn*M*		DH969	Mutant 4673[c]
PA3082::Tn*M*		DH970	Mutant 30085[c]
PA3082::Tn*M*		DH971	Mutant 41423[c]
PA3082::IS*lacZ/hah*		DH501	Mutant 8922 in *P. aeruginosa* PAO1[d]
ΔPA3082		DH972	In-frame PA3082 deletion in PA14
E. coli strains			
S17/l-pir		DH522	
Ec-PA5380KO		DH540	DH522 with pPA5380KO, Gm^r
Ec-PA5410-5411KO		DH791	DH522 with pPA5410-5411KO, Gm^r
Ec-PA5398KO		DH843	DH522 with pPA5398KO, Gm^r
Ec-PA3082KO		DH973	DH522 with pPA3082KO, Gm^r
Plasmids			
pUCP22			Gm^r, contains *P. aeruginosa* stabilization fragment
pEX18-Gm			Gm^r, integrating vector in *P. aeruginosa*
pGbdR			PA5380 coding region in frame with the N terminus of *lacZa* in pUCP22
pGbcAB			PA5410-PA5411 genomic region in pUCP22
pPA5380KO			PA5380 deletion construct in pEX18-Gm
pPA5410-5411KO			PA5410-PA5411 deletion construct in pEX18-Gm
pPA5398KO			PA5398 deletion construct in pEX18-Gm
pPA3082KO			PA3082 deletion construct in pMQ30

[a] Proposed designations for genes based on the data presented in this paper.
[b] See reference 27.
[c] See the website of F. M. Ausubel for more information (http://ausubellab.mgh.harvard.edu/cgi-bin/pa14/home.cgi).
[d] PAO1 transposon mutants were obtained from the University of Washington Genome Center.

dant library, which contains 5,459 mutants with transposon insertions in 4,596 predicted genes (21), was screened to find mutants that lacked the ability to grow in minimal medium with GB as the sole carbon source.

Because the initial screen identified auxotrophs in addition to mutants defective in GB catabolism, we performed secondary screens to identify mutants capable of growth on minimal media containing glucose or pyruvate but not on medium with GB as the sole carbon source. Mutants that could not grow on pyruvate and glucose were omitted from the subsequent analyses. The mutant strains with growth defects on GB were also analyzed to determine their growth on choline, GB, and DMG in order to sort mutants into classes based on their apparent catabolic defects. Growth on sarcosine or glycine was not tested because *P. aeruginosa* grows poorly on these carbon sources on agar plates. The 12 mutants with growth defects on GB could be separated into two classes. Class I mutant strains were unable to grow on choline or GB but could grow on DMG (2 genes), and class II mutant strains were unable to grow on choline, GB, or DMG (10 genes). In all cases, the location of the transposon insertion was confirmed by PCR using gene-specific primers in combination with a primer located in the transposon.

The class I strains, which were defective in growth on choline and GB but not on DMG, included two mutant strains, each defective in one of two adjacent, divergently transcribed genes, PA14_71410 (corresponding to PA5410) and PA14_71420 (corresponding to PA5411).

The 10 mutants in class II were unable to grow on choline, GB, or DMG, suggesting that they were defective at or downstream of the conversion of DMG to sarcosine. As predicted, mutants with transposon insertions in the putative sarcosine catabolic genes (*soxABDG*) and a putative glycine catabolic gene (*glyA1*) were members of this class. These data provide

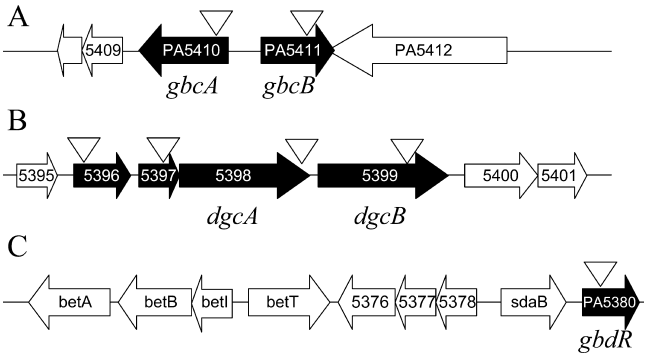

FIG. 2. Genomic arrangement of the genes involved in GB catabolism. Genes identified in the screen are indicated by filled arrows, and the transposon insertion sites are indicated by open triangles. (A) Genomic region surrounding PA5410 and PA5411. (B) Genomic region including the PA5396-PA5399 putative operon. (C) Genes in the vicinity of PA5380.

functional evidence that supports the hypothesis that the *sox* genes in *P. aeruginosa*, designated based on their strong homology to the sarcosine oxidase system in *Corynebacterium* (8), are required for sarcosine catabolism in *P. aeruginosa* (11). In addition, we identified mutants with transposon insertions in a predicted operon, PA14_71240-PA14_71280 (corresponding to PA5396-PA5399). Finally, a mutant defective in a gene encoding an AraC family transcription factor, PA14_71070 (corresponding to PA5380), was found to be incapable of growth on any of the GB-related substrates (choline, GB, or DMG).

Analysis of the role of PA5410 and PA5411 in GB catabolism. Two transposon mutant strains were categorized as class I GB catabolic mutants based on their inability to grow on choline or GB, but they were able to grow on DMG (data not shown). This growth phenotype suggested a role for the gene products in the catabolism of GB to DMG. To obtain insight into the roles of PA5410 and PA5411, we performed BLASTP analysis (1). The PA5410 gene encodes a protein with homology to the large subunit of numerous predicted and validated bacterial hydroxylating dioxygenases. The PA5411 gene encodes a probable flavin adenine dinucleotide-binding ferrodoxin reductase based on similarity to a number of predicted gram-negative proteins and COG analysis, although the closest homologue with a known function is PaaK in *Pseudomonas fluorescens* (46% similarity and 29% identity; accession number ABF82243). PA5410 and PA5411 are adjacent and divergently transcribed (Fig. 2A), a common arrangement of the dioxygenase gene and associated ferrodoxin reductase gene for many of the predicted homologues (http://cmr.tigr.org/).

Transposon insertion into either PA5410 or PA5411 resulted in an inability of the strains to grow on choline or GB as a sole carbon source. To confirm that this growth defect was due to transposon insertion into these open reading frames (ORFs), we generated a deletion of both reading frames and the intervening intragenic sequence in *P. aeruginosa* PA14. Consistent with the phenotypes of the transposon mutants, the *P. aeruginosa* ΔPA5410-PA5411 strain was defective in growth on choline or GB but could grow on DMG (Table 2). When the ΔPA5410-PA5411 strain was grown in minimal medium with glucose or pyruvate as the sole carbon source, its growth rate was indistinguishable from that of PA14 (Table 2 and data not shown). Complementation with the PA5410 and PA5411 genes on a plasmid (pGbcAB) under control of their native promoters partially restored the ability to grow on choline and GB (Table 2). To test whether these genes were necessary for growth using choline or GB as a sole source of nitrogen, the ΔPA5410-PA5411 mutant was grown in minimal medium with glucose as the carbon source and lysine, choline, GB, DMG, or sarcosine as the only source of nitrogen. These analyses showed that the PA5410 and PA5411 genes are also necessary for the utilization of choline and GB as sole nitrogen sources but are not required for the utilization DMG, sarcosine, or lysine (data not shown). Deletion of PA5410 and PA5411 in *P. aeruginosa* strain PAO1 also abrogated the ability to grow on GB as a sole source of carbon (data not shown).

To determine if PA5410 and PA5411 were induced during growth on GB or related compounds, cultures were grown in minimal medium with pyruvate and then transferred to medium containing pyruvate, GB, DMG, or sarcosine for 2 h. While PA5410 and PA5411 transcripts were not detected in medium with pyruvate or sarcosine, high levels of these transcripts were present in medium containing GB or DMG (Fig. 3). This finding is supported by the results of a quantitative transcript analysis which showed that PA5410 was present at levels that were 262- ± 19-fold higher in the presence of GB than in the presence of pyruvate and that PA5411 was present at levels that were 41.5- ± 8.8-fold higher in the presence of GB than in the presence of pyruvate. The *rplU* transcript,

TABLE 2. Doubling times of wild-type and mutant strains grown with glucose, choline, GB, or DMG as the sole source of carbon

Strain or genotype	Proposed designation[a]	Plasmid	Doubling time (h) with:			
			Glucose	Choline	GB	DMG
PA14			0.91 (0.01)[b]	2.72 (0.01)	2.57 (0.12)	2.07 (0.09)
PA14		pUCP22	1.19 (0.13)	2.99 (0.29)	4.75 (0.35)	5.13 (0.31)
ΔPA5410-PA5411	Δ*gbcA-gbcB*	pUCP22	1.02 (0.01)	NG[c]	NG	6.51 (0.38)
ΔPA5410-PA5411	Δ*gbcA-gbcB*	pGbcAB	1.29 (0.01)	3.52 (0.03)	7.49 (0.20)	4.64 (0.32)
ΔPA5398	Δ*dgcA*		1.26 (0.02)	NG	NG	NG
PA5399:Tn*M*	*dgcB*::Tn*M*		1.06 (0.07)	NG	NG	NG
ΔPA5380	Δ*gbdR*	pUCP22	1.44 (0.45)	NG	NG	NG
ΔPA5380	Δ*gbdR*	pGbdR	1.10 (0.09)	2.81 (0.83)	7.36 (1.59)	7.53 (0.21)

[a] Proposed designations based on data presented in this paper.
[b] The values in parentheses are standard deviations.
[c] NG, no detectable growth.

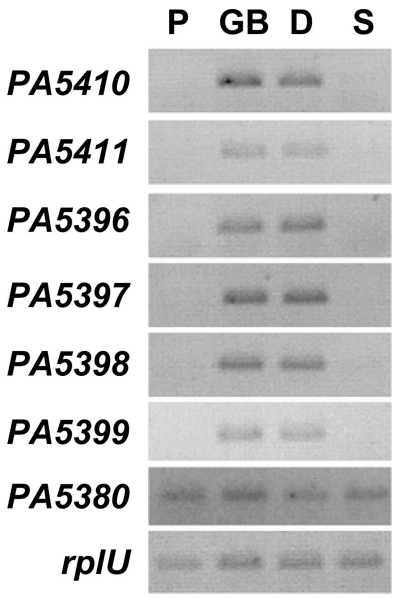

FIG. 3. Semiquantitative RT-PCR analysis of *P. aeruginosa* cells after 2 h of induction with pyruvate (P), GB, DMG (D), or sarcosine (S). PA5410 (*gbcA*), PA5411 (*gbcB*), PA5398 (*dgcA*), PA5399 (*dgcB*), and PA5380 (*gbdR*) transcript levels are shown. *rplU* was used as a control transcript.

which encodes a ribosomal subunit and has been shown to remain unchanged relative to the total RNA under a variety of conditions, was used as a control transcript in this and other analyses and to normalize the quantitative real-time PCR signals (18).

The inability of the PA5410 and PA5411 transposon mutants and the ΔPA5410-PA5411 mutant strain to grow on choline or GB and the absence of defects in growth on DMG suggested that these genes encode proteins involved in the conversion of GB to DMG. Based on our findings, these genes were designated *gbcA* and *gbcB* (*g*lycine *b*etaine *c*atabolism *A* and *B*), respectively.

Analysis of the role of the PA5396-PA5399 putative operon in DMG catabolism. Four mutant strains with transposon insertions in each gene in the PA5396-PA5399 putative operon (Fig. 2B) were unable to grow on choline, GB, or DMG (Table 2 and data not shown). BLASTP analysis predicted that PA5396 encodes a putative Zn-dependent dipeptidase with high similarity to a predicted aminohydrolase in *P. aeruginosa* that has been crystallized (accession no. 2I5G_A). PA5397 encodes a small protein with an unknown function. PA5398 encodes a predicted flavin mononucleotide oxidoreductase that is 60% similar and 43% identical (over 635 amino acids) to a putative *N*-methylproline demethylase from *Mesorhizobium loti* (accession no. NP_108417). PA5399 encodes a probable membrane-spanning ferrodoxin Fe-S oxidoreductase with high levels of similarity to a large number of predicted membrane-spanning ferrodoxins in gram-negative bacteria.

Transposon insertion into PA5396, PA5397, PA5398, and PA5399, which are predicted to form an operon, resulted in an inability of *P. aeruginosa* to grow on choline, GB, or DMG as a sole carbon source (Table 2 and data not shown). The similarity of the PA5398 protein to enzymes with demethylation activity suggested that this gene may be directly involved in the demethylation of DMG to sarcosine. To test this hypothesis, we generated a mutant with an in-frame deletion in the PA5398 gene. As predicted, the *P. aeruginosa* ΔPA5398 mutant was defective in growth on choline, GB, and DMG (Table 2). When the ΔPA5398 mutant was grown in minimal medium with glucose or pyruvate, the growth rate was indistinguishable from that of wild-type strain PA14 (Table 2 and data not shown). To further test the hypothesis that PA5398 is involved in DMG catalysis, the PA5398 and PA5399 transposon mutants and the ΔPA5398 mutant were tested for growth on choline, GB, DMG, and sarcosine as sole sources of nitrogen. Because these mutant strains were able to use sarcosine and lysine but not choline, GB, or DMG (data not shown), we predicted that PA5398 and PA5399 encode proteins critical for the conversion of DMG to sarcosine, which involves a demethylation step. It is not known whether the growth defects on DMG exhibited by the PA5396::Tn*M* and PA5397::Tn*M* mutants, which have disruptions in the two genes upstream of PA5398-PA5399 (Fig. 2), are due to polar effects on PA5398 or if these genes also play a role in DMG catabolism (Tn*M* is the *MAR2×T7* transposon insertion).

We predicted that, like transcription of *gbcA* and *gbcB*, transcription of PA5398-PA5399 would be induced by growth on GB and DMG but not by growth on sarcosine. The transcript levels for all of the genes in this predicted operon were strongly increased in medium containing GB and DMG, but the transcripts were not detectable in medium with pyruvate or sarcosine (Fig. 3), consistent with the predicted function of the enzymes. As determined by real-time PCR, the transcript levels for PA5398 and PA5399 were 194- ± 58-fold and 181- ± 44-fold higher, respectively, in the presence of GB than in the presence of pyruvate.

Based on the growth phenotypes of the ΔPA5398 mutant and the transposon mutants with mutations in the PA5396-PA5399 genes, we designated the PA5398 and PA5399 genes *dgcAB* (*d*imethylglycine *c*atabolism).

Analysis of the accumulation of catabolic intermediates in mutants defective in *gbcA* and *gbcB*, *dgcB*, and *soxA*. To obtain additional evidence that *gbcA* and *gbcB* are involved in conversion of GB to DMG and that *dgcA* and *dgcB* are involved in conversion of DMG to sarcosine, cells were fed 1,2-^{13}C-labeled choline, and the accumulation of catabolic intermediates was analyzed by NMR. This isotope enrichment of choline was used because, as shown in Fig. 4, the presence of ^{13}C labels on adjacent carbons results in spectra in which choline and its metabolites appear as characteristic doublets due to the spin-spin coupling between the adjacent ^{13}C nuclei. As shown in Fig. 4A, in wild-type cells choline had been converted primarily to GB after 3 h. After 9 h, only small amounts of GB remained, and no choline or other GB catabolic intermediates were observed, indicating that the choline had been largely mineralized or assimilated into cellular carbon (data not shown). By contrast, when the Δ*gbcA-gbcB* cells were provided with [1,2-^{13}C]choline as the sole carbon source, only GB was detected at 9 h (Fig. 4B). When *dgcB*::Tn*M* cells were provided with [1,2-^{13}C]choline as the sole carbon source, some choline and GB were detected, but the majority of the substrate that accumulated was DMG (Fig. 4C). Consistent with the genetic and bioinformatics evidence that *soxBDAG* genes encode an en-

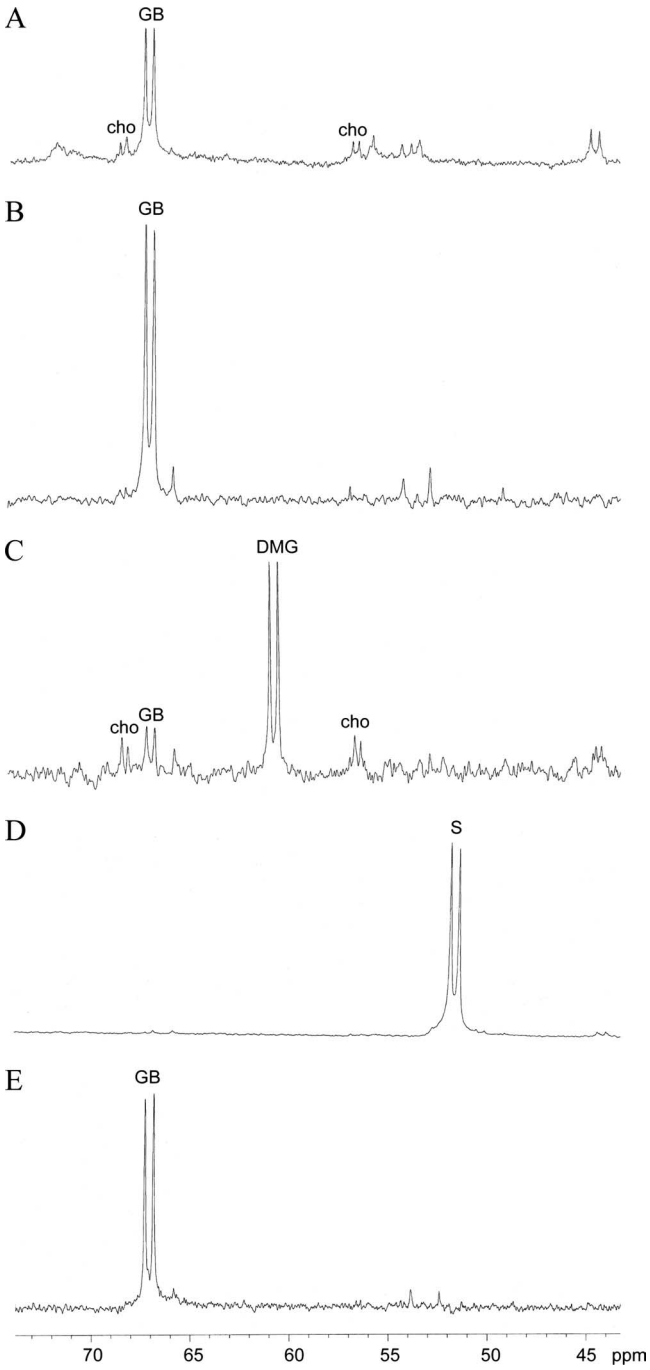

FIG. 4. ^{13}C NMR spectra of *P. aeruginosa* cell extracts after incubation with [1,2-^{13}C]choline as the sole carbon source. (A) Wild type at 3 h. (B) Δ*gbcA-gbcB* mutant at 9 h. (C) Δ*dgcB*::Tn*M* mutant at 9 h. (D) *soxA*::Tn*M* mutant at 9 h. (E) ΔPA5380 (Δ*gbdR*) mutant at 9 h. The peaks are labeled. cho, choline; S, sarcosine.

zyme that catalyzes the conversion of sarcosine to glycine (8), only sarcosine was detected at 9 h in extracts from *soxA*::Tn*M* cells provided with [1,2-^{13}C]choline as the sole carbon source (Fig. 4D). These findings are in agreement with our genetic predictions that *gbcA* and *gbcB* are required for conversion of GB to DMG, that *dgcB* is involved in conversion of DMG to sarcosine, and that *soxA* is required for conversion of sarcosine to glycine in *P. aeruginosa*.

PA5380 encodes a transcription factor that is required for growth on choline, GB, and DMG. PA5380, one of the genes disrupted by a transposon in our class II, which was comprised of strains unable to grow on choline, GB, or DMG, encodes a predicted AraC/XylS family transcription factor.

Transposon insertion 159 bp downstream of the PA5380 start codon resulted in a strain unable to utilize choline, GB, and DMG as sole carbon sources (Fig. 2C and data not shown). To confirm this phenotype, we generated an in-frame deletion of PA5380 in *P. aeruginosa*. *P. aeruginosa* strain PA14 mutants that lack the PA5380 gene are defective in growth on choline, GB, and DMG as sole carbon or nitrogen sources (Table 2 and data not shown). Complementation with PA5380 on a plasmid (pGbdR) partially restored the ability to grow on all of these compounds as carbon and nitrogen sources. When the *P. aeruginosa* PA14 ΔPA5380 mutant was grown in minimal medium with glucose, the growth rate was similar to that of the wild-type reference strains (Table 2).

Based on the inability of the ΔPA5380 strain to grow on GB or DMG, we predicted that the PA5380 gene is a transcriptional activator of genes involved in GB and DMG catabolism. To test this hypothesis, the transcript levels of the *dgcA* and *gbcA* genes were analyzed in the wild-type and ΔPA5380 mutant backgrounds in media with choline, GB, DMG, or sarcosine (Fig. 5A). The *soxA* gene involved in sarcosine catabolism was also analyzed, and the *rplU* transcript was used as the control transcript. As shown in Fig. 5A, PA5380 is required for induction of *gbcA*, *dgcA*, and *soxA* in the presence of choline, GB, and DMG (13). The presence of sarcosine led to increased *soxA* transcript levels in both the wild type and the ΔPA5380 mutant. In choline-containing medium, mutants defective in PA5380 were able to induce *betB*, a gene in the *betABI* choline catabolic operon that is derepressed in the presence of choline (13, 36), with kinetics indistinguishable from those of the wild type (data not shown), suggesting that catabolism of choline to GB (Fig. 1) is not regulated by PA5380. Transcription of the PA5380 gene does not appear to be regulated by GB or DMG, as the PA5380 transcript was detected in cells grown on pyruvate, GB, DMG, and sarcosine (Fig. 3) and did not change significantly under these conditions as measured using quantitative real-time RT-PCR (data not shown). Deletion of PA5380 in *P. aeruginosa* strain PAO1 also eliminated the ability to grow on choline, GB, or DMG (data not shown), and, similar to observations for strain PA14, deletion of PA5380 prevented the accumulation of *gbcA* and *dgcA* transcripts in media with GB or DMG as the sole carbon source (data not shown).

To obtain insight into whether GB or DMG was capable of inducing PA5380-controlled genes, the induction of *gbcA*, *dgcA*, and *soxA* in the Δ*gbcA-gbcB* and Δ*dgcA* mutants was analyzed (Fig. 5B). When grown with GB, the mutant lacking *gbcA* and *gbcB* accumulated GB but not DMG (Fig. 4). If DMG was the sole inducer of PA5380-dependent transcription, GB would not induce GB or DMG catabolic genes in the Δ*gbcA-gbcB* strain. However, as shown in Fig. 5B, GB induced *dgcA* and *soxA* in response to both GB and DMG in the Δ*gbcA-gbcB* strain. In a similar experiment, it was observed that catabolism of DMG is not required for induction of GB

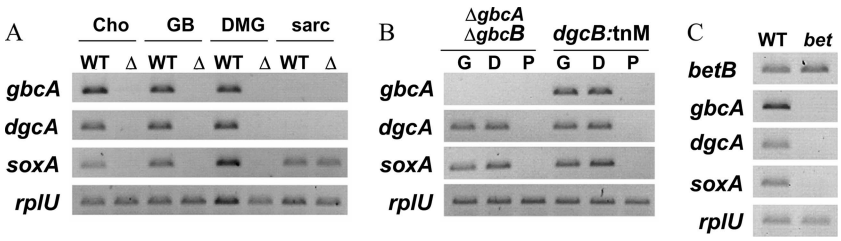

FIG. 5. Semiquantitative RT-PCR analysis of *P. aeruginosa* RNA after 2 h of induction by different compounds. The primer sets used in the PCR are indicated on the left. (A) Wild-type (WT) and Δ*gbdR* (Δ) cells induced with different carbon sources, including choline (cho), GB, DMG, and sarcosine (sarc). (B) Δ*gbcA-gbcB* and *dgcB*::Tn*M* cells induced with different carbon sources, including GB (G), DMG (D), and pyruvate (P). (C) Wild-type and *betA*::Tn*M* cells induced with choline.

catabolic genes by DMG. The *dgcB*::Tn*M* mutant strain could still induce the *gbcA*, *dgcA*, and *soxA* genes in response to either GB or DMG. None of the three genes (*gbcA*, *dgcA*, or *soxA*) was induced in medium with pyruvate (Fig. 5B). Together, these results suggest that both GB and DMG induce PA5380-dependent transcriptional activation.

To determine if choline could induce PA5380-dependent transcription of *gbcA*, *dgcA*, or *soxA*, we tested whether choline could stimulate expression of the transcripts in a *betA*::Tn*M* transposon mutant, which is unable to convert choline to GB (19, 29) (Fig. 5C). As shown in Fig. 5C, choline induced *betB* in both the wild type and the *betA* mutant background, but choline did not induce *gbcA*, *dgcA*, or *soxA* in the *betA* mutant despite the fact that PA5380 was present, indicating that these genes are not induced in response to choline. These data support the hypothesis that GB and DMG induce the *gbc*, *dgc*, and *sox* genes.

Based on these induction experiments and the finding that sarcosine does not induce the *gbc* and *dgc* transcripts in the wild type (Fig. 3), we suggest that PA5380-dependent gene activation is induced by both GB and DMG but not by choline or sarcosine. In addition, when the ΔPA5380 strain was provided with [1,2-^{13}C]choline as the sole carbon source, GB was the sole catabolite that accumulated after 9 h (Fig. 4E), supporting the role of PA5380 in transcriptional regulation of GB catabolic genes. Because our data suggest that PA5380 has a direct role in regulation of the GB catabolic pathway, PA5380 was designated *gbdR* (*g*lycine *b*etaine- and *d*imethylglycine-responsive *r*egulator).

Analysis of the role of PA3082 in GB catabolism in PAO1 and PA14. The PA3082 gene, as reported by Serra et al. (33), was predicted to encode a homocysteine-dependent GB methyltransferase that was required for growth of *P. aeruginosa* strain PRS on GB. To determine if mutants defective in PA3082 exhibited defects in growth on GB, the growth on GB of three PA14 transposon mutants with insertions in PA14-24290 (corresponding to PA3082) in the PA14 nonredundant library and one PAO1 transposon mutant with an insertion in PA3082 (Table 1) was examined. In addition, an in-frame deletion in PA3082 was generated in *P. aeruginosa* strain PA14. Growth analyses were performed using both MOPS minimal medium and the minimal medium described by Serra et al. (33). The growth studies showed that all five strains with independent defects in PA3082 grew in media with choline, GB, or DMG as the sole source of carbon with kinetics similar to those of wild-type strains (data not shown). When data were normalized using the *rplU* control transcript, semiquantitative analysis of the PA3082 transcript showed that there was no difference in its levels between cultures grown using GB or pyruvate as the carbon source (data not shown).

DISCUSSION

We screened the nonredundant PA14 transposon mutant library for mutants defective in growth on GB to identify genes involved in the GB catabolic pathway in *P. aeruginosa*. We identified a putative GB demethylase, encoded by *gbcA* and *gbcB*, based on phenotypic data that indicated that the Δ*gbcA-gbcB* mutant could not grow on GB but could use DMG as a carbon and nitrogen source (Table 2 and data not shown). Furthermore, when the the Δ*gbcA-gbcB* mutant was fed choline, GB accumulated in the cells (Fig. 4). The *gbcA* and *gbcB* transcript levels increased in response to GB and DMG in a GbdR-dependent manner. The transcript accumulation was mirrored in a proteomics analysis, in which the GbcB protein was shown to be more abundant in *P. aeruginosa* grown in the presence of GB as the sole carbon source (11). We also identified a putative DMG demethylase, encoded by the *dgcAB* genes, which is necessary for conversion of DMG to sarcosine. Experiments with ^{13}C-labeled choline confirmed that DMG accumulated in the *dgcB*::Tn*M* mutant strain. The *dgcAB* genes were also induced by GB and DMG in a GbdR-dependent manner. In addition, we identified a transcriptional regulator, GbdR, which is required for induction of the *gbc* and *dgc* genes in the presence of either GB or DMG and thus is required for growth on these substrates. Finally, our mutagenesis and NMR data verified the role of the predicted sarcosine oxidase (*soxBDAG*) genes in the catabolism of sarcosine to glycine in *P. aeruginosa*. In addition to the data presented here obtained using *P. aeruginosa* strain PA14, our studies also showed that *gbdR* is required for growth on choline, GB, or DMG and that *gbcAB* is required for growth on choline and GB but not for growth on DMG in *P. aeruginosa* strain PAO1.

While the enzymatic activities of the products of the *gbcA* and *gbcB* genes have not been examined yet biochemically, in silico analyses predicted that GbcAB may remove a methyl group from GB via a dioxygenase mechanism that yields DMG and perhaps formaldehyde, a known product of DMG oxidases from other bacteria (11, 24). Thus, these enzymes may represent a new type of GB catabolism that is distinct from the homocysteine-dependent pathway that has been described for other bacteria (2, 5).

The *dgcAB* genes are predicted to encode proteins necessary for the conversion of DMG to sarcosine based on the inability of four independent mutants with transposon insertions in the PA5396-PA5399 predicted operon (Fig. 2) and an in-frame *dgcA* deletion mutant to grow on DMG and based on the accumulation of ^{13}C-labeled DMG in *P. aeruginosa* Δ*dgcA* cultures. The inability of multiple *dgcA* rescue constructs to restore growth in the Δ*dgcA* strain (data not shown) may suggest that the stoichiometry of the complex is critical for its function or that the processing or assembly of a functional complex can occur only when the genes are cotranscribed. While characterization of the biochemical activities of the *dgcA* and *dgcB* gene products remains a subject for future research, these genes have homology to an oxidoreductase gene in *M. loti* (NP_108417) involved in *N*-methylproline demethylation which also involves cleavage of a C—N bond (7).

These studies also validated the role of the *soxAD* genes in catabolism of choline, GB, DMG, and sarcosine. Furthermore, the transcript analysis data shown in Fig. 5 suggest that there may be two mechanisms for transcriptional induction of the *sox* genes, one that is GbdR dependent and one that is GbdR independent. As shown in Fig. 5A, the *soxA* gene was induced in the presence of sarcosine in the wild-type strain and the Δ*gbdR* mutant, suggesting that there is a GbdR-independent mechanism for *soxA* induction in the presence of sarcosine. In the Δ*gbcA-gbcB* and Δ*dgcA* strains, in which GbdR is present, GB and DMG could still induce *soxA* despite the fact that sarcosine was not produced (Fig. 4). Furthermore, the Δ*gbdR* strain grew more slowly with sarcosine as the sole nitrogen source than either the wild type or the complemented Δ*gbdR* derivative (data not shown), suggesting that GbdR may participate in regulation of sarcosine utilization but is not necessary.

GbdR, which was found to be essential for transcriptional activation of the *gbc* and *dgc* genes, is similar to the ArgR transcription factor (59% similarity and 43% identity over 322 amino acids), which binds arginine and functions as an activator of arginine catabolic gene transcription in *P. aeruginosa* (26). We predict that, like ArgR, GbdR activates transcription at target loci only when it has bound GB or DMG. Transcript levels of *gbdR* did not change significantly during growth in GB or DMG as determined by semiquantitative (Fig. 3) or quantitative real-time RT-PCR methods (data not shown), suggesting that GbdR does not regulate its own transcription under these conditions.

We examined the genomic context of *gbdR* in *P. aeruginosa* and its closest homologs in a number of bacteria (http://cmr.tigr.org/). The genomic neighbors of *gbdR* in a variety of bacteria suggest that GbdR homologs might also regulate GB catabolism or uptake in other organisms. In *P. aeruginosa*, *gbdR* is in a region rich in genes involved in choline and GB catabolism (Fig. 2) (PA5372 to PA5421) and is adjacent to a group of genes involved in choline catabolism, including *betABI* (PA5372-PA5374), *betT* (PA5375), transporter genes (PA5376-PA5378), and *sdaB* (PA5379) (Fig. 2c). BetAB are required for oxidation of choline to GB, while BetI is a repressor of the *betABI* operon. PA5376-PA5378 is hypothesized to encode an inducible GB transporter, and SdaB is a predicted serine deaminase that converts serine to pyruvate. Similar genomic contexts have been observed for the *gbdR* homologues in *Pseudomonas entomophila*, *Pseudomonas putida*, *Pseudomonas fluorescens*, and *Pseudomonas syringae*. In *Ralstonia eutropha*, *Burkholderia mallei*, *Burkholderia pseudomallei*, *Burkholderia thailandensis*, *Burkholderia cenocepacia*, and *Burkholderia xenovorans*, the *gbdR* homologue is also proximal to the PA5376-PA5378 putative operon. In *Rhizobium etli*, the *gbdR* homologue (RHE PF00390) is adjacent to *gbcA* and *gbcB* homologues.

The PA3082 gene was previously reported to be required for GB catabolism in *P. aeruginosa* strain PRS (33). Our growth analyses with multiple validated transposon mutants and an in-frame deletion mutant showed that PA3082 is not required for GB catabolism in *P. aeruginosa* strains PAO1 and PA14. While this finding may reflect a strain-dependent difference in regulation of GB catabolism, we have some concerns about identification of this gene as a *gbt* (GB methyltransferase) sequence. Serra et al. (33) reported homology to sequences deposited under accession numbers AF293354 (the sequence for a *Streptomyces collinus* polyketide cluster), X91736 (the sequence for a *Chlamydomonas reinhardtii* ADP-glucose pyrophosphorylase), and AB024601 (which contains the sequences for three *P. aeruginosa* genes, including *dapD*, which encodes a tetrahydrodipicolinate succinylase; PA3660, which encodes a probable sodium/hydrogen antiporter; and *glnD*, which is predicted to encode a uridylyltransferase [PA3658]). Our analyses did not detect any ORFs in the PA3082 region with these homologies (33). To determine if other *P. aeruginosa* ORFs elsewhere in the genome had similarity to the sequences deposited under accession numbers AF293354, AB024601, and X91736, BLASTP and TBLASTN analyses were performed, and there were no matches with an E value less than 0.1 except for the accession number AB024601 sequence, which is a *P. aeruginosa* sequence that had perfect identity with itself. None of these sequences had any detectable similarity to any ORFs in the PA3082 region. Based on our growth data and the lack of similarity of any ORF in the PA3082 region to a sequence encoding a protein with any methyltransferase capability, we propose that the PA3082 region does not contain a gene related to GB catabolism in PAO1 and PA14, although our analyses do not exclude the possibility that PA3082 has a regulatory role during GB catabolism in *P. aeruginosa* strain PRS.

GB catabolic pathway in *P. aeruginosa*. We illustrated our model of GB catabolism in *P. aeruginosa* based on the data presented here and the model of Diab et al. (Fig. 6) (11). *P. aeruginosa* can access GB as a free molecule or form GB from the precursors choline and carnitine (16, 40). Choline and GB can be taken into *P. aeruginosa* cells by a constitutive transporter, as well as by high- and low-affinity inducible transport systems (22, 31), one of which is predicted to be the transporter encoded by PA5376-PA5378 (11). Once in the cytoplasm, choline binds to BetI, resulting in release of transcriptional repression at the *betIBA* promoter (28). We have shown that transcription of the *bet* operon in response to choline does not require GbdR. BetA and BetB catalyze the formation of GB from choline (35, 39). Thus, *P. aeruginosa* can generate GB, a potent osmoprotectant and an inducer of choline-related virulence factors (30), by catabolizing choline to GB without regulation by GbdR. We hypothesize that once free GB is in the cytoplasm, whether due to catabolism of choline or carnitine or due to GB uptake from the periplasm, the GB binds to GbdR. GbdR, when bound to GB, activates the transcription

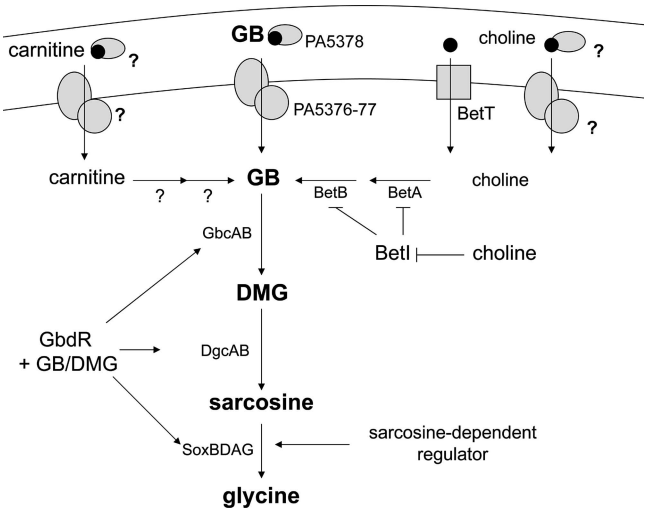

FIG. 6. Model of *P. aeruginosa* GB catabolism modified from the model of Diab et al. (11), with additions based on the data presented in this paper. BetA is the choline oxidase. BetB is betaine aldehyde dehydrogenase. BetI is the transcriptional repressor of the *betABI* locus. GbcA and GbcB are the predicted GB demethylase. DgcAB are the predicted DMG demethylase. SoxBDAG are the sarcosine oxidase complex members. Question marks indicate steps that have not been thoroughly evaluated in *P. aeruginosa*.

of *gbcA*, *gbcB*, *dgcAB*, and *soxBDAG*. Since DMG is also predicted to activate GbdR-dependent transcription, the production of DMG may further stimulate DMG and sarcosine catabolic genes. Once DMG is catabolized to sarcosine, an uncharacterized sarcosine-responsive transcription factor may contribute to induction of the *soxBDAG* operon (Fig. 5C).

Catabolism of GB is also under the control of two other regulatory systems in bacteria, catabolite repression (11) and osmotic regulation (35). In *P. aeruginosa*, glucose and succinate have both been shown to repress the production of the predicted GB catabolic protein GbcB and the DMG catabolism-associated protein encoded by PA5396, which is predicted to be part of the *dgcAB* operon (11). We have observed the same effect at the level of transcription for these genes (data not shown). The *gbdR* transcript was detected even under catabolite-repressing conditions; thus, if GbdR is involved in the regulation of GB catabolism during catabolite repression, the regulation may be in the form of translational regulation, post-translational modification, or occlusion of the GbdR binding site at one or more promoters. Osmotic stress can also repress bacterial GB catabolism (35), although this has not been demonstrated in *P. aeruginosa*. This regulatory network would ensure the stability of the intracellular GB pool during a prolonged period of osmotic stress. The role of GbdR and its regulation under osmotic stress conditions are not yet known.

Because *P. aeruginosa* can derive GB from catabolism of choline and carnitine, molecules that are abundant in host-associated environments, the catabolism of GB may be important during interactions with eukaryotic hosts. In addition, GB can induce expression of known and predicted virulence-related proteins (23, 30), which may impact *P. aeruginosa* survival and/or pathogenesis in the host. By controlling the catabolism of GB, GbdR may also play an important role during *P. aeruginosa* interactions with eukaryotes.

ACKNOWLEDGMENTS

This work was supported by National Institutes of Health grant P20-RR018787 from the IDeA Program of the National Center for Research Resources (to D.A.H.) and by a Ruth Kirchstein NRSA institutional fellowship awarded to the Department of Microbiology and Immunology, Dartmouth Medical School (grant T32 AI07519 supporting M.J.W.).

REFERENCES

1. **Altschul, S. F., T. L. Madden, A. A. Schaffer, J. Zhang, Z. Zhang, W. Miller, and D. J. Lipman.** 1997. Gapped BLAST and PSI-BLAST: a new generation of protein database search programs. Nucleic Acids Res. **25:**3389–3402.
2. **Barra, L., C. Fontenelle, G. Ermel, A. Trautwetter, G. C. Walker, and C. Blanco.** 2006. Interrelations between glycine betaine catabolism and methionine biosynthesis in *Sinorhizobium meliloti* strain 102F34. J. Bacteriol. **188:** 7195–7204.
3. **Bazire, A., A. Dheilly, F. Diab, D. Morin, M. Jebbar, D. Haras, and A. Dufour.** 2005. Osmotic stress and phosphate limitation alter production of cell-to-cell signal molecules and rhamnolipid biosurfactant by *Pseudomonas aeruginosa*. FEMS Microbiol. Lett. **253:**125–131.
4. **Boch, J., B. Kempf, and E. Bremer.** 1994. Osmoregulation in *Bacillus subtilis*: synthesis of the osmoprotectant glycine betaine from exogenously provided choline. J. Bacteriol. **176:**5364–5371.
5. **Boncompagni, E., M. Osteras, M. C. Poggi, and D. le Rudulier.** 1999. Occurrence of choline and glycine betaine uptake and metabolism in the family *Rhizobiaceae* and their roles in osmoprotection. Appl. Environ. Microbiol. **65:**2072–2077.
6. **Brown, A. D.** 1976. Microbial water stress. Bacteriol. Rev. **40:**803–846.
7. **Burnet, M. W., A. Goldmann, B. Message, R. Drong, A. El Amrani, O. Loreau, J. Slightom, and D. Tepfer.** 2000. The stachydrine catabolism region in *Sinorhizobium meliloti* encodes a multi-enzyme complex similar to the xenobiotic degrading systems in other bacteria. Gene **244:**151–161.
8. **Chlumsky, L. J., L. Zhang, and M. S. Jorns.** 1995. Sequence analysis of sarcosine oxidase and nearby genes reveals homologies with key enzymes of folate one-carbon metabolism. J. Biol. Chem. **270:**18252–18259.
9. **Cuin, T. A., and S. Shabala.** 2005. Exogenously supplied compatible solutes rapidly ameliorate NaCl-induced potassium efflux from barley roots. Plant Cell Physiol. **46:**1924–1933.
10. **de Rudder, K. E., C. Sohlenkamp, and O. Geiger.** 1999. Plant-exuded choline is used for rhizobial membrane lipid biosynthesis by phosphatidylcholine synthase. J. Biol. Chem. **274:**20011–20016.
11. **Diab, F., T. Bernard, A. Bazire, D. Haras, C. Blanco, and M. Jebbar.** 2006. Succinate-mediated catabolite repression control on the production of glycine betaine catabolic enzymes in *Pseudomonas aeruginosa* PAO1 under low and elevated salinities. Microbiology **152:**1395–1406.
12. **Diaz, M. R., and B. F. Taylor.** 1996. Metabolism of methylated osmolytes by aerobic bacteria from Mono Lake, a moderately hypersaline, alkaline environment. FEMS Microbiol. Ecol. **19:**239–247.
13. **Eshoo, M. W.** 1988. *lac* fusion analysis of the *bet* genes of *Escherichia coli*: regulation by osmolarity, temperature, oxygen, choline, and glycine betaine. J. Bacteriol. **170:**5208–5215.
14. **Kapfhammer, D., E. Karatan, K. J. Pflughoeft, and P. I. Watnick.** 2005. Role for glycine betaine transport in *Vibrio cholerae* osmoadaptation and biofilm formation within microbial communities. Appl. Environ. Microbiol. **71:**3840–3847.
15. **Kiene, R. P.** 1998. Uptake of choline and its conversion to glycine betaine by bacteria in estuarine waters. Appl. Environ. Microbiol. **64:**1045–1051.
16. **Kleber, H. P.** 1997. Bacterial carnitine metabolism. FEMS Microbiol. Lett. **147:**1–9.
17. **Kortstee, G. J.** 1970. The aerobic decomposition of choline by microorganisms. I. The ability of aerobic organisms, particularly coryneform bacteria, to utilize choline as the sole carbon and nitrogen source. Arch. Mikrobiol. **71:**235–244.
18. **Kuchma, S. L., J. P. Connolly, and G. A. O'Toole.** 2005. A three-component regulatory system regulates biofilm maturation and type III secretion in *Pseudomonas aeruginosa*. J. Bacteriol. **187:**1441–1454.
19. **Landfald, B., and A. R. Strom.** 1986. Choline-glycine betaine pathway confers a high level of osmotic tolerance in *Escherichia coli*. J. Bacteriol. **165:** 849–855.
20. **Leblanc, L., K. Gouffi, F. Leroi, A. Hartke, C. Blanco, Y. Auffray, and V. Pichereau.** 2001. Uptake of choline from salmon flesh and its conversion to glycine betaine in response to salt stress in *Shewanella putrefaciens*. Int. J. Food Microbiol. **65:**93–103.
21. **Liberati, N. T., J. M. Urbach, S. Miyata, D. G. Lee, E. Drenkard, G. Wu, J. Villanueva, T. Wei, and F. M. Ausubel.** 2006. An ordered, nonredundant library of *Pseudomonas aeruginosa* strain PA14 transposon insertion mutants. Proc. Natl. Acad. Sci. USA **103:**2833–2838.

22. **Lucchesi, G. I., C. Pallotti, A. T. Lisa, and C. E. Domenech.** 1998. Constitutive choline transport in *Pseudomonas aeruginosa*. FEMS Microbiol. Lett. **162:**123–126.
23. **Massimelli, M. J., P. R. Beassoni, M. A. Forrellad, J. L. Barra, M. N. Garrido, C. E. Domenech, and A. T. Lisa.** 2005. Identification, cloning, and expression of *Pseudomonas aeruginosa* phosphorylcholine phosphatase gene. Curr. Microbiol. **50:**251–256.
24. **Meskys, R., R. J. Harris, V. Casaite, J. Basran, and N. S. Scrutton.** 2001. Organization of the genes involved in dimethylglycine and sarcosine degradation in *Arthrobacter* spp.: implications for glycine betaine catabolism. Eur. J. Biochem. **268:**3390–3398.
25. **Neidhardt, F. C., P. L. Bloch, and D. F. Smith.** 1974. Culture medium for enterobacteria. J. Bacteriol. **119:**736–747.
26. **Park, S. M., C. D. Lu, and A. T. Abdelal.** 1997. Purification and characterization of an arginine regulatory protein, ArgR, from *Pseudomonas aeruginosa* and its interactions with the control regions for the *car*, *argF*, and *aru* operons. J. Bacteriol. **179:**5309–5317.
27. **Rahme, L. G., E. J. Stevens, S. F. Wolfort, J. Shao, R. G. Tompkins, and F. M. Ausubel.** 1995. Common virulence factors for bacterial pathogenicity in plants and animals. Science **268:**1899–1902.
28. **Rkenes, T. P., T. Lamark, and A. R. Strom.** 1996. DNA-binding properties of the BetI repressor protein of *Escherichia coli*: the inducer choline stimulates BetI-DNA complex formation. J. Bacteriol. **178:**1663–1670.
29. **Sage, A. E., A. I. Vasil, and M. L. Vasil.** 1997. Molecular characterization of mutants affected in the osmoprotectant-dependent induction of phospholipase C in *Pseudomonas aeruginosa* PAO1. Mol. Microbiol. **23:**43–56.
30. **Sage, A. E., and M. L. Vasil.** 1997. Osmoprotectant-dependent expression of *plcH*, encoding the hemolytic phospholipase C, is subject to novel catabolite repression control in *Pseudomonas aeruginosa* PAO1. J. Bacteriol. **179:**4874–4881.
31. **Salvano, M. A., T. A. Lisa, and C. E. Domenech.** 1989. Choline transport in *Pseudomonas aeruginosa*. Mol. Cell. Biochem. **85:**81–89.
32. **Schweizer, H. D.** 1993. Small broad-host-range gentamycin resistance gene cassettes for site-specific insertion and deletion mutagenesis. BioTechniques **15:**831–834.
33. **Serra, A. L., J. F. Mariscotti, J. L. Barra, G. I. Lucchesi, C. E. Domenech, and A. T. Lisa.** 2002. Glycine betaine transmethylase mutant of *Pseudomonas aeruginosa*. J. Bacteriol. **184:**4301–4303.
34. **Sleator, R. D., G. A. Francis, D. O'Beirne, C. G. M. Gahan, and C. Hill.** 2003. Betaine and carnitine uptake systems in *Listeria monocytogenes* affect growth and survival in foods and during infection. J. Appl. Microbiol. **95:**839–846.
35. **Smith, L. T., J. A. Pocard, T. Bernard, and D. Le Rudulier.** 1988. Osmotic control of glycine betaine biosynthesis and degradation in *Rhizobium meliloti*. J. Bacteriol. **170:**3142–3149.
36. **Styrvold, O. B., P. Falkenberg, B. Landfald, M. W. Eshoo, T. Bjornsen, and A. R. Strom.** 1986. Selection, mapping, and characterization of osmoregulatory mutants of *Escherichia coli* blocked in the choline-glycine betaine pathway. J. Bacteriol. **165:**856–863.
37. **Suzuki, H., R. Tamamura, S. Yajima, M. Kanno, and M. Suguro.** 2005. *Corynebacterium* sp. U-96 contains a cluster of genes of enzymes for the catabolism of sarcosine to pyruvate. Biosci. Biotechnol. Biochem. **69:**952–956.
38. **Vasil, M. L., D. P. Krieg, J. S. Kuhns, J. W. Ogle, V. D. Shortridge, R. M. Ostroff, and A. I. Vasil.** 1990. Molecular analysis of hemolytic and phospholipase C activities of *Pseudomonas cepacia*. Infect. Immun. **58:**4020–4029.
39. **Velasco-Garcia, R., L. Gonzalez-Segura, and R. A. Munoz-Clares.** 2000. Steady-state kinetic mechanism of the $NADP^+$- and NAD^+-dependent reactions catalysed by betaine aldehyde dehydrogenase from *Pseudomonas aeruginosa*. Biochem. J. **352:**675–683.
40. **Velasco-Garcia, R., C. Mujica-Jimenez, G. Mendoza-Hernandez, and R. A. Munoz-Clares.** 1999. Rapid purification and properties of betaine aldehyde dehydrogenase from *Pseudomonas aeruginosa*. J. Bacteriol. **181:**1292–1300.
41. **Welsh, D. T.** 2000. Ecological significance of compatible solute accumulation by micro-organisms: from single cells to global climate. FEMS Microbiol. Rev. **24:**263–290.
42. **West, S. E., H. P. Schweizer, C. Dall, A. K. Sample, and L. J. Runyen-Janecky.** 1994. Construction of improved *Escherichia-Pseudomonas* shuttle vectors derived from pUC18/19 and sequence of the region required for their replication in *Pseudomonas aeruginosa*. Gene **148:**81–86.
43. **White, R. F., L. Kaplan, and J. Birnbaum.** 1973. Betaine-homocysteine transmethylase in *Pseudomonas denitrificans*, a vitamin B_{12} overproducer. J. Bacteriol. **113:**218–223.