View metadata, citation and similar papers at core.ac.uk
brought to you by CORE
provided by European Online Journal of Natural and Social Sciences (ES)

Vol.3, No.3 Special Issue on New Trends in Architecture, Civil Engineering, and Urban Studies
ISSN 1805-3602

Design and Simulation to Create a Uniform Concentration Distribution in Fixed Bed Catalytic Reactor Using a Static Mixer

Alireza Pourparvaneh[1], Majid Mahdavian[1], Elham Bahramian[2*], Nooshin Yar Ahmadi[1], Fatemeh Yazdanifar[3]

[1]Department of Chemical Engineering, Quchan University of Advanced Technology, Quchan, Iran;
[2]Reserch Center of Oil and Fats, Kermanshah University of Medical sciences, Kermanshah, Iran;
[3] Department of Chemical Engineering, Shareza Branch, Islamic Azad University,Shareza , Iran;
*E-mail: Elham.bahramian68@gmail.com

Abstract

In fixed bed reactor, catalyst particles are in different sizes and are randomly scattered in bed which led to the non-uniform flow pattern. Thus, non-uniform access of reactants to the catalytic surfaces will lead to a sharp fall in overall performance of reactor. Pressure drop and high energy consumption are among other problems that experts and artisans are faced with it in terms of a fixed bed reactor. In his study, it is noted to the simulation of concentration distribution in two porous catalytic fixed bed reactors to investigate the heterogeneous catalysis of nitrogen, one of the reactors is equipped with a static mixer. According to the results, we can see in the reactor without using of static mixer, the reaction components are not evenly distributed within the catalyst bed. This is when the static mixer makes the uniform concentration distribution of particles in the catalyst bed before entering particles to the catalyst bed. So it can be concluded. The use of a small static mixer or a few baffles in fixed bed catalytic reactor, in addition to stable and uniform concentration distribution of the catalyst bed and reduce dead space, as well as the highest purity of the material produced in the catalyst bed, the system performance will be increased as much as 20 percent.

Keywords: catalyst reactor, fixed bed, static mixer, computational fluid dynamics

Introduction

Checking the catalyst topic was a sensitive and important issue that has attracted the interest of many scientists and engineers. Catalyst virtually used in oil refining and almost all the oil materials in the process are prepared by catalytic reactions (Sano, 2005). Catalysts were known for first time in the world in 1909, when Ostward was awarded the Noble prize. There years later, this honor was given to Sabatier. In decade of Arab oil embargo in 1973, and subsequent activities of OPEC made the importance of catalyst more explicit i.e the catalyst was considered a support for large amounts of energy (Zagal, Paulina, & Recio, 2013). The use of catalytic processes is the optimal may to economical convert of raw materials into desired products by high selecting, low production of waste materials and less energy consumption. Catalytic reactions and reactors, widely used in chemical processing of mass, petroleum, petrochemical, pharmaceutical and so on. At the same time advances in catalysis and chemical reactions engineering in 1930s, 1940s acted as the driving force for starting of catalytic reactors design. At the end of decade 1930, some articles on very fast reactions, an increase in the porous catalyst particle size and reduction of the catalyst activity in unit volume were released due to the influence of ultra-low particle (Kočí, 2010). In middle of 1940, chemical reactions engineering was developed in a separate branch of chemical engineering. The rapid expansion of the oil and industries petrochemical based in 1950s, 1960s, activated the growth of catalytic reactors. Denbigh, proposed the concept of ideal reactors and explained the importance of the reaction kinetics on the reactor performance. Scholarly, working

with several prominent researchers such as Denbigh, Danckwerts, levenspil, Houghen, Watson, laid the basis for modeling of catalytic reactors (Wordu & Igbonekwu, 2013).

Pouring the catalyst in the reactor, was one of an important parameters in catalytic reactors. Catalyst should not only be poured at one point then started to clear the pile because in this way, the grains are classified according to size and bed density is not the same everywhere. Powder and Small seeds gathered in the center of stack and large seeds gathered in the center of stack and large seeds rolls around of it, going operator on the ground can also cause non-uniform density. If the density of all over the bed is not uniform, the gas flow also will not be uniform in it and shall not be made the best use of the catalyst (Cai, 2013). In fixed bed reactors, catalyst particles are in different sizes and is randomly distributed within the bed which led to the non-uniform flow pattern. Thus, non-uniform access of reactants to the catalyst surfaces, leads to a sharp reduction in the overall performance of the reactor. Pressure drop and high energy consumption are of other problems that experts and artisans are faced with it in relation to the fixed bed reactor (Calis, 2001). Maximum utilization of the catalyst bed occurs when used reactor is well designed with careful consideration of the reaction parameters, this means that the conditions within the reactor must be controlled at any time and place, because only in this way, the highest conversion rate and selectivity can be expected from a reactor (Lunsford, 2000).

One way to achieve the highest conversion rate, selectivity and uniform distribution of density in fixed bed catalyst reactor is using of the static mixer. Static mixer is used for mixing gases, disperse gas in liquid or immiscible liquids. This device involves mixing ingredients in a cylindrical or square tube which can be with the diameter of 6 mm up to 6m. parts (components) of static mixer involves a series of blade that is made of metal or plastic types. A static mixer can produce 3 division flow pattern – radial mixing and returned flow at the time (Khinast, 2003).

Tajima et al, studied on the impact of the shape and geometry of the static mixer components in hydrate production. They used four static mixers with different geometry in this study, the design and manufacture of them also has been done by Noritake company (Tajima, Yamasaki, & Kiyono, 2005).

(MSM) static mixer: In this mixer, two parts of mixer are connected to each other at an angle of 0 degrees. Thus, there is no flow division in this kind of static mixer.

(RSM) static mixer: In this mixer, all the elements of mixer at an angle 180°, are twisted to the right side and therefore, there is no backflow at the point of contact between the components, in other words, there is no backflow.

(SSM) static mixer: In this spiral mixer, all ingredients with angle of degrees twisted to the right side. Then, there is no flow division in this static mixer (Galdi, 2011). In this study, SSM static mixer is used.

The equations governing the issue

In this study, Navier – stokes equations in a steady state, describes the fluid flow inside the reactor. Brinkman equations also governs in the porous catalyst bed. Equation (1) describes Navier – stokes equation for fluid flow in steady state (Tajima, Yamasaki, & Kiyono, 2005).

$$(u.\nabla)u = -\nabla p + \nabla.\mu(\nabla u.(\nabla u)T) - \alpha(\varepsilon)u \qquad (1)$$

In equation (1), ρ density (kg/m3), μ Viscosity (Pa.s), u speed (m/s) and the coefficient (ε), indicates the distribution of the porous catalyst that is described by the equation (2) (Bartholomew & Farrauto, 2011).

$$\alpha(\varepsilon) = \frac{\mu}{Da.L^2}.\frac{q(1-\varepsilon)}{q+\varepsilon} \qquad (2)$$

In equation (2), (Da) Darcy number, L length (m) and q is dimensionless parameter. Whenever in equation (2) α=1 ε =1, equation (1) becomes normal Navier – stokes. As a result, the reaction rate becomes zero. Fickian method is also considered to describe the penetration term in mass transfer with a presumed low phase density of solvent. Mass transfer of components van be gained by equation (3) (Incropera, 2013).

$$\nabla.(-D_i \nabla c_i) = R_i - u.\nabla c_i \tag{3}$$

In equation (3), ci shows the concentration ($mol/m3$), D_i shows penetration rate ($m2$/s), Ri shows component rate of i ($mol/m3.s$). u also shows the fluid velocity (m/s). Since the reaction only occurs in catalyst bed, for describing the reaction kinetics equations, zero reaction Term is considered. The reactions are also irreversible and the speed of action expressed as follows:

$$R_A = -k_f.c_A.c_B \tag{4}$$

$$R_B = -k_f.c_A.c_B \tag{5}$$

$$R_C = k_f.c_A.c_B \tag{6}$$

In equations (4), (5), (6), kf, the reaction rate constant that is dependent on the temperature and material kind and is described by the Arrhenius equation (Levenspiel, 1999).

$$k_f = A_f.\exp(-\frac{E_a}{RT}) \tag{7}$$

In equation (7), Af, frequency factor (m3.s/mol), Ea Energy activity (J/mol), R gas Constant (J/mol,K), T temperature (K).

Boundary conditions

In describing the equations of boundary conditions at the entrance, according to equation (8), speed profile is impressive.

$$u = u_{in} \tag{8}$$

In output, we apply the pressure conditions. In transferring of mass, the concentration governs in a fixed state in input according to the equation (9).

$$c_i = c_{i0,inlet} \tag{9}$$

In output, mass transfer conditions governs according to equation (10).

$$(-D_i \nabla c_i) = 0 \tag{10}$$

According to equation (10), we can see that the concentration gradient in output border is negligible. In other borders, insulation condition is considered according to equation (11).

$$(-D_i \nabla c_i + c_i u) = 0 \tag{11}$$

Statement of problem

In this study, we plan to investigate the catalytic bed reactor that a chemical reaction occurs in it. The purpose of this study is to see whether there is an access to maximum of reaction speed by a pressure difference across the bed and finally, it is the right solution for optimal design of catalytic reactors in order to achieve the highest level of concentration distribution in the catalyst bed. First, the simulation of catalyst reactor of porous fixed bed has been considered in which the static mixer is not used, then the porous fixed bed catalyst reactor simulation with a static mixer has been considered in order to study the homogenous decomposition of Nitrogen. These reactors have two input which component A with concentration 1[mol/m3], from one input and component B with concentration 7 [mol/m3] of another input are imported reactor. In one reactor, after the arrival of fluids to reactor, components A and B are imported the catalyst bed and in another reactor, after the arrival of fluids, components A and B are imported to a static mixer for whole mixing. Before

entering the components into the catalyst bed, the diameter of the reactor party reduced in order to create a pressure drop. Due to created pressure drop, the speed of components increases. The reaction rate in the bed, determines the porous catalyst distribution. When the catalyst amount is high, the flow rate will be low but if the amount of catalyst is less, flow rate will be high. However, in this case, the conversion rate will be low. In bed of catalyst by impact of reaction, the components A and B are used and component C is produced, then, passing of components from the catalyst bed by increasing the diameter of the reactor, partially offset by a drop in pressure. It should be noted that components A and B are in speed 10 [cm/s]. The temperature also considered constantly 400 [k]. It should be noted the reaction in the reactor only occurs in the fixed catalyst bed. Finally, the components A, B, C leaves of output of the reactor. The penetration coefficient of two components A and B, 1×10^{-6} [m2/s] is also considered. The following reaction takes place in the porous catalyst bed:

$$A + B \rightarrow C \tag{12}$$

In figure (1), the designed geometry can be seen. Figure (3-a) is related to catalyst reactor without mixing and figure (3-b) is related to the catalytic reactor equipped with the static mixer.

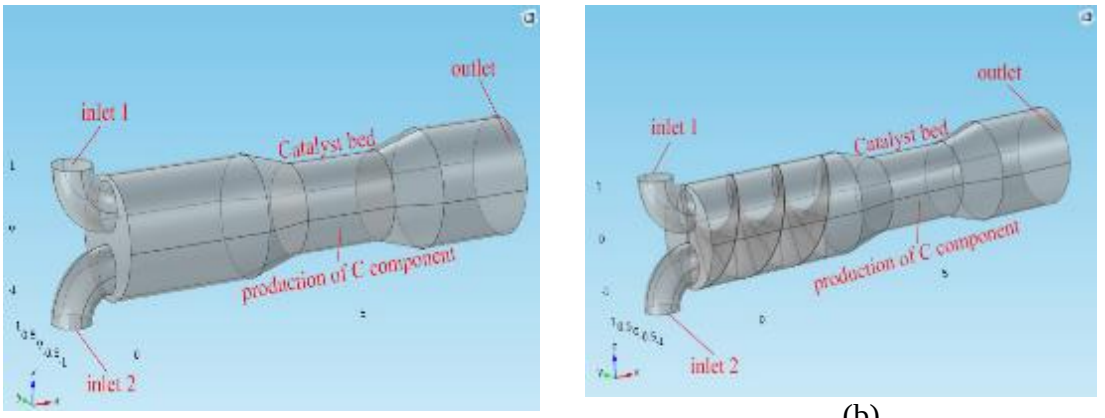

(a) (b)

Figure 1: a) catalytic reactor without mixing b) catalytic reactor equipped with static mixer In this geometry also used of triangular mesh with more density near the boundaries of the system. In figure (2) you can see mesh related to both reactors.

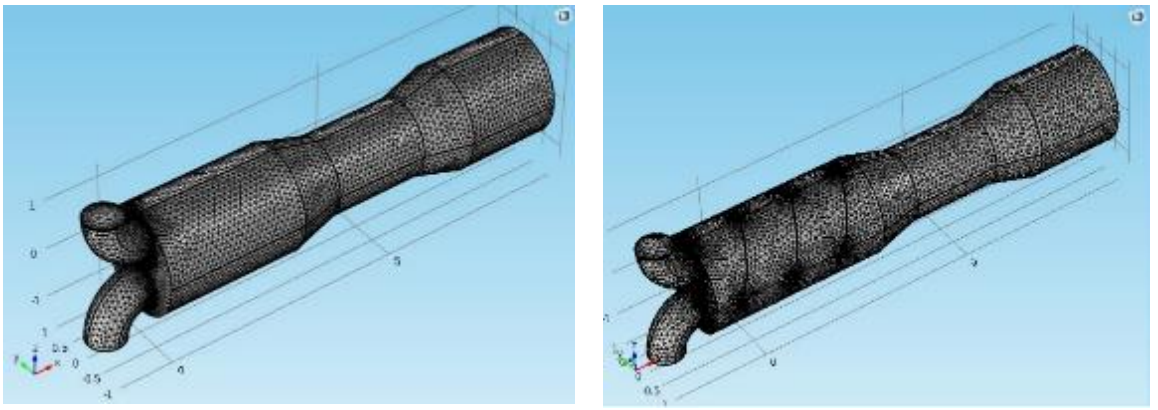

(a) (b)

Figure 2: a) catalytic reactor mesh without mixing and b) catalytic reactor mesh equipped with a static mixer

Results and discussion

In figure (3), you can quickly see the changes of speed field. Figure (3-a) is related to catalytic reactor without mixer and figure (3-b) is related to catalytic reactor equipped with static mixer.

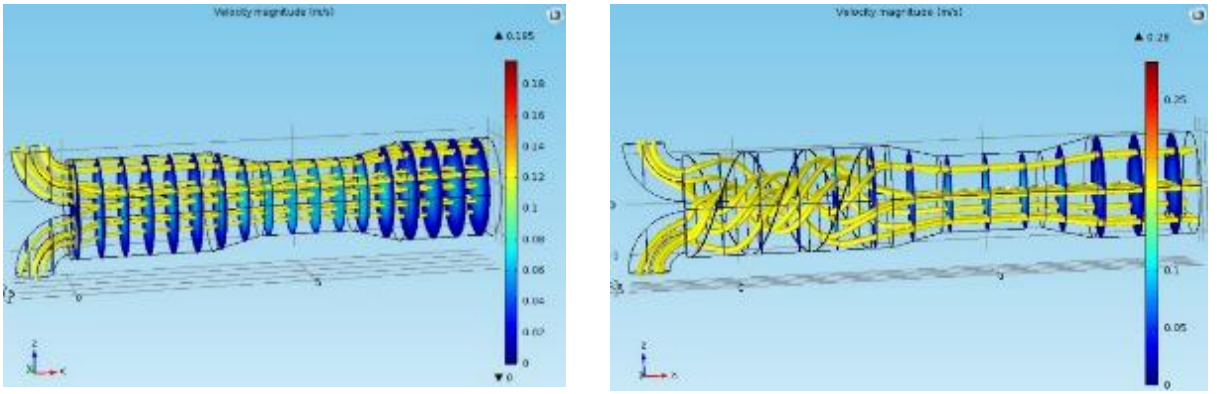

(a) (b)

Figure 3: a) catalytic reactor without mixer b) catalytic reactor equipped with static mixer

According to figure (3), it is observed at the beginning of the reactor, we have the highest speed. It is also seen that in stable and porous catalyst bed, the speed field is almost homogeneous. In figure (4), you can see the changes of speed field from the beginning to the end of a reactor equipped with static mixer into slices perpendicular to the direction of flow.

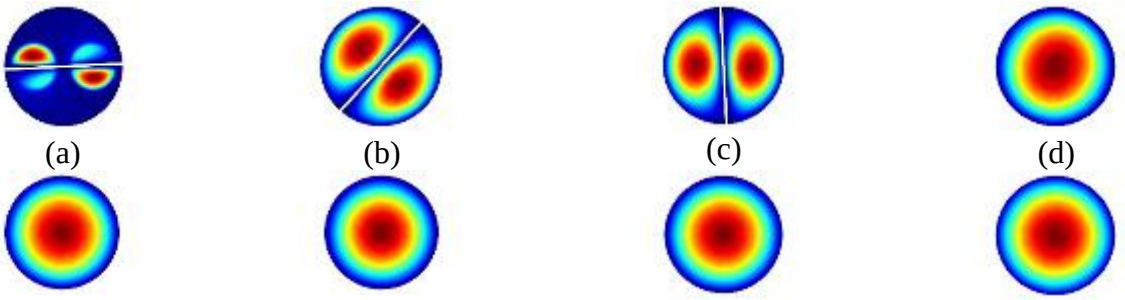

(a) (b) (c) (d)

(e) (f) (g) (h)

Figure 4: Changes of speed field from the beginning to the end of the reactor into slices perpendicular to the flow with the space of 1/5 m of every cut

According to figure (4), it can be seen that after entering components to the catalyst bed, the speed is stable and uniform up to end of the reactor. In figure (5), you can see the changes of pressure. Figure (5-a) is related to the reactor catalyst bed without mixer and figure (5-b) is related to catalytic reactor equipped with static mixer.

According to figure (5), it is seen that when the fluids in the catalyst bed move due to the porosity and the permeability of catalyst, the pressure is reduced and a sharp drop in the out of bed can be seen. It should also be noted that before entering the fluids to catalyst bed, a pressure drop due to lack of damage to catalyst caused by high pressure of fluids, that after, passing of fluids through the catalyst bed, by increasing the diameter of the reactor, the initial pressure drop is compensated. Besides that, the reactor equipped with a static mixer, has the pressure drop greater than the reactor without mixer.

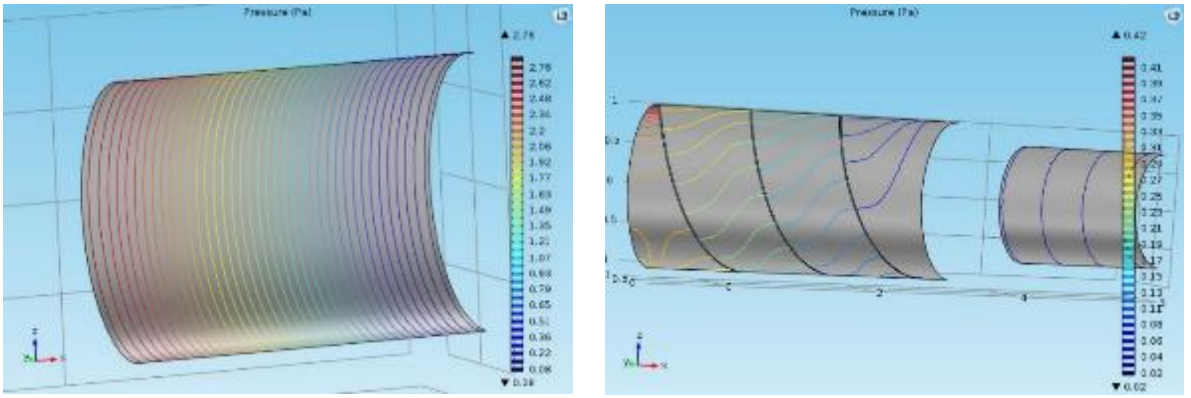

(a) (b)

Figure 5: a) the changes of pressure in reactor catalyst bed without mixer b) the changes of pressure the catalytic reactor equipped with static mixer

In figure (6), we can see the changes of the concentration from component A. figure (6-a) is related to catalytic reactor without mixer and (6-b) is related to catalytic reactor equipped with static mixer.

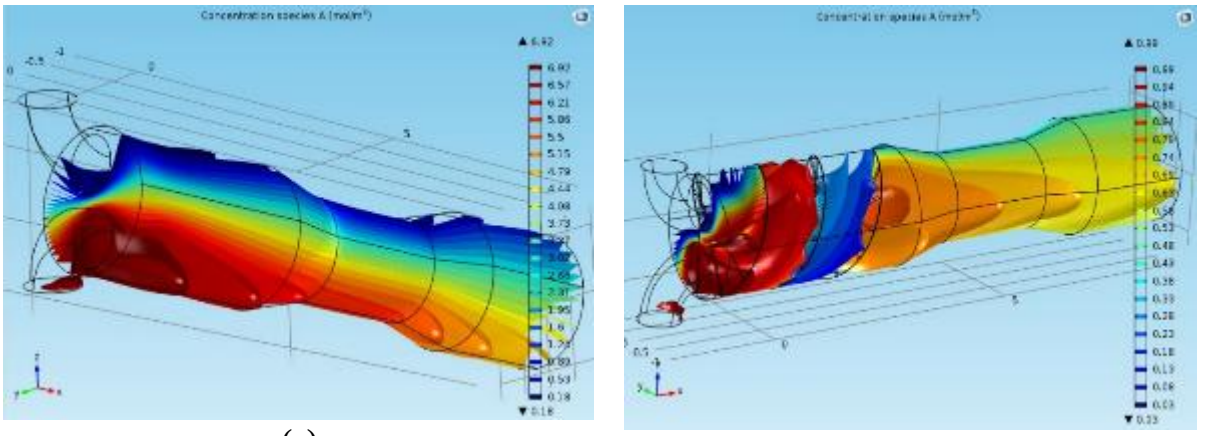

(a) (b)

Figure 6: The changes of component A, a)catalytic reactor without mixer b) catalytic reactor equipped with static mixer

According to figure (6), it can be seen that concentration of component A has little catalysis speed and there is almost until output of reactor. It also found that the distribution of concentration in porous catalyst bed is in uniform way. It is noted that component A is entered to reactor from lower input (entrance)

In figure (7), the changes of concentration of component B can be seen. Figure (7-a) is related to catalyst reactor without mixer and figure (7-b) is related to catalyst reactor equipped with static mixer.

According to figure (7), it can be seen that concentration of component B is catalyse very fast. It also found that distribution of concentration in porous catalyst bed is related to reactor without static mixer that is not done correctly and in a way that in reactor equipped with static mixer, this distribution of concentration is more uniform and catalyst bed so-called has less dead space. It is noted that component B is entered reactor from high input.

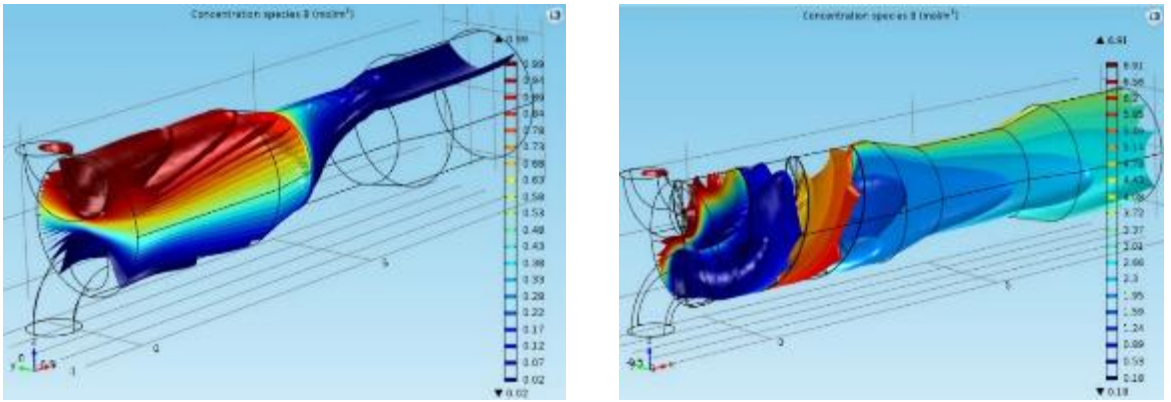

(a) (b)

Figure 7: a) changes of concentration of component B from catalytic reactor without mixer , b) catalytic reactor equipped with static mixer

In figure (8), the changes of concentration from component B can be seen from first to the end of reactor according to penetration coefficient of two component 1×10^{-6} [m2/s] in a way cutting perpendicular to the direction of flow.

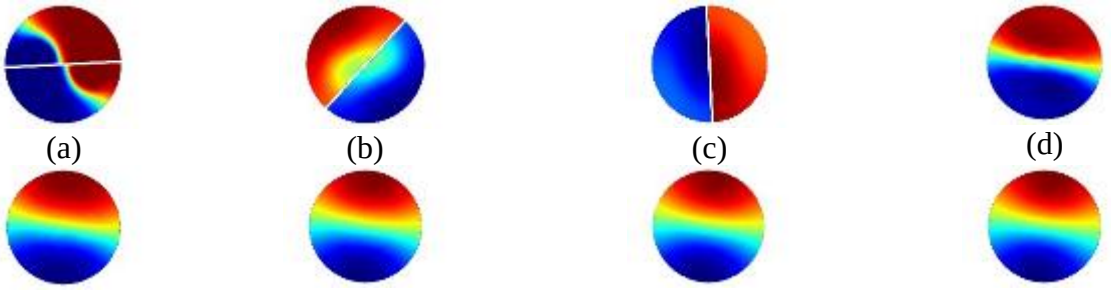

(a) (b) (c) (d)

(e) (f) (g) (h)

Figure 8: Concentration distribution of component B from first to the end of reactor in a way cutting perpendicular to the direction of flow with space of every cut 1/5m and penetration coefficient of two component 1×10^{-6} [m²/s]

According to the figure (8) it can be found that after entering to catalyst bed (from figure (e)), concentration changes due to penetration coefficient is considered and have stable and uniform amount. In figure 9, the concentration changes of components A, B and C is seen depending on the length of the reactor with a static mixer.

According to figure 9, it can be seen that component A with concentration 7 [mol/m3]enters the reactor. Then by progressing during reactor, the concentration of it reduced and the amount of it in the end of reactor gets to 3 [mol/m3]also component B with concentration 1 [mol/m3] enters the reactor (b). As can be seen, when component B comes to catalyst bed, its concentration decreases. So, its concentration approaches zero at the bottom of the reactor. This means that component B producing of component C is used completely in catalyst bed. If the mixer is not used in the reactor, this amount doesn't approach to zero and component B is not used completely as a system limiting material.According to the concentration changes of component C, it is seen that at the beginning of the reactor, this component is not there and after the reaction of components A, B in catalyst bed, component C is produced (c).

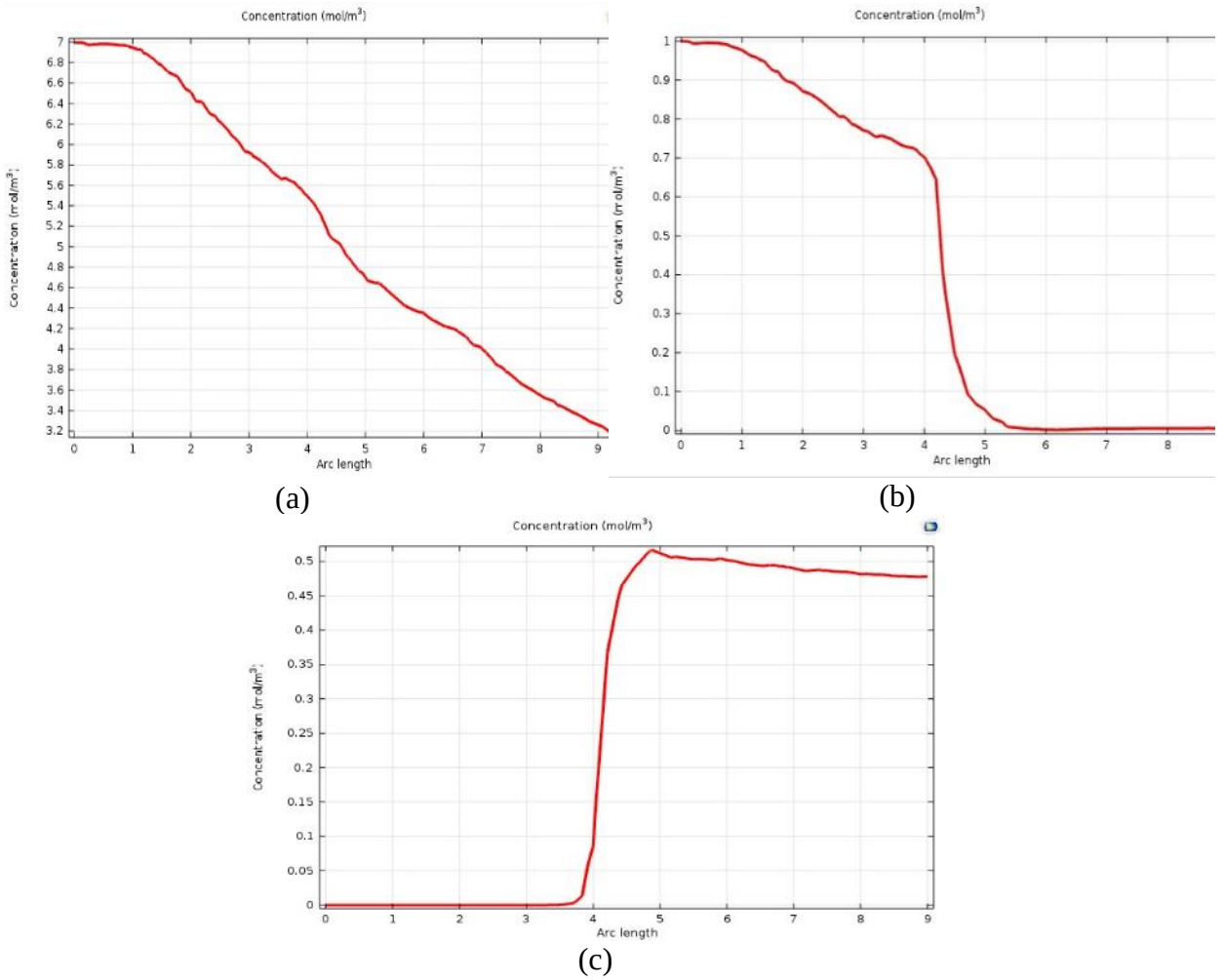

Figure 9: a) the concentration changes of component A, b) the concentration changes of component B, c) the concentration changes of component C

Conclusion

Maximum of utilization from the catalyst bed, occurs when the used reactor is designed correctly and by exact consideration of reaction parameters. This means that the conditions within the reactor must be controlled at any time and place. In fixed bed reactors, the catalyst particles have different sizes and are randomly scattered in bed that leads to create non-uniform flow pattern, thus, non-uniform access of reactants to the catalytic levels, leading to a sharp reduction in overall performance. Pressure drop and high energy consumption are among other problems of these reactors. In this study, it's been paid to the simulation of concentration distribution in two porous catalytic reactor with fixed bed rector, that one of reactor is equipped with static mixer. According to the result, it can be found, static mixer before entering the components to catalyst bed, causes the uniform distribution of particles (components) in catalyst bed. So, we can conclude that in designing of bed catalytic reactors to achieve a uniform distribution of concentration during the catalytic bed, before entering of components to catalytic bed, a small static mixer or a few baffles are used that in addition to complete use and distribution of stable concentration in catalytic bed and reduction of catalyst dead space, the produced material in catalyst bed has also the highest purity and system performance increases to 20 percent.

References

Bartholomew, C. H., & Farrauto, R.J. (2011). Fundamentals of industrial catalytic processes. John Wiley & Sons.

Cai, Ch. (2013). Efficient transformation of parahydrogen spin order into heteronuclear magnetization. The Journal of Physical Chemistry B, 117 (5), 1219-1224.

Calis, H. P. A. (2001). CFD modeling and experimental validation of pressure drop and flow profile in a novel structured catalytic reactor packing. Chemical Engineering Science, 56 (4) , 1713-1720.

Galdi, G.P. (2011). An Introduction to the Mathematical Theory of the Navier-Stokes Equations: Steady-State Problems, 501, Springer.

Gross, E. (2012). Control of selectivity in heterogeneous catalysis by tuning nanoparticle properties and reactor residence time. Nature chemistry, 4 (11), 947-952.

Incropera, F. P. (2011). Fundamentals of heat and mass transfer. John Wiley & Sons.

Khinast, J. G. (2003). Mass-transfer enhancement by static mixers in a wall-coated catalytic reactor. Chemical Engineering Science , 58 (3), 1063-1070.

Kočí, P. (2010). Multi-scale modeling of reaction and transport in porous catalysts. Chemical Engineering Science, 65 (1), 412-419.

Levenspiel, O. (1999). Chemical reaction engineering. Industrial & Engineering Chemistry Research, 38 (11), 4140-4143.

Lunsford, J.H. (2000). Catalytic conversion of methane to more useful chemicals and fuels: a challenge for the 21st century. Catalysis Today, 63 (2),165-174.

Sano, Y. (2005). Two-step adsorption process for deep desulfurization of diesel oil. Fuel, 84 (7), 903-910.

Tajima, H., Yamasaki, A., & Kiyono, F. (2005). Effects of mixing functions of static mixers on the formation of CO2 hydrate from the two-phase flow of liquid CO2 and water. Energy & fuels, 19 (6), 2364-2370.

Wordu, A. A., & Igbonekwu, L.I.(2013). Computer-Aided Design of Industrial Catalytic Reactor. International Journal of Engineering and Technology, 3 (1).

Zagal, J.H., Paulina C., & Recio, J. (2013). Matching the Formal Potential of the Catalyst with the Reversible Potential of the Reaction. A New Way of Optimizing Electrocatalysis. 223rd ECS Meeting.