Scholars' Mine

Masters Theses

Student Theses and Dissertations

1970

The development and analysis of a system to measure transient angular velocity

David Lawrence Persson

Follow this and additional works at: https://scholarsmine.mst.edu/masters_theses

Part of the Mechanical Engineering Commons

Department:

Recommended Citation

Persson, David Lawrence, "The development and analysis of a system to measure transient angular velocity" (1970). *Masters Theses*. 7020.
https://scholarsmine.mst.edu/masters_theses/7020

This thesis is brought to you by Scholars' Mine, a service of the Missouri S&T Library and Learning Resources. This work is protected by U. S. Copyright Law. Unauthorized use including reproduction for redistribution requires the permission of the copyright holder. For more information, please contact scholarsmine@mst.edu.

THE DEVELOPMENT AND ANALYSIS OF A SYSTEM TO MEASURE TRANSIENT ANGULAR VELOCITY

by

DAVID LAWRENCE PERSSON, 1947-

A

THESIS

submitted to the faculty of the

UNIVERSITY OF MISSOURI - ROLLA

in partial fulfillment of the requirements for the

Degree of

MASTER OF SCIENCE IN MECHANICAL ENGINEERING

Rolla, Missouri

1970

T2329
c.I
55pages

Approved by

(advisor)

183324

ABSTRACT

A measuring system was built to provide a D. C. voltage which was proportional to the angular speed of a particular rotating shaft under question. The measuring system developed has a time constant of approximately .00365 seconds. The final measuring system was developed after trying various other means which proved unsatisfactory.

The final device developed would be quite satisfactory in a wide variety of applications.

ACKNOWLEDGEMENTS

The author wishes to acknowledge Dr. V. J. Flanigan for his direction and advice in the development of this measuring system.

TABLE OF CONTENTS

	Page
ABSTRACT	ii
ACKNOWLEDGEMENTS	iii
LIST OF FIGURES	v
I. INTRODUCTION	1
II. BACKGROUND MATERIAL	3
III. DEVELOPMENT OF MEASURING SYSTEM	7
A. Transfer Function Approach	7
B. Fluctuating Current Approach	10
C. The Final System	23
IV. CONSTRUCTION OF THE FINAL PORTABLE MEASURING SYSTEM	25
V. FINAL TESTING	27
VI. DISCUSSION AND CONCLUSIONS	30
VII. RECOMMENDATIONS	34
BIBLIOGRAPHY	37
APPENDICES	38
A. TEST DATA OF LOW FREQUENCY METER-CONVERTOR	39
B. TEST DATA OF CURRENT FLUCTUATION INPUT	40
C. TEST DATA OF FILTER ADDITION	41
D. TEST DATA FOR FINAL SYSTEM CALIBRATION CURVE	42
E. TOTAL ITEMIZED COST	43
F. MATHEMATICAL PERFORMANCE TESTS	44
A. Ramp Response	45
B. First Order Response	46
G. LIST OF EQUIPMENT USED	48
H. CALIBRATION OF THE PORTABLE DEVICE	49
VITA	50

LIST OF FIGURES

Figure		Page
1.	Electrical Circuit of a Fixed Field D. C. Motor	8
2.	Analog Diagram for Solving the Equation Defining the Operation of a Fixed Field D. C. Motor	11
3.	Block Diagram Representation of Frequency to D. C. Convertor	13
4.	Low Frequency Meter-Convertor	15
5.	Patching Diagram to Test Low Frequency Meter-Convertor	17
6.	Sinewave Calibration Curve of the First Low Frequency Meter-Convertor	18
7.	Patching Diagram for Current Fluctuation Input	19
8.	Input Current Fluctuation Calibration Curve	20
9.	Patching Diagram for Addition of Filter to the Low Frequency Meter-Convertor	21
10.	Calibration Curve for Addition of Filter to the Low Frequency Meter-Convertor	22
11.	Circuit Schematic of Final Device	26
12.	Final System Calibration Curve	28
13.	Step Response of Final System	29
14.	Block Representation of an Analog Frequency Measuring System	36

I. INTRODUCTION

In the field of controls, if a variable is to be accurately controlled it must be accurately measured. If a variable is to be accurately measured, the measuring system must be able to define the steady state values as well as follow dynamic speed changes. Even more important is that the measuring device should apply no load on the particular system in question. If the output of the measuring system relative to the input is delayed, the control system will be acting on a delayed signal and will generally overshoot. Therefore; the measuring system should possess the following characteristics: be able to define the steady state values; respond to dynamic speed changes and show little or no signs of loading.

The measuring system presented in this thesis hopes to fullfill the previous criterion when angular speed is the variable to be controlled. There are systems developed and manufactured which will measure constant angular speed accurately without excessively loading the system, but they have been lacking in dynamic ability. Dynamic measuring ability is a very important problem when one considers the fast response of present-day servo motors. For example, Honeywell's Model HSM-30 servomotor is capable of dead stop to 1200 RPM in .001 second. For a servo motor such as this, dynamic measuring ability is very important. It can be seen that any loading would greatly affect the performance of the servo motor since it is capable only of small outputs.

The object of this thesis is to develop an angular velocity measuring system which will have these qualities and once the system is developed to build and test a portable model. The calibration and

operation of the portable device will be provided, so it can be set up for different speed ranges.

II. BACKGROUND MATERIAL

A review of the basic angular velocity measuring systems will now be presented with regard to measurement of angular velocity of a high performance servo motor.

D. C. Tachometer Generator

The D. C. Tachometer Generator, probably the most widely used system generates a voltage proportional to the velocity of a moving conductor through a fixed field[3*]. This device has good steady state accuracy and has an advantage in that it continuously monitors the speed of the rotating shaft in question. It has the disadvantage in that it will not respond to rapid speed changes.

The loading of the device can be very large when the device is initially engaged due to the inertia of the armature of the D.C. tachometer generator. But one must remember that on systems which are fairly massive, or capable of high outputs, this starting inertia torque or the steady state torque needed to balance the friction of the brushes and bearings is insignificant. For example, if a D.C. tachometer generator is applied to a small servo motor, which is running at a constant speed, the servo motor will respond to the change in load and generally slow down. But if the same tachometer would be applied to a diesel engine the speed change from the actual system before engaging and after, would be very small.

Another point that should be considered is that response and loading of the system being measured are related. If a speed change occurs and

---

**Refers to listings in bibliography.*

it is desired to trace the actual speed, the armature of the tachometer also has to change speed. If the armature changes speed, a torque had to be applied to accomplish this change of speed. The magnitude of the torque is the product of angular acceleration and inertia of the armature (neglecting damping factors). This torque is provided by the device being measured. Therefore the device, which is changing speed, would take a longer time to accomplish this change in speed than if the load of the tachometer was not present. The final point being that the tachometer does not have to respond to as rapid a speed change if it is connected because it has slowed the system down (relative to what it was before connection of the tachometer).

The D. C. tachometer would not be a suitable choice to measure the speed of a high performance servo motor mainly because of the loading present. The D. C. tachometer's armature would probably have as much inertia as the servo motor's armature. Therefore the servo motor would have to supply twice as much torque (neglecting friction) to have the same speed change which would definitely reduce the response of the servo motor.

Counter Timer Device

In the events per unit time type of measurement, the number of revolutions, or some multiple of the number of revolutions, is tallied over a certain time period. Then to obtain the angular velocity the number of counts is divided by the timed interval and multiplied by an appropriate constant. It is obvious that this value is the average speed over the time interval and does not provide any information about the fluctuation of speed about this average value. To notice any change in average speed requires the waiting of the time interval. The main

advantage to this type of speed measurement would be if one wanted the average speed over a long period, as in an engine test.

The number of revolutions can be counted by the use of a magnetic pick up which pulses a particular number of times for each revolution of the shaft in question. These pulses can then be tallied by an electronic counter. Some electronic counters have automatic timing and resetting to produce the number of counts per unit time without the use of a clock which the operator would have to monitor as he started and stopped the counter. The main difference in counter timers is the method by which the pulse or count is obtained. Another popular way to obtain a pulse is to use a light source and photocell.

The steady state accuracy of the device is high and is generally used to calibrate other speed measuring equipment. The loading of the system is minimum, but it has no ability to record a change of speed. In fact if the angular velocity of the shaft being measured has a constant level plus a superimposed sinusoidal, the sinusoidal (if of high frequency) would go unnoticed and the device would display only the constant level. Therefore this device is unacceptable because of the poor transient response.

The difference in the mechanical counter timer is that the pick up is mechanical. For example, the hand speed indicator has a mechanism which sweeps a dial around proportional to the number of revolutions it has seen. Another part of the mechanism clutches and then declutches after a certain time period has elapsed. This device is similar in response characteristics to the magnetic and photoelectric type devices. The main difference is that the hand speed indicator requires more energy withdrawal from the system. So again this device is not acceptable.

Strobotac

The strobotac, another popular type of velocity measuring device, has very high accuracy in the measurement of steady state speed. The strobotac emits a flashing light, the flash rate being adjustable, and freezes the motion of the object. From the frequency of the flashing, the speed of the object can be determined.

This device is very poor for measuring changing speeds, because the operator has to change the flash setting in order to keep the object stationary. This can be accomplished for slow changing speeds but not for faster changing speeds. Although the accuracy is high and the loading is nil, this device is inferior in measuring speed changes of high performance servo motors because of the slow response.

Mechanical Tachometer

Mechanical tachometers are devices which typically change angular motion into some displacement. For example, in the flyball governor, the displacement of the flyballs from the center of rotation is a measure of the speed. Another example would be the speedometer in an automobile. Usually these types of speed indicators are slow responding, damping out any high frequency speed fluctuations. The outflow of energy to the device is typically large so this rules out this device when measuring speed changes of a high performance servo motor.

Other Speed Measurement Devices

Other measuring systems, such as the high speed camera or light beam methods are unapplicable in that film or photo sensitive paper has to be developed which involves a waiting period. The measuring system sought is one which continuously gives an output rather than one in which a time lapse occurs.

III. DEVELOPMENT OF MEASURING SYSTEM

A. Transfer Function Approach

The background material has eliminated all of the commonly used devices for measuring angular velocity. None of these devices would combine accuracy, response and minimum loading when considered for measuring the speed of a small, high performance servo motor.

The approach to meet these requirements was to consider only servo motors of the fixed field type. Examining the electrical circuit of a fixed field D.C. motor (see figure 1) and summing voltage about the circuit, remembering that the back emf is proportional to angular velocity, the following equation can be written:[1]

$$E_i = RI_i + L(dI_i/dt) + K_v\dot{\theta} \qquad (1^*)$$

where E_i = input voltage (volts)

I_i = input current (amp)

R = armature resistance (ohms)

L = armature inductance (henries)

K_v = back emf constant (volt-sec/radian)

and $\dot{\theta}$ = angular velocity of armature.

Assuming zero initial conditions, using Laplace transforms, and simplifying yields

$$\frac{I_i(s)}{E_i(s) - K_v\dot{\theta}(s)} = \frac{1}{R + Ls} \; . \qquad (1)$$

The torque applied by the motor is proportional to the current passing through the armature, leading to the following equation:

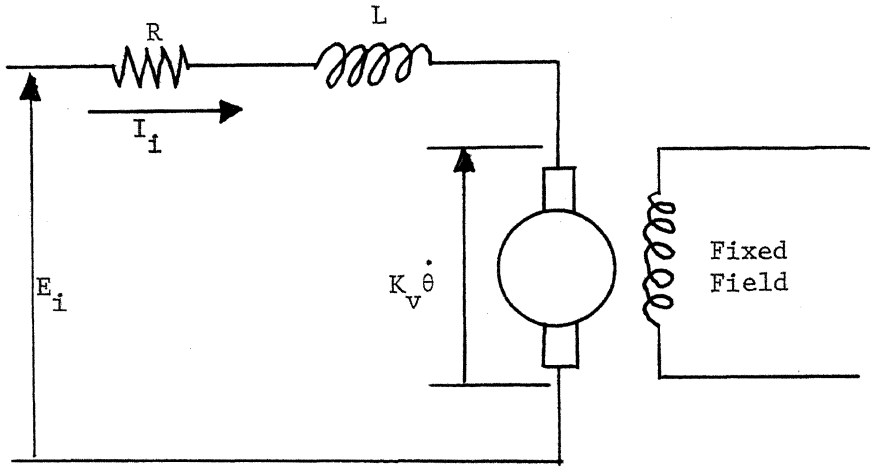

Figure 1 Electrical Circuit of a Fixed Field D.C. Motor

$$\text{Sum of the torques} = J * \ddot{\theta} = K_t * I_i + B * \dot{\theta}$$

$$K_t * I_i = J * \ddot{\theta} + B * \dot{\theta}$$

In Laplace notation

$$K_t * I_i(s) = (Js + B)\ \dot{\theta}(s) \quad . \tag{2}$$

Solving for $I_i(s)$ and substituting into the first equation yields

$$\frac{\dot{\theta}(s)}{E_i(s)} = \frac{K_t}{(R+L*s)*(B+J*s) + K_t*K_v} \ ; \tag{3}$$

where K_t = torque constant (ft-lb/amp)

J = inertia of armature and load combined (ft-lb-sec^2)

B = damping coefficient of armature and load combined (ft-lb-sec)

and $\ddot{\theta}$ = angular acceleration (radians/sec^2).

It can be seen from this equation that the angular velocity is dependent on output load characteristics. Since the output load characteristics are variables, this equation would not be easy to develop into a measuring system. But if we consider equation (1)* and solve for $\dot{\theta}$:

$$\dot{\theta} = \frac{E_i - RI_i - L\ dI_i/dt}{K_v} \quad . \tag{4}$$

If R, L, and K_v are known and the input current and input voltage measured, operation according to this equation would yield the velocity. The measurement of transient input current and input voltage can be easily obtained. In order to determine $\dot{\theta}$, equation (4) must be solved and this can be accomplished by using operational amplifiers, as shown in figure 2.

The only difficulty in this approach is that experimentation showed that the constants R and K_v were actually nonlinear parameters. The resistance of the armature was very temperature dependent. The back emf constant was nonlinear with respect to speed. At high speeds the back emf constant would tend to saturate. An attempt was not made to determine the inductance of the armature because the non-linearity in the other constants ruled out this particular measurement system.

Another difficulty which would deter this approach is that most direct current fixed field motors have a dead band. That is, a certain level of input voltage would have to be reached before the motor would start.

This type of system would have the advantage in that only the input current and voltage would have to be measured. Dynamic measurement of the current could be obtained by merely placing a small shunt resistor in series with the motor and measure the voltage drop across the shunt. Then the input current and voltage could be represented as voltage which could easily be operated on to solve for $\dot{\theta}$. But because of the non-linearities and the dead band this system was abandoned.

B. Fluctuating Current Approach

The next phenomena was revealed quite by accident. An experiment was set up to determine the transfer function constants of the motor. The current was being measured by a voltage drop across a small shunt resistor in series with the motor. Upon displaying the current trace on the scope, it was noticed that the signal was very fuzzy. Considering that noise was being picked up, a shielded cable was fabricated to carry the signal but the trace was still not sharp. Switching to A.C. input

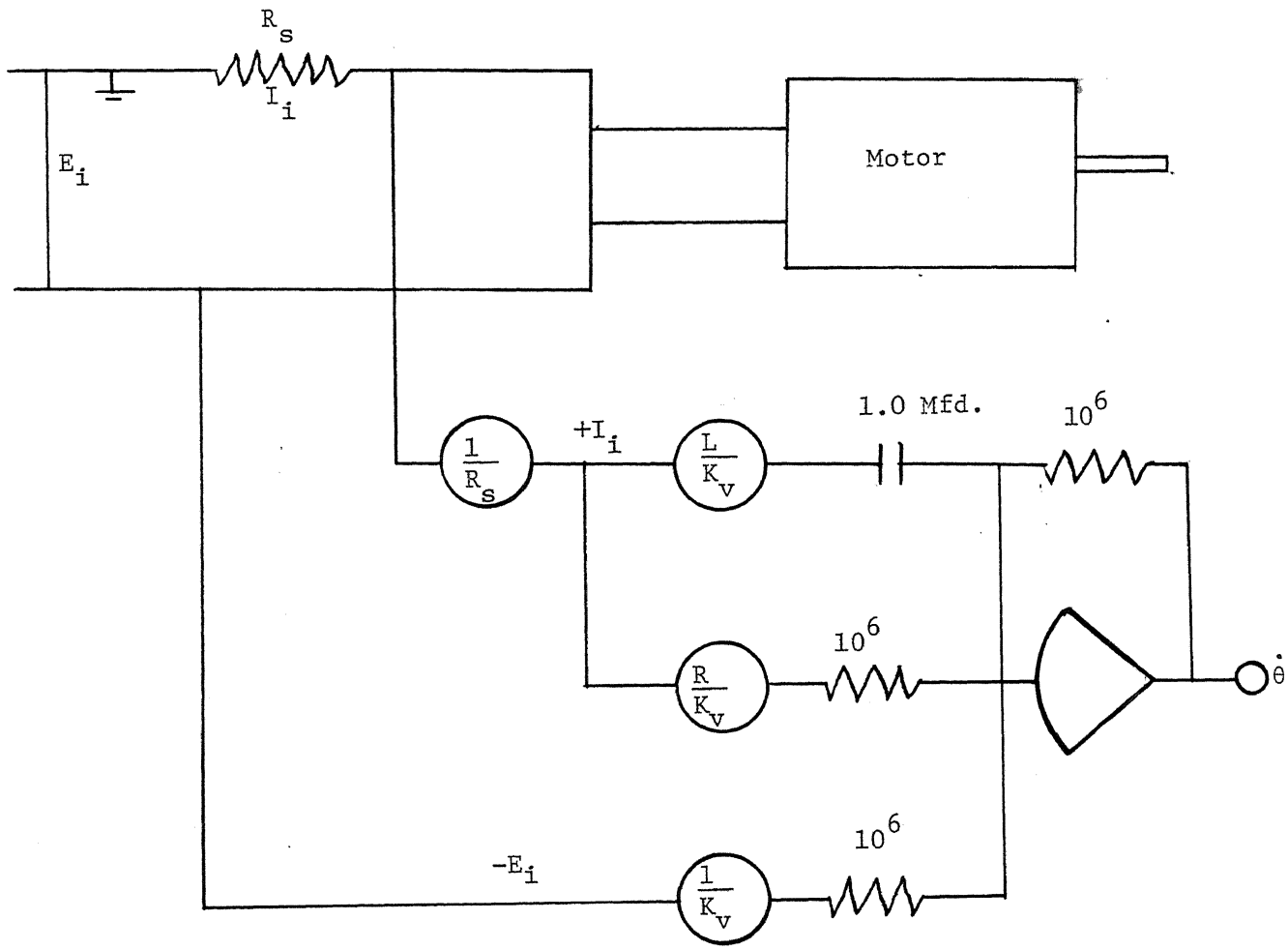

Figure 2 Analog Diagram for Solving the Equation Defining the Operation of a Fixed Field D.C. Motor

and going to a lower scale proved that the noise was not 60 cycle in nature. As the motor speed was increased, the frequency increased. Upon further investigation, the frequency of the trace and the motor speed was directly related. The amplitude of the trace would change at a given speed due to load changes but at a given speed there was a certain frequency. So the problem became measuring the frequency of current fluctuation and converting it to a signal representative of speed.

The explanation of why the current fluctuates can best be explained by the fact that at certain positions of the armature, more than one winding is present across the brushes. Since more than one winding in parallel would draw more current, the current increases. Then when only one winding is present the current would decrease. Thus, the frequency is dependent on angular velocity. For a given speed, if the armature has many poles the frequency will be higher than if the armature has fewer poles.

The first measuring system attempting to measure the frequency of fluctuation about the average current level will now be discussed. The basic system is represented in block form (see figure 3). In the first stage the blocking of the D.C. level could be obtained by placing a capacitor in series with the input. After filtering and amplification have occured, the signal should have the form Ao sinwt. Upon rectification and filtering the output should be proportional to Ao.

If the Ao sinwt was differentiated, rectified and filtered the output would be proportional to Ao w. If this output is divided by the signal proportional to Ao, the final output would be proportional to w. Similarly if the Ao sinwt was integrated, rectified and filtered the output would be proportional to Ao/w. Then if this signal is divided into the signal proportional to Ao, the final output would be proportional to w.

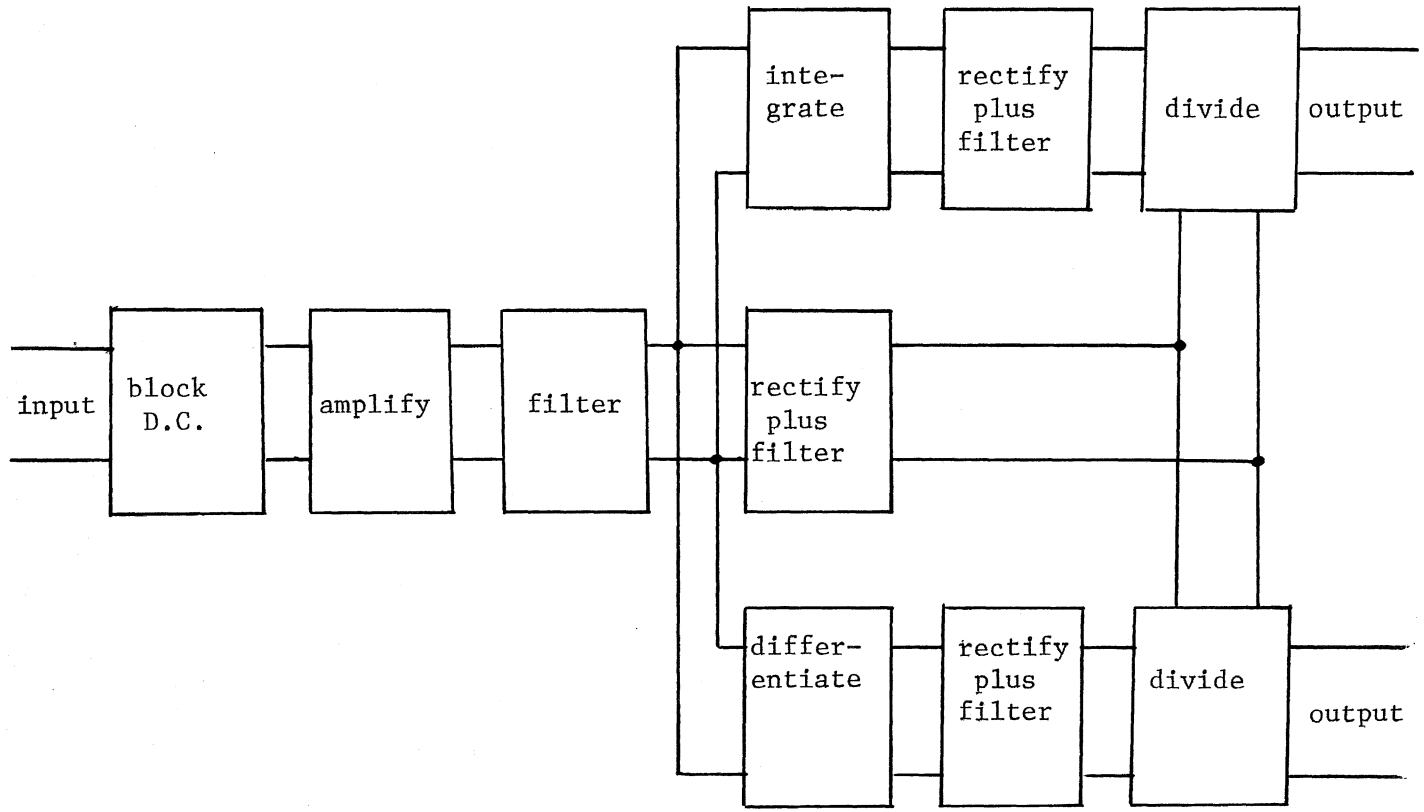

Figure 3 Block Diagram Representation of Frequency to D.C. Convertor

There are many problems associated with this type of measuring system. First, the input is not a perfect sine wave. Secondly, if differentiation is chosen this in itself picks up noises and if integration is chosen, any D.C. level present will tend to grow and saturate the system. Thirdly, if differentiation is chosen at high frequencies Ao times w will be very large tending to saturate the system and if integration is chosen Ao/w at high frequencies will be small, then dividing a large number by a small number will also tend to saturate the system. Finally the division needed at the output is very slow to respond, tending to damp out any speed changes. Therefore for the previously stated reasons, this system was abandoned although it is very economical and simplified.

The next system tried was a low frequency meter-converter (see figure 4). This circuit exploits the high open loop of an operational amplifier to generate an output voltage which is closely proportional to the frequency of the incoming signal over amplitudes ranging from ±1.5 volts to ±50 volts. If the input is large enough to be limited by the input clamping diodes, an essentially constant voltage is maintained across them. This clamped voltage drives a constant current through the 4.7 ohms input resistor, causing a current of the same magnitude to flow through the feed back capacitor, producing an output ramp that increases in magnitude until bounded. The input resistors and clamping diodes also protect the amplifier against excessive input voltage, enabling it to handle a wide dynamic range of input signals.

The peak to peak amplitude of the trapezoidal output waveform of the first operational amplifier is a function only of the bounding feed back arrangement. The slope of the rise and fall is essentially constant.

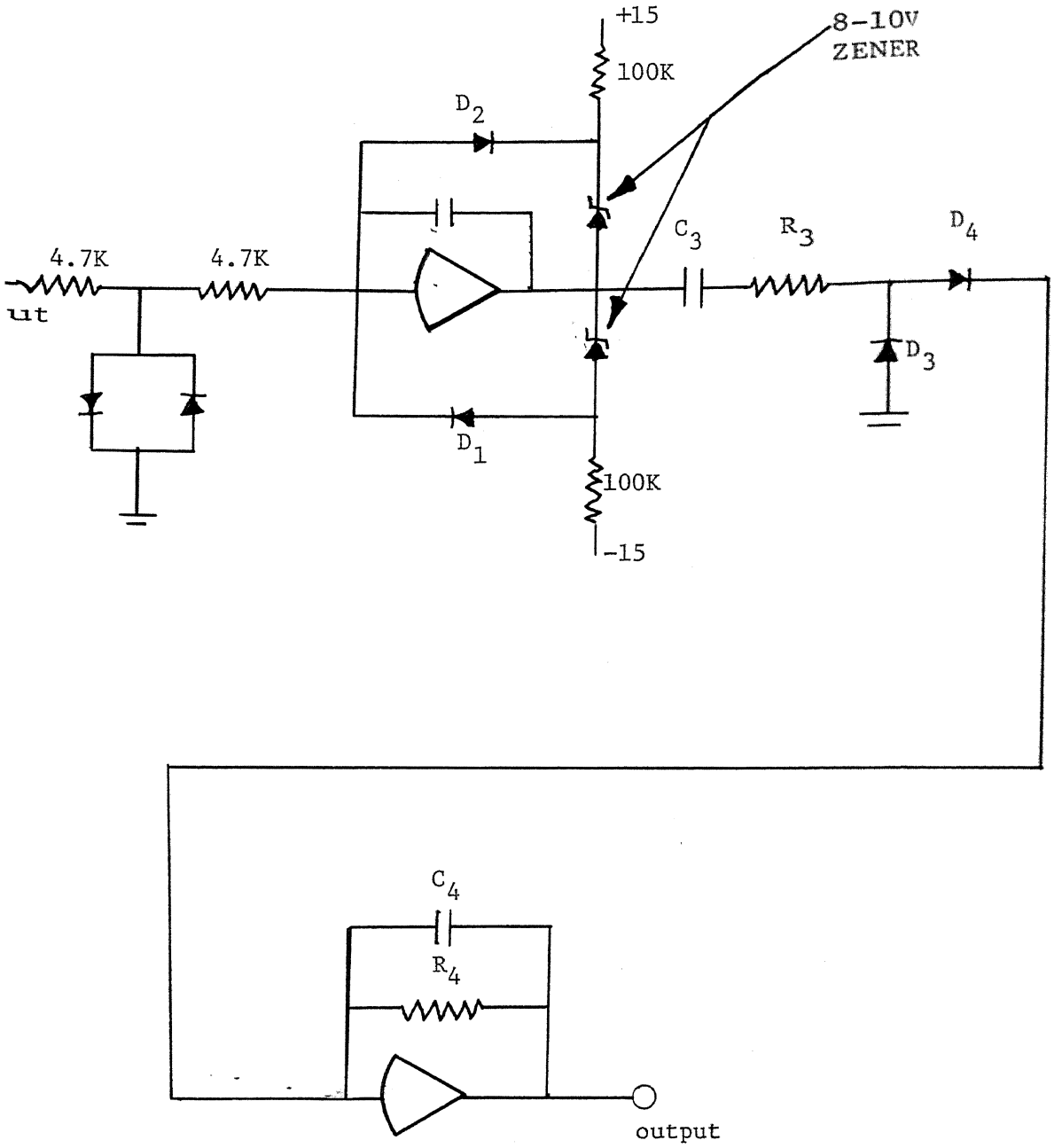

Figure 4 Low Frequency Meter-Convertor

Therefore as the frequency increases, the ratio of ramp time, to bound time (flat portion) increases and the waveform approaches, in the limit, a triangular wave.

The trapazoidal waveform produces spikes or pulses of current through C_3 and R_3. Diodes D_4 and D_3 determine that only positive current flows into the summing junction of the output amplifier. Whatever current flows into the summing junction must flow in the feed back arrangement C_4 and R_4 which smoothes the incoming spikes of current and converts it into an output voltage. At low frequency the second amplifier sees spikes of current of a certain height, but far apart and at high frequencies, the spikes of the small height are seen but are closer together. Since the output smooths the spikes (tries to take the average value) at low frequencies, the output is a small voltage and at higher frequencies, the output voltage is higher. Therefore, the output is proportional to frequency alone once the component values are chosen[2].

This system was then tested on an analog computer (Systron Donner SD-80) using the component values shown in figure 5. The input was a very smooth signal from a frequency generator. The results were then plotted on figure 6. The results were very linear even at expanded scale at low frequency.

The next task was to see if the noisy signal of the voltage which represents the current would work. (Figure 7 was used and the results plotted on figure 8.) The original setup had to be modified because of the small input signal and the blocking of the D.C. component. The plotted results are not acceptable since it is very nonlinear.

The next system tried was identical to the previous except that a filter which attenuated above 5000 Hertz was added. (Figure 9 was used,

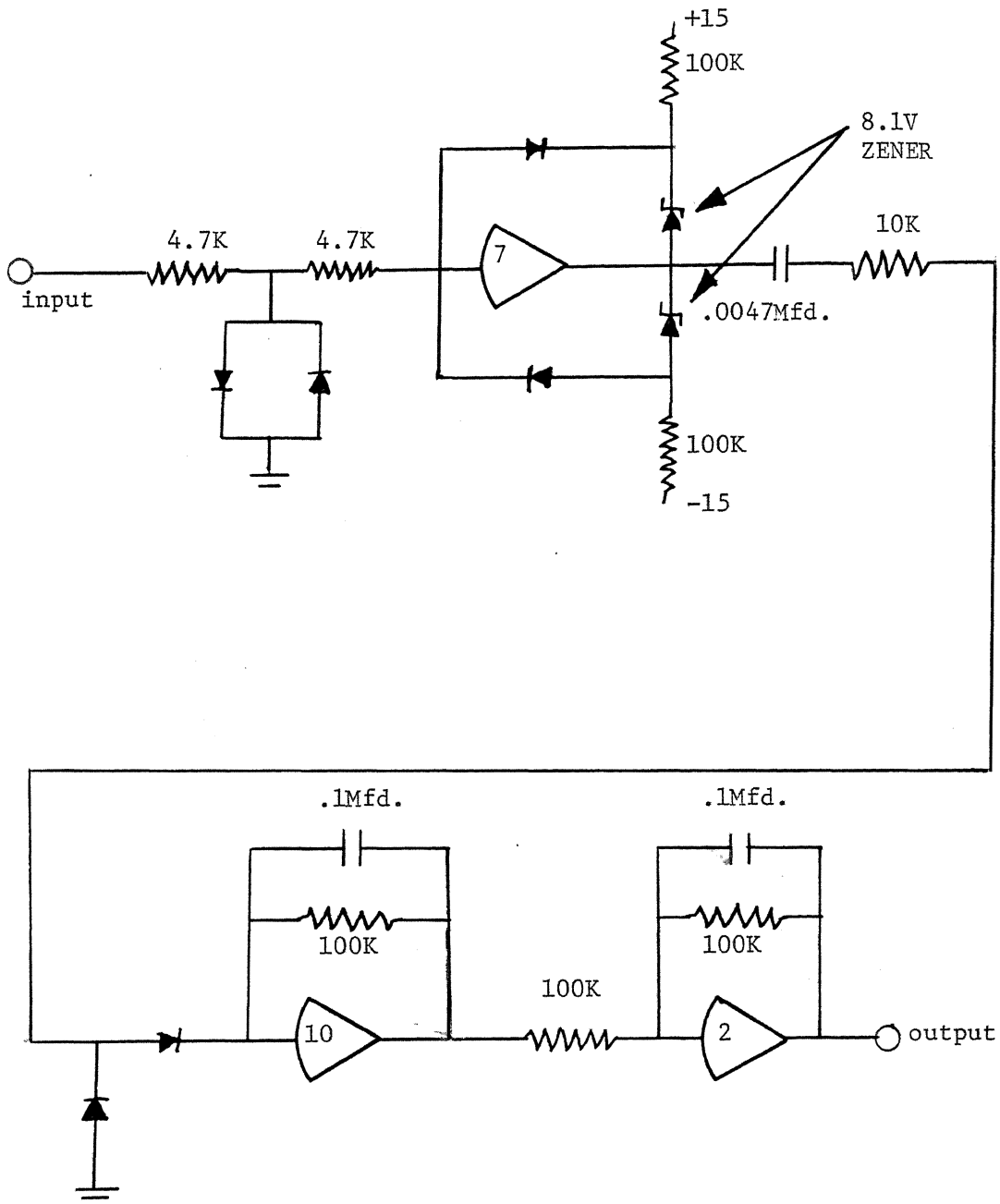

Figure 5 Patching Diagram to Test Low Frequency Meter-Convertor

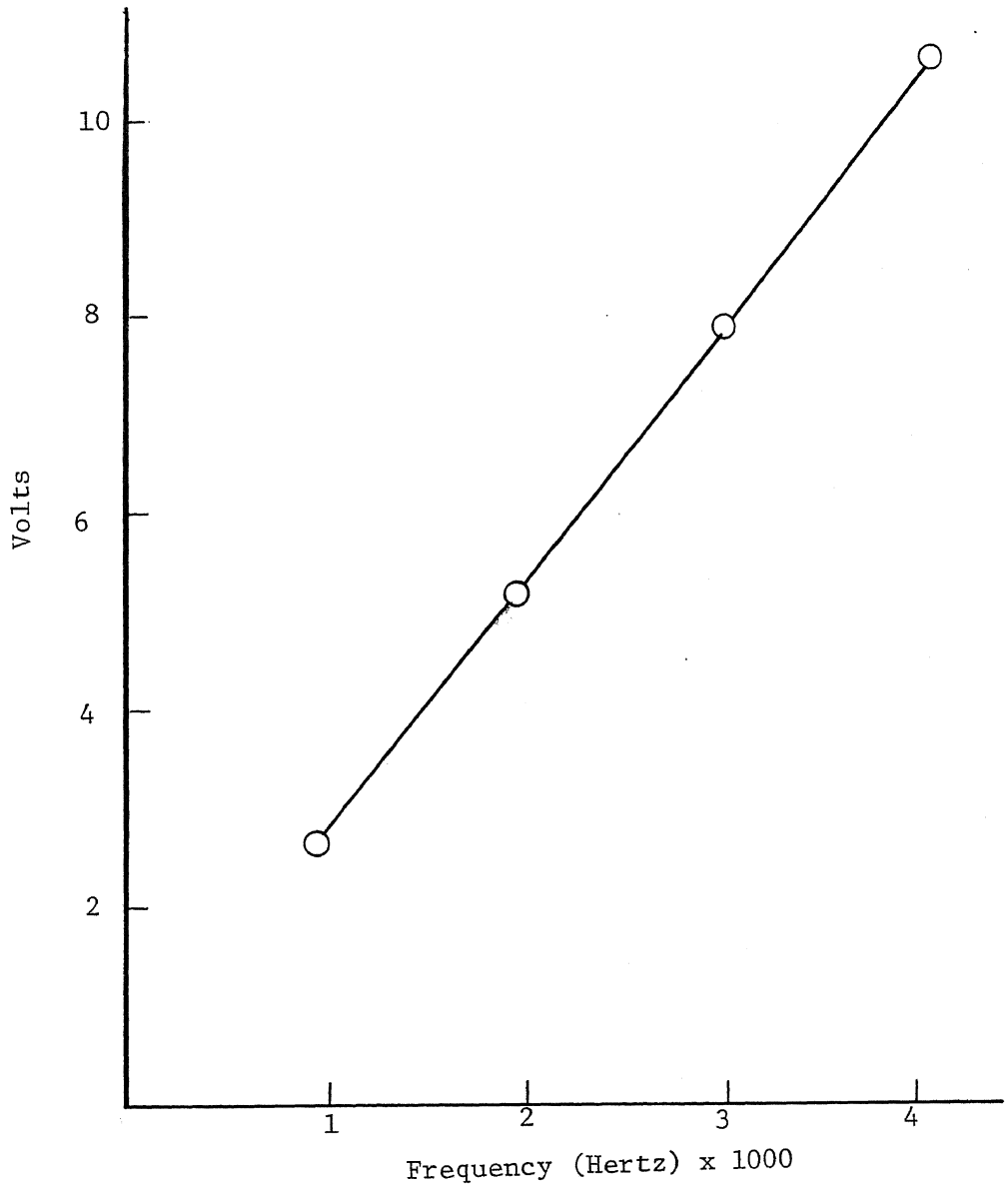

Figure 6 Sinewave Calibration Curve of the First Low Frequency Meter-Convertor Tried

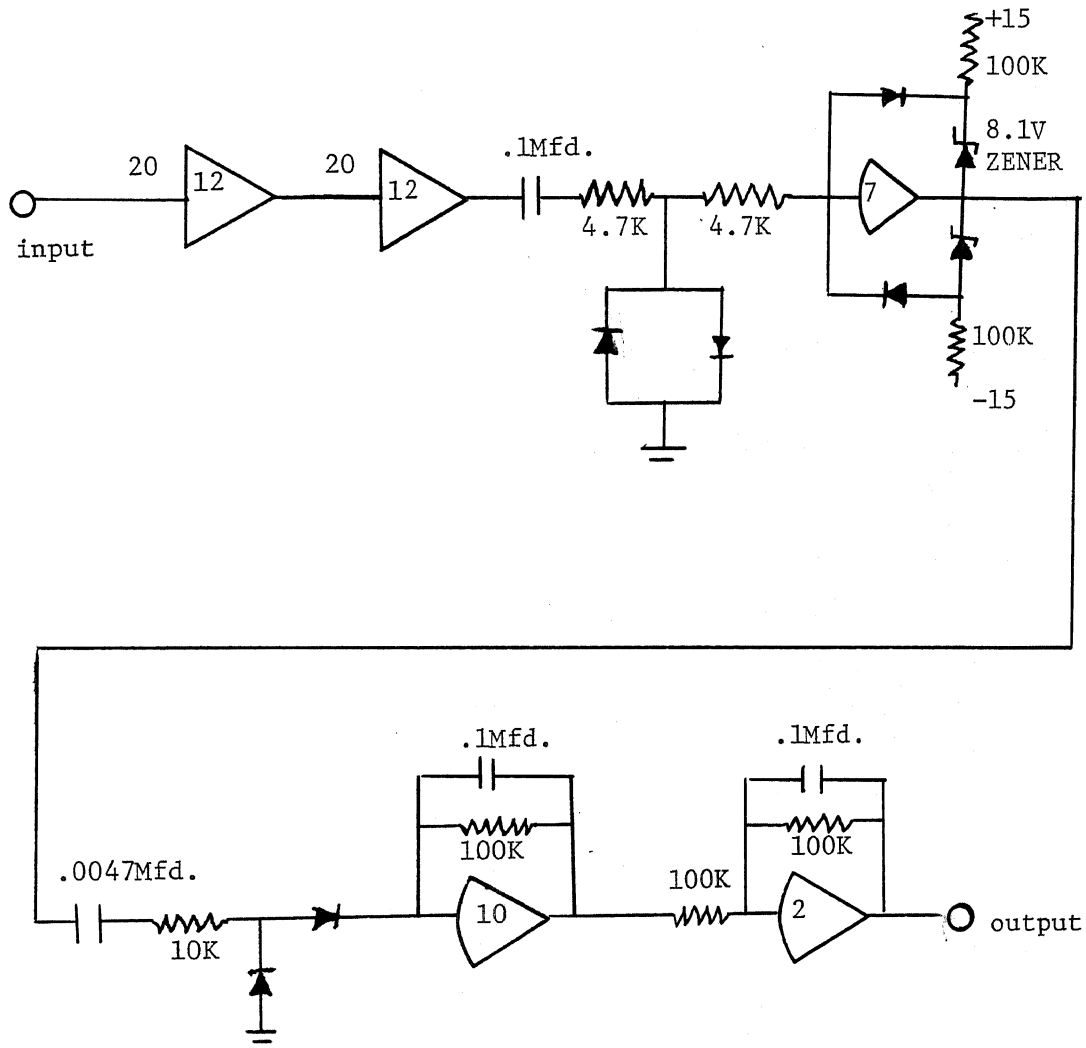

Figure 7 Patching Diagram for Current Fluctuation Input

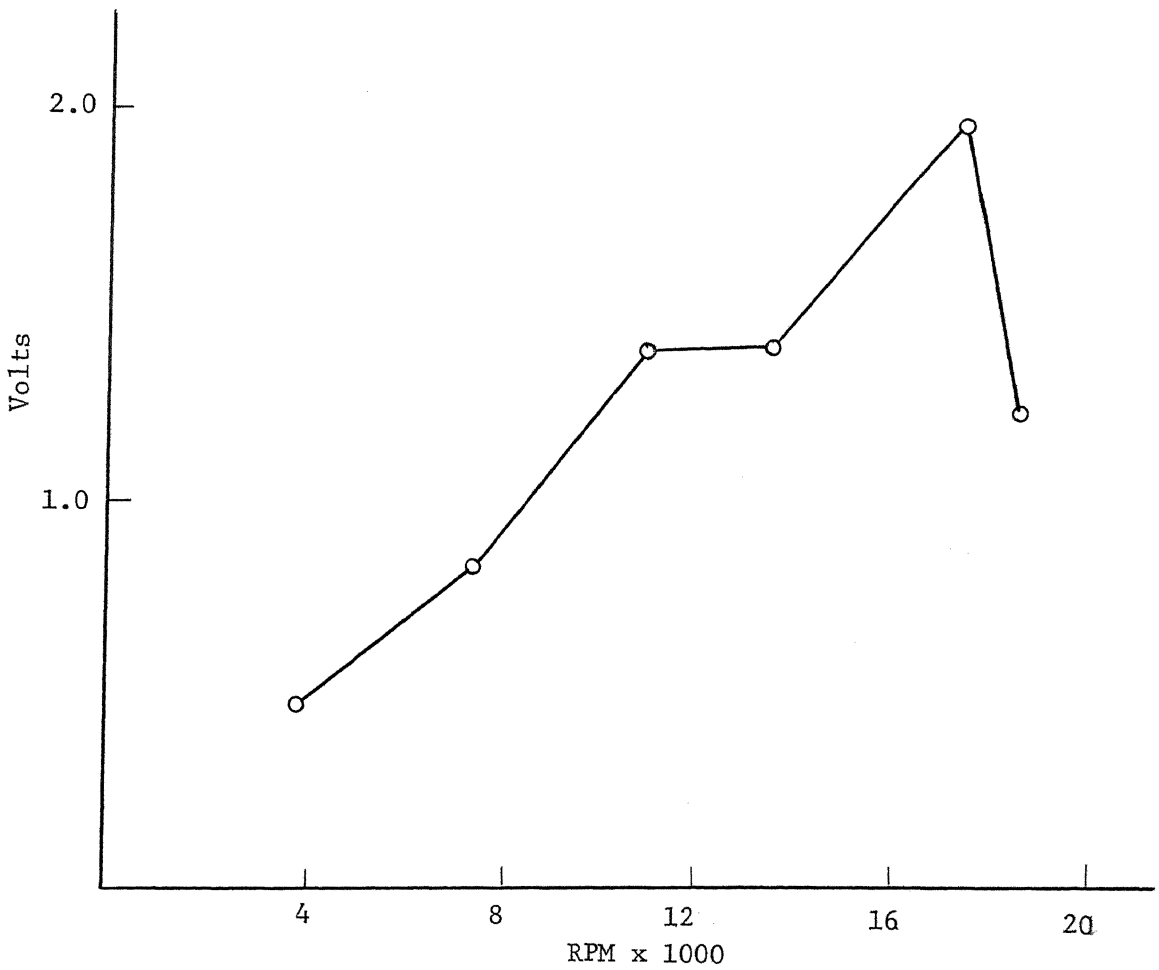

Figure 8 Input Current Fluctuation Calibration Curve

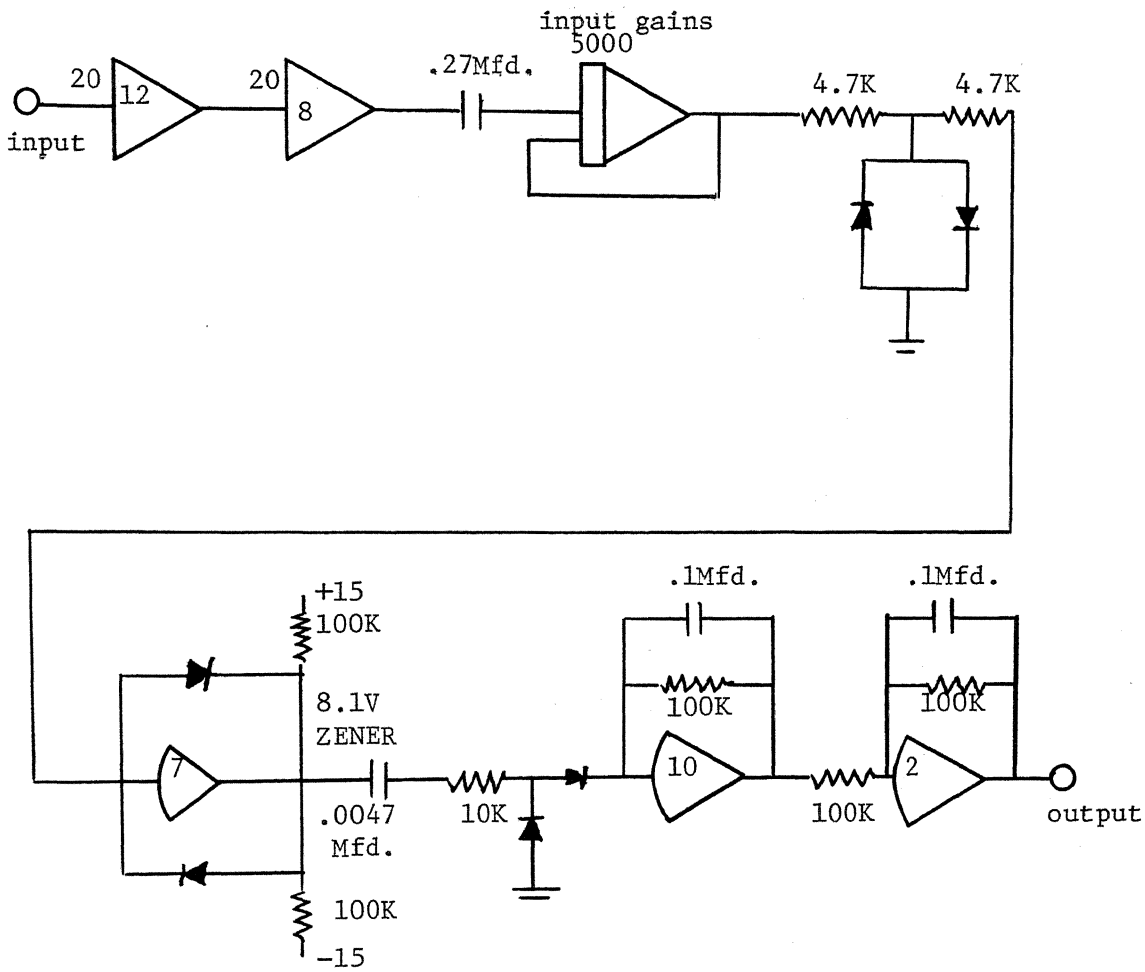

Figure 9 Patching Diagram for Addition of Filter to the Low Frequency Meter-Convertor

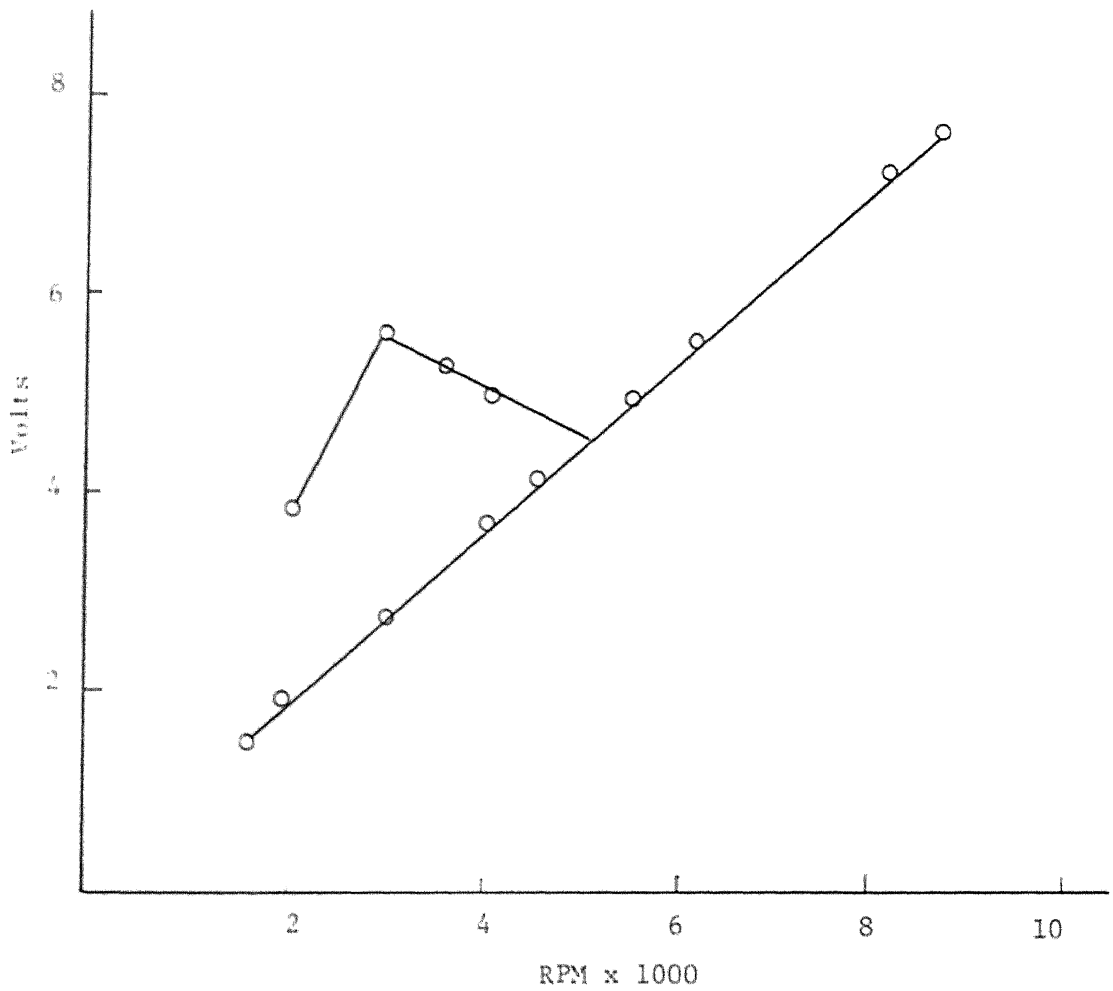

Figure 10 Calibration Curve for Addition of Filter to the Low Frequency Meter-Convertor

results plotted on figure 10.) The results were fairly linear but not consistent. At certain low speeds the output voltage would tend to double, seeming to say that twice the frequency was present. The reason for this doubling was that the input signal would not cross zero smoothly (that is, only once) which would cause two spikes to be recorded rather than just one. Other problems which would make this system inferior for the measurement of the speed of a D.C. fixed field motor are:

1. The brushes must remain in good electrical contact to have a clean input waveform. But after brush wear occurs, a coating develops on the commutator which hampers a clean input waveform.

2. The fact that the brush-spring arrangement has a natural frequency and, if the motor operates at that frequency, the brush will have floating contact with the commutator producing a very noisy signal.

3. External noise is usually picked up.

4. Transient current behavior stops any frequency pick up until the current is close to steady state.

5. The problem of picking up the second harmonic at low speeds which doubles the output voltage.

Therefore a system could be developed that was fairly linear but the system would not be consistent due to the previously stated reasons. For these reasons the system was abandoned, and another means of measurement would have to be found.

C. The Final System

The next system tested was to use basically the same frequency measuring device, but to obtain the signal representative of speed in a different manner. A magnetic pickup (Airpax Model 340-0004) was mounted next to a 72 tooth gear. The signal obtained was very clean, that is,

there was little noise present and it crossed through zero volts smoothly. The measuring system (figure 5 plus an input gain of ten) produced a very stable trapazoidal waveform for any given speed. A constant output voltage was also obtained for any given speed.

The component values were then tuned for maximum performance and changed to see how sensitive each component value was. The time constant of the measuring system was about 10 milliseconds if an output was required with negligible ripple. A smaller time constant could be obtained by switching the feed back of amplifier number four to a .01 Mfd capacitor instead of a .1 Mfd capacitor. The time constant obtained was about four milliseconds, but this would have a ripple of about 5% maximum.

IV. CONSTRUCTION OF THE FINAL PORTABLE MEASURING SYSTEM

Since the carrying of the large analog computer to the place where the magnetic pick up is located is not an easy or practical task, a portable device which would do the work of the analog computer was constructed. Although operational amplifiers are not essential to the workings of the system, they were chosen instead of high gain amplifiers. Operational amplifiers are available in the integrated circuit form, which is more convenient than tube type or transistorized equipment.

The Fairchild Type 709 C operational amplifier was chosen to best suit the job when considering cost and reliability. The 709 C requires a plus and minus fifteen volt power supply. An attempt was tried to construct a line operated power supply, but the ripple on the output was more than the 709 C could stand and still operate effectively. Therefore, two nine and two six-volt batteries were linked to provide the necessary plus and minus fifteen volts. An advantage to this scheme was that plus and minus nine volts was available to bias the operational amplifiers without having to use a dropping resistor (or potentiometer) which would burn up power. The final device (see figure 11) was contained in a metal box $9\frac{1}{2}$" × $5\frac{1}{2}$" × $1\frac{1}{2}$", having the adjustable pots accessible from the outside. To use the device merely requires that the power and the bias switches be on and attaching the input and output via banana plugs.

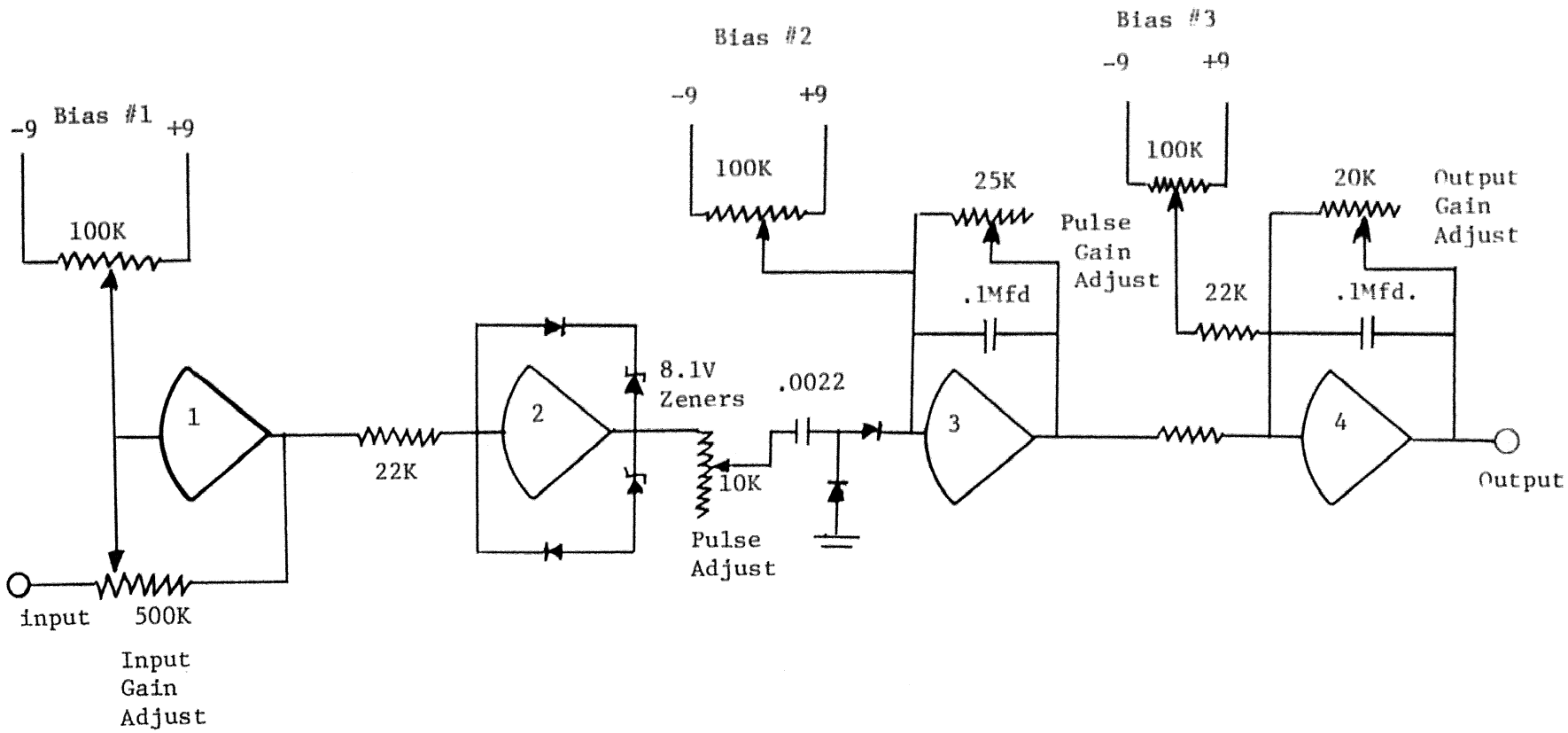

Figure 11 Circuit Schematic of Final Device

V. FINAL TESTING

The device was calibrated according to the procedure given in the appendix. The first test was to obtain the calibration curve of the portable device. Standard frequencies of 500 to 6000 Hertz were obtained from a frequency generator. These were then applied to the input of the portable device and then the steady state values were recorded from the digital voltmeter. These values are shown in figure 12, which demonstrates the linearity of the voltage-frequency relationship.

The next test performed was the step response. A step change in speed can best be accomplished by applying a step change in frequency at the input and monitoring the output on an oscilloscope. It is very hard to generate a step speed change on a real system because this implies infinite torque. But this can be accomplished electrically by applying a step change in frequency to the input of the frequency to analog convertor. Note: This is what the portable device would see from the magnetic pick up if a step speed change did occur. Although a step speed change would never occur in a real system, the testing of the device for a step input gives information to evaluate the performance of the system. The response to step frequency changes of zero to 5400 Hertz and zero to 2700 Hertz were recorded (see figure 13).

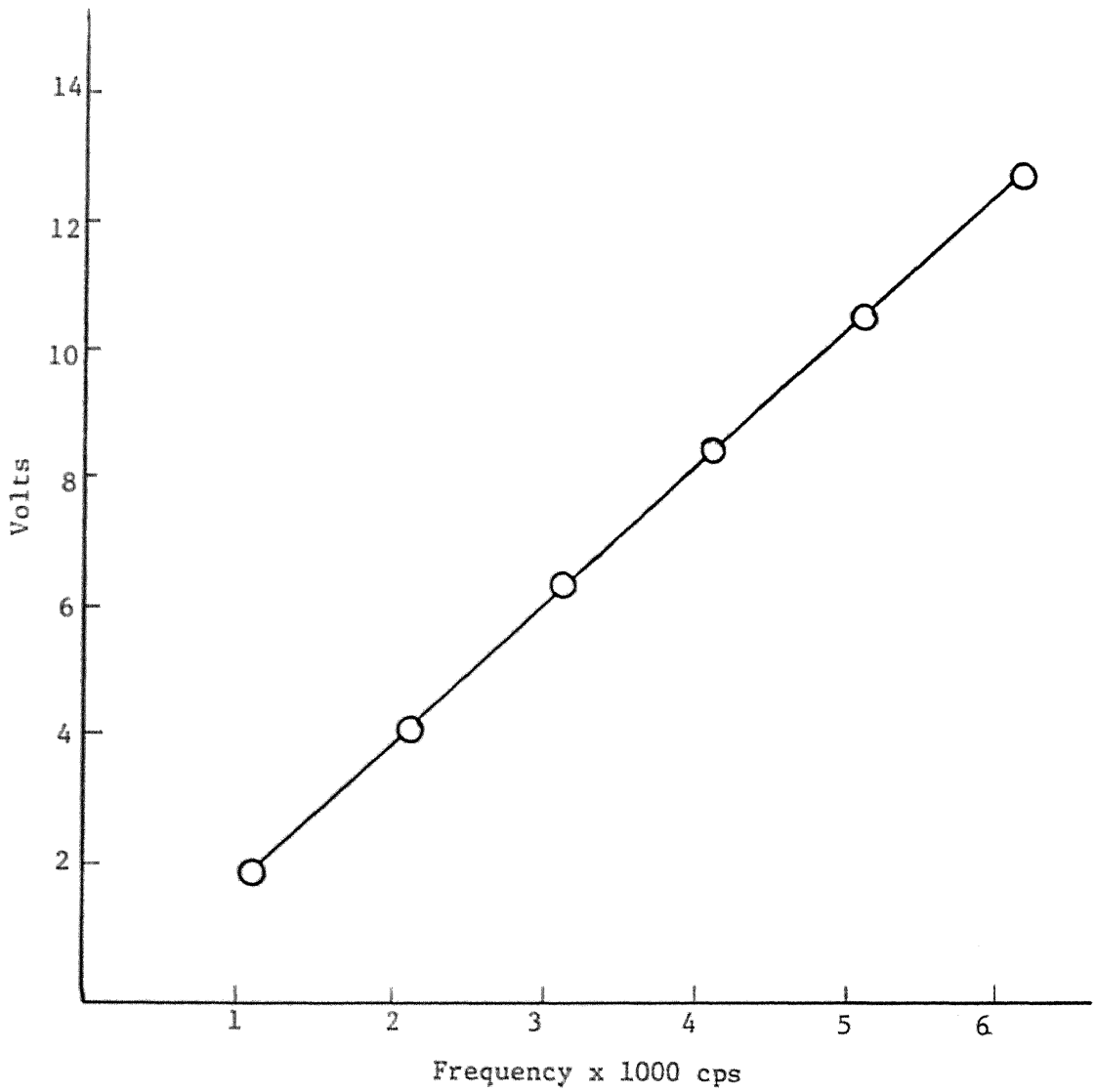

Figure 12 Final System Calibration Curve

Large Step (5400 cps.)

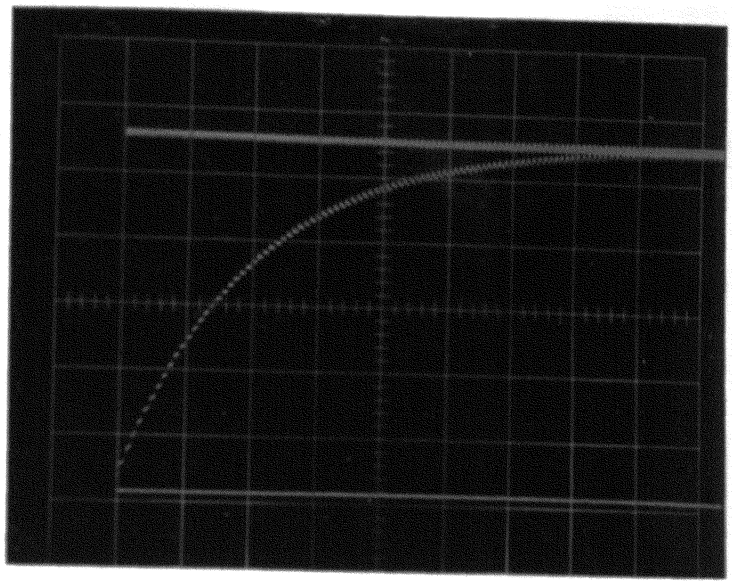

Final Value

Zero Value

2 volts per division

2 milli-seconds per division

Small Step (2700 cps.)

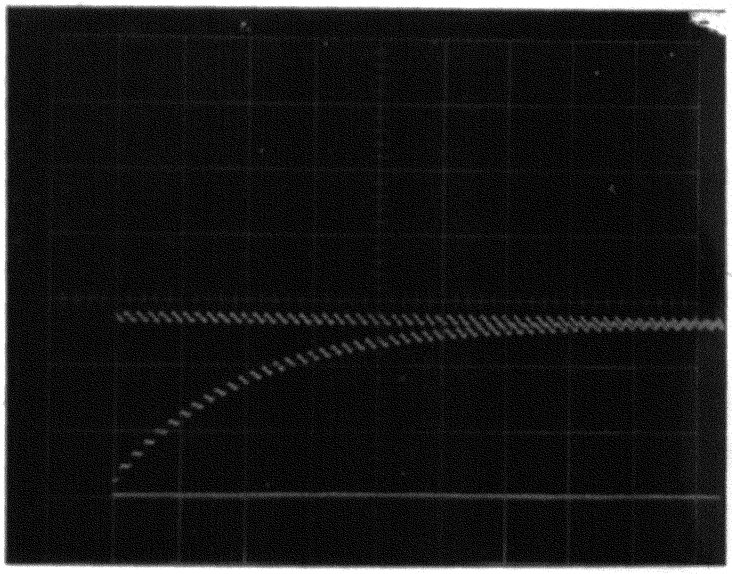

Final Value

Zero Value

Figure 13 Step Response of the Final System

VI. DISCUSSION AND CONCLUSIONS

The advantage of this type of device is that it will work for any rotating shaft which is accessible enough to mount a magnetic pick up and gear. (This device is not limited to D.C. servo motors.) Or for that matter, a spur gear or sprocket or any magnetic conducting material may already be affixed to the machine. Then the only job left would be the mounting of the magnetic pick up. Another advantage would be that the characteristics of the motor; the number of poles, back emf constant, or resistance or inductance of the motor, would not have to be known.

The magnetic pick up-gear arrangement should be chosen such that there is a maximum number of pulses per revolution. But there may be so many geat teeth that the pulses produced by the magnetic pick up are not clean. The maximum number of pulses per revolution helps the response of the device because more current pulses are generated in the measuring system enabling it to climb or fall in voltage level quicker.

Another factor that one must consider is the smoothing of the current pulses. If a large number of pulses are produced per revolution more filtering of the output can be done without slowing the system down, relative to a system which would have a smaller number of pulses per revolution.

The operation of the device is relatively simple. Since the device requires no external power connection either the input or output may be a floating ground. There is hardly any generation of heat so the device stays at about ambient temperature, thus once the device is set up no further adjustments should be necessary.

The performance of the device would probably not be high enough to measure high dynamic speed changes, but would be applicable for recording slower speed changes. Another point that should be brought out is that the combined performance of this device and the output device (strip chart recorder, oscilloscope, voltmeter, etc.) should be considered. For example, if the device is to be used in frequency response work and a strip chart recorder is being used to indicate the output, the device need not respond a great deal faster than the recorder. If the recorder's response might be questionable above 30 Hertz, increasing the response of the portable device way above 30 Hertz would not increase the overall performance of the velocity recording system. The ripple of the output of the measuring device is, in this case, 5400 Hertz at 4500 RPM (see figure 13) and would never be picked up on a strip chart recorder, so the ripple would not effect the overall performance of the system (the measuring device plus recorder).

The loading of the device is very small when one considers the amount of torque needed to activate the magnetic pick up. But if a gear has to be mounted, it has inertia, so the gear will change the performance of the system (slow it down). The only solution to this problem is to have as small a gear as possible (but with as many teeth as possible) which still will give a good magnetic pulse signal. The gear teeth for the best performance would be ones that are very square and spaced from center to center about two diameters of the active piece of the magnetic pick up.

Another factor which should always be considered in the determination of what means of measurement will be used is cost. The cost

of this device is approximately 55 dollars (Appendix E), plus the cost of fabrication and mounting the gear and pick up.

There are several electrical improvements which would improve the performance of the device that would also increase the cost of construction. Because of the diodes in figure 10 (the final electrical diagram) only the positive pulses are being used. (If the diodes were switched the output would be negative). A way of improving the system would be to have another network identical to amplifier two, three, and four, but with the diodes in the reversed direction and then feed this output into amplifier four of the previous network. This would in effect give twice as many pulses as before (the pulses per revolution would equal two times the number of gear teeth). This would decrease the system time constant by a factor of two. The output would be smoother than before, therefore the smoothing capacitors could be decreased by two to obtain approximately the original ripple. The overall effect would be to decrease the time constant of the original system by four. This implies that the final time constant could be 3.65 milliseconds/4 or about .91 milliseconds, which would greatly improve the system but would increase the system cost.

The other approaches tried could have application for certain cases and therefore should not be discounted. For example, if a constant speed device was to be controlled, the transfer function approach would work nicely because it really would not matter if the constants were nonlinear (they could be linearized about the constant speed in question). The fluctuating current approach could be used in cases where the brush-spring arrangement is well constructed and it is possible to obtain a clean current signal.

In the final analysis, the measuring system developed in this thesis would have a small time constant, but the dynamics of the system to be measured would determine whether that time constant was small enough. Also, the loading, accuracy, and final output display device would have to be considered when this device is to be used to give meaningful results.

VII. RECOMMENDATIONS

The previously discussed measuring system has a continuous input but the electrical system converts this signal to digital type current pulses. The output stage then takes these current pulses and transforms them to an analog signal. If the measuring system operated on a continuous input signal and did not convert it into digital information the overall performance would be improved.

One feasible approach would be to build the measuring system similar to a control system (see figure 14). The heart of the system would be in the feedback loop which would be a fast acting D.C. to frequency convertor in order to follow rapid speed changes. The high gain limiters are necessary to obtain a trapazoidal waveform of constant rise time and fall time independent of frequency and not a function of amplitude. Also, the D.C. to frequency convertor would only respond to positive input signals so absolute value circuits are required. The output can be obtained in two places, the second output being compensated for ripple in case of phase shift. The integrator's function, in the feedforward loop, is to store the D.C. level necessary to obtain a frequency equal to the frequency of the incoming signal as well as to integrate the error. Instead of an integrator a first order delay, lead-lag, lag-lead, differentiator, proportional block, or any combination could be used depending on the characteristics of the D.C. to frequency convertor.

It is obvious that this system is superior to the previous one. In the other system, for a step frequency change the system had to add up the current pulses (see figure 13). For this system, the response

to step frequency change would mainly be a function of how quick the D.C. to frequency convertor could respond, and not how many current pulses that are necessary to charge up the capacitor to the average value of the current pulses.

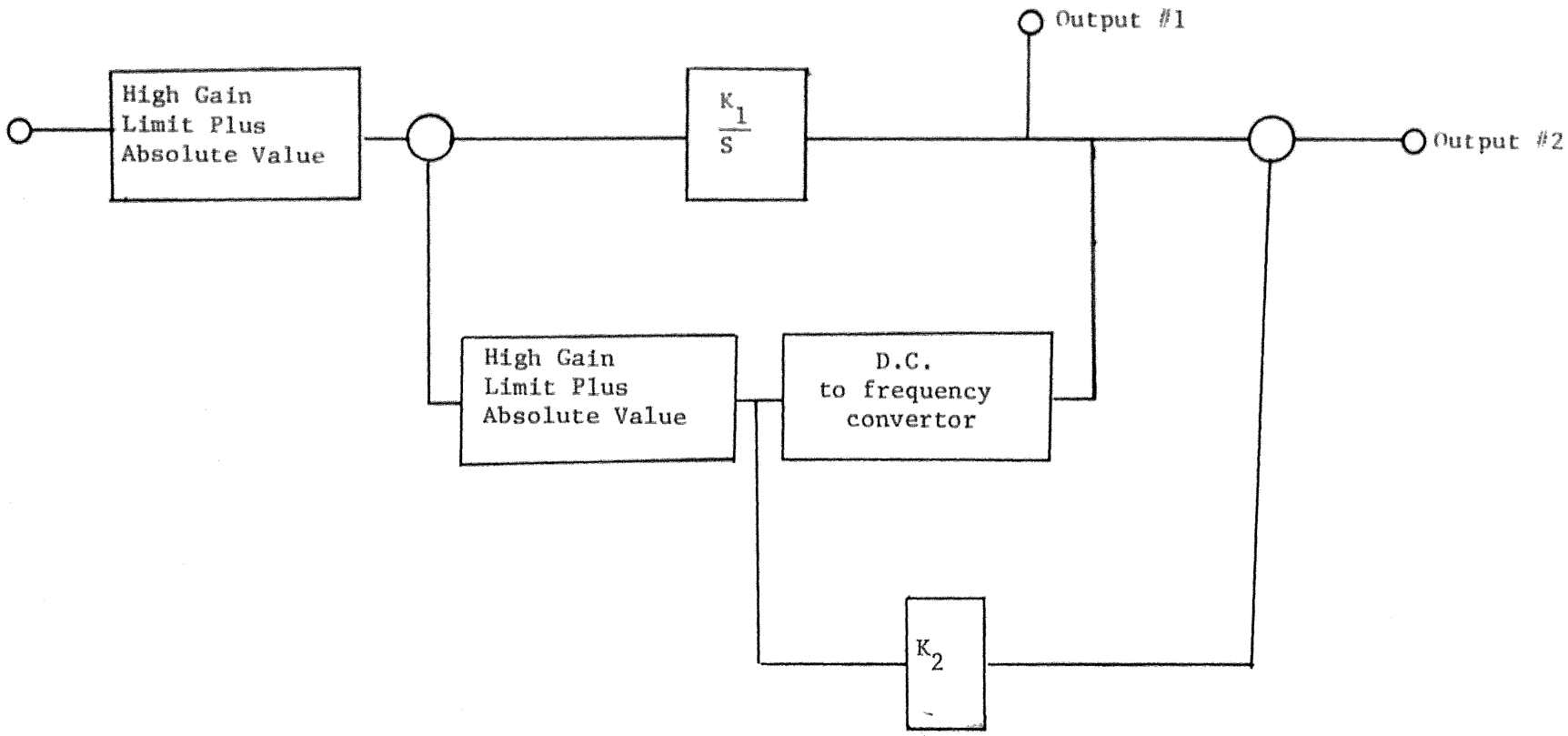

Figure 14 Block Representation of an Analog Frequency Measuring System

BIBLIOGRAPHY

1. Harrison, H. L. and Bollinger, J. G., (1966), *Introduction to Automatic Controls*, International Textbook Company, Scranton, Pennsylvania, p. 132.

2. Engineering Staff of Philbrick/Nexus Research, (1968), Applications Manual for Operational Amplifiers, Section III.66 and III.67.

3. Tuve, G. L., *Mechanical Engineering Experimentation*, McGraw-Hill Book Company, Inc., (1961), New York.

4. Dove, R. C., and Adams, P. H., (1964), *Experimental Stress Analysis and Motion Measurement*, Charles E. Merrill Books, Inc., Columbus, Ohio.

APPENDICES

APPENDIX A

TEST DATA OF LOW FREQUENCY METER-CONVERTOR

A sinusoidal input was applied to figure 5 (patched on an analog computer) from the frequency generator and the output was recorded from a digital voltmeter.

Frequency (Hertz)	Output Voltage (volts)
20	.06
40	.11
60	.17
80	.22
100	.28
200	.55
300	.83
400	1.09
800	2.20
1000	2.75
2000	5.41
3000	8.06
4000	10.63

APPENDIX B

TEST DATA OF CURRENT FLUCTUATION INPUT

The input current signal was applied to the input of figure 7 (patched on an analog computer). The output was recorded from a digital voltmeter. The rpm was measured by a strobotac.

RPM	Output voltage (unsteady reading)
18,200	1.20
16,900	1.92
13,300	1.37
10,600	1.37
7,300	.84
3,530	.45

APPENDIX C

TEST DATA OF FILTER ADDITION

The input current signal was applied to the input of figure 9 (patched on an analog computer). The output was recorded from a digital voltmeter. The rpm was measured by a strobotac.

RPM	Volts
12,800	11.39
10,950	9.78
8,150	7.37
6,200	5.64
4,500	4.19
4,000	3.7 or 5.1
3,800	3.40 or 5.3
3,000	2.8 or 5.6
2,000	3.9 or 3.8
1,430	1.46

APPENDIX D

TEST DATA FOR FINAL SYSTEM CALIBRATION CURVE

The input was obtained from a frequency generator that was directly applied to the portable device shown in figure 11. The output was recorded from a digital voltmeter and the speed of the motor was measured by a strobotac.

Frequency (Hertz)	Output (volts)
500	.82
1000	1.86
2000	4.11
3000	6.37
4000	8.67
5000	10.68
5500	11.60
6000	12.97

APPENDIX E

TOTAL ITEMIZED COST

The cost of the various components used to construct the portable device are listed below.

4 integrated circuit sockets	@ .15	$ .60
4 integrated circuits	@ 3.49	13.96
4 feather-weight coolers	@ .27	1.08
8 small capacitors	@ .15	1.20
2 larger capacitors	@ .30	.60
5 resistors	@ .15	.75
2 diodes	@ .30	.60
2 9-volt batteries	@ 1.36	2.72
2 6-volt batteries	@ .87	1.74
2 switches	@ .75	1.50
7 potentiometers	@ .89	6.23
4 banana plug connectors	@ .25	1.00
1 mounting board	@ .25	.25
1 metal box	@ 1.40	1.40
Magnetic pick up		16.02
Gear (approximately)		3.50
	TOTAL	$53.15

APPENDIX F

MATHEMATICAL PERFORMANCE TESTS

The time constant of the measurement system can be determined from the pictures (figure 13) by drawing a line tangent to the curve at time equals zero and extending it until it reaches the final value. The time at which it crosses the final value equals the time constant. The time constant can also be determined by the time at which the curve reaches 63.2% of its final value.

Time constant determination for a large step input (zero to 5400 Hertz);

By slope method -

1.9 divisions x 2 milliseconds per division = 3.8 milliseconds

By 63.2% of the final value -

1.8 divisions x 2 milliseconds per division = 3.6 milliseconds

The average of the two methods is 3.7 milliseconds

Time constant determination for a small step input (zero to 2700 Hertz),

By slope method -

1.8 divisions x 2 milliseconds per division = 3.6 milliseconds

By 63.2% of the final value -

1.8 divisions x 2 milliseconds = 3.6 milliseconds

The average of the two methods is 3.6 milliseconds.

The average of the two steps is 3.65 milliseconds.

The measuring system can be idealized by the following equation:

$$\frac{V_o(s)}{\dot{\theta}(s)} = \frac{K}{1 + Ts}$$

where

V = output voltage (volts)

$\dot{\theta}$ = input speed (rpm)

K = gain factor (volts/rpm)

and T = time constant of measuring system (3.65 milliseconds) .

A. Ramp Response

Since the generation of a ramp, step, sinusoidal or first order inputs are very hard to generate accurately, a mathematical approach will be taken.

$$\frac{V_o(s)}{\dot{\theta}(s)} = \frac{K}{1 + Ts}$$

for a ramp input in speed $\dot{}(t) = At$

$$V_o(s) = \frac{\dot{\theta}(s)K}{1 + Ts} = \frac{AK}{s^2(1 + Ts)}$$

$$V_o(s) = \frac{B}{S} + \frac{C}{s^2} + \frac{D}{1 + Ts}$$

$$V_o(s) = -\frac{AKT}{S} + \frac{AK}{s^2} + \frac{AKT^2}{1 + TS}$$

$$V_o(t) = -(KAY) \times (1 - EXP(-t/T)) + KAt$$

The ideal output (no delay) = KAt

$$V_o(t)(\text{actual}) - V_o(t)(\text{ideal}) = \text{error}$$

$$= (KAT) \times (1 - EXP(-t/T))$$

Maximum error = KAT (voltage wise)

Maximum error = AT (speed wise)

Assume we have an input of $\dot{\theta}(t) = \frac{5000t}{y}$

Therefore $A = \frac{5000}{y}$ But the error $= AT = \frac{5000T}{y}$

Assume maximum error tolerable at t = y is 2%

at t = y; $\dot{\theta}$ = 5000RPM

Maximum error = 5000*2% = 100 RPM

$$100 = \frac{5000T}{y}$$

$$y = 50xT = 50x3.65x10^{-3} = 1.825x10^{-1} \text{ seconds}$$

Therefore if the input speed is a ramp such that at time equals .1825 seconds the speed has reached 5000RPM (1000RPM/.0365seconds), the maximum error which has occurred is less than 100RPM.

B. First Order Response

For a first order input $\dot{\theta}(t) = A(1 - EXP(-t/T_a))$

$$\dot{\theta}(s) = \frac{A}{s(1 + T_a s)}$$

$$V_o(s) = \frac{AK}{(s)(1 + T_a s)(1 + Ts)}$$

$$V_o(s) = \frac{B}{s} - \frac{C}{1 - T_a s} - \frac{D}{1 - Ts}$$

$$V_o(s) = AK \left| \frac{1}{s} - \frac{T_a^2}{(T_a - T)(1 + T_a s)} - \frac{T^2}{(T - T_a)(1 + Ts)} \right|$$

The ideal output (no delay) $= AK(1 - EXP(-t/T_a))$

$V_o(t)$(actual) $- V_o(t)$(ideal) = error

$$= \left| \frac{AKT}{T_a - T} \right| [EXP(-t/T_a) - EXP(-t/T)]$$

let $T_a = N*T$

$$\text{Error} = \left|\frac{AK}{N - 1}\right| [EXP(-t/T(N*T))-EXP(-t/T)]$$

Taking derivative and setting equal to zero, to find maximum error;

$$EXP(-t/(N*T)) = N*EXP(-t/T)$$

solving yields

$$t = \left|\frac{NT}{N - 1}\right| Log_e(N)$$

let N = 20; then the time at which the maximum error occurs is

$$\frac{20T\ Log_e(20)}{19}$$

The error evaluated at $t = \frac{20T\ Log_e(20)}{19}$ is AKx.043 (about 4.3% error).

Then for N = 20; the time constant of the input is .0730 seconds.

Therefore an input of the form A(1 - EXP(-t/.0730)) will have a measurement error of not more than 4.3% of A.

APPENDIX G

LIST OF EQUIPMENT

Trygon Electronics Power Supply
Model HR40-7.5B
0-40 volt 7.5 amp.

Systron Donner Analog Computer
Model SD-80
Serial #144

Hewlett Packard Function Generator
Model 203A

Airpax Magnetic Pickup
Model 340-0001
Miniature

General Radio Co. Strobotac
Model 1531

Cohu Digital-Voltmeter
Model 501

Tektronix Oscilloscope
Type 3A3 Dual Trace Differential Amplifier
Type 3B2 Time Base

Universal Electric Co. D.C. Motor
Model 4805-1X

APPENDIX H

CALIBRATION OF THE PORTABLE DEVICE

1. Turn power on and apply an input signal.
2. Adjust the input gain and bias #1 until the output of amplifier #1 (an internal connection must be made) is approximately ± 10 volts and such that the positive amplitude and negative amplitude are equal.
3. Monitor the output of the voltage pulse on a scope and adjust the pulse until it is approximately 10 volts maximum.
4. Disconnect the input and adjust bias #2 until the output of amplifier #3 is zero.
5. Reconnect the input and adjust pulse gain until the desired gain (from speed to voltage) is obtained at the output of amplifier #3. (The capacitor in the feedback of amplifier #3 might have to be changed to give the desired amount of smoothness.)
6. Disconnect the input and adjust bias #3 until the output at the banana plugs equals zero.
7. Connect input and adjust output gain until the desired scale factor is reached.
8. Iterate on steps 6 and 7.
9. Add or change the capacitor in the feedback of amplifier #4 if needed.

Note: The maximum scale factor is one which will give 12 volts for the maximum speed to be recorded. The output saturates at 15 volts. The output is nonlinear from 12 volts to 15 volts.

VITA

David Lawrence Persson was born on January 10, 1947, in St. Louis, Missouri. He received his primary education in East St. Louis, Illinois and his secondary education in O'Fallon, Illinois. He received his college education from Belleville Junior College, Belleville, Illinois and from the University of Missouri-Rolla, Rolla, Missouri. He received his Bachelor of Science Degree in Mechanical Engineering from the University of Missouri-Rolla in January 1969.

In January of 1969 he received a teaching assistantship; then in September of 1969 he received a National Science Foundation Grant.

183324