1973

Applications of frequency domain stability criteria in the design of nonlinear feedback systems

Allen Joseph Rushing

APPLICATIONS OF FREQUENCY DOMAIN STABILITY CRITERIA IN THE DESIGN OF NONLINEAR FEEDBACK SYSTEMS

by

ALLEN JOSEPH RUSHING, 1944-

A DISSERTATION

Presented to the Faculty of the Graduate School of the

UNIVERSITY OF MISSOURI - ROLLA

In Partial Fulfillment of the Requirements for the Degree

DOCTOR OF PHILOSOPHY

in

ELECTRICAL ENGINEERING

1973

Advisor

ABSTRACT

The Popov criterion for absolute stability of nonlinear feedback systems is applied to several example problems. Model transformations such as pole shifting and zero shifting extend the class of systems to which the criterion applies. Extensions of the criterion having simple graphical interpretations yield stronger results for systems with constant monotonic slope-bounded nonlinearities. Additional extensions lacking simple graphical interpretations in the complex plane are also demonstrated by example.

Stability throughout a region in parameter space is discussed, and the Kalman conjecture is verified for a new class of systems. The Popov criterion is also used to prove BIBO stability, process stability, and degree of stability. The conservatism of the criterion, i. e., the margin of actual performance beyond guaranteed performance, is discussed in the light of simulation results.

An interactive computer program is developed to make the Popov criterion, along with two of its extensions, a convenient tool for the design of stable systems. The user has the options of completely automatic parameter adjustment or intervention at any stage of the procedure.

PREFACE

The goal of this research has been to find and pull together the results obtained during the past decade or so relating to frequency domain stability criteria for nonlinear systems. These results are somewhat scattered in the literature and sometimes presented in a form too abstruse for direct application by control system engineers. It is hoped that this dissertation will help to establish these criteria in their maximum power and generality as convenient, practical tools that the control engineer will not hesitate to use. The interactive computer program, especially, should help bridge the gap between mathematical theory and convenient design practice.

The author gratefully acknowledges the role of his advisor, Dr. D. Ronald Fannin, in the achievement of the results presented here. Dr. Fannin introduced the author to the Popov criterion, and his suggestions were the basis of many of the ideas pursued here. Frequent discussion helped refine rough ideas and provided the needed guidance. The author also acknowledges the programming consultation of Mr. Hardy Pottinger and the typing service of Mrs. Eunice French.

TABLE OF CONTENTS

TABLE OF CONTENTS (cont'd) PAGE

TABLE OF CONTENTS (cont'd) PAGE

LIST OF ILLUSTRATIONS

LIST OF ILLUSTRATIONS (cont'd) PAGE

FIGURE NO.

I. INTRODUCTION

A. Problem Formulation

Stability is a word with several connotations, but in some sense it is always an important consideration in practical control systems. Given a more or less fixed structure to perform a particular function, several aspects of performance, including stability, must be evaluated to determine the adequacy of sets of system parameters. In analysis one wants to establish system stability before going on to more stringent considerations such as accuracy, speed, reliability, sensitivity, cost, or optimality. In system synthesis the first concern is also system stability, and it may be much more difficult to guarantee a more complete characterization of system behavior. Stability considerations serve to identify those designs worthy of further study and to suggest changes which would stabilize an unstable system.

For linear feedback systems the well-known frequency domain stability criteria of Routh, Nyquist, Bode, Nichols, and others are found in standard texts and are in wide use [1]-[2]. More recent state-space techniques are also applied to the question of linear system stability. Both the "classical" frequency domain techniques and the state-space techniques are utilized in control system synthesis and dynamic response analysis.

For nonlinear systems stability is a much more difficult question. Nonlinear differential equations are not nearly as amenable to solution in closed form, and the very definition of stability is fairly complicated. A simple definition of stability suitable for linear systems must be replaced by a variety of definitions for different kinds of stability in nonlinear systems. This requirement arises because of the variety of dynamic behavior found in nonlinear systems not possible in linear systems. Phenomena such as limit cycle oscillation in the absence of input and initial conditions, finite escape time, jump resonance, and harmonic and subharmonic oscillation exist only in nonlinear systems. Inasmuch as all practical systems are to some degree nonlinear, this complicated behavior cannot immediately be ruled out, and straightforward linear analysis may not be appropriate [2].

The various definitions of nonlinear system stability state the sense in which "stable" system behavior is bounded and not greatly influenced by small disturbances in initial conditions or input. The most general rigorous techniques to establish nonlinear system stability are due to Liapunov and Popov and the various extensions of their results. Describing function techniques are often useful for approximations. The Liapunov techniques may be described as time domain approaches, involving functions of the state variables. The Popov and related criteria such as the circle criterion may be described as frequency domain criteria,

since they involve the transfer function of the linear part of the system [2]. This paper emphasizes investigations of the frequency domain criteria.

The class of systems considered is those which can be modeled as a linear part and a separable gain-bounded nonlinearity. A convenient block-diagram description is shown in Figure 1. The linear part must be time-invariant, but may have time delays. The nonlinear part may be time-varying, may have hysteresis or deadband, or both, and need not be monotonic. It is required that $|u|$ be bounded for every finite $|e|$.

Mathematically, many such systems are described by a set of linear, homogeneous, first-order ordinary differential equations with constant coefficients, with the addition of a nonlinear function whose argument is a linear combination of the state variables.

$$\dot{x} = A\,x + B\,u \tag{1.1}$$

$$u = u(\sigma,t); \qquad \sigma = c\,x$$

where

x = state vector, $n \times 1$

A = system transition matrix, $n \times n$

B = system control matrix, $n \times 1$

u = nonlinear control function; $u(o,t) = 0$

σ = linear combination of state variables

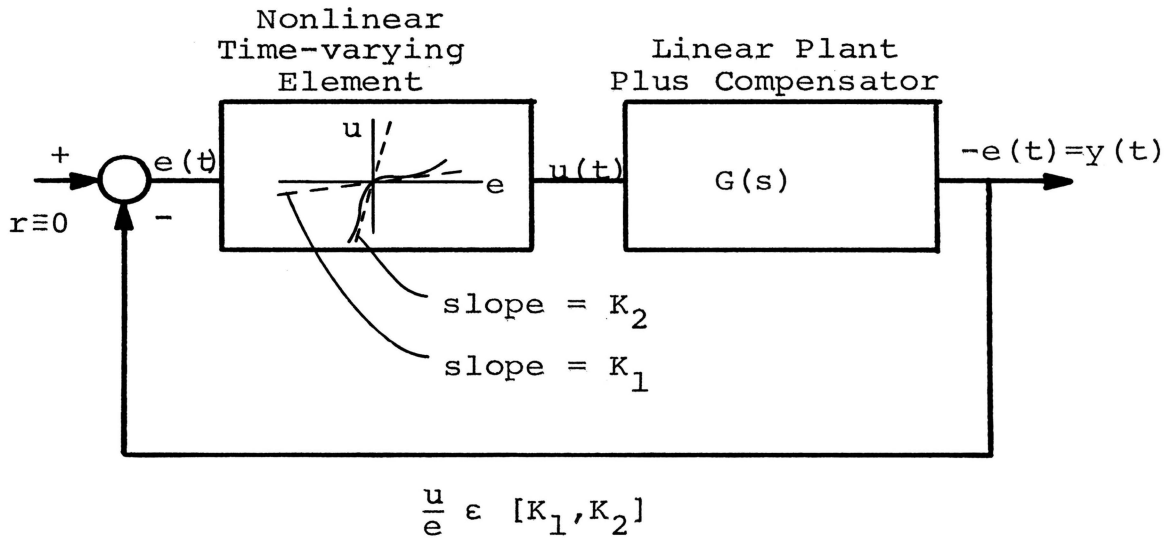

Figure 1. Form of Systems Considered.

c = system output matrix, 1 x n

t = time

and the dot notation indicates differentiation with respect to the independent variable (time, unless otherwise specified). The block diagram and vector-matrix equation representations are related by

$$G(s) = -c[sI-A]^{-1}B.$$

The most important class of nonlinearities excluded by this system description is those where σ is a nonlinear function of state variables (products of state variables, for example). Transformation of system variables can sometimes change an inadmissable nonlinearity into the required form.

The Popov criterion, the circle criterion, and the related frequency domain criteria involve inequalities of functions of G(s). The basic Popov and circle criteria have straightforward graphical interpretations, while for the various extensions attempts at graphical interpretation are not always enlightening.

The object of this research is to review the various frequency domain stability criteria for possible use in computer-aided design of stable systems. Where a simple graphical interpretation is possible, distance or area functions are derived as a measure of the degree to which a system fails to meet the stability criterion. Sensitivity of these functions to parameter changes then guides the procedure for

stabilization of the system. The whole procedure is implemented so that a user can perform his computer-aided design in an interactive mode, permitting the on-line alteration of approach and specifications as he proceeds with the design and learns more about the characteristics of the system. The user's intuition and experience are freed to guide him quickly to the best performance-design effort tradeoff for the particular problem at hand. The inexperienced user has the option of minimal intervention in the design procedure.

All the criteria considered give sufficient conditions for stability--conditions which can be more stringent than necessary. A search is made for the criterion which is least restrictive for a particular problem, so that the stable design obtained is not overly conservative. As a rule, describing the nonlinearity as specifically as possible, especially when it is "nearly linear", can permit the use of less stringent criteria leading to more design flexibility and better dynamic performance.

Several examples indicate how frequency domain stability criteria may be exploited to the fullest in the synthesis of stable nonlinear feedback systems. The examples, along with analysis of loci in the complex plane, suggest that certain classes of systems satisfy the Aizerman and/or Kalman conjecture, and are amenable to linear analysis.

B. Historical Background

The concept and use of feedback control has examples from the beginning of recorded history. An irrigation control system is mentioned in the code of the Babylonian king Hammurabi (cir. 18th century, B.C.). C. Huygens of Belgium in the 17th century discussed the regulation of windmills and water wheels. A. Meikle of Scotland invented an automatic turning gear for windmills in 1772. With the Industrial Revolution of this period feedback regulators for steam pressure, liquid level, temperature, etc., also came into widespread usage. In 1788 James Watt invented a centrifugal governor for his steam engine.

Mathematical analysis of control systems began with James Clerk Maxwell's work, "On Governors," in 1868. The independent work of I. A. Vyshnegradskii in 1876 began the outstanding Russian achievement in the differential equation school of regulator theory, which continues today. Near the end of the 19th century Henri Poincare and A. M. Liapunov developed mathematics for a qualitative stability analysis of nonlinear systems, and avoided the more difficult problem of an explicit solution. Liapunov's second, or direct method continues to give rise to new control technology. Routh and Hurwitz also made lasting contributions to control theory in the 19th century.

Balthasar van der Pol's famous 1927 investigation of the nonlinear oscillations of an electronic multivibrator

was a most elegant application of geometric and analytic methods.

At Bell Telephone Laboratories in the 1930's H. Black, H. Nyquist, and H. W. Bode advanced frequency domain linear feedback control theory for application to vacuum tube amplifiers. In fact Nyquist's stability criterion is a special (linear) case of the circle criterion used in the research of this paper. During World War Two regulator technology was combined with the more recent feedback amplifier technology to produce servo control systems to aim heavy guns, position antennas, guide aircraft, and control other mechanisms of war with speed and precision [3]-[8].

The more recent and specific roots of this paper begin with the 1944 formulation of the "absolute stability" problem by A. I. Lur'e and V. N. Postnikov. This problem has to do with the global asymptotic stability of a system with a single gain-bounded but otherwise unrestricted non-linearity. V. A. Yakubovitch and I. G. Malkin in the Soviet Union and J. LaSalle and S. Lefschetz in the United States developed sufficient conditions for absolute stability by working in the time domain.

Beginning in 1959 V. M. Popov of Rumania developed a distinct frequency domain approach to the absolute stability problem which had a convenient graphical interpretation. Popov and Yakubovitch established connections between the differential equation approaches based on Liapunov's second

method and the frequency domain approaches. Through the 1960's Popov's results were extended by many investigators, notable among whom are M. A. Aizerman, E. N. Rozenvasser, R. E. Kalman, J. J. Bongiorno, Jr., who introduced the circle criterion; I. W. Sandberg, B. N. Naumov, G. J. Murphy, G. Zames, R. W. Brockett, J. C. Willems, J. L. Willems, C. A. Desoer, A. G. Dewey, and E. I. Jury. Others also continue to keep the body of literature growing on the subject of frequency domain stability criteria [9]-[10].

II. REVIEW OF THE LITERATURE

A. Basic Popov and Circle Criteria

V. M. Popov's first paper in which he began developing a new approach to absolute stability appeared in 1959 in a Rumanian Journal [11]. Over the next two years Popov elaborated on his results in a series of papers in Rumanian and Russian. In 1962 his "Absolute stability of nonlinear systems of automatic control" [12] appeared in Automation and Remote Control, an English translation of a Russian journal. The 1964 translation of Aizerman and Gantmacher's book Absolute Stability of Regulator Systems [9] is probably the most complete English documentation of Popov's results through 1963 and the history of the absolute stability problem leading up to Popov's work.

Popov's original theorem applies only to single-valued time-invariant nonlinearities, but subsequent extensions by Popov and others established the Popov criterion in its full generality. Popov's original proof consists of replacing the differential equation by an integral equation and using methods of functional analysis. Proofs yielding substantially the same results and using similar methods were offered by Desoer [13], Sandberg [14], J. L. Willems [15], and Hsu and Meyer [10]. An alternative approach to the proof uses a Liapunov function. Yakubovitch [16],

Kalman [17], and Brockett [18] contributed proofs of this type. Brockett also offered a heuristic justification of the Popov criterion based on a correspondence between the Popov inequality and an interconnection of passive (hence stable) electrical networks [19].

In 1964 J. J. Bongiorno, Jr., of the United States introduced the circle criterion for a special class of functions, with $q = 0$ [20]. A more complete form was given by Sandberg [21]. The circle criterion yields stronger results than the Popov criterion when the nonlinearity lies in a sector $[K_1, K_2]$, $K_2 > K_1 > 0$. Versions of the circle criterion can also be used when the linear part is not stable and when $K_1 < 0$. There are also related criteria for multiple nonlinearities, some involving a matrix inequality of the Popov type, where K and q are diagonal matrices [22]-[25].

Hsu and Meyer [10] consolidated many of the scattered stability criteria, formulating the generalized theorem of Popov and the generalized circle criterion, which will be the standards of this paper. For reference purposes, Hsu and Meyer's generalized theorem of Popov is repeated here:

Consider the basic feedback systems of Figure 1. Let the linear element be output stable (see Chapter VI, A). In order for the system to be both absolutely control-and-output asymptotic for $(u/e) \varepsilon [0,K]$, it is sufficient that a real number q exists such that for all real $\omega \geq 0$ and an arbitrarily small $\delta > 0$, the following condition is observed:

$$\mathrm{Re}[(1+j\omega q)\ G(j\omega)] + \frac{1}{K} \geq \delta > 0.$$

The restrictions on q and K, depending on the nature of the nonlinear element are:

1) for $u = f(e)$, a single-valued, time-invariant element:

   if $0<K<\infty$, then $-\infty<q<\infty$

   if $K=\infty$, then $0\leq q<\infty$

2) for $u = \mathcal{F}[e(t)]$, a nonlinearity with passive hysteresis:

   $0<K<\infty$ and $-\infty<q\leq 0$

3) for $u = \mathcal{F}[e(t)]$, a nonlinearity with active hysteresis:

   $0<K\leq\infty$ and $0\leq q<\infty$

4) for $u = \mathcal{F}[e(t),t]$, a general nonlinearity (time-varying, and possibly with hysteresis):

   $0<K\leq\infty$ and $q=0$

Hsu and Meyer also clarified pole shifting as the connecting link between the Popov and circle criteria. In most problems, results obtained by the circle criterion can be duplicated by the Popov criterion, provided that pole shifting is used to the maximum, i.e., provided that maximum linear negative feedback is applied around G(s) such that

the shifted nonlinearity remains in the first and third quadrants.

With benefit of hindsight and knowledge of the generalized criteria it appears that much of the early literature on the absolute stability problem is needlessly complicated by the separate consideration of numerous special cases and distinctions between direct and indirect control and between principle and particular cases. This fragmentation grew as differing approaches were used in several versions of the problem before the overall unification became apparent. Historically, this pattern seems to be the usual one in all scientific and technological research. The future may well bring further unification.

B. Z(s) Multipliers

Popov's original 1959 success with a new approach to the problem of absolute stability revitalized interest in frequency domain techniques. Among the important extensions of Popov's work, several require that there exist a function $Z(s)$ such that $Z(s)\ [G(s) + 1/K]$ is positive real, where the required form of $Z(s)$ is determined by the restrictions on the nonlinearity, and K is an upper bound on the nonlinearity $f(\sigma)$ or its derivative $df(\sigma)/d\sigma$. It is noted that when $Z(s) = 1 + sq$ we have the ordinary Popov

criterion. The extensions have been given a circuit-theoretic interpretation, but to date they are little used in practical problems. Later in this paper there is discussion of the extent to which the results obtainable from these extensions exceed those obtainable from the original Popov criterion, and how to find an appropriate Z(s).

R. W. Brockett's 1966 survey of "The Status of Stability Theory for Deterministic Systems" [19] has a lengthy bibliography listing most of the important extensions up to that time.

In 1965, Brockett and J. L. Willems [26] gave criteria involving Z(s) multipliers to establish asymptotic stability in the large under each of the following restrictions on the nonlinearity:

1) $f \varepsilon A_k$ and $f \varepsilon M_\infty$ (f is bounded in a sector (0,k) and is monotone)

2) $f \varepsilon M_k$ (f is monotone, with slope bounded by k)

3) $f \varepsilon O_k$ (f is an odd monotone function, with slope bounded by k)

4) $f \varepsilon P_k$ (f is a power law nonlinearity).

The restrictions on f are progressively more stringent, and the corresponding forms of Z(s) are progressively more general. Brockett proposed a Z(s), for monotone nonlinearities, as a rational function with real interlacing poles and zeros.

In 1966 G. Zames [27] considered variously restricted nonlinearities and the removal of a multiplier from the linear element. The frequency response of the linear element is modified by the removal, and, in effect, the size of the forbidden region is reduced.

In the same year, R. P. O'Shea [28] gave a criterion for continuous nonlinearities bounded by monotone functions. The next year M. A. Lakshmi Thathachar, M. D. Srinath, and H. K. Ramapriyan [29] obtained a result for nonlinearities with restricted asymmetry, having the property

$$\left|\frac{f(\sigma)}{f(-\sigma)}\right| \leq c \text{ for all } \sigma.$$

In 1967 O'Shea [30] and in 1970 Y. V. Venkatesh [31] used Z(s) multipliers with both causal and noncausal terms, i.e., with poles in the right half plane, thus going beyond results suggested by a heuristic circuit-theoretic interpretation relating passivity or causality to stability.

The extensions involving a Z(s) combine ideas from Liapunov theory, functional analysis, and network synthesis, as well as classical frequency domain control theory. The more recent papers especially rely heavily on a functional analysis notation and linear algebra, dealing with the properties of operators and transformations in Banach spaces. See, for example, the papers by I. W. Sandberg [32],[33], and M. K. Sundareshan and M. A. L. Thathachar [34].

C. Graphical Extensions

The basic Popov and circle criteria are attractive in applied work because they have simple graphical interpretations. Unfortunately this feature is not shared by most of the extensions involving Z(s) multipliers, because each arbitrary coefficient in Z(s) corresponds to another degree of freedom in the shape of the boundary of the forbidden region. Only one degree of freedom (in this work, the slope of a straight line) can be handled conveniently in a graphical interpretation.

There are two extensions, however, which do have simple graphical interpretations, with the slope of a straight line the only parameter to be determined in a search to satisfy the criteria. A systematic algorithm is quite feasible to determine the satisfaction of these two criteria. With the more general Z(s) multipliers, however, it seems feasible only to use trial and error, or at best suggest heuristic, intuitive guidelines to obtain satisfaction of the criteria. Consequently only the simple graphical criteria are fully utilized here in interactive computer-aided analysis and design. Despite this limitation, the availability and use of two additional criteria in the designer's bag of tricks can lead to stronger results than those obtainable from the basic Popov or circle criteria alone.

A. G. Dewey's 1966 criteria for differentiable nonlinearities [35] and Y. Cho and K. S. Narendra's [36] 1968 off-axis circle criterion for monotonic nonlinearities provide, along with the Popov criterion, a total of three distinct ways to attack the stability problem when the nonlinearity is time-invariant, continuous, and monotonic. The graphical plane of analysis is $\omega \mathrm{Im}[G]$ vs. $\mathrm{Re}[G]$ for the Popov criterion, $(1/\omega)\mathrm{Im}[G]$ vs. $\mathrm{Re}[G]$ for the Dewey criterion, and $\mathrm{Im}[G]$ vs. $\mathrm{Re}[G]$ for the off-axis circle criterion. These planes will be called the G^*, G^{**}, and G planes, respectively.

At the outset of a problem, all the applicable criteria will be considered, perhaps in all three planes, and the criterion yielding the least conservative results will be the basis for parameter adjustment. At the end of the design procedure the other criteria will be checked again, to insure that the final design is no more conservative than necessary to guarantee stability.

D. Applications to Design

Fannin, Judd, and Seacat [37], [38] and Passmore, Chao, and Vines [39] wrote a series of papers utilizing the basic Popov and circle criteria in design of systems guaranteed to be stable. A distance function is defined in the G^* or G plane as a measure of how badly a system fails to satisfy

the appropriate stability criterion. Parameters of the linear part are adjusted, based on the sensitivity of the distance to parameter changes, until the criterion is satisfied. Rushing and Fannin [40] used an area function instead of a distance function and automated the procedure in a batch mode operation. The present paper builds on this work, automating the design procedure in an interactive mode, and exploiting extensions of the basic stability criteria.

B. N. Naumov and Ya. Z. Tsypkin [41] utilized a mapping from the G plane to the logarithmic amplitude-logarithmic frequency (Bode plot) plane as the basis of a nonlinear compensation procedure. G. J. Murphy [42],[43] used a mapping from the G plane to the logarithmic gain-phase (Nichols chart) plane for his compensation procedure. Murphy also used Z(s) multipliers more general than $1 + j\omega q$. C. E. Zimmerman and G. J. Thaler [44] extended classical lag and lead compensation to nonlinear systems, using the Popov criterion.

III. EXTENDING THE USEFULNESS OF THE CRITERIA

A. The Modeling Problem

The following discussion of several aspects of mathematical modeling is important because it is shown how stronger results are obtained from the stability criteria, and how the class of systems treated is broadened. First, the conventional or natural formulation of a practical system may not have the equilibrium point of interest coincident with the origin of the state space, contrary to what is essentially required by Popov. Second, tradeoffs are possible between the characteristics of the linear and nonlinear parts, without changing the stability properties of the model. This permits the use of additional stability criteria not applicable to the original model. Third, the actual nonlinearity may not be confined to a sector. Nonetheless it may be possible to replace the actual nonlinear characteristic with an equivalent combination of ficticious elements such that the system is amenable to analysis by the methods of this paper. Fourth, some models with nonlinearities not expressible as a function of a linear combination of state variables can be transformed into the required form by a change of variables.

Finally, it must be remembered that no model can be truly global in a state space of infinite extent. While

this last point frustrates the quest for global asymptotic stability, it can enhance the results obtained for an in-the-large, but finite region. The following sections discuss these points in more detail.

B. Translation of Coordinates

All the Popov-type stability criteria are used to establish stability of the origin of the unforced system. Often it is necessary to translate the axes of the state space before the Popov criterion can be applied. When the output variable is a mechanical position the origin is naturally chosen at the mechanical equilibrium. In other, non-mechanical processes, as for example where the output is temperature, pressure or composition, the equilibrium point of interest is definitely not where the output has a value of zero (on an absolute scale). In these cases it is necessary to translate coordinates in the state space. Consider the following example.

Example #1:

$$\begin{bmatrix} \dot{x}_1 \\ \dot{x}_2 \\ \dot{x}_3 \end{bmatrix} = \begin{bmatrix} 0 & 1 & 0 \\ 0 & 0 & 1 \\ -6 & -11 & -6 \end{bmatrix} \begin{bmatrix} x_1 \\ x_2 \\ x_3 \end{bmatrix} + \begin{bmatrix} 1 \\ 0 \\ 0 \end{bmatrix} f(\sigma); \quad f(\sigma)=\mathrm{sat}(x_2) + 1$$

where the sat function is defined by

$$\mathrm{sat}(x_2) = \begin{cases} 1, & x_2 > 1 \\ x_2, & -1 \leq x_2 \leq 1 \\ -1, & x_2 < -1 \end{cases}$$

so that $f(\sigma) = f(x_2)$ has a characteristic given by Figure 2(a).

At equilibrium

$$\dot{x}_1 = 0 = x_2 + \mathrm{sat}(x_2) + 1$$

$$\dot{x}_2 = 0 = x_3$$

$$\dot{x}_3 = 0 = -6x_1 - 11x_2 - 6x_3.$$

These equations imply a single equilibrium point at $(\frac{11}{12}, -\frac{1}{2}, 0)$. Now translate coordinates so that the equilibrium point is at the origin. Let

$$z_1 = x_1 - \frac{11}{12}$$

$$z_2 = x_2 + \frac{1}{2}$$

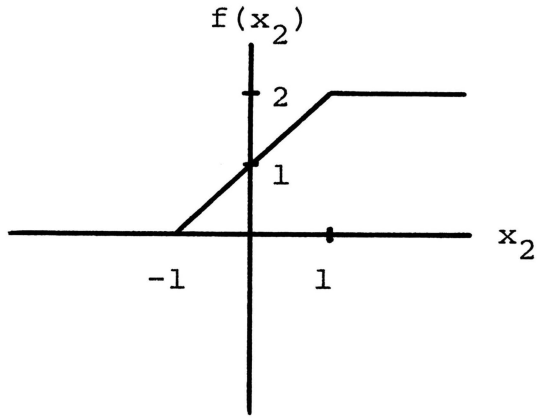

(a)

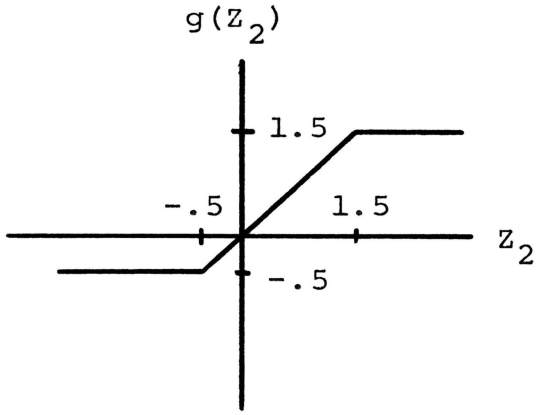

(b)

Figure 2. Nonlinear Characteristics of Example #1.

$$z_3 = x_3$$

so that

$$\dot{z}_1 = \dot{x}_1 = z_2 - \frac{1}{2} + \mathrm{sat}(z_2 - \tfrac{1}{2}) + 1$$

$$\dot{z}_2 = \dot{x}_2 = z_3$$

$$\dot{z}_3 = \dot{x}_3 = -6(z_1 + \tfrac{11}{12}) - 11(z_2 - \tfrac{1}{2}) - 6z_3.$$

In matrix notation we have

$$\begin{bmatrix} \dot{z}_1 \\ \dot{z}_2 \\ \dot{z}_3 \end{bmatrix} = \begin{bmatrix} 0 & 1 & 0 \\ 0 & 0 & 1 \\ -6 & -11 & -6 \end{bmatrix} \begin{bmatrix} z_1 \\ z_2 \\ z_3 \end{bmatrix} + \begin{bmatrix} 1 \\ 0 \\ 0 \end{bmatrix} [\mathrm{sat}(z_2 - \tfrac{1}{2}) + \tfrac{1}{2}]$$

where the nonlinearity is given by Figure 2(b).

The output matrix, c is defined by

$$\begin{aligned} e &= z_2 \\ &= \lfloor c \rfloor z \\ &= \lfloor 0 \quad 1 \quad 0 \rfloor \begin{bmatrix} z_1 \\ z_2 \\ z_3 \end{bmatrix}. \end{aligned}$$

The transfer function G(s) of the linear part is given by

$$G(s) = \frac{-e(s)}{u(s)} = -c[sI-A]^{-1} B$$

$$= \begin{bmatrix} 0 & -1 & 0 \end{bmatrix} \begin{bmatrix} s & -1 & 0 \\ 0 & s & -1 \\ 6 & 11 & s+6 \end{bmatrix}^{-1} \begin{bmatrix} 1 \\ 0 \\ 0 \end{bmatrix}$$

$$= \frac{6}{(s+1)(s+2)(s+3)} \quad .$$

(End of Example #1.)

Another type of situation arises when there is empirical open loop frequency response (gain and phase) data on the input-output behavior of G(s) even though its structure is not known. In this case the equilibrium point(s) of the closed loop system with a particular non-linearity can be calculated from knowledge of G(0). The following simple example illustrates the approach.

Example #2:

The system is in the standard form of Figure 1. The subscript o denotes equilibrium value.

$$e_o = -f(e_o)\ G(0).$$

Solve for the equilibrium value(s) of the output, y. Let

$$f(e_1) = e_1|e_1| + 1 \text{ and assume } G(0)>0 \text{ and } e_o<0.$$

$$e_o = -(e_o|e_o| + 1)\ G(0)$$

$$= -(-e_o^2 + 1)\ G(0)$$

$$G(0)e_o^2 - e_o - G(0) = 0$$

$$e_o = \frac{1}{2G(0)}\ [1 \pm \sqrt{1 + 4[G(0)]^2}]$$

which is less than zero when the negative square root is taken, justifying the assumption $e_o<0$. No real solution exists if it is assumed that $e_o>0$.

With the equilibrium value of the output determined, the nonlinear characteristic must be translated so that the equilibrium point lies at the origin of the new coordinates, e_2 and $g(e_2)$, as shown in Figure 3. The translation determines the Popov sector containing the nonlinearity, and with the empirically derived $G(j\omega)$ locus (or $G^*(j\omega)$ or $G^{**}(j\omega)$ locus) the stability criteria can be applied.

(End of Example #2.)

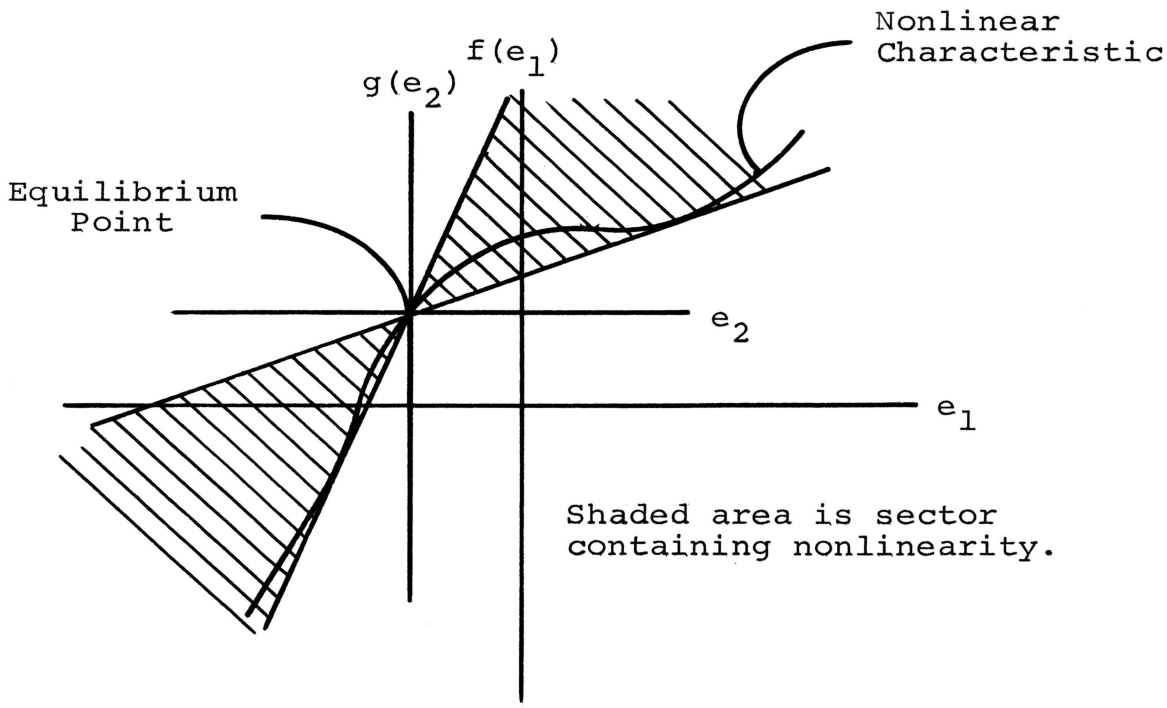

Figure 3. Translation of Coordinates.

C. Pole Shifting

Pole shifting provides a means of obtaining equivalent descriptions or models for the same system which may be preferable for analysis. The procedure involves nothing more than trading linear gain of the nonlinearity for linear feedback around G(s). The system of Figure 4(b) is obtained from the system of Figure 4(a) by pole shifting, where a linear gain of 1.0 has been taken from the nonlinearity and applied in a local feedback loop around G(s). The new $G_a(s)$ has its poles shifted from the original G(s), while the zeros remain unchanged. Gibson [45] treats both pole shifting and zero shifting in some detail.

One reason for pole shifting is to shift the poles of an unstable G(s) into the left half plane as required by the Popov criterion. The root locus methods of linear analysis indicate when this shift is possible and how much feedback is required. Another reason for pole shifting is that stability analysis based on Figure 4(a) involves the circle criterion, with the nonlinearity in the sector [1,2]. The circle criterion is unwieldy when $q \neq 0$, while if $q = 0$ the results may be too conservative. In the equivalent system of Figure 4(b), the nonlinearity is in the sector [0,1], permitting the Popov criterion with $q \neq 0$ to be used. Thus when it is permissible for $q \neq 0$, it can be advisable to apply pole shifting to the maximum so that the lower bound of the nonlinearity sector is zero. Then apply the Popov criterion, or any of its extensions where the slope of a line is a free parameter.

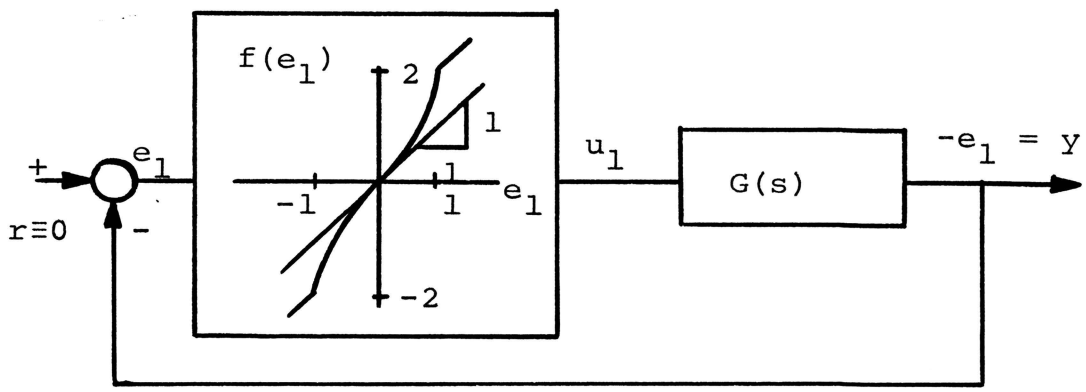

(a)

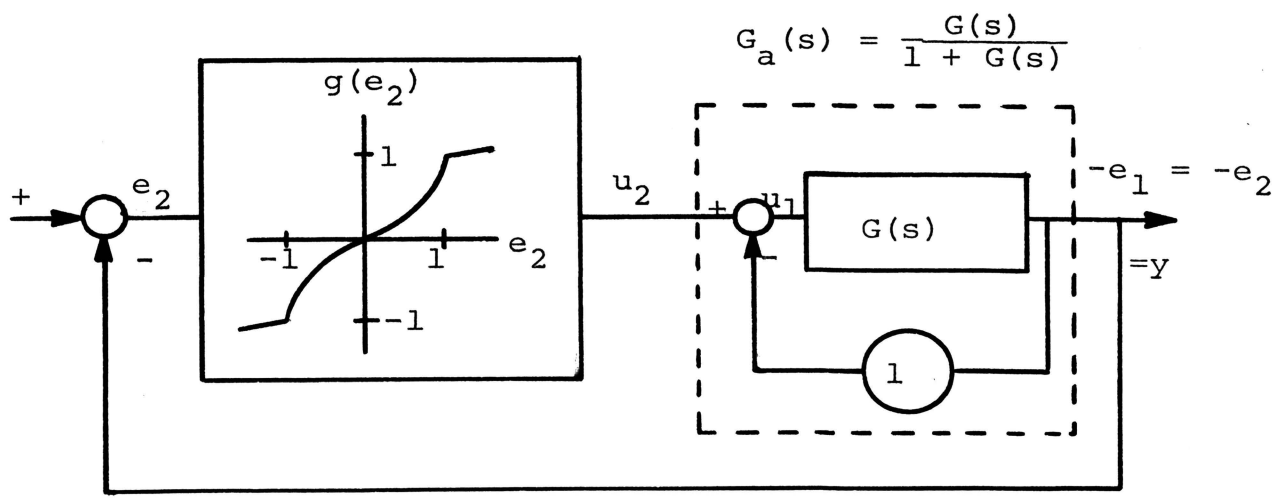

(b)

Figure 4. Pole Shifting.

A disadvantage of such pole shifting occurs when the original nonlinear characteristic is monotonic, but not monotonic after pole shifting to the maximum. Pole shifting can then rule out the criteria requiring a monotonic nonlinearity. In such cases it may be advisable to pole shift by a smaller amount, so that the characteristic remains monotonic.

D. Zero Shifting

Hsu and Meyer [10] use the zero shifting transformation primarily to establish the applicability of the Popov criterion to systems where the numerator and denominator are of the same degree. The system of Figure 5(b) is obtained from the system of Figure 5(a) by a zero shifting transformation defined by $e_c = e + cu$. The zeros of the new linear part, $G_c(s)$, are shifted, while the poles remain unchanged.

In Figure 5(a) the point (e_1, u_1) defines the lower bound, a, on the sector. Under the transformation $e_c = e + cu$, this point maps to the point $(e_1 + cu_1, u_1)$ in Figure 5(b). Similarly, the point (e_1, u_2) defining the upper bound, b, on the sector maps to the point $(e_1 + cu_2, u_2)$ in Figure 5(b). The new sector in Figure 5(b) defined by the transformed points is

$$\left[\frac{u_1}{e_1+cu_1}, \frac{u_2}{e_1+cu_2}\right] = \left[\frac{a}{1+ac}, \frac{b}{1+bc}\right].$$

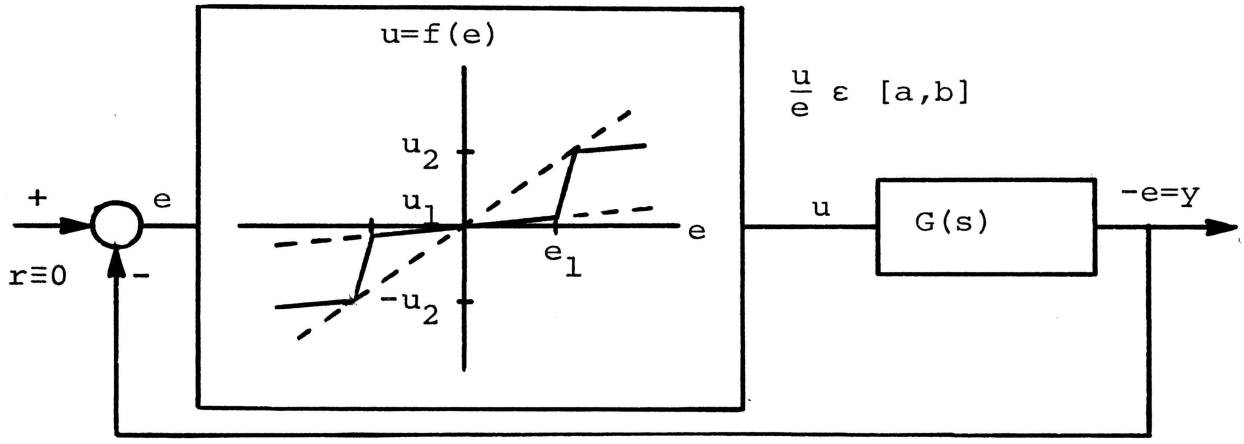

(a)

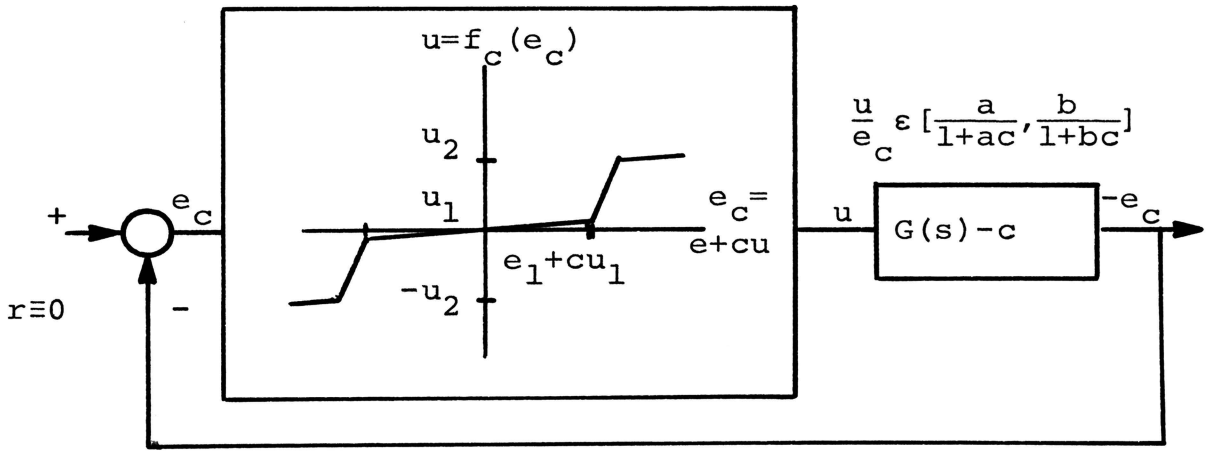

(b)

Figure 5. Zero Shifting

The new linear part, $G_c(s)$ is defined by

$$G_c(s) = \frac{\mathcal{L}\{-e_c(t)\}}{\mathcal{L}\{u(t)\}} = \frac{\mathcal{L}\{-e(t) - cu(t)\}}{\mathcal{L}\{u(t)\}} = G(s) - c.$$

Zero shifting combined with some decompositions of multiple-valued nonlinearities given by Gibson [45] permits improved results to be obtained for systems with certain hysteresis type nonlinearities.

The system of Figure 6(a), having a symmetric relay characteristic with hysteresis and deadband, can be transformed into the equivalent system of Figure 6(b). In the simplified transformed system of Figure 6(c) the Popov criterion can be applied with no restriction on the sign of q. For

$$G(s) = \frac{K}{(s+2)(s+3)(s+4)}$$

and a = .5, b = 1, M = 1; the transformation leads to an upper bound on K of 104 for absolute stability of the sector $u/e \in [0,2]$, compared to 51 for Figure 6(a) ($q \leq 0$). Both of these bounds on K were found with the aid of the interactive computation package, and the value obtained after zero shifting is very close to the maximum value of K for a linear characteristic of slope 2, which is K_{max} = 105.

The Popov-type methods cannot be applied at all to the system with the backlash characteristic of Figure 7(a), because the nonlinearity is not confined to a sector. The

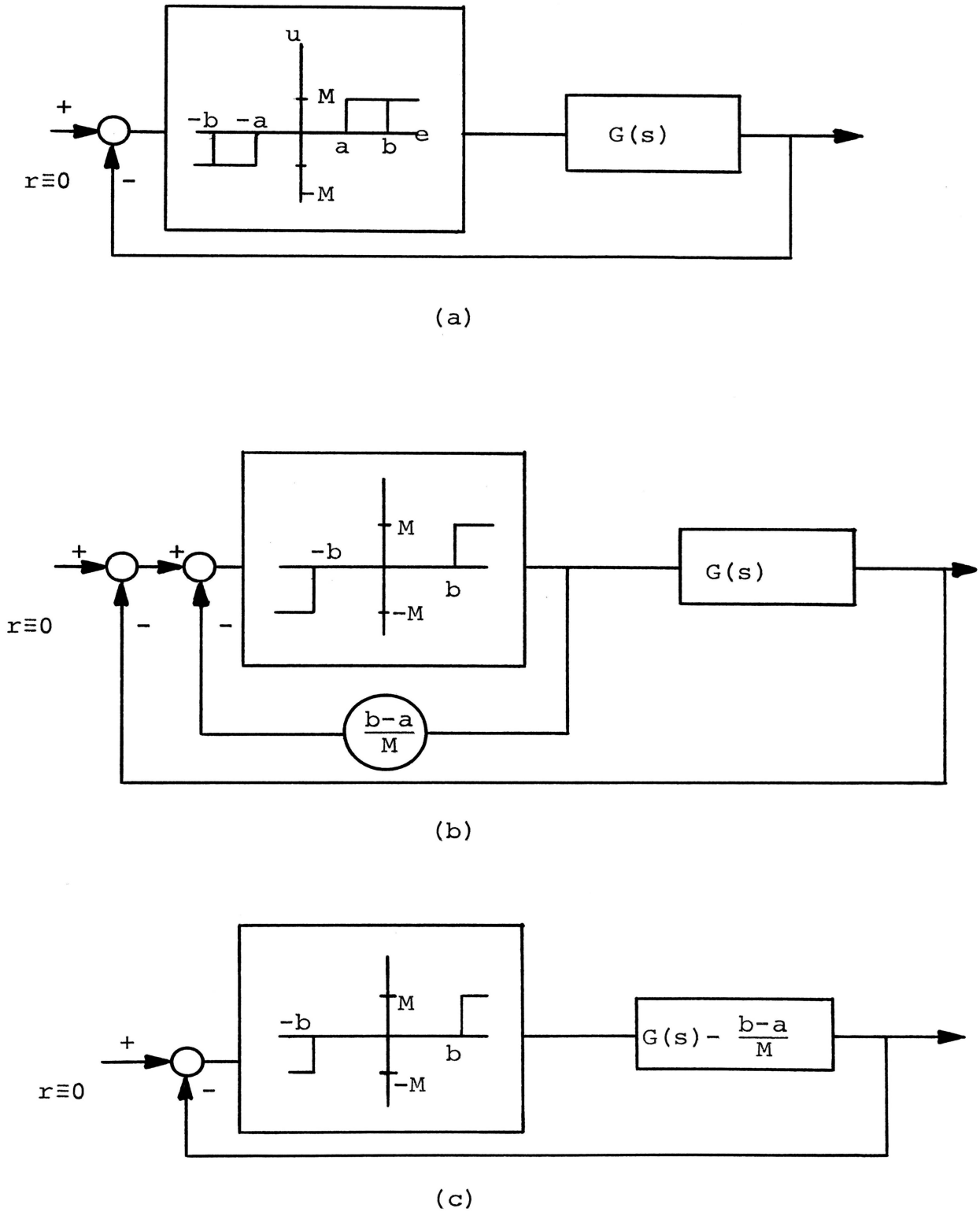

Figure 6. Zero Shifting Applied to a Relay Characteristic With Hysteresis and Deadband

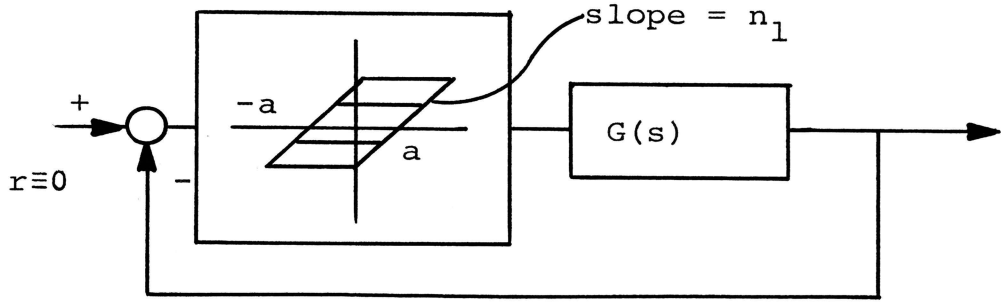

(a)

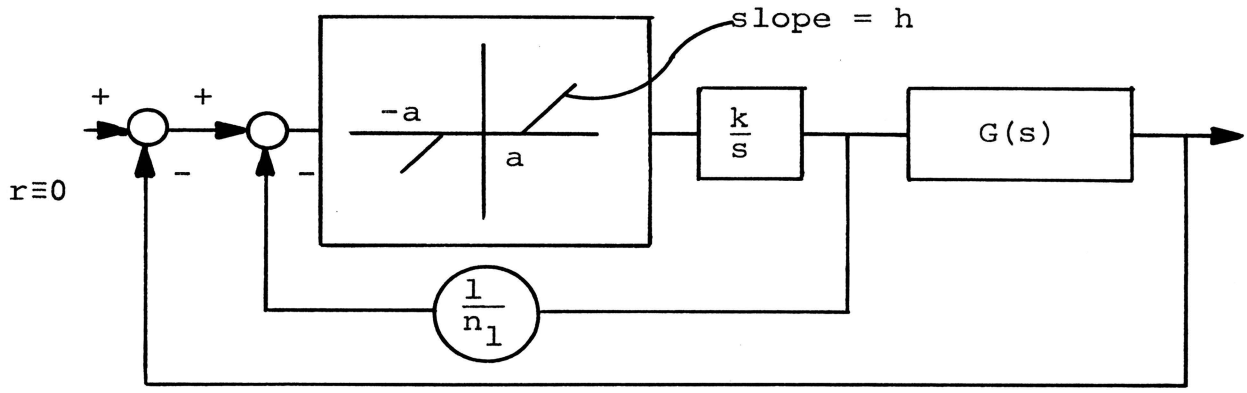

(b) Equivalence to Figure 7(a) becomes exact as $hk \to \infty$; in practice $hk \geq 100$ gives sufficient exactness.

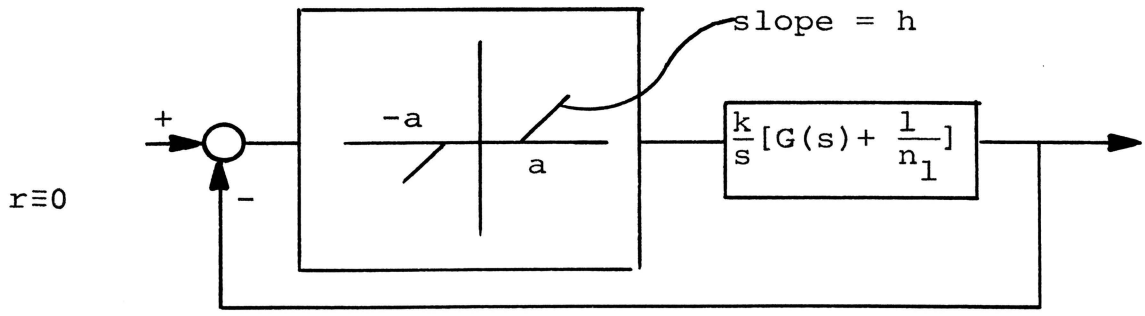

(c)

Figure 7. Zero Shifting Applied to Backlash Characteristic

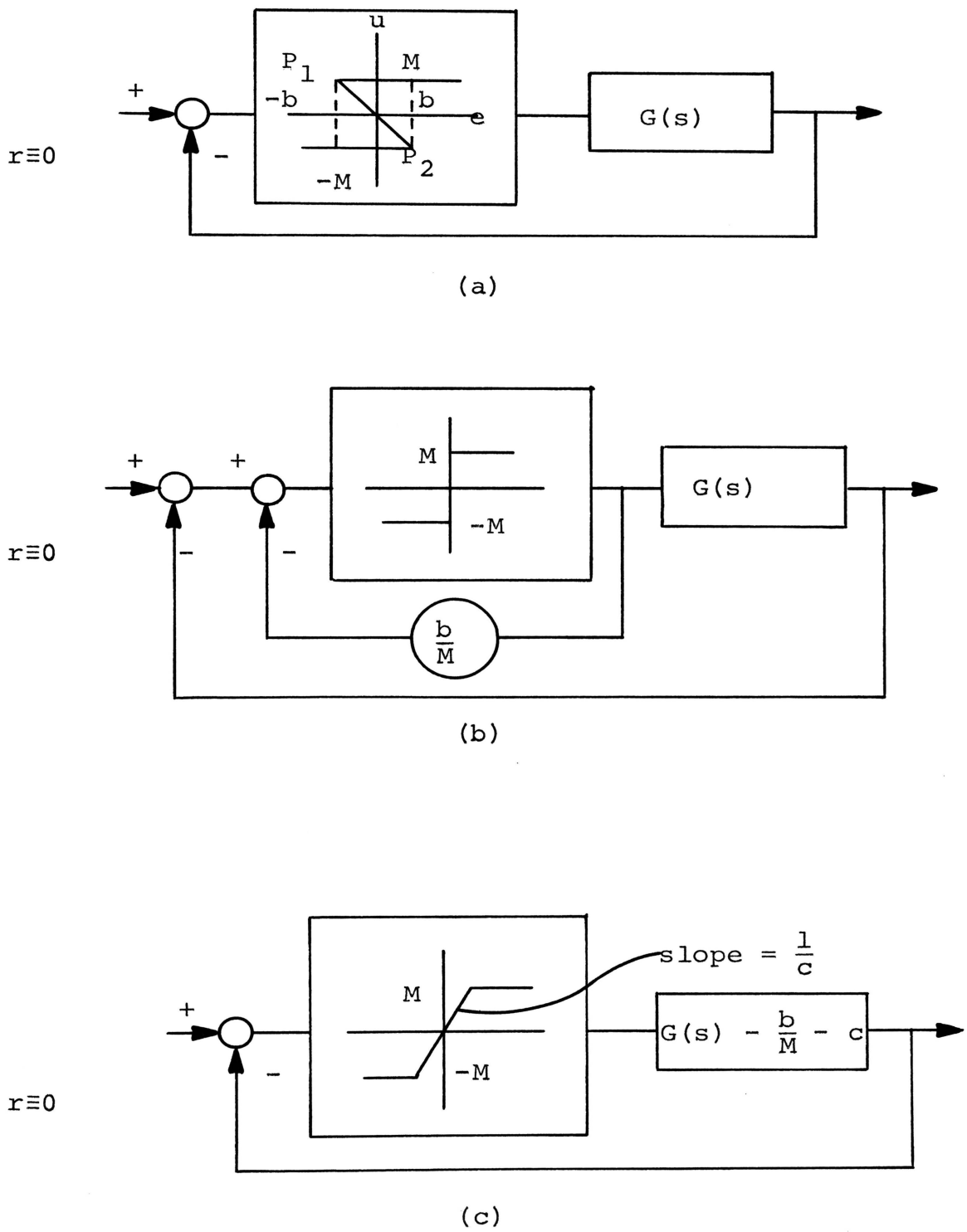

Figure 8. Zero Shifting Applied to a Relay Characteristic With Hysteresis

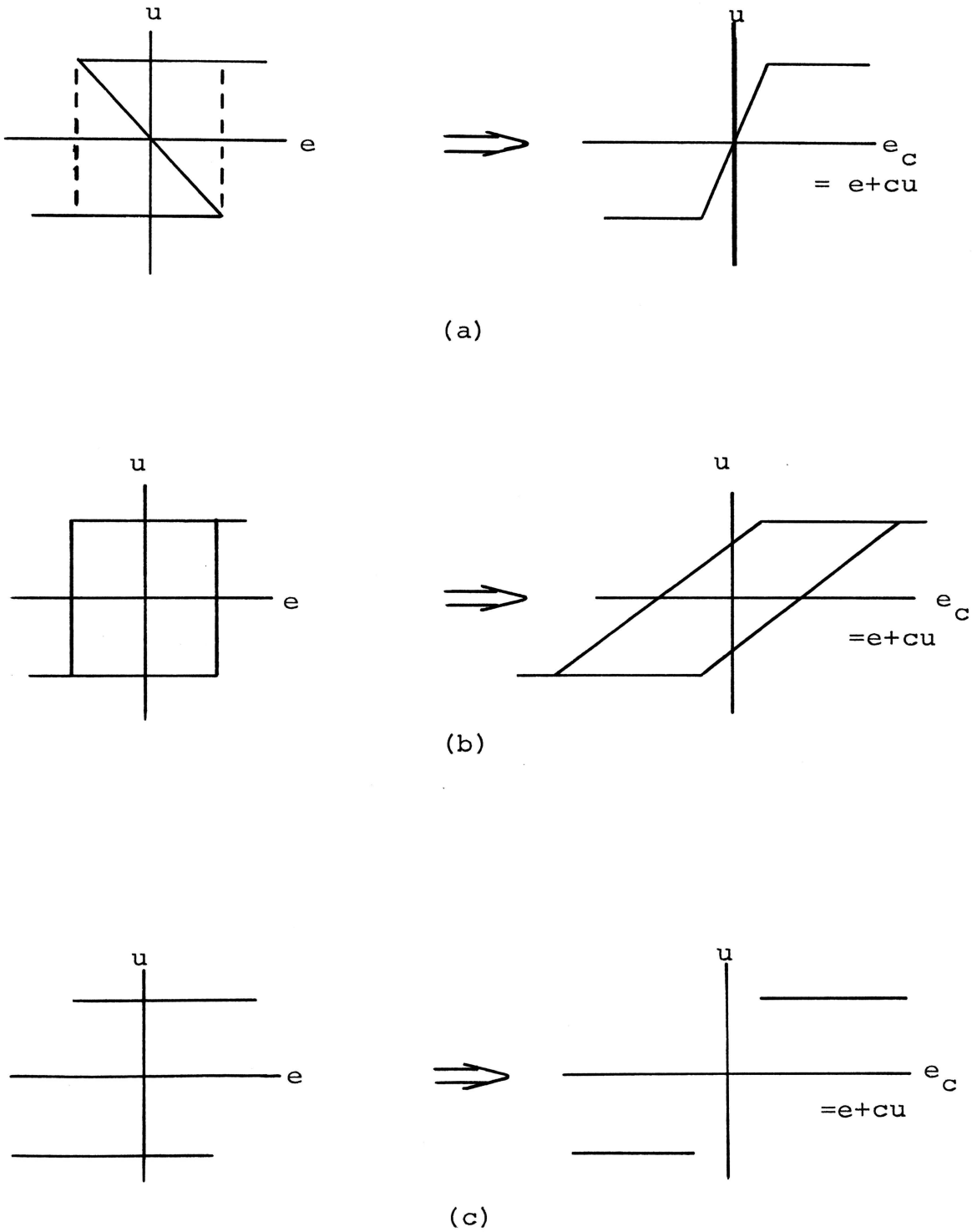

Figure 9. Zero Shifting Applied to Three Hysteresis Characteristics

decomposition given by Gibson yields the system of Figure 7(b). After simplification to Figure 7(c), the usual Popov criterion can be applied.

Figure 8(a) depicts another system whose nonlinearity is not of the required form. Where the original characteristic is multiple-valued, the output of the nonlinearity is on the same segment as it was immediately previously. If the nonlinearity is at point P_1 or P_2 and $|e|$ decreases, the output follows the diagonal rather than the horizontal segment. Zero shifting yields Figure 8(c), where the new nonlinearity is confined to the sector [0,K], so that the Popov criterion can be applied.

It should be pointed out that three superficially identical relay-type characteristics with hysteresis but no deadband may actually have three different characteristics, as shown in Figure 9. Zero shifting is useful only for the top characteristic. The bottom characteristic is the one associated with ordinary electromechanical relays, and the zero shifting transformation does not exist in an interval about the origin of the zero shifted characteristic.

E. Product Nonlinearities

Baron and Meyer [46],[47] show how, in certain models with product nonlinearities, non-zero equilibrium points can be investigated for stability by means of a change of variables. The technique is presented in the context of

a nuclear power reactor, where the neutron density η, and the n-vector y of several temperatures, satisfy the state equations

$$\dot{\eta} = K\eta$$

$$\dot{y} = Ay - b\eta \tag{3.1}$$

where K, the reactivity, is a function of the state of the reactor.

$$K = K_o + c'y - p\eta \ .$$

The product nonlinearity arises from the $K\eta$ term of the state equations. Equilibrium points are at the origin, $\eta_1 = y_1 = 0$, and at

$$\eta = \eta_2 = (p-c'Ab)^{-1} K_o$$

$$y = y_2 = A^{-1}b(p-c'A^{-1}b)^{-1} K_o \ .$$

Translation of coordinates defined by

$$\theta = \eta - \eta_2$$

$$x = y - y_2$$

puts the equilibrium point (η_2, y_2) to the new origin. The kinetic equations are

$$\dot{\theta} = K(\theta+\eta_2)$$

$$\dot{x} = Ax-b\theta$$

$$K = c'x-p\theta.$$

Now let

$$\sigma = \ln\left[\frac{\theta+\eta_2}{\eta_2}\right].$$

The kinetic equations can now be written as

$$\dot{\sigma} = c'x - p\eta_2 \ (e^{\sigma}-1)$$

$$\dot{x} = Ax - b\eta_2 \ (e^{\sigma} -1)$$

which is of the standard form for the Popov criterion.

The essential characteristic of the system (3.1) is that one state variable, η, is decoupled from the rest except insofar as K is a function of the other state variables, and that the remainder of the system is linear.

F. Stability In-the-Large

Another important modeling point concerns constraints on the value of the output variable, e. In the vicinity of the equilibrium point under consideration the nonlinearity may be accurately modeled by a particular mathematical function. If the domain of the function is taken to be $[-\infty,+\infty]$, the sector containing the nonlinearity may be larger than actually required. Direct constraints on the output variable, or constraints on the state variables, may permit a sharpening of the stability criteria by limiting the domain, and likewise the range of the nonlinear characteristic.

Such constraints, of course, spoil the linearity of the part of the system represented by G(s), and if any variable actually reaches its constraint the stability criteria are not applicable. In a particular problem engineering judgement is called for to estimate how far the state variables might reasonably deviate from the desired operating point. The stability results would be equivalent to those obtained by Liapunov methods in which stability in-the-large is determined for a finite region R and it is estimated that disturbances would always be within R. Liapunov functions used in proofs of Popov type criteria also lend themselves to establishment of finite regions of stability [48], [49].

IV. REGIONS IN PARAMETER SPACE SATISFYING STABILITY CRITERIA

A. Parameter Space Where the Popov Criterion is Satisfied

D. D. Siljak [50] reformulated the absolute stability problem to include parameter variations. By analytic means he obtained the region R_2 in parameter space where the Popov type inequality is satisfied. The results have important implications regarding system sensitivity and in the verification of the Aizerman and Kalman conjectures.

The object of this chapter is to first review the work of Siljak by considering the details of his example. Siljak's work is compared to results obtained by graphical interpretation of the Popov criterion. Then an analytic interpretation of the Popov type inequality is developed based on the Routh criterion. This interpretation is suitable for checking the satisfaction of stability criteria involving general Z(s) multipliers. Finally the conjectures of Aizerman and Kalman are considered, and a verification of the Kalman conjecture is obtained for a new class of systems, based on the equation for the locus curvature and the Routh criterion.

Siljak first puts the Popov inequality for an n-th order system into the form

$$\sum_{i=0}^{2n} a_i \omega^i > 0 \quad \text{for all } \omega \geq 0 \tag{4.1}$$

where the coefficients a_i are real functions of the parameters of G(s), the sector bound K, and the free parameter q representing the reciprocal slope of the Popov line in a graphical interpretation. If $a_0>0$ and if there are no positive real roots of the left hand polynomial, then (4.1) is satisfied for all $\omega \geq 0$. For this to take place, it is sufficient, by Descartes' rule of signs, that

$$a_i \geq 0, \quad i = 1,2, \ . \ . \ . \ 2n.$$

These inequalities define a region R_2 of absolute stability in Euclidian parameter space, R^n. The mere sufficiency of Descartes' rule means that R_2 is only a subregion of R_1, the region where the Popov criterion is satisfied, which itself is only a subregion of R_0 where there is absolute stability. Nevertheless it is valuable information that every combination of parameters in R_2 corresponds to an absolutely stable system.

Furthermore Siljak shows how to imbed a hyperrectangle, R_3, of maximum volume centered about the point of nominal parameter values in the irregularly shaped R_2. In this way independent restrictions on each parameter are obtained.

$$R_3 \leq R_2 \leq R_1 \leq R_0.$$

The following example illustrates how the regions R_2 and R_3 are obtained and compares these results to

those obtained by a graphical use of the Popov criterion.

Example #3:

$$G(s) = \frac{s^2+\mu_2 s+\mu_3}{\mu_1(s+1)(s+2)(s+3)} = \frac{s^2+\mu_2 s+\mu_3}{\mu_1(s^3+6s^2+11s+6)}$$

$$K = 1 \quad ; \quad s = j\omega.$$

The Popov criterion for q = 0 is

$$\frac{1}{K} + \mathrm{Re}[G(j\omega)] > 0 \text{ for all } \omega \geq 0$$

$$1 + \mathrm{Re}\left[\frac{\mu_3-\omega^2+j\mu_2\omega}{\mu_1(-j\omega^3-6\omega^2+j11\omega+6)}\right] > 0$$

$$1 + \mathrm{Re}\left[\frac{(\mu_3-\omega^2+j\mu_2\omega)[(6-6\omega^2)-j(11\omega-\omega^3)]}{\mu_1[(6-6\omega^2)^2+(11\omega-\omega^3)^2]}\right. > 0$$

$$\mu_1[(6-6\omega^2)^2+(11\omega-\omega^3)^2]+(\mu_3-\omega^2)(6-6\omega^2)+\mu_2\omega(11\omega-\omega^3) > 0$$

$$36\mu_1+6\mu_3+(49\mu_1-6\mu_3+11\mu_2-6)\omega^2+(14\mu_1-\mu_2+6)\omega^4+\mu_1\omega^6>0.$$

The coefficients of each power of ω are required to be greater than zero:

$$a_0 = 36\mu_1 + 6\mu_3 > 0 \tag{4.2}$$

$$a_2 = 49\mu_1 + 11\mu_2 - 6\mu_3 - 6 \geq 0 \tag{4.3}$$

$$a_4 = 14\mu_1 - \mu_2 + 6 \geq 0 \tag{4.4}$$

$$a_6 = \mu_1 \geq 0. \tag{4.5}$$

Equations (4.2) through (4.5) determine the region R_2 in a 3-dimensional parameter space where the Popov criterion is satisfied for $q = 0$.

Next a hyperrectangle (a right parallelopiped in this case) of maximum volume is imbedded in R_2, with the center at some specified point $(\bar{\mu}_1, \bar{\mu}_2, \bar{\mu}_3)$. The volume V is defined as

$$V = 2^3(\mu_1 - \bar{\mu}_1)(\mu_2 - \bar{\mu}_2)(\mu_3 - \bar{\mu}_3). \tag{4.6}$$

Now V is maximized subject to the constraints (4.2) through (4.5). Substitute the expressions for one of the parameters obtained from the equalities (4.2) through (4.5) into (4.6) and set the partial derivatives equal to zero. For example, if constraint (4.3) is solved for $\mu_1^0 = \mu_1^0\ (\mu_2, \mu_3)$, where the superscript 0 denotes extreme value, and substituted into (4.6), then (4.7) and (4.8) are obtained.

$$\frac{\partial V(\mu_2,\mu_3)}{\partial \mu_2} = 0 \tag{4.7}$$

$$\frac{\partial V(\mu_2,\mu_3)}{\partial \mu_3} = 0. \tag{4.8}$$

Altogether there will be four sets like (4.7), (4.8), each set corresponding to one of the constraint equations. Each set defines a region in parameter space, and the intersection, R_3, satisfies all four constraints.

From (4.3)

$$\mu_1 = \frac{1}{49}\ (6\mu_3-11\mu_2+6)$$

$$V = 2^3\ [\frac{1}{49}\ (6\mu_3-11\mu_2+6)-\bar{\mu}_1]\ (\mu_2-\bar{\mu}_2)(\mu_3-\bar{\mu}_3).$$

Let $(\bar{\mu}_1,\bar{\mu}_2,\bar{\mu}_3) = (.2,0,0)$.

$$V = 2^3[\frac{1}{49}\ (6\mu_3-11\mu_2+6)\ -\ .2]\ \mu_2\mu_3$$

$$= 2^3[\frac{6}{49}\ \mu_2\mu_3^2\ -\ \frac{11}{49}\ \mu_2^2\mu_3\ +\ (\frac{6}{49}\ -\ .2)\ \mu_2\mu_3]$$

$$\frac{\partial V}{\partial \mu_2} = 0 = \frac{6}{49}\ \mu_3^2\ -\ \frac{22}{49}\ \mu_2\mu_3\ +\ (\frac{6}{49}\ -\ .2)\ \mu_3$$

$$= .1224\mu_3^2\ -\ .4490\mu_2\mu_3\ -\ .0776\mu_3 \tag{4.9}$$

$$\frac{\partial V}{\partial \mu_3} = 0 = \frac{12}{49}\,\mu_2\mu_3 - \frac{11}{49}\,\mu_2^2 + \left(\frac{6}{49} - .2\right)\,\mu_2$$

$$= .2449\mu_2\mu_3 - .2245\mu_2^2 - .0776\mu_2. \qquad (4.10)$$

Solving (4.9) for μ_2 yields

$$\mu_2^0 = \frac{1}{.449\mu_3}\,[.1224\mu_3^2 - .0776\mu_3]$$

$$= .2726\mu_3 - .1728. \qquad (4.11)$$

Substituting into (4.10) yields

$$0 = .0501\mu_3^2 - .0423\mu_3 + .0067$$

$$\mu_3^0 = \frac{.0423 \pm \sqrt{.00045}}{.1002}$$

$$= \begin{cases} .6337, \text{ for a minimum volume inside } R_2 \\ .2106, \text{ for a maximum volume inside } R_2. \end{cases}$$

Using the smaller number and (4.11),

$$\mu_2^0 = (.2726)(.2106) - .1728$$
$$= -.115$$

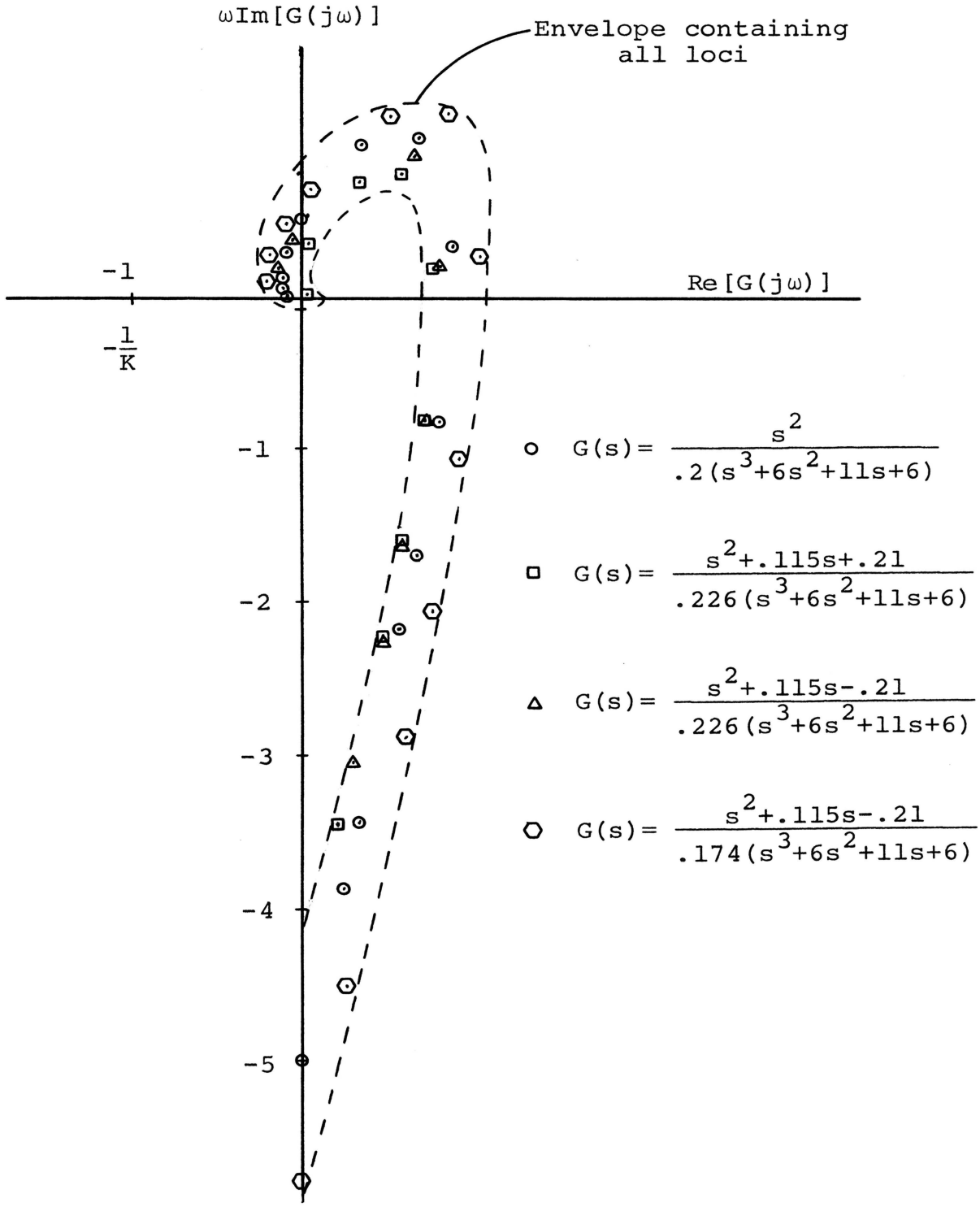

Figure 10. $G^*(j\omega)$ loci For Parameter Sets at the Vertices of R_3 of Example #3

$$\mu_1^0 = \frac{1}{49}\,[6(.2106) - 11(-.115)+6]$$
$$= .174.$$

A region where constraint (4.3) is satisfied is defined by

$$|\mu_1 - .2| \leq .2 - .174 = .026$$

$$|\mu_2 - 0| \leq .115$$

$$|\mu_3 - 0| \leq .21.$$

It is found that this region also satisfies the other constraints (4.2), (4.4), and (4.5), so that the region R_3 is defined.

The $G^*(j\omega)$ locus is plotted for parameter values corresponding to the vertices of R_3 in Figure 10. The most negative real coordinate of all these loci is -.22, compared to $-1/K = -1$. Recognizing that the $G^*(j\omega)$ locus shifts continuously as parameters are varied, it is clear that R_3 is much more restricted than needed to satisfy the Popov criterion.

(End of Example #3.)

In a problem where q is not restricted to be zero, q will appear in (4.1) and must be set to particular values to obtain numerical bounds for R_3. The procedure should be repeated for a variety of q values, and the largest of

the regions thus defined taken as R_3. The union of the regions is a region where the criterion is satisfied, but the union is not a hyperrectangle. An additional constraint, such as $q \leq 0$, may be necessary according to the type of nonlinearity in the system.

The sector bound K can also be left as a parameter, and included in the definition of volume. Leaving q and K as parameters in Example #3, the Popov criterion becomes

$$\frac{1}{K} + \mathrm{Re}[(1+j\omega q)G(j\omega)] > 0 \qquad \text{for all } \omega \geq 0$$

$$\frac{1}{K} + \mathrm{Re}\left[(1+j\omega q)\left(\frac{(\mu_3-\omega^2+j\mu_2\omega)\ [(6-6\omega^2) - j(11\omega-\omega^3)]}{\mu_1[(6-6\omega^2)^2 + (11\omega-\omega^3)^2]}\right)\right] > 0$$

$$\frac{\mu_1}{K}[(6-6\omega^2)^2 + (11\omega-\omega^3)^2] + (\mu_3-\omega^2)(6-6\omega^2) + \mu_2\omega(11\omega-\omega^3)$$

$$+ \omega q[-\mu_2\omega(6-6\omega^2) + (\mu_3-\omega^2)(11\omega-\omega^3)] > 0$$

$$a_0 = \frac{36\mu_1}{K} + 6\mu_3 > 0 \tag{4.12a}$$

$$a_2 = \frac{49\mu_1}{K} - 6\mu_3-6+11\mu_2-6q\mu_2+11q\mu_3 \geq 0 \tag{4.12b}$$

$$a_4 = \frac{14\mu_1}{K} + 6-\mu_2+6q\mu_2-q(11+\mu_3) \geq 0 \tag{4.12c}$$

$$a_6 = \frac{\mu_1}{K} + q \geq 0 \tag{4.12d}$$

$$V = 2^3(\mu_1-.2)\ \mu_2\mu_3\ (K-1). \tag{4.13}$$

Solve (4.12b) for μ_1, using the equality to zero.

$$\mu_1 = \frac{K}{49}\ [6\mu_3+6-11\mu_2+6q\mu_2-11q\mu_3]. \tag{4.14}$$

Substitute into (4.13) and set the partial derivatives equal to zero.

$$V = 2^3\ [\frac{K}{49}\ (6\mu_3+6-11\mu_2+6q\mu_2-11q\mu_3)-.2]\mu_2\mu_3(K-1)$$

$$\frac{\partial V}{\partial \mu_2} = 0 = [\frac{K}{49}(6\mu_3+6-11q\mu_3)-.2]\ \mu_3(K-1) + 2[\frac{K}{49}(-11+6q)]$$

$$\cdot\ \mu_2\mu_3\ (K-1) \tag{4.15}$$

$$\frac{\partial V}{\partial \mu_3} = 0 = [\frac{K}{49}(6-11\mu_2+6q\mu_2)-.2]\mu_2(K-1)+2[\frac{K}{49}(6-11q)]\mu_2\mu_3(K-1)$$

$$\tag{4.16}$$

$$\frac{\partial V}{\partial K} = 0 = [\frac{2}{49}(6\mu_3+6-11\mu_2+6q\mu_2-11q\mu_3)-.2]\mu_2\mu_3K$$

$$-\ [\frac{1}{49}\ (6\mu_3+6-11\mu_2+6q\mu_2-11q\mu_3)\ -.2]\mu_2\mu_3. \tag{4.17}$$

Simultaneous solution of (4.14) through (4.17) (if it exists) yields extreme values of the parameters, $\mu_1^0,\mu_2^0,\mu_3^0,K^0$. To get numerical results, q must be set to a particular

value. Repeat the procedure setting q to many different values. The region R_3 is then the largest of all the regions defined for particular values of q.

As an extension to the volume concept, it might be desired to exponentiate each factor of the equation for V according to the relative tolerance desired in the corresponding parameters. In Example #3 suppose that a large tolerance bracket on $\bar{\mu}_1$ is more important than the tolerance on $\bar{\mu}_2$ or $\bar{\mu}_3$. Then let

$$V = 2^3(\mu_1-\bar{\mu}_1)^2 \ (\mu_2-\bar{\mu}_2) \ (\mu_3-\bar{\mu}_3).$$

Other extensions could be applied to the Popov-type criteria involving more general Z(s) multipliers, where the coefficients of Z(s), like q in the Popov criterion, are treated as parameters.

Larger regions of absolute stability can be obtained by use of the Routh criterion. Beginning with equation (4.1) it is noted that only even powers of ω are present. It is known that $a_0>0$. To satisfy the stability criterion, it must be shown that the polynomial

$$P_1(\omega) = \sum_{i=0}^{2n} a_i\omega^i$$

has no positive real roots. A method outlined by Siljak [51] based on the Routh criterion follows.

Replace ω by $-j\omega$ to form $P_2(\omega)$. $P_2(\omega)$ has the same roots as $P_1(\omega)$ except for a rotation of +90 degrees. Form the Routh array for $P_2(\omega)$. The number of roots of $P_2(\omega)$ with positive real parts is equal to the number of sign changes in the left hand column of the array. This is equal to $\frac{1}{2}$ the number of complex roots of $P_1(\omega)$. (See Figure 11.) Require that there be n sign changes--meaning that there are no real roots of $P_1(\omega)$. This requirement can in general be satisfied non-uniquely, so that possibly a variety of regions in parameter space could be found where there is absolute stability. For example #3 the Routh array is formed as follows:

$$P_1(\omega) = \mu_1(36-72\omega^2+36\omega^4+121\omega^2-22\omega^4-\omega^6)+(\mu_3-\omega^2)(6-6\omega^2)$$

$$+ \mu_2\omega(11\omega-\omega^3) = \mu_1\omega^6+(14\mu_1-\mu_2+6)\omega^4+(49\mu_1+11\mu_2-6\mu_3-6)\omega^2$$

$$+ 36\mu_1+6\mu_2.$$

Replace ω by $-j\omega$ to form $P_2(\omega)$.

$$P_2(\omega) = \mu_1\omega^6+(14\mu_1-\mu_2+6)\omega^4 - (49\mu_1+11\mu_2-6\mu_3-6)\omega^2+36\omega_1+6\mu_2.$$

The Routh array for $P_2(\omega)$ is given in Figure 12, where the second row is formed by differentiating the first row.

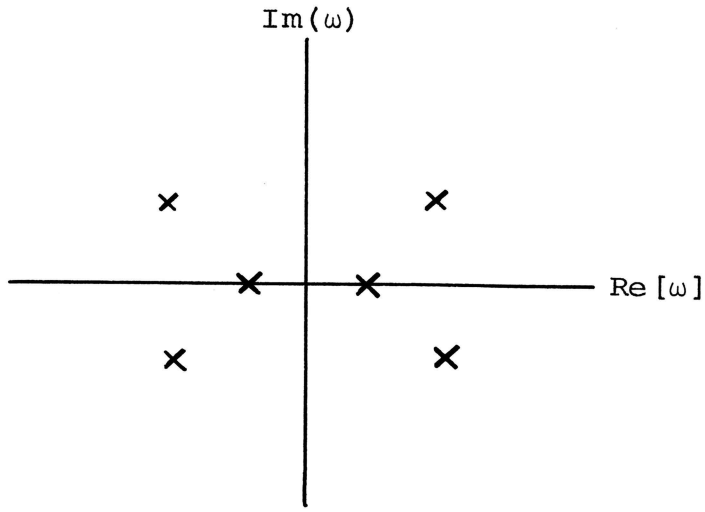

(a) Roots of $P_1(\omega)$

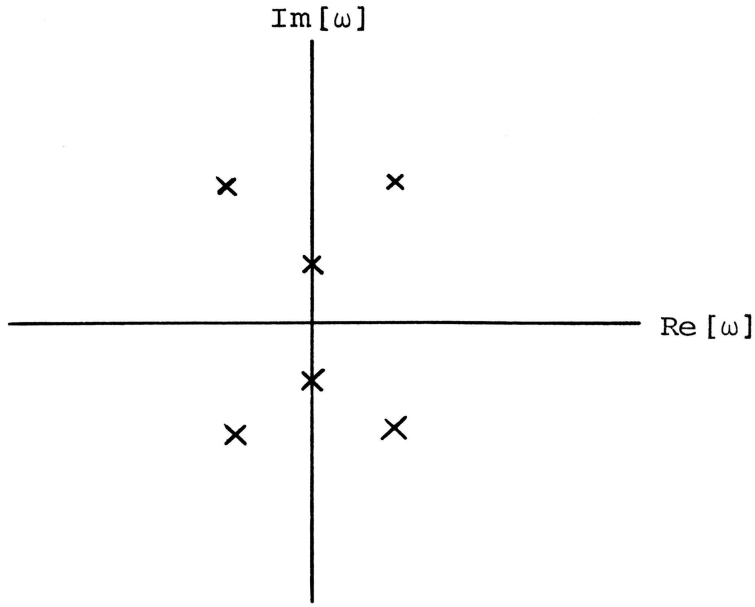

(b) Roots of $P_2(\omega)$

Figure 11. Rotation of Roots for a Typical $P_1(\omega)$

$$
\begin{array}{llll}
-\mu_1 & 14\mu_1-\mu_2+6 & -(49\mu_1+11\mu_2-6\mu_3-6) & 36\mu_1+6\mu_3 \\
-6\mu_1 & 4(14\mu_1-\mu_2+6) & -2(49\mu_1+11\mu_2-6\mu_3-6) & \\
-\frac{1}{3}(14\mu_1-\mu_2+6) & \frac{2}{3}(49\mu_1+11\mu_2-6\mu_3-6) & 36\mu_1+6\mu_3 &
\end{array}
$$

$$
\left[\frac{-\frac{4}{3}(14\mu_1-\mu_2+6)^2 + 4(49\mu_1+11\mu_2-6\mu_3-6)}{-\frac{1}{3}(14\mu_1-\mu_2+6)}\right] \quad \left\{\frac{\frac{2}{3}(14\mu_1-\mu_2+6)(49\mu_1+11\mu_2-6\mu_3-6) + 6\mu_1(36\mu_1+6\mu_3)}{-\frac{1}{3}(14\mu_1-\mu_2+6)}\right\}
$$

$$
\left[\left[\frac{[\quad]\frac{2}{3}(49\mu_1+11\mu_2-6\mu_3-6) + \{\quad\}\frac{1}{3}(14\mu_1-\mu_2+6)}{[\quad]}\right]\right] \quad 36\mu_1+6\mu_3
$$

$$
\frac{[\![\quad]\!]\{\quad\} - (36\mu_1+6\mu_3)[\quad]}{[\![\quad]\!]}
$$

$$
36\mu_1+6\mu_3
$$

Figure 12. Routh array for $P_2(\omega)$ of Example #3.

As can be seen from the Routh array for even this simple example, it is not easy to interpret the region(s) defined by requiring a certain number of sign changes in the left hand column. It is easy however to substitute sets of parameter values into the first two rows and form the Routh array for particular cases. By trial and error, a region can be fairly rapidly and accurately delineated where the criterion is satisfied.

The Popov criterion is satisfied in the Routh array for Example #3 if and only if there are three sign changes in the left hand column. This can be checked rapidly for any set of parameters--more rapidly than a $G^*(j\omega)$ locus can be plotted. This kind of check can also be made readily for criteria involving general Z(s) multipliers.

As a check on the Routh array of Figure 12, the nominal parameter values of Example #3 are substituted into the first two rows, and the rest of the array elements are calculated. From Example #3, $(\bar{\mu}_1, \bar{\mu}_2, \bar{\mu}_3) = (.2, 0, 0)$.

-.2	8.8	-3.8	7.2
-1.2	35.2	-7.6	
2.9333	-2.5333	7.2	
34.163	-4.6545		
-2.1337	7.2		
110.63			
7.2			

There are three sign changes in the left hand column of the above Routh array, as required to satisfy the Popov inequality for Example #3. Now substitute parameter values outside the region R_3 defined in Example #3. Let $(\bar{\mu}_1, \bar{\mu}_2, \bar{\mu}_3) = (.1, 0, 0)$. The Routh array is below.

-.1	7.4	1.1	3.6
-.6	29.6	2.2	
2.4667	.7333	3.6	
29.778	3.0758		
.4785	3.6		
-220.96			
3.6			

There are still three sign changes in the Routh array, illustrating the conservatism of R_3. If however $(\bar{\mu}_1, \bar{\mu}_2, \bar{\mu}_3) = (.01, 0, 0)$, then there is only one sign change, as the following Routh array shows, so that the Popov criterion cannot be satisfied.

-.01	6.14	5.51	.36
-.06	24.14	11.02	
2.1167	3.6733	.36	
24.244	11.030		
2.71	.36		
7.81			
.36			

These results are consistent with the graphical interpretation where it is found that for $\mu_2 = \mu_3 = 0$, $\mu_1 = .025$ is the minimum value of μ_1, which will satisfy the Popov criterion.

B. Curvature of the $G(j\omega)$ Locus--Aizerman and Kalman Conjectures

If the stability of a class of nonlinear systems corresponds to the stability of a related linear system, then one can use the simpler methods of linear analysis to establish regions in parameter space where there is absolute stability. Verifications of the Aizerman and Kalman conjectures establish this correspondence between nonlinear and linear systems.

It is clear from graphical considerations that if the $G(j\omega)$ locus has monotonically decreasing magnitude and always curves in the same direction as ω increases, then a straight line can be drawn through the most remote (from the origin) intersection of the $G(j\omega)$ locus and the negative real axis without intersecting the locus at any other point. The off-axis circle criterion then says that for constant monotonic nonlinearities the Kalman conjecture holds, i.e., if the constant linear system is stable for all gains in the sector [0,K], then so is the nonlinear system for all constant nonlinearities satisfying

$$0 \leq \frac{df(e)}{de} \leq K.$$

To establish the constant direction of curvature of the $G(j\omega)$ locus, the formula for the curvature of a two-dimensional parametric curve is used [52].

$$\mathcal{K} = \frac{\frac{dx}{d\omega} \cdot \frac{d^2Y}{d\omega} - \frac{dY}{d\omega} \cdot \frac{d^2X}{d\omega^2}}{\left[\left(\frac{dX}{d\omega}\right)^2 + \left(\frac{dY}{d\omega}\right)^2\right]^{\frac{3}{2}}}$$

where X and Y are the real and imaginary parts, respectively, of $G(j\omega)$. The numerator polynomial $P(\omega)$ is formed; if the coefficients of all powers of ω have the same sign, that is a sufficient condition (by Descartes' rule of signs) for there to be no positive real roots of $P(\omega)$. In other words the curvature of the locus is never zero. If this test fails, then the Routh array may be formed for $P(-j\omega)$, as was done for the polynomial from the Popov inequality.

A check of the curvature using Descartes' rule has verified the Kalman conjecture for the trivial cases

$$G(s) = \frac{K}{(s+a)^4}$$

and

$$G(s) = \frac{K}{(s+a)^5}$$

and the less trivial cases

$$G(s) = \frac{K}{(s+a_1)^2(s+a_2)}$$

and

$$G(s) = \frac{K}{(s+a_1)^3(s+a_2)}.$$

Verification of the Kalman conjecture for this last case is believed to be an entirely new result. It was not necessary to invoke the Routh criterion.

The computations involved in forming $P(\omega)$ and evaluating the coefficients increase rapidly as the order of the system and the number of distinct poles and zeros increase. Even with the aid of FORMAC, an IBM language for non-numeric machine computation, the analysis becomes impractical for systems with several distinct poles and zeros. The verification for $G(s) = \frac{K}{(s+a_1)^3(s+a_2)}$ required 244K bytes of core storage and about 60 minutes execution time on an IBM 360/50.

Another rather specialized verification of the Kalman conjecture makes use of a distance function in the G(s) plane. Consider the transfer function

$$G(s) = \frac{s^2-a^2}{(s^2+\omega_0^2)(s+b)}$$

along with a nonlinearity, F, which is constant and single-valued.

The verification is based on the off-axis circle criterion of Cho and Narendra [36] for monotonic non-linearities. A distance function is formulated and required

to be always positive in order to satisfy the criterion. This inequality defines a region in parameter space for which the Kalman conjecture holds.

In its present form G(s) is a critical case, having poles on the imaginary axis. G(s) does have stability-in-the-limit, so that an arbitrarily small amount, $\varepsilon>0$, of linear feedback moves the system poles into the left-half plane, and puts the system into the form required for the theorems of Cho and Narendra. This pole shifting transformation yields $G_1(s)$ and F_1.

If the $G_1(j\omega)$ locus lies entirely to the right of a straight line passing through the point $(-\frac{1}{K}+\delta,0)$, $\delta>0$ small, and if the nonlinearity satisfies the conditions

$$0 \le \frac{F_1(e_1)-F_1(e_2)}{e_1-e_2} \le K \qquad \text{for all } e_1 \neq e_2$$

then the system is asymptotically stable, according to Cho and Narendra.

The Hurwitz sector for $G_1(s)$ is

$$\left(-\varepsilon,\ \frac{\omega_0^2 b}{a^2} - \varepsilon\right)$$

$$G_1(s) = \frac{G(s)}{1+\varepsilon G(s)} = \frac{s^2-a^2}{s^3+(b+\varepsilon)s^2+\omega_0^2 s+(\omega_0^2 b-\varepsilon a^2)}$$

$$G_1(0) = \frac{-a^2}{\omega_0^2 b-\varepsilon a^2}\ .$$

It will be shown that under certain conditions the $G_1(j\omega)$ locus lies entirely to the right of a line passing through the point

$$\left(-\frac{a^2}{\omega_0^2 b-\varepsilon a^2} - \delta_1 + \delta, 0\right), \quad \delta_1 > \delta > 0$$

so that the system is asymptotically stable if

$$0 \leq \frac{F_1(e_1)-F_1(e_2)}{e_1-e_2} \leq \frac{\omega_0^2 b-\varepsilon a^2}{a^2+\delta_1(\omega_0^2 b-\varepsilon a^2)} =$$

$$\frac{\omega_0^2 b}{a^2} - \varepsilon - \delta_2, \qquad \delta_2(\delta_1, \varepsilon) > 0.$$

The Hurwitz sector for G(s) is

$$\left(0, \frac{\omega_0^2 b}{a^2}\right)$$

and the corresponding sector for $\frac{dF}{de}$ is

$$\left[\varepsilon, \frac{\omega_0^2 b}{a^2} - \delta_2\right].$$

The difference between these two sectors is arbitrarily small, so that for all practical purposes the Kalman conjecture is satisfied.

Now for simplicity the $G(j\omega)$ locus is considered instead of $G_1(j\omega)$ locus since by continuity arguments they differ by an arbitrarily small amount for any $\omega \neq \omega_0$. $G_1(j\omega_0)$ lies far to the right. In order for the $G(j\omega)$ locus to lie entirely to the right of a straight line, the line must have a slope equal to the slope of the locus asymptote. The slope is $-\omega_0/b$, so that the required line through the point

$$\left(-\frac{a^2}{\omega_0^2 b-\varepsilon a^2} - \delta_1 + \delta,\ 0\right)$$

has for its equation

$$\omega_0^2 bx + \omega_0 b^2 y + (a^2 + \delta_3) = 0, \qquad \delta_3(\delta,\delta_1,\varepsilon) > 0$$

where x and y denote horizontal and vertical coordinates, respectively.

The distance in the $G(s)$ plane between a point of the $G(j\omega)$ locus and the straight line is given by Sherwood and Taylor [52]

$$d = \frac{\omega_0^2 b\ \mathrm{Re}[G(j\omega)] + \omega_0 b^2\ \mathrm{Im}[G(j\omega)] - (a^2 + \delta_3)}{(\omega_0^4 b^2 + \omega_0^2 b^4)^{\frac{1}{2}}} .$$

Requiring $d>0$ for all $\omega \geq 0$ so that the $G(j\omega)$ locus lies to the right of the line leads to

$$2b > \omega_0 \left| 1 - \frac{b^2}{a^2} \right| + \delta_4, \quad \delta_4(\delta_3) > 0 \tag{4.18}$$

as a sufficient condition for the Kalman conjecture to be true. A counterexample [57] to the Aizerman conjecture has $a^2 = .5$, $b = \omega_0 = 1$. These parameters do however satisfy (4.18), illustrating a case where the Kalman conjecture holds when the Aizerman conjecture does not.

Note that for $b = a$ the inequality (4.18) is trivial and may be satisfied for any ω_0. This is a consequence of the fact that the Kalman conjecture holds for all second order systems.

The preceding results are subsumed by the analytical work of Dewey [35], who showed that a transfer function of the form

$$G(s) = \frac{s^2 - a^2}{(s^2 + \omega_0^2)(s+b)}$$

satisfies the Kalman conjecture for all values of a, b, and ω_0^2. Actually, somewhat stronger results were obtained, in that the Aizerman conjecture holds if the nonlinearity is constant, single-valued, and monotonic. The present verification, however, is a new use of a distance function in a graphical interpretation.

The Aizerman conjecture (and hence the weaker Kalman conjecture) is verified in the literature for all first and second order transfer functions [9], for third order

systems without numerator dynamics [53], and for some other special third and fourth order systems [54],[55]. Recently Fujii and Shoji [56] have verified the Aizerman and Kalman conjectures for other third and fourth order transfer functions, whose coefficients satisfy certain relationships.

In general, of course, neither the Aizerman nor Kalman conjecture holds, for counterexamples have been found [57], [58], and an analytical disproof has been given [59]. One of Fitts' counterexamples has

$$G(s) = \frac{s^2}{[(s+.01)^2 + .9^2][(s+.01)^2 + 1.1^2]}$$

which is of the form of the transfer function of a two-stage tuned amplifier [60], demonstrating that practical systems need not satisfy the Aizerman conjecture or the Kalman conjecture.

The verification of the Aizerman and Kalman conjectures is desirable because it allows the use of the methods of linear analysis, such as the root locus technique and the Rough-Hurwitz test, to determine the sector of allowable nonlinearities. The verification of the Kalman conjecture obtained in the present research adds slightly to the class of systems where this conjecture is known to hold. It seems likely that an inductive proof might be possible to verify the Kalman conjecture for all transfer functions with negative real poles and no numerator dynamics.

V. COMPUTER-AIDED DESIGN

A. Area Measure of the Degree of Failure to Meet the Criteria

Earlier uses of a distance function [37]-[39] seemed adequate for the examples considered, but examples can be conceived for which the distance function is ill-suited. Figure 13(a) illustrates such a problem. The solid locus is for the original system parameters. The distance function, d, is taken as the maximum perpendicular distance from points on the locus to the Popov line. Locus frequency ω_1 corresponds to the distance function d. Suppose it is found that perturbation of a particular parameter reduces the distance d from the ω_1 point of the locus to the Popov line. On this basis the parameter is adjusted. The distance d is reduced, but it is not at all clear that the Popov criterion is more nearly satisfied. This adjustment actually makes the criterion more unsatisfied, due to the increase in distance to the Popov line from other frequencies, ω_2 for example. It is thus possible to improve the situation at one frequency, but worsen it at others.

Use of the area function as the basis for parameter adjustment, as shown in Figure 13(b), avoids the preceding difficulty. The area measure includes information about

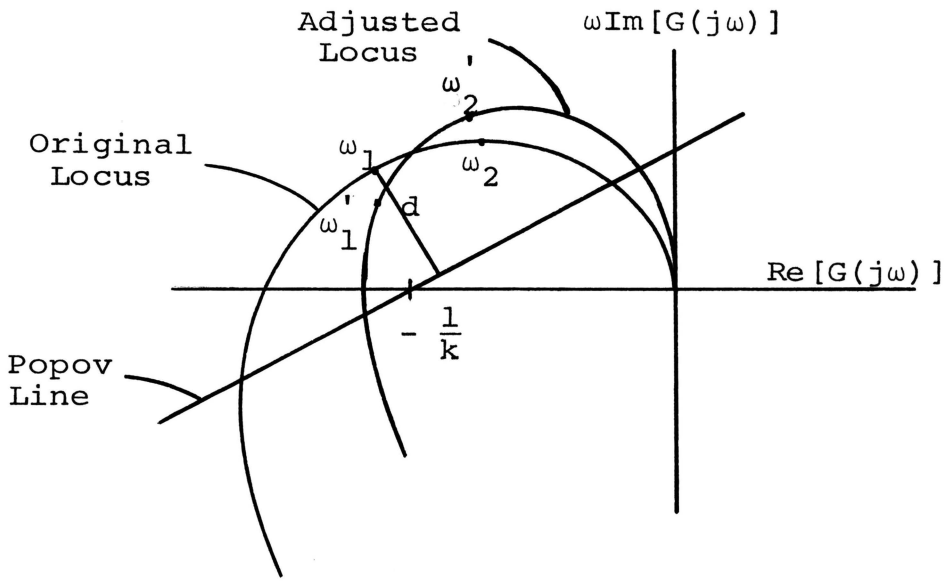

(a) Distance Function, d

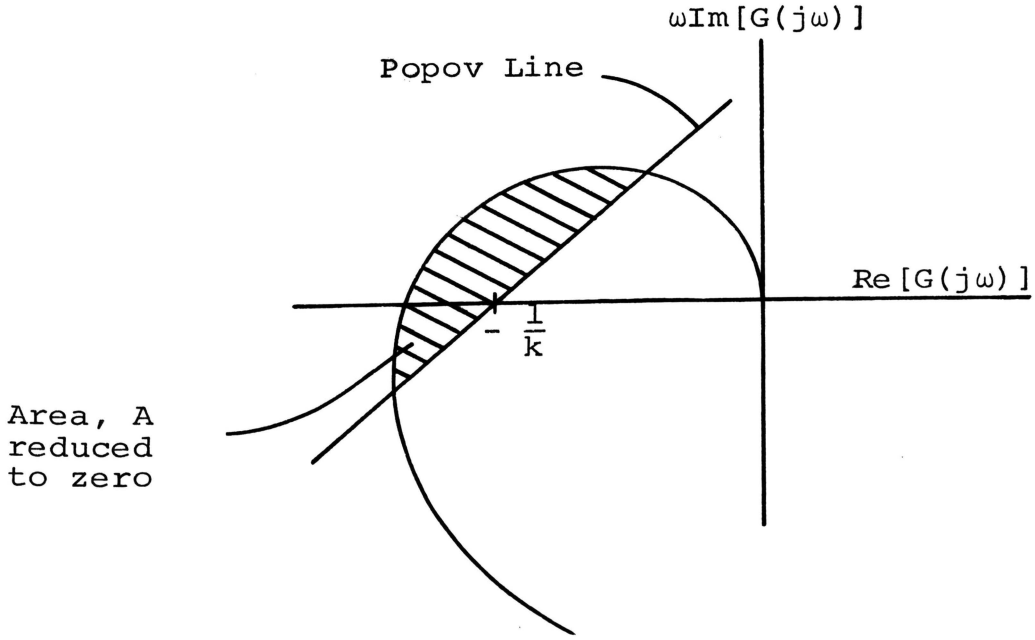

(b) Area Function, A

Figure 13. Distance and Area Functions

the locus at all frequencies where it is to the left of the Popov line and leads to the best overall parameter adjustment for the entire section of the locus. In terms of the number of arithmetic operations required, an area can be calculated about as fast as a maximum distance can be found. The elemental areas summed in the computer programs are shaped as thin horizontal trapezoids in the case of the Popov criterion and as thin radial trapezoids in the case of the circle criterion.

It should be remembered that neither the distance function nor the area function corresponds to any physical system characteristic. The functions are purely artificial guides to direction and amount of parameter adjustment. Fortunately, these functions seem to vary rather smoothly with parameter changes, based on the author's experience with the interactive computer program. In terms of the automatic parameter adjustment, it is found that, for almost all examples considered, the adjustment required is more than what is indicated on the basis of the initial sensitivities. This is as expected, since a parameter value is more directly related to a linear dimension of the $G(j\omega)$ locus than to an area within the locus, which would be more related to the square of the parameter value.

To exploit these relationships it is proposed to use a quadratic curve fitting scheme to estimate parameter values which would just reduce the area function to zero.

After the area function is computed for three parameter values, the second degree polynomial A(p) passing through these three points is determined, so that the roots of the polynomial give an estimate of what value of parameter p causes the area A to vanish. Obviously, only real roots are meaningful, and the root nearest the three known points should be taken.

Trials of this scheme in several examples have produced very closely the parameter value requried to reduce the area function to zero whenever the initial points are all within a factor of two (2) of the value required. Whenever the scheme failed, giving complex roots for A(p), one or more of the initial points differed from the required value by more than a factor of six (6). Example #4 shows, however, that the technique is sometimes successful despite large adjustment requirements. A(p) is formed by constructing the Lagrange polynomial which interpolates at the three known points [61].

While this adjustment technique may speed the reduction of the area function to zero, it precludes the adjustment of more than one parameter during the adjustment procedure. Definition of a multidimentional quadratic polynomial $A(p_1, p_2, \ldots p_k)$ would be the first step in developing an analogous procedure for more accurate adjustment estimates when several parameters are variable. A gradient method could then be used to find the best combination of parameter adjustments. This scheme, of course, hinges on

$A(p_1, p_2, \cdot \cdot \cdot p_k)$ being a true relationship between the area function and the parameters.

Example #4:

$$G(s) = \frac{5s^2}{(s+p)(s+2)(s+3)}; \quad p = 1; \quad q \text{ unrestricted.}$$

Applying the Popov criterion with a nonlinearity in the sector [0,20] yields a minimum of the area function of $A_{min} = .01975$ at $q = 0$. It is decided to guarantee absolute stability by adjusting p. Perturbation of p yields the data

$$A(.9) = .01854$$
$$A(1.0) = .01975$$
$$A(1.1) = .02066.$$

Forming the second degree Lagrange polynomial which passes through these points, and taking the root nearest $p = 1$ gives a parameter estimate of $p = .1527$ for absolute stability. It is verified that the adjustment actually required for absolute stability in the sector [0,20] is $p = .12$.

(End of Example #4.)

B. Degree of Stability

The concept of stability is improved in its usefulness by the extension to specify a degree of stability. A response $y(t)$ is defined to be asymptotic of degree α if and only if

$$\int_0^\infty [e^{\alpha t}\, y(t)]^2\, dt < \infty.$$

All the Popov type stability theorems can be used to establish stability of degree α if the $G(-\alpha+j\omega)$ locus is used, and if the linear part is output stable of degree α [10].

There is a very close relationship between degree of stability and the linear system concept of settling time. Results concerning degree of stability thus help to characterize the transient response of the nonlinear system. The difference between the guaranteed degree of stability and the experimental degree of stability can be taken as a measure of the conservatism of the Popov criterion in a particular problem.

Example #5:

$$G(s) = \frac{4}{(s+.2)(s+b)(s+c)}.$$

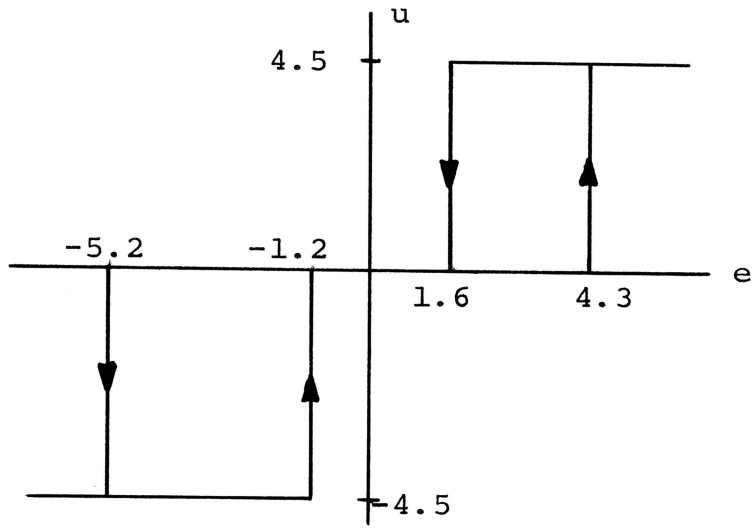

(a)

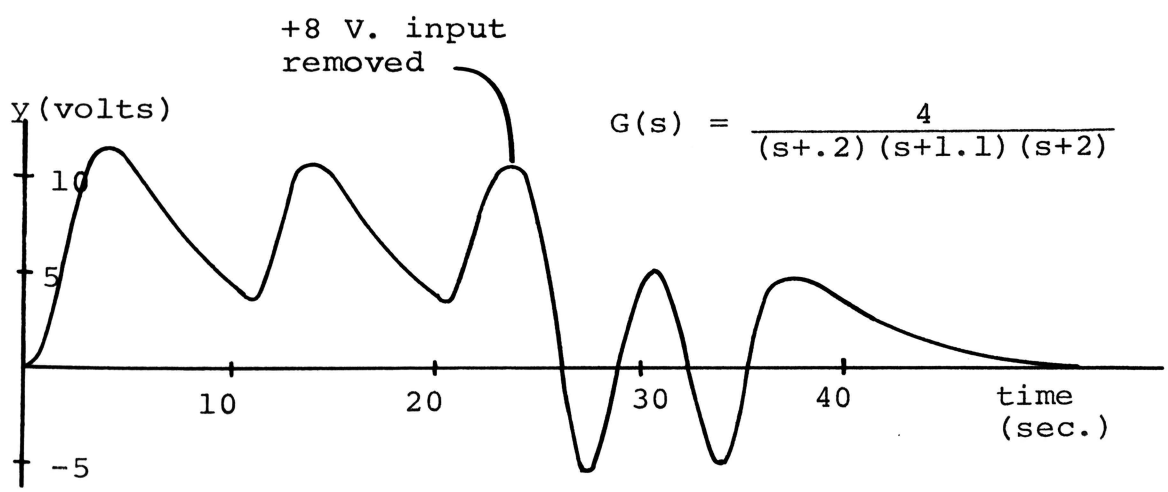

Figure 14. Nonlinear Characteristic and Transient Response for Example #5.

The nonlinear characteristic is shown in Figure 14(a). During analog simulation it is found that $b = 1.1$ and $c = 2.0$ is barely sufficient for a stable (degree zero) response. Due to the discontinuous nature of the nonlinear characteristic, the degree of stability α (or asymptoticity) of the response is discontinuous with respect to parameter changes at $\alpha = 0$. As long as the relay switching action continues following removal of input, the settling time is comparatively long, as determined by looking at the two negative peaks in Figure 14(b). After the response has decayed to the point where the relay output is always zero, the settling time is faster. The degree of stability is defined by this later or ultimate settling time. It appears that this design has a degree of stability of about $\alpha = .2$. Illustrating the conservatism of the Popov criterion, it is required that $b = 6.4$, $c = 2.0$ to guarantee stability of degree $\alpha = .2$ for all passive hysteresis characteristics in the sector [0,3.75].

(End of Example #5.)

C. Stronger Results Obtained as the Nonlinearity is Restricted

In the following example the same G(s) is analyzed for stability for several successively smaller, more specific, classes of nonlinearities. The results illustrate that

stronger results, i.e., larger sector bounds, can generally be obtained as the nonlinearity is more precisely specified.

Example #6:

A transfer function considered by Dewey and Jury [62] is representative of the frequency response of many compensated feedback servosystems. The relevant loci are shown in Figure 15.

$$G(s) = \frac{40}{s(s+1)(s+.8s+16)} .$$

For a general time varying nonlinearity it is required that $q = 0$ in the Popov criterion, leading to a Popov sector determined by

$$\min_{\omega} \operatorname{Re}[G(j\omega)] = \lim_{\omega \to 0} \operatorname{Re}[G(j\omega)] = -2.625$$

So for stability $u/e \varepsilon [\varepsilon, .381]$, where $\varepsilon > 0$ and arbitrarily small. This same Popov sector also applies to constant nonlinearities with passive hysteresis, requiring $-\infty < q \leq 0$. For constant single-valued nonlinearities or constant nonlinearities with active hysteresis, the Popov sector is $[\varepsilon, .65]$. If the nonlinearity is further restricted to single-valued monotonic slope-bounded characteristics, analysis in the G plane yields superior results, defining a stability sector of $\varepsilon \leq du/de \leq 1.23$. In the G**

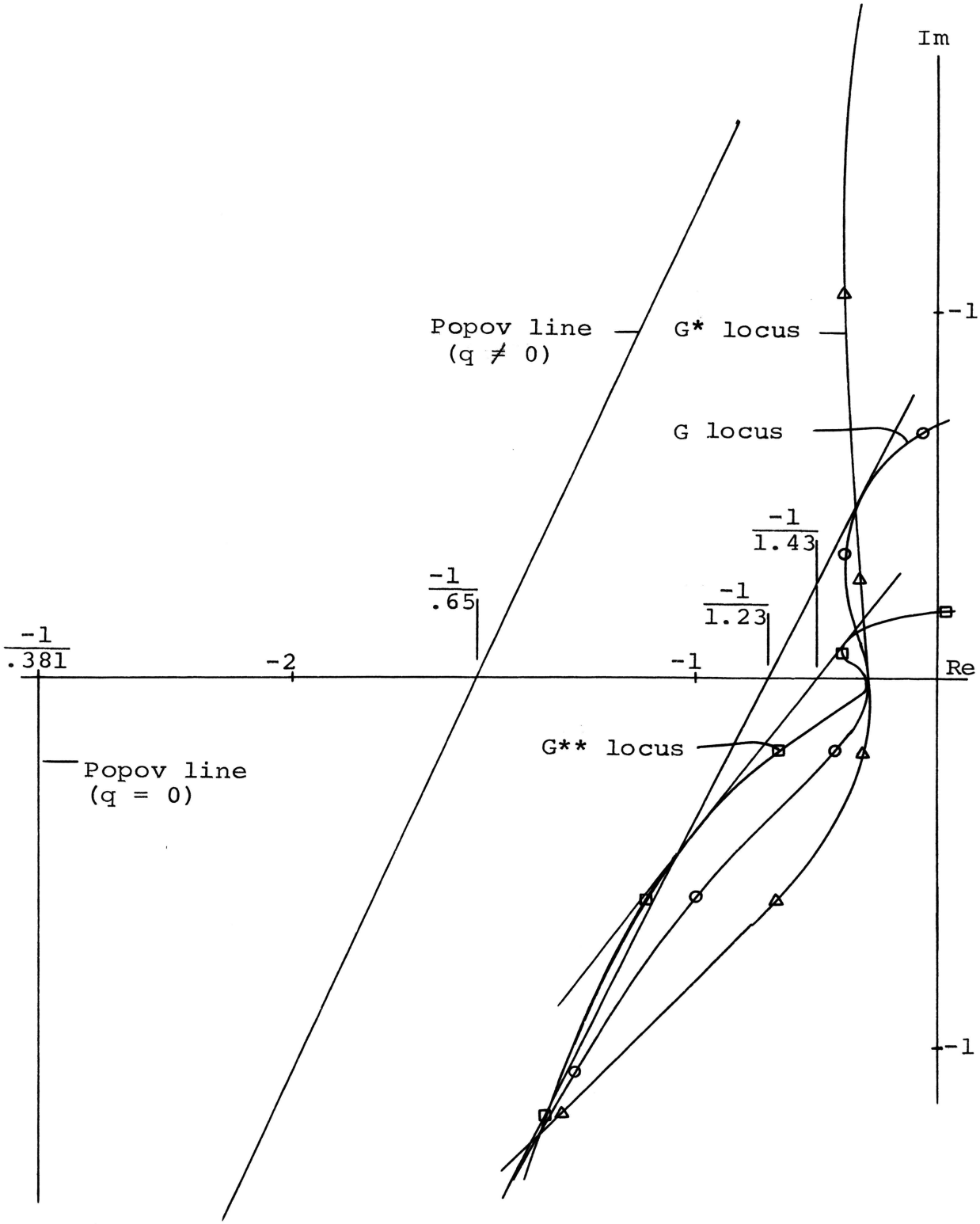

Figure 15. G,G*, and G** Loci for Example #6.

plane the stability sector is $\varepsilon \leq du/de \leq 1.43$, which is a further improvement over the basic Popov sector. For linear characteristics the Hurwitz sector is (0,1.75).

(End of Example #6.)

D. Determining Parameter Adjustments

In determining the parameter adjustments to most efficiently reduce the area function, A, or other error measure, the sensitivities may be weighted according to the normalized "cost" of adjusting the respective parameters. The desirability, L_i, of adjustment of parameter p_1 can thus be expressed by

$$L_i = \frac{p_i}{c_i} \frac{\partial E}{\partial p_i}$$

where c_i is the relative cost of adjusting parameter p_i and E is the error measure. The partial derivative is estimated numerically by examining the effect of parameter perturbations, usually 1%, on A. The final design is optimal in the sense that the parameter most "cost efficient" in reducing A is adjusted at each step. This is no guarantee however that the design obtained has the lowest possible total cost.

There may be hard constraints on the values that may be taken by the adjustable parameters. When a parameter value reaches its constraint as a result of the adjustment

procedure, the parameter effectively becomes fixed, and its adjustment is no longer considered in the automatic adjustment routine.

The computer program thus determines the desirability, L_i, of adjusting each variable parameter and selects for adjustment the parameter with the greatest L_i. The amount of adjustment per step is determined by the user, who specifies that the error function shall be reduced by a certain fraction, 1/N, of its original value with each step of the adjustment. To meet this specification the routine uses the parameter sensitivity to determine the amount of adjustment required. Before each step the L_i are recomputed. Any parameters which reach hard constraints are exempted from further adjustment in subsequent steps.

VI. SHORT STEPS BEYOND CONTROL AND OUTPUT ASYMPTOTICITY

The purpose of this chapter is to indicate the scope of the results that can be obtained with the aid of the interactive program. By themselves the Popov-type criteria can establish control and output asymptoticity. With a few further restrictions, additional results often follow, e.g., global asymptotic stability, BIBO stability, and process stability.

A. Popov Theorems

Control and output asymptoticity refers to the asympotic behavior of the input and output respectively of G(s). A system is output asymptotic of degree α if for every set of initial conditions

$$\int_0^\infty [e^{\alpha t}y(t)]^2 dt < \infty.$$

A similar definition holds for control asymptoticity. If a system of the standard form of Figure 1 is control asymptotic of degree α and the linear part is output stable of degree α then

$$\lim_{t\to\infty} e^{\alpha t}y(t) = 0.$$

A linear part G(s) is said to be output stable of degree α if for every set of initial conditions the impulse response g(t) and the initial condition response $y_0(t)$ satisfy the relations [10]

$$\int_0^\infty [e^{\alpha t} g(t)]^2 dt < \infty, \qquad \int_0^\infty e^{\alpha t} \left| g(t) \right| dt < \infty$$

$$\int_0^\infty [e^{\alpha t}\ y_0(t)]^2 dt < \infty, \quad \int_0^\infty [e^{\alpha t}\ \dot{y}_0(t)]^2 dt < \infty$$

$$\left| e^{\alpha t}\ y_0(t) \right| < \infty \qquad 0 \le t \le \infty.$$

A system may be control and output asymptotic and yet fail to be asymptotically stable if, for example, there are unstable dynamic modes within the linear part which are unobservable. For systems of the form of (1.1), a necessary and sufficient condition for complete observability is that there be no pole-zero cancellation in $c(sI-A)^{-1}$, and hence none in $G(s) = -c(sI-A)^{-1}B$. Ogata [63] gives a detailed treatment of observability and the related "dual" concept of controllability.

A sufficient condition for global asymptotic stability is satisfaction of a Popov type criterion for $0<K<\infty$ and $0 \le q < \infty$, plus $\mathrm{Re}[\lambda_i]<0$ for all the eigenvalues λ_i of the system matrix A [10]. The Popov criterion requirement that G(s) be output stable means that all eigenvalues corresponding to observable states must have negative real parts. Beyond the Popov criterion, the only restriction here on the eigenvalues is that those corresponding to unobservable states have negative real parts. Thus for a completely observable G(s), satisfaction of the Popov criterion with $0<K<\infty$ and $0 \le q < \infty$ is sufficient for global asymptotic stability.

If G(s) is rational and the nonlinearity is constant, single-valued, and piece-wise continuous, then the restriction $0 \leq q < \infty$ may be dropped from the requirements for global asymptotic stability. Any real finite q is allowed in such cases [9].

B. BIBO Stability

A system is said to possess bounded input bounded output (BIBO) stability if, for all bounded inputs, the corresponding outputs are also bounded. BIBO stability can be established if a system satisfies a Popov type theorem for control and output asymptoticity of degree $\varepsilon > 0$, and G(s) is output stable of degree ε. For systems which by the Popov criterion are control and output asymptotic of degree zero, having G(s) which are analytic functions of s along the $j\omega$ axis, control and output asymptoticity of degree ε is established as follows.

It is known that G(s) is output stable of degree zero. This implies that the eigenvalues λ_i all have negative real parts. So for finite dimensional systems and infinite dimensional systems with $Re[\lambda_i]$ bounded away from zero, there exists some sufficiently small $\varepsilon_1 > 0$ such that

$$\mathrm{Re}[\lambda_i] < -\varepsilon_1 < 0 \quad \text{for all } i.$$

So G(s) is output stable of degree $\varepsilon_1 > 0$. The other requirement is that the $G^*(-\varepsilon + j\omega)$ locus lie entirely to the right of the Popov line. Given the $G^*(j\omega)$ locus lies entirely to the right without intersecting the Popov line, analyticity of the $G^*(s)$ function implies that there exists a sufficiently small $\varepsilon_2 > 0$ such that the $G^*(-\varepsilon_2 + j\omega)$ locus also lies entirely to the right of the Popov line. Take $\varepsilon = \min(\varepsilon_1, \varepsilon_2)$, and the system is control and output asymptotic of degree $\varepsilon > 0$.

A sufficient condition for a composite system to be BIBO stable is that it be an additive interconnection of subsystems each of which is BIBO stable and that the interconnection be such that all loops pass through a nonlinear characteristic with hard saturation.

For example, consider the composite system of Figure 16. Suppose that inputs r_1 and r_2 are bounded and that subsystems s_1, s_2, and s_3 are BIBO stable. The output of s_2 is bounded even for unbounded input, σ_2, due to the hard saturation characteristic. The input to s_1, σ_1, being the sum of two bounded signals, is bounded. The output of s_1 is also bounded, due to the BIBO stability of s_1. Since the input to s_3 is bounded, so is the output of s_3. Thus the outputs of the

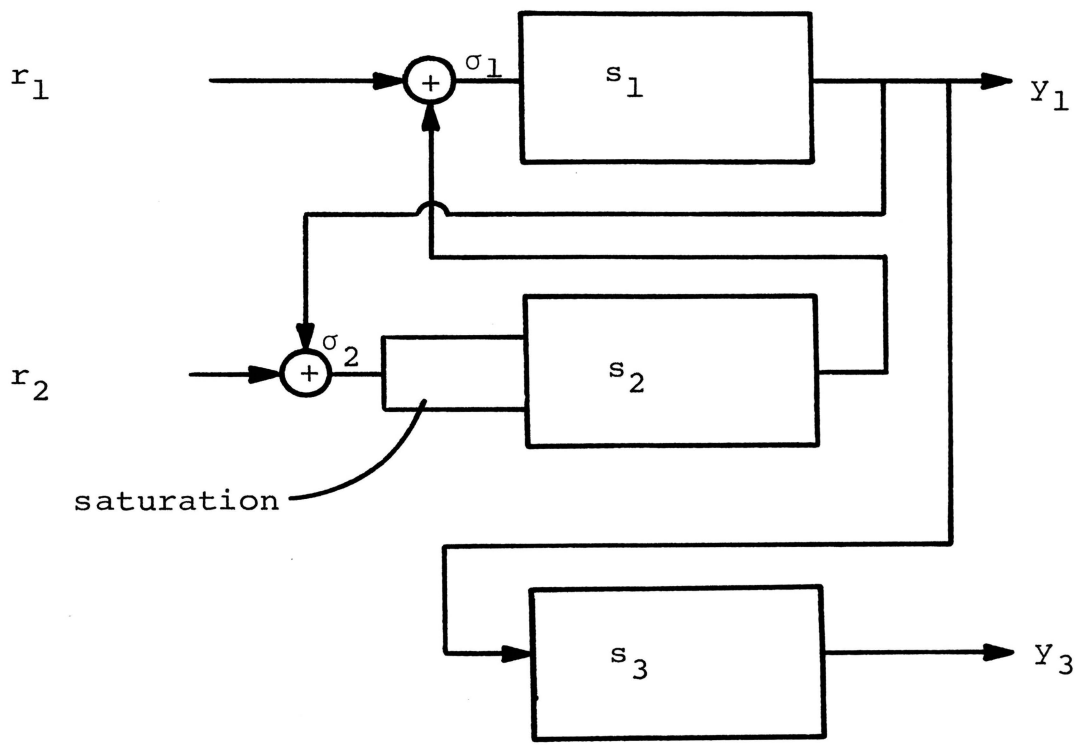

Figure 16. BIBO Stability of a Composite System

composite system are bounded for bounded inputs. The reasoning is easily generalized for other configurations.

It may be much easier to establish BIBO stability for the individual subsystems by the Popov-type methods than to establish BIBO stability directly for the composite system. Pole shifting might be useful to establish the hard saturation characteristics where needed.

C. Process Stability

The same parameter adjustment procedure used to stabilize a system with no input can also be used to establish the stability of the forced solution (process stability) [10]. With process stability the actual forced solution $y(t)$ approaches the nominal forced solution $y_n(t)$ as $t \to \infty$, despite bounded input disturbances $\Delta r(t) \varepsilon L_2$.*

---

* $\Delta r(t) \varepsilon L_2$ if and only if $\int_0^\infty |\Delta r(t)|^2 \, dt < \infty$

For process stability the derivative of the nonlinearity, du/de, is bounded in a sector, $[k_1,k_2]$, generally a larger sector than that bounding the nonlinearity itself. The critical circle is centered on the real axis of the G plane and passes through the $-1/k_1$ and $-1/k_2$ points. Pole shifting can transform the critical circle to a vertical line. Process stability is a more stringent requirement than global asymptotic stability of the unforced system.

Example #7:

$$G(s) = \frac{50}{(s-1)(s+3)(s+4)} .$$

The nonlinear characteristic is shown in Figure 17(a). Pole shifting by an amount .171 puts the nonlinearity into the sector [0,.662]. The Popov criterion is satisfied for stability when the parameters of the linear part are adjusted until the original G(s) is

$$G(s) = \frac{50}{(s-.71)(s+3)(s+4)} .$$

The slope of the pole shifted nonlinearity is contained in the sector [0,2.05]. Satisfaction of the Popov criterion for this sector with q = 0 guarantees process stability. To meet this condition parameters are further adjusted until the original G(s) is

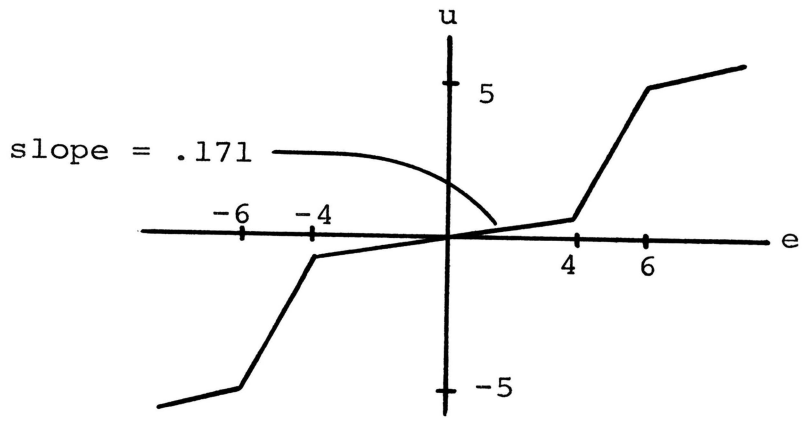

(a)

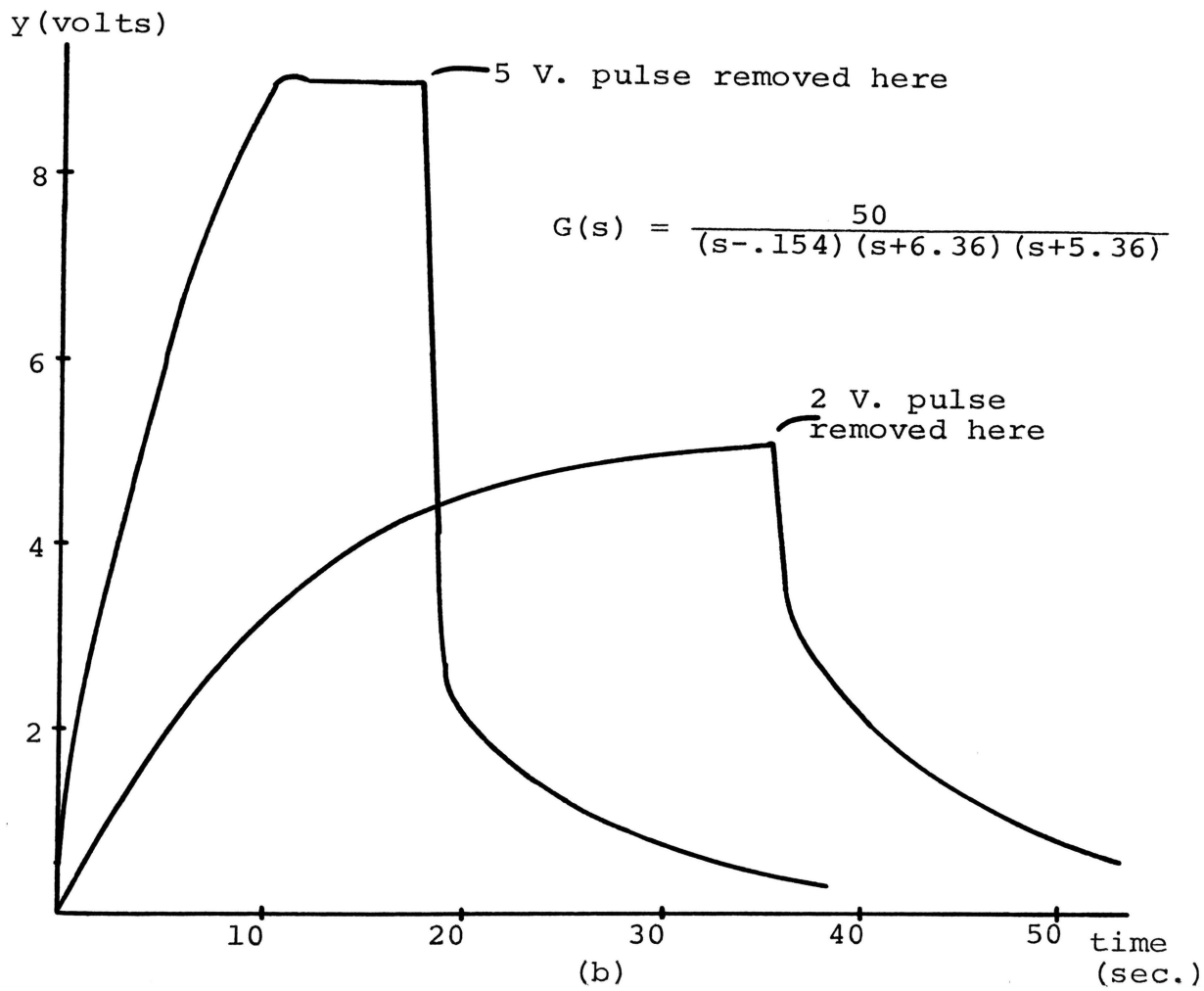

(b)

Figure 17. Nonlinear Characteristic and Transient Response for Example #7 With Process Stability

$$G(s) = \frac{50}{(s-.154)(s+6.36)(s+5.36)} .$$

Transient responses for this design are shown in Figure 17(b).

(End of Example #7.)

D. Instability Theory--Oscillators

Analogous to the Popov and circle criteria for stability, Brockett and Lee [64] developed geometric conditions involving the $G(j\omega)$ locus sufficient for instability. One of these instability theorems is applied in the following oscillator design problem.

Example #8:

The system is in the standard form of Figure 1 with

$$\frac{u}{e} \in [1.176, 2.222]; \qquad G(s) = \frac{2}{(s+1)(s^2+.707s+.25)} .$$

Stability cannot be established by the frequency domain methods, but one cannot conclude from this that the system is unstable. However, applying one of the instability theorems of Brockett and Lee [64] establishes definitely that the system is unstable.

In Figure 18, the $G(j\omega)$ locus encircles without touching (in the CCW direction) the circle centered on the real

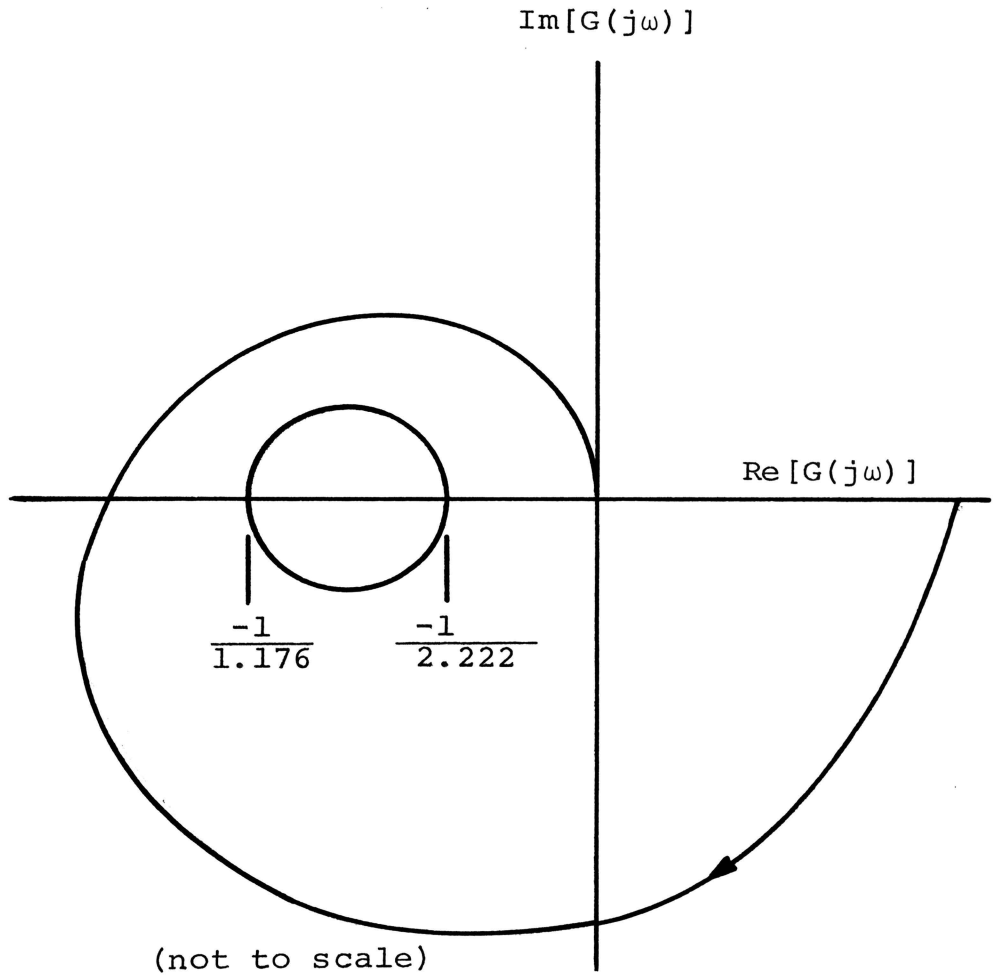

Figure 18. Instability for Example #8

axis passing through -1/1.176 and -1/2.222 fewer times (-1) than the number of poles of G(s) in the right half plane (0). It follows from the instability theorem that there exists some set of initial conditions for which the unforced response is unbounded. Note that the nonlinearity is unspecified except for its sector. The system is unstable for any characteristic in that sector, so that we have an absolute instability analogous to absolute stability.

(End of Example #8.)

VII. REPRESENTATIVE EXAMPLES AND COMPARATIVE RESULTS

The capability of the interactive computer program is further demonstrated in some of the examples of this chapter. Discussion of the results gives an indication of the conservatism of the stability criteria under various circumstances.

A. Conservatism of the Criteria

1. Time-Stationary Systems

The Popov-type stability criteria give sufficient conditions for absolute stability of classes of nonlinearities. The examples studied indicate that the conservatism of a criterion is inversely related to the degree that the class is specified. Criteria for constant single-valued monotonic nonlinearities, for example, yield results such that it is difficult to find systems not satisfying the criteria which are nevertheless stable.

Example #9:

$$G(s) = \frac{K}{(s+a)(s^2+2\zeta\omega_n s+\omega_n^2)} .$$

The nonlinearity is a saturation characteristic shown in Figure 19(a). As shown in Figure 19(b), there is very close agreement between parameter sets barely satisfying the Popov criterion and sets found during analog simulation

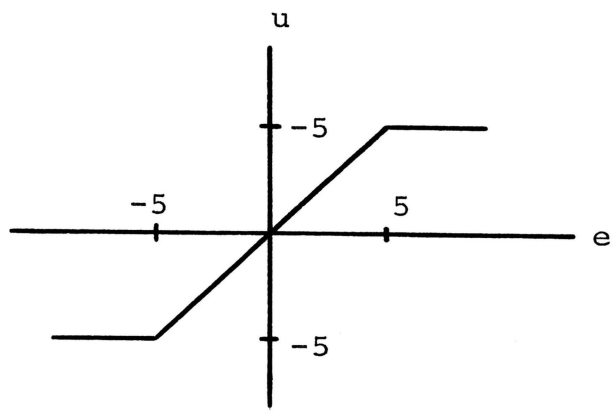

(a)

Parameters of G(s)

	K	a	ζ	ω_n
Experimentally stable sets	1.35	1	.707	.5
	2	1.41	.707	.5
	2	1	.960	.5
	2	1	.707	.7
Sets satisfying Popov criterion	1.32	1	.707	.5
	2	1.51	.707	.5
	2	1	1.116	.5
	2	1	.707	.697

(b)

Figure 19. Nonlinear Characteristic and Stable Parameter Sets for Example #9

to produce barely stable responses.

(End of Example #9.)

On the other hand the criterion for an asymmetric nonlinear characteristic with hysteresis yields very conservative results.

Example #10:

$$G(s) = \frac{K}{(s+p_1)(s+p_2)(s+p_3)}$$

$$= \frac{4}{(s+.2)(s+.5)(s+2)} .$$

As shown in Figure 20(a), the nonlinear characteristic has passive hysteresis, so q is restricted by $-\infty<q\leq 0$. With this restriction the Popov criterion yields a maximum value of K for absolute stability of K_{max} = .35 (total "gain" = .35 x 4.5/1.2 = 1.31). For a linear characteristic of gain 4.5/1.2 = 3.75 in place of the nonlinearity, the maximum K for stability is K_{max} = 1.027. A positive q, if allowed, would yield K_{max} = 1.027. Zero shifting, to eliminate the hysteresis and permit positive q's, is not possible because the characteristic is not odd. For comparison purposes, zero shifting is applied as outlined in Chapter III, D to the similar odd characteristic of Figure 20(b), and K_{max} = 1.02 is obtained.

During analog simulation it is found that $K\leq 1.72$ stabilizes the system. Other sets of experimentally obtained stable

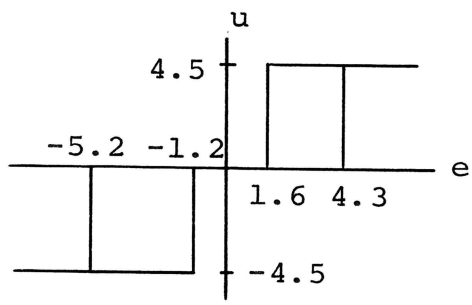

(a)

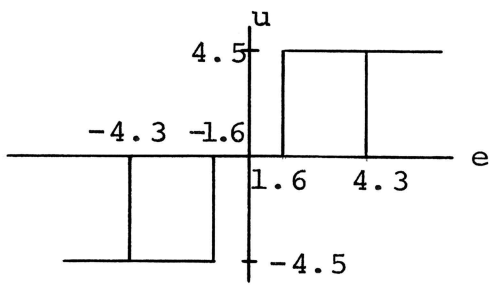

(b)

	Parameters of G(s)			
	K	p_1	p_2	p_3
Experimentally stable sets	1.72	.2	.5	2
	4	.68	.5	2
	4	.2	1.1	2
	4	.2	.5	3.6
Sets satisfying Popov criterion	.35	.2	.5	2
	4	2.6	.5	2
	4	.2	3.5	2
	4	.2	.5	20

(c)

Figure 20. Nonlinear Characteristics and Stable Parameter Sets for Example #10

parameters are listed in Figure 20(c). During simulation much smaller parameter adjustments stabilize the system than are called for by the Popov criterion. There is no proof for the stability of these apparently stable designs, but simulation with a variety of large initial conditions, both on the analog computer and using the digital IBM Continuous System Modelling Program (CSMP), gives responses which all approach the origin asymptotically.

(End of Example #10.)

Very recently Rootenberg and Walk [65] discussed the question of system behavior when the constant, odd, monotonic, differentiable, memoryless nonlinearity lies between the Popov and Hurwitz sectors. They obtained results offering a tradeoff between the "amount" by which the Popov criterion may be violated and the guarantee that, if a limit cycle exists, it must be at a fundamental frequency below a certain value.

2. Time-Varying Systems

The restriction of $q = 0$ in the Popov criterion for time-varying systems tends to increase the conservatism of the criterion for most nonlinearities, as Example #11 will show. The criterion must hold for the "worst" nonlinearities of the class, i.e., those characteristics for which the conservatism of the criterion is minimal.

General time-varying nonlinearities, being the largest class, will in general include characteristics

which are "worst", while the smaller, more precisely defined classes of characteristics exclude some of the "worst" characteristics.

Suppose, for example, that the nonlinear characteristic is a time-varying gain, K(t). G(s) is such that a periodic K(t) of frequency ω_0 tends to excite oscillation, while for any other type of characteristic the system is absolutely stable. The Popov criterion with q = 0 must accommodate K(t) of frequency ω_0, and thus yield conservative results for other characteristics.

With the nonlinearity restricted to constant single-valued characteristics, the singular "worst" case is eliminated from consideration. There is no other special characteristic to be accommodated by the criteria for this smaller class. This leads to much less conservatism for typical characteristics of the smaller class. Consider the following parametric amplifier.

Example #11:

The parametric amplifier circuit of Figure 21(a) is described by the equation

$$i(t) = \int_0^t y(t-\tau)\ v(\tau)\ d\tau + \frac{d}{dt}\ [C_1(t)\ V(t)]$$

where y(t) is the impulse response of Y(s). The circuit is represented in block diagram form in Figure 21(b). In the absence of any input the circuit can be put into the

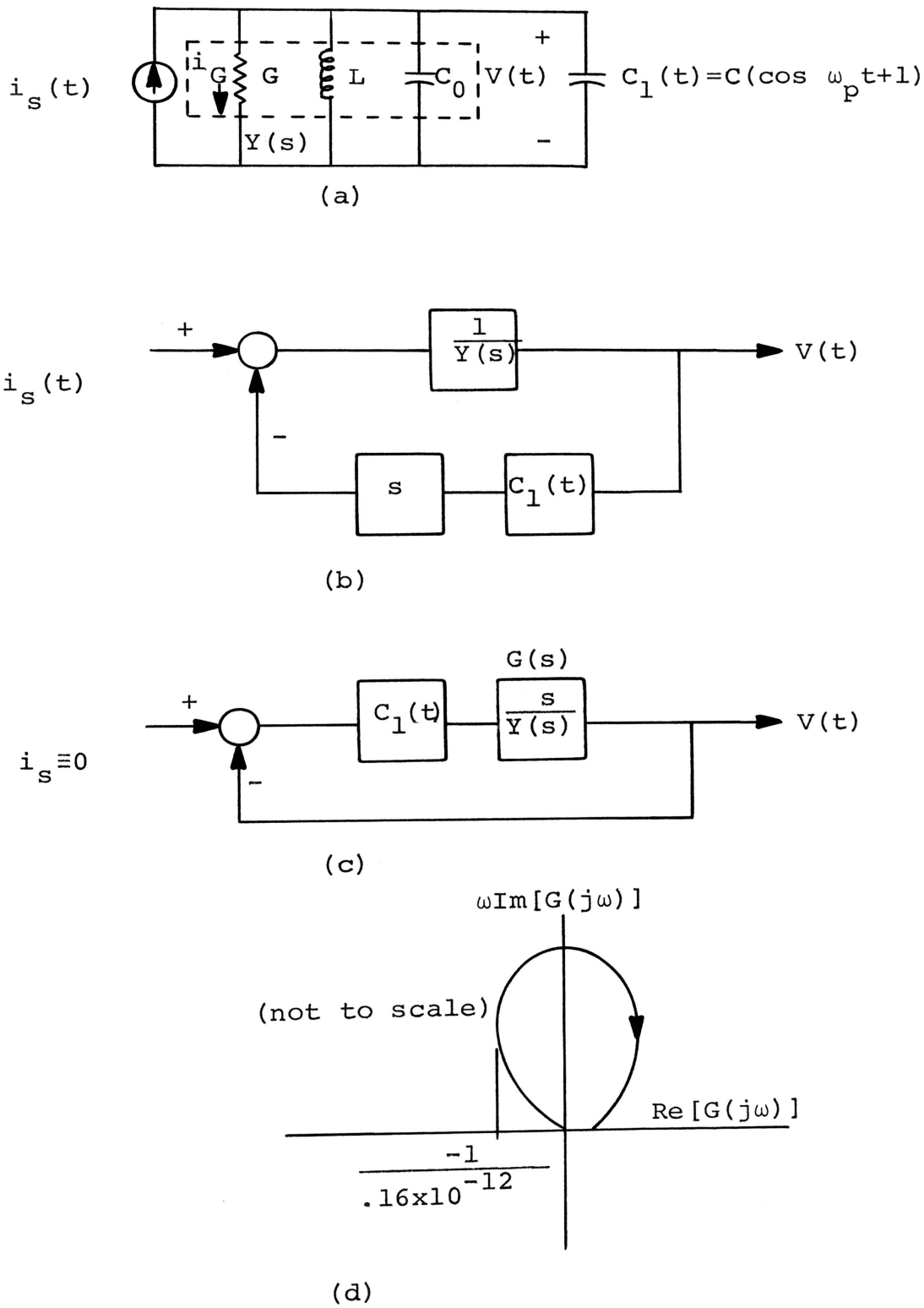

Figure 21. Parametric Amplifier of Example #11

standard form for application of the Popov criterion, as shown in Figure 21(c). The linear part is

$$G(s) = \frac{s}{Y(s)} = \frac{(\frac{1}{C_0})\ s^2}{s^2 + (\frac{G}{C_0})\ s + \frac{1}{LC_0}}$$

and has a $G^*(j\omega)$ locus shown qualitatively in Figure 21(d), for $C_0 = 3$ pf, $G = 10^{-4}$ mho, and $L = .25$ μh.

Since the capacitor $C_1(t)$ is time-varying the Popov line must be vertical, giving a Popov sector of [0,.16] pf for $C_1(t)$. A time-invariant C_1, however, could be nonlinear and arbitrarily large and still the circuit would be absolutely stable by the Popov criterion with $q \neq 0$.

Desoer and Kuh [66] give an equation for the current gain $I_G(s)/I_s(s)$ whose denominator vanishes for certain component values, pump frequency ω_p, and signal frequency. This means that under certain conditions an ouput current can exist in the absence of an input current i_s, which is just the sort of instability the Popov criterion cannot rule out.

(End of Example #11.)

3. When the Popov and Hurwitz Sectors Are the Same

The Popov criterion is not at all conservative if the Popov sector is the same as the Hurwitz sector. In this

case the Aizerman conjecture holds, and the absolute stability of the nonlinear system corresponds exactly to the stability of the autonomous linear system with gain at the upper bound of the sector. The stability criteria for such linear systems are perfectly sharp, i.e., the system can be proven either absolutely stable or unstable, with no uncertainty or conservatism. Thus the absolute stability of the nonlinear system can also be definitely established one way or the other, without conservatism.

4. Stability of Degree α

Though no examples have been found, it is conceivable that under certain circumstances the conservatism of a stability criterion applied to a particular problem can be demonstrated analytically. Suppose it is desired only to establish stability of degree zero, and the Popov criterion yields a Popov sector smaller than the Hurwitz sector. From the definition of stability of degree α, it is clear that a system stable of degree $\alpha>0$ must also be stable of degree zero. So the Popov criterion is overly conservative if it yields a Popov sector for stability of degree zero equal to or smaller than the Popov sector for stability of degree $\alpha>0$.

Several transfer functions having loci such that the Popov sector is smaller than the Hurwitz sector have been examined for stability of degree $\alpha>0$. Among those considered were

$$G(s) = \frac{s^2-.5}{(s^2+1)(s+1)}$$

$$G(s) = \frac{40}{s(s+1)(s^2+.8s+16)}$$

$$G(s) = \frac{s+2}{s(s+.5)(s^2+3.2s+64)} .$$

In each case the Popov sector is smaller for stability of degree $\alpha>0$ than for stability of degree zero.

For the $G^*(j\omega)$ locus for an output stable $G(s)$ the $G^*(-\alpha+j\omega)$ locus ($\alpha>0$) will intersect the real axis farther to the left, as shown in Figure 22. This follows from consideration of the Nyquist criterion for linear systems. The line segment from the intersection of the $G(-\alpha+j\omega)$ locus with the real axis to the origin corresponds to the range of gains for which the linear system is not stable of degree α. The degree of stability α increases from zero as the gain K decreases slightly from the value where $\alpha=0$. The $G(-\alpha+j\omega)$ locus must intersect the real axis farther to the left than the $G(j\omega)$ locus. Also then, the $G^*(-\alpha+j\omega)$ locus must intersect the real axis farther to the left than the $G^*(j\omega)$ locus.

The Popov line, however, may be determined by points on the locus other than the intersection with the real axis. To the author's knowledge the possibility of the situation shown in Figure 22 is not excluded, where the

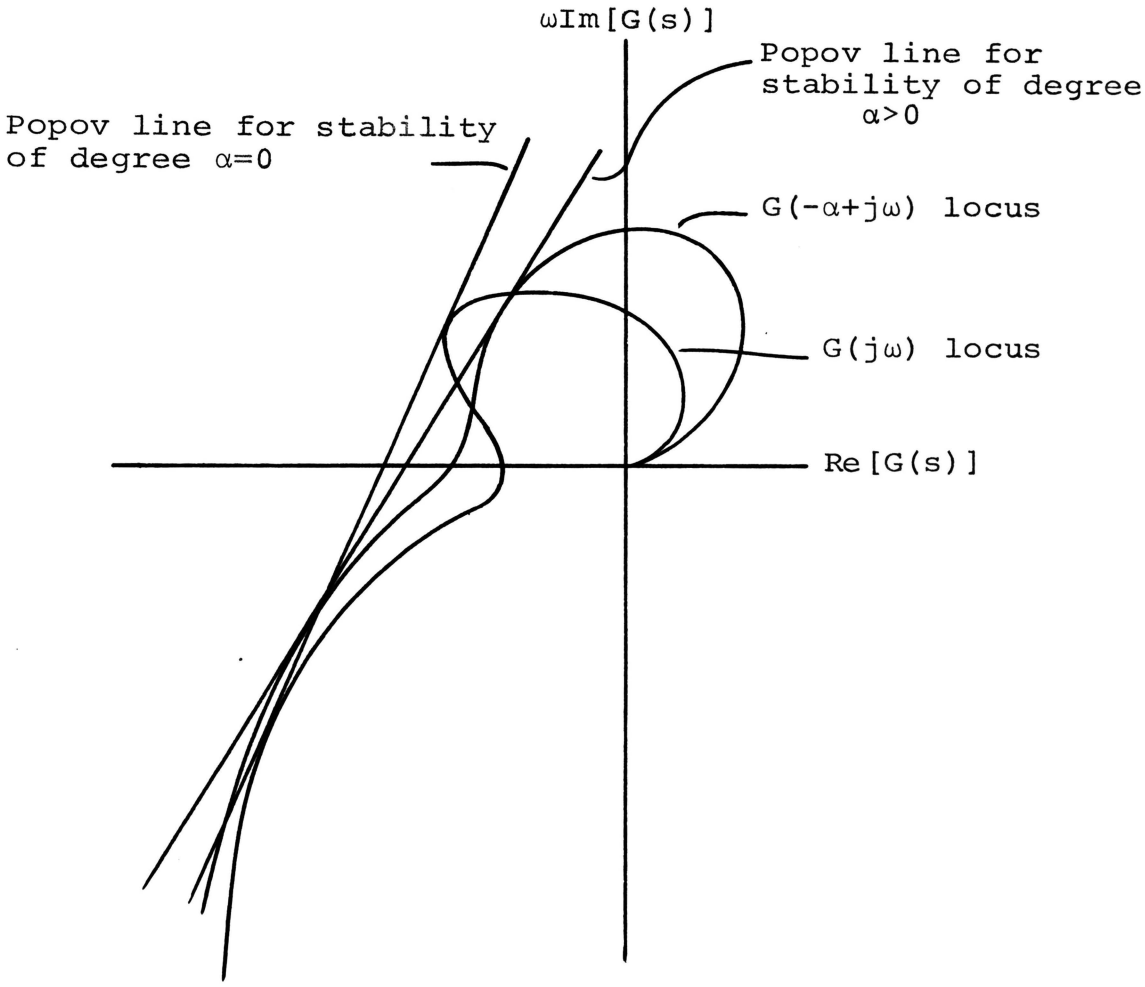

Figure 22. Stability of Degree α

Popov sector for stability of degree $\alpha>0$ is greater than the Popov sector for stability of degree $\alpha=0$. In such cases the Popov criterion for stability of degree zero is clearly overly conservative.

B. Criteria With General Z(s) Multipliers

There are basically two systematic approaches for the application of stability criteria involving general Z(s) multipliers. Both are means of establishing that the expression

$$Z(s)^{\pm 1}\ [G(s) + 1/K]$$

is positive real. The graphical approach, by the procedures of [41]-[44], relies heavily on the user's skill and intuition in working with the classical graphical techniques of linear systems analysis, such as the Bode plot and the Nichols chart. The other approach is entirely analytical, making use of a Routh array as discussed in Chapter IV, and involves trial and error calculations, which can be quite extensive. The graphical approach may be preferred by experienced control engineers working with simpler forms of Z(s) multipliers, while the analytical approach is easily automated and capable of handling more complicated Z(s) multipliers with little extra user effort.

The graphical approach developed by Murphy [42] consists of the following steps. Complications arising when there are poles of G(s) on the imaginary axis have been omitted here.

1) Plot the Bode diagram for $[KG(s)]^{-1}$.
2) Transfer the data from the Bode diagram to a Nichols chart.
3) Read from the Nichols chart the data for plotting a Bode phase curve for $[KG(s)]^{-1}/\{1+[KG(s)]^{-1}\} = H(s)$ and plot that curve.
4) Search for a Z(s) of the required form such that graphical addition of the Bode phase curve for this function to the Bode phase curve plotted in step 3 results in a phase curve that is excluded from the range $-3\pi/2$, $-\pi/2$ of phase values.

These steps can be short cut by shading the region of the Nichols chart where

$$\frac{-3\pi}{2} \leq \arg H(s) \leq \frac{-\pi}{2}$$

and requiring that the locus obtained by graphical addition in the curvilinear coordinates of $[KG(j\omega)]^{-1}$ and $Z(j\omega)$ remain outside of the shaded area.

In the analytical approach one forms the polynomial $P_1(\omega)$ for the numerator of

$$\mathrm{Re}\{Z(j\omega)[G(j\omega) + \frac{1}{K}]\}$$

where the denominator is the sum of two squares and then replaces ω with $-j\omega$, forming $P_2(\omega)$, keeping the free coefficients, c_i, of $Z(s)$ in literal form. Routh arrays are then systematically generated for sets of the c_i within the allowed coefficient space. The search terminates successfully when a Routh array is found having the proper number of sign changes in the left hand column. If the allowable coefficient space is sampled with a fine grid and exhausted without generating a successful Routh array, then it is concluded with fair certainty that stability cannot be established with the given criterion.

Unfortunately, the coefficient space of the c_i is generally unbounded, so that a truly exhaustive sampling is impossible. Practical terminations of the search along one coefficient direction would be when the coefficient becomes either dominant or insignificant over the other coefficients, both fixed and free, in each term of $P_2(\omega)$ where it appears. Specifying a suitable fineness for the sampling grid is also a problem. Fortunately, the Routh array is easily programmed and requires little machine time per array.

In the following example both approaches to applying criteria with $Z(s)$ multipliers are demonstrated.

Example #12:

$$G(s) = \frac{5\ s^2}{(s+1)(s+2)(s+3)}.$$

This is the same G(s) considered in Example #3. By the Popov criterion it is found that, with a constant single-valued nonlinearity, the system is absolutely stable in the sector [0,8]. If the nonlinearity is monotonic with slope bounded by K, a Z(s) multiplier of a form given by Brockett and Willems [26] can be used to establish a larger sector of stability, [0,K]. One of the simplest forms of Z(s) permitted is

$$Z(s) = \frac{1+As}{B+Cs}$$

where A, B, and C are real and non-negative. The requirement is that

$$Z(s)\ [G(s) + \frac{1}{K}]$$

be positive real, or equivalently that

$$\mathrm{Re}\{Z(j\omega)[G(j\omega) + \frac{1}{K}]\} \geq 0 \qquad \text{for all } \omega \geq 0.$$

Applying the graphical method of Murphy [42], the $[KG(j\omega)]^{-1}$ locus is plotted on the Nichols chart of Figure 23 where K has been taken to be 100. In order to shift

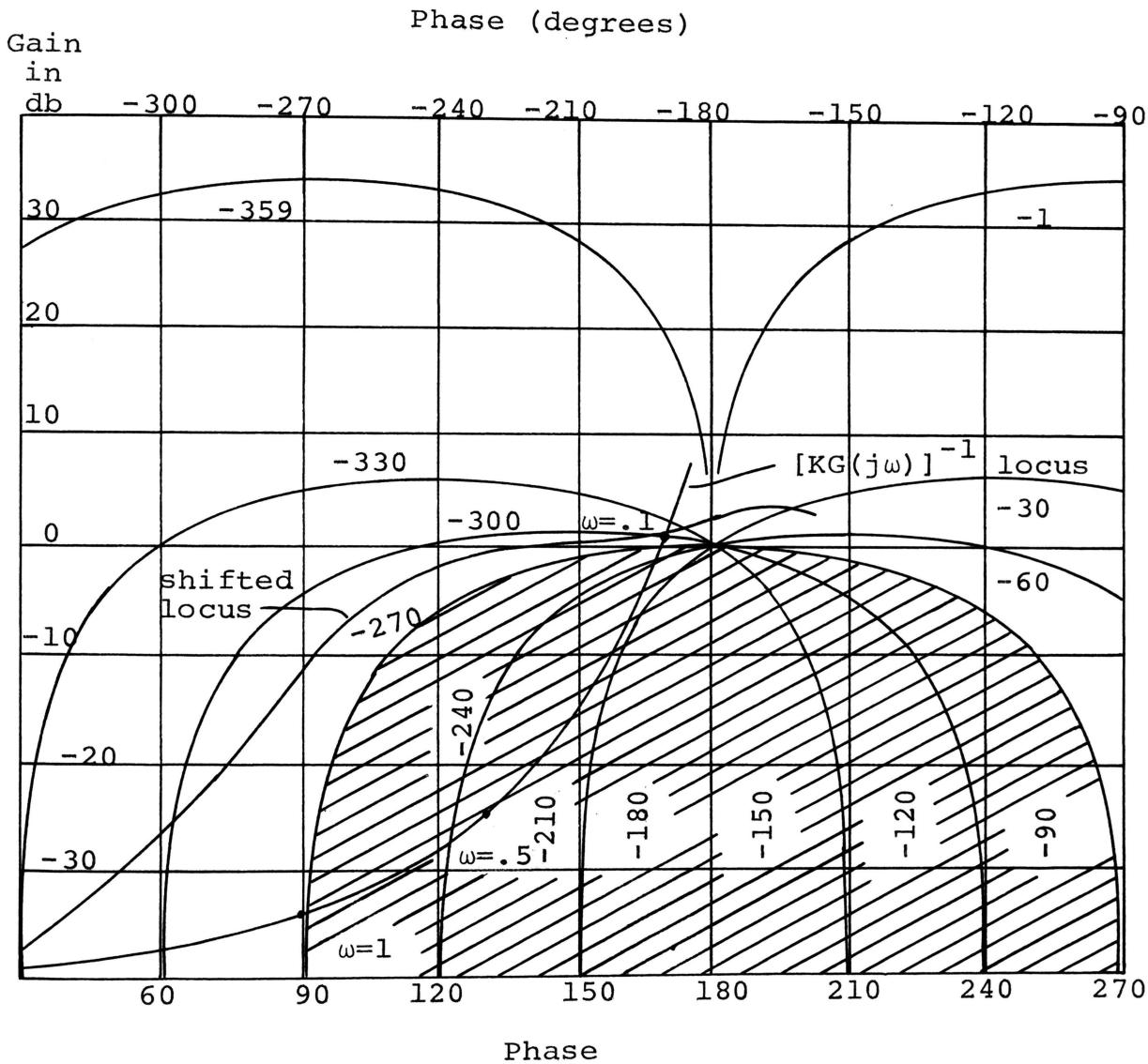

Figure 23. Nichols Chart for Example #12

the locus out of the shaded forbidden region, Z(s) must have a maximum phase lag of about 60° at $\omega = .14$, and a phase lag of 30° at $\omega = .62$. Therefore the pole of Z(s) is chosen to be well below $\omega = .14$, and the zero is chosen above $\omega = .62$. At the same time the zero must not be at such a high frequency that the lower left end of the locus (not shown) is shifted into a forbidden region. (Note that the pattern of curvilinear coordinates is periodic to the left and right, with cyclical forbidden regions.) To meet these requirements let

$$Z(s) = \frac{1+s}{.01+s} .$$

Since only the phase of Z(s) is relevant, its magnitude is ignored, i.e., taken to be identically one. The addition of the phase of Z(s) in the curvilinear coordinates yields the locus completely outside the forbidden region.

This choice for Z(s) is also verified by substituting $A = 1$, $B = .01$, $C = 1$, and $K = 100$ into $P_1(\omega)$ and generating the appropriate Routh array.

$$P_1(\omega) = 100\omega^8+225{,}507\omega^6+252{,}414\omega^4+649\omega^2+36.$$

The Routh array for $P_2(\omega) = P_1(-j\omega)$ is

100	-255,507	252,414	-649	36
800	-1,533,042	1,009,656	-1,298	
-63,877.5	126,207.5	-486.75	36	
-1,531,449.3	1,009,649.9	-1,297.5491		
-84,094.197	432.62809	36		
1,001,771.2	-1,953.1491			
416.23227	36			
-88,596.508				
36				

The four sign changes verify that the system is absolutely stable in the sector [0,100].

Alternatively a systematic trial-and-error search could have been made in the ABC-space to find values such that the corresponding Routh array has the four required sign changes. The FORTRAN program listed below determined that A = .1778, B = .01, and C = .1778 yields a Routh array with four sign changes. These values correspond to a pole at .0562 and a zero at 5.62. Note that the level of nesting of the DO loops equals the number of arbitrary parameters, making the handling of more complicated forms of Z(s) quite time consuming. The total search time increases as D^2P^n, where D is the degree of the polynomial $P_1(\omega)$, P is the number of sample points for each parameter, and n is the number of parameters. In this example A, B, and C ranged from .01 to 10, with four points per decade.

Listing

```
      DIMENSION P(9,5)
      READ(1,10)AS,AF,BS,BF,CS,CF
10    FORMAT(6F10.4)
      DO 20 I=1,9
      DO 20 J=1,5
20    P(I,J)=0.
      DO 100 I=1,13
      A=AS*EXP(ALOG(AF/AS)*(I-1)/12.)
      DO 100 J=1,13
      B=BS*EXP(ALOG(BF/BS)*(J-1)/12.)
      DO 100 K=1,13
      C=CS*EXP(ALOG(CF/CS)*(K-1)/12.)
      P(1,1)=100.*A*C
      P(1,2)=-100.*C*(-5.*100.-6.-11.*A)-A*(-6.*B*100.-11.*100.*C)
     1-(-5.*A*100.-6.-6.*A-1.)*(-6.*C*100.-100.*B)
      P(1,3)=6.*B*100.*A+5.*100.*C+(-5.*100.-6.-11.*A)*(-6.*B*100.
     1-11.*100.*C)+(-5.*A*100.-6.*A-1.)*(6.*C*100.+11.*100.*B)
     1+(-6.*C*100.-100.*B)*(6.*A+11.)
      P(1,4)=-6.*(-6.*B*100.-11.*100.*C)-6.*B*100.*(-5.*100.-6.-11.*A)
     1-(6.*A+11.)*(6.*C*100.+11.*100.*B)
      P(1,5)=36.*B*100.
      P(2,1)=8.*P(1,1)
      P(2,2)=6.*P(1,2)
      P(2,3)=4.*P(1,3)
      P(2,4)=2.*P(1,4)
      KOUNT=0
      DO 60 L=3,9
      MEND=5-L/2
      DO 50 M=1,MEND
```

```
 50  P(L,M)=(P(L-1,1)*P(L-2,M+1)-P(L-2,1)*P(L-1,M+1))/P(L-1,1)
     IF(P(L,1)*P(L-1,1) .GT. 0.)GO TO 60
     KOUNT=KOUNT+1
 60  CONTINUE
     IF(KOUNT .EQ. 4)GO TO 110
100  CONTINUE
110  WRITE(3,120)A,B,C
     WRITE(3,120)(P(1,I),I=1,5)
     WRITE(3,120)(P(3,I),I=1,4)
     WRITE(3,120)(P(4,I),I=1,3)
     WRITE(3,120)(P(5,I),I=1,3)
     WRITE(3,120)(P(6,I),I=1,2)
     WRITE(3,120)(P(7,I),I=1,2)
     WRITE(3,120)P(8,1)
     WRITE(3,120)P(9,1)
120  FORMAT(//5E16.4)
     STOP
     END
```

(End of Example #12.)

The preceding example points the way to engineering applications of criteria involving general Z(s) multipliers. If in a practical problem the standard Popov criterion does not yield a Popov sector corresponding to the Hurwitz sector, chances are good that a less conservative sector can be obtained by use of the appropriate Z(s) multiplier. The authors mentioned in Chapter II ([26]-[31]) have given forms of Z(s) suitable for nonlinearities which are slope-restricted, odd, power law, with restricted asymmetry, etc. The present research, being primarilly directed toward criteria with graphical interpretations in the complex planes, leaves further investigation along the lines of Example #12 to future research.

VIII. CONCLUSION

The original Popov criterion, enhanced by several theoretical extensions and system transformations, can be applied to a large class of feedback systems. Several of these criteria have straightforward graphical interpretations, and are the basis of an interactive computer program for stable system design. The frequency domain criteria not only provide sufficient conditions for absolute stability, but also yield information regarding degree of stability and transient response, BIBO stability, process stability, and absolute instability. The degree of conservatism of the Popov criterion is explored for various types of systems by means of examples with comparisons to simulation results.

The most important result of this research is the development of a versatile interactive computer program making it possible for the control engineer to use the frequency domain criteria with a great deal of convenience, speed and flexibility. Other original results of this research are the use of the G** plot, zero shifting so that the Popov criterion can be applied to some otherwise inadmissible nonlinear characteristics, a new verification of the Kalman conjecture, BIBO stability for composite systems, and the use of the Routh array with criteria having general Z(s) multipliers.

Beyond the results of this dissertation, further research seems worthwhile on several fronts. The mathematically inclined researcher might extend the present results to sampled data systems or pursue other verifications of the Aizerman and Kalman conjectures utilizing locus curvature. The criteria involving the general Z(s) multipliers, only touched on here, might be further reduced to engineering practice and adapted to interactive system design. With the computational tools developed here, the experimentally inclined worker can easily analyze and/or design a wide variety of nonlinear feedback systems, and compare to simulation results or actual system performance.

The researcher with a computer science orientation would surely find many improvements begging to be implemented in the interactive program listed in Appendix A. The most obvious are a complete recoding in assembly language to avoid the time consuming overlays of the present programs, and the utilization of a graphics unit to display Nyquist-type loci and Popov lines.

BIBLIOGRAPHY

[1] Robert N. Clark, Introduction to Automatic Control Systems. New York: John Wiley and Sons, Inc., 1962.

[2] Stanley M. Shinners, Modern Control System Theory and Application. Reading, Massachusetts: Addison-Wesley, 1971.

[3] Richard Bellman and Robert Kalaba, eds., Mathematical Trends in Control Theory. New York: Dover Publications, Inc., 1964.

[4] John Peschon, ed., Disciplines and Techniques of Systems Control. New York: Blaisdell Publishing Co., 1965, pp. 3-4.

[5] Richard C. Dorf, Modern Control Systems. Reading, Massachusetts: Addison-Wesley, 1966, pp. 1-16.

[6] Joseph LaSalle and Soloman Lefschetz, Stability by Liapunov's Direct Method With Applications. New York: Academic Press, 1961, pp. vii-viii.

[7] O. Mayr, The Origins of Feedback Control. Cambridge, Massachusetts: MIT Press, 1970, reviewed by D. D. Pidhayny in IEEE Transactions on Automatic Control, Vol. AC-17, April 1972, pp. 283-84.

[8] Otto Mayr, Feedback Mechanisms in the Historical Collections of the National Museum of History and Technology. Washington, D.C.: Smithsonian Institution Press, 1971.

[9] M. A. Aizerman and F. R. Gantmacher, Absolute Stability of Regulator Systems, trans. by E. Polak. San Francisco: Holden Day, Inc., 1964.

[10] Jay C. Hsu and Andrew U. Meyer, Modern Control Principles and Applications. New York: McGraw-Hill, 1968.

[11] V. M. Popov, "Criterii de stabilitate pentru sistemele neliniare de reglare automata, bazate pe utilizarea transformatei Laplace," Studii si Cercetari de Energetica, Acad. R.P.R. IX, 1, 1959.

[12] V. M. Popov, "Absolute stability of nonlinear systems of automatic control," Automation and Remote Control, Vol. 22, 1961, pp. 857-875.

[13] C. A. Desoer, "A generalization of the Popov criterion," IEEE Transactions on Automatic Control, Vol. AC-10, April 1965, pp. 182-85.

[14] I. W. Sandberg, "Some stability results related to those of V. M. Popov," Bell System Tech. J., Vol. 44, 1965, pp. 2133-48.

[15] J. L. Willems, "Stability Theory of Dynamical Systems. London: Nelson, 1970.

[16] V. A. Yakubovitch, "Solution of certain matrix inequalities occuring in the theory of automatic controls," Dokl. Akad. Nauk, USSR, Vol. 143, 1962, pp. 1304-07.

[17] R. E. Kalman, "Liapunov functions for the problem of Lur'e in automatic controls," Proc. of the National Acad. of Science (U.S.A.), Vol. 49, No. 3, 1963, pp. 201-05.

[18] R. W. Brockett, "On the stability of nonlinear feedback systems," IEEE Trans. on Applications and Industry, Vol. 83, November 1964, pp. 443-49.

[19] R. W. Brockett, "The status of stability theory for deterministic systems," IEEE Trans. on Automatic Control, Vol. AC-11, July 1966, pp. 596-606.

[20] J. J. Bongiorno, Jr., "Real-frequency stability criteria for linear time-varying systems," Proc. of the IEEE, Vol. 52, No. 7, 1964, pp. 832-41. (Correction in Vol. 52, No. 10, 1964, pp. 1127-28.)

[21] I. W. Sandberg, "A frequency-domain condition for the stability of feedback systems containing a single time-varying nonlinear element," Bell System Tech. J., Vol. 43, No. 4, 1964, pp. 1601-08.

[22] W. T. Higgins, Jr., and D. G. Schultz, "Stability of certain nonlinear, time-varying systems," Engineering Experiment Station Report, U. of Arizona, Tucson, 1966.

[23] Lynn E. Weaver, Reactor Dynamics and Control. New York: American Elsevier, 1968.

[24] B. D. O. Anderson, "Stability of control systems with multiple nonlinearities," J. Franklin Inst., Vol. 282, 1962, pp. 155-60.

[25] Jacob Rootenberg and Julius Bola Oso, "On cross coupling and stability in nonlinear control systems," IEEE Trans. on Automatic Control, Vol. AC-16, February 1971, pp. 73-75.

[26] R. W. Brockett and J. L. Willems, "Frequency domain stability criteria--Parts I and II," IEEE Trans. on Automatic Control, Vol. AC-10, July 1965, pp. 255-61; Vol. AC-10, October 1965, pp. 407-413.

[27] G. Zames, "On the input-output stability of time-varying nonlinear feedback systems--Part I: conditions derived using concepts of loop gain, conicity, and positivity," IEEE Trans. on Automatic Control, Vol. AC-11, April 1966, pp. 228-39; Part II: "Conditions involving circles in the frequency plane and sector nonlinearities," IEEE Trans. on Automatic Control, Vol. AC-11, July 1966, pp. 465-76.

[28] R. P. O'Shea, "A combined frequency-time domain stability criterion for autonomous continuous systems," IEEE Trans. on Automatic Control, Vol. AC-11, July 1966, pp. 477-84.

[29] M. A. Lakshmi Thathachar, Mandyam D. Srinath, and H. K. Ramapriyan, "On a modified Lur'e problem," IEEE Trans. on Automatic Control, Vol. AC-12, December 1967, pp. 731-40.

[30] R. P. O'Shea, "An improved frequency time domain stability criterion for autonomous continuous systems," IEEE Trans. on Automatic Control, Vol. AC-12, December 1967, pp. 725-30.

[31] Yedatore V. Venkatesh, "Noncausal multipliers for nonlinear system stability," IEEE Trans. on Automatic Control, Vol. AC-15, April 1970, pp. 195-204.

[32] I. W. Sandberg, "On the boundedness of solutions of nonlinear integral equations," Bell System Tech. J., Vol. 44, No. 3, 1965, pp. 439-453.

[33] I. W. Sandberg, "A stability criterion for linear networks containing time-varying capacitors," IEEE Trans. on Circuit Theory, Vol. CT-12, 1965, pp. 2-11.

[34] Malur K. Sundareshan and M. A. L. Thathachar, "L_2-stability of linear time varying systems--

conditions involving noncausal multipliers," IEEE Trans. on Automatic Control, Vol. AC-17, August 1972, pp. 504-10.

[35] A. G. Dewey, "On the stability of feedback systems with one differentiable nonlinear element," IEEE Trans. on Automatic Control, Vol. AC-11, July 1966, pp. 485-91.

[36] Y. Cho and K. S. Narendra, "An off-axis stability criterion for the stability of feedback systems with a monotonic nonlinearity," IEEE Trans. on Automatic Control, Vol. AC-13, August 1968, pp. 413-416.

[37] D. R. Fannin, L. F. Judd, and R. H. Seacat, "The use of sensitivity analysis to insure system stability," Proceedings of the First Asilomar Conf. on Circuits and Systems, 1967, pp. 583-94.

[38] R. H. Seacat, L. F. Judd, and D. R. Fannin, "A method of specifying parameter changes to insure absolute stability of nonlinear systems," Proceedings of the Eleventh Midwest Symposium on Circuit Theory, 1968, pp. 273-80.

[39] Robert E. Passmore, K. S. Chao, and Darrell L. Vines, "Non-linear systems design using the circle criterion," 1970 SWIEEECO Record, pp. 11-14.

[40] Allen J. Rushing and D. Ronald Fannin, "Synthesis of stable nonlinear feedback systems," Proceedings of the Fifteenth Midwest Symposium on Circuit Theory, 1972, pp. IX.4.1-IX.4.10.

[41] B. N. Naumov and Ya. Z. Tsypkin, "A frequency criterion for absolute process stability in nonlinear automatic control systems," Automation and Remote Control, Vol. 25, June 1964, pp. 765-78.

[42] G. J. Murphy, "A method for the design of stable nonlinear feedback systems," Proceedings of the National Electronics Conf., 1967, pp. 108-13.

[43] G. J. Murphy, "A frequency domain stability chart for nonlinear feedback systems," IEEE Trans. on Automatic Control, Vol. AC-12, December 1967, pp. 740-43.

[44] C. E. Zimmerman and G. J. Thaler, "Application of the Popov criterion to design of nonlinear systems," IEEE Trans. on Automatic Control, AC-16, February 1971, pp. 76-79.

[45] John E. Gibson, Nonlinear Automatic Control, Appendix D, "Decomposition of multivalued instantaneous nonlinearities," p. 563. New York: McGraw-Hill, 1963.

[46] W. Baron and K. Meyer, "Effect of delayed neutrons on reactor stability," Nuc. Sci. and Engineering, Vol. 24, 1966, pp. 356-61.

[47] Solomon Lefschetz, Stability of Nonlinear Control Systems, Appendix B (Kenneth Meyer), "An example from the theory of nuclear power reactors,"pp. 142-43. New York: Academic Press, 1965.

[48] Jacques L. Willems and Jan C. Willems, "The application of Liapunov methods to the computation of transient stability regions for multimachine power systems," IEEE Trans. on Power Apparatus and Systems, Vol. PAS-89, No. 5, May-June 1970, pp. 795-801.

[49] S. Weissenberger, "Application of results from the absolute stability problem to the computation of finite stability domains," IEEE Trans. on Automatic Control, Vol. AC-13, February 1968, pp. 124-25.

[50] D. D. Siljak, "Absolute stability in the parameter space," Proc. of the First Asilomar Conference on Circuits and Systems, Pacific Grove, California, Nov. 1-3, 1967, pp. 624-31.

[51] D. D. Siljak, Nonlinear Systems: The Parameter Analysis and Design. New York: John Wiley & Sons, 1969, pp. 362-67.

[52] G. E. F. Sherwood and Angus E. Taylor, Calculus. Englewood Cliffs, New Jersey: Prentice-Hall, 1954, p. 212.

[53] A. R. Bergen and I. J. Williams, "Verification of Aizerman's conjecture for a class of third order systems," IRE Trans. on Automatic Control, Vol. AC-7, April 1962, pp. 42-46.

[54] P. L. Falb and G. Zames, "Multipliers with real poles and zeros: an application of a theorem on stability conditions," IEEE Trans. on Automatic Control, Vol. AC-13, February 1968, pp. 125-26.

[55] H. Shirakawa, "Stability of a certain class of third-order nonlinear differential equations," IEEE Trans. on Automatic Control, Vol. AC-13, April 1968, pp. 202-3.

[56] Katsuhiko Fujii and Kazuhiko Shoji, "Verification of the Aizerman and/or Kalman conjecture," IEEE Trans. on Automatic Control, Vol. AC-17, June 1972, pp. 406-08.

[57] A. G. Dewey and E. I. Jury, "A note on Aizerman's conjecture," IEEE Trans. on Automatic Control, Vol. AC-10, October 1965, pp. 482-83.

[58] R. E. Fitts, "Two counterexamples to Aizerman's conjecture," IEEE Trans. on Automatic Control, Vol. AC-11, July 1966, pp. 553-56.

[59] J. C. Willems, "Perturbation theory for the analysis of instability in nonlinear feedback systems," 1966 Allerton Conference on Circuit and System Theory, cited by Hsu and Meyer [10], p. 172.

[60] M. S. Ghausi, Principles and Design of Linear Active Circuits. New York: McGraw-Hill, 1965, pp. 438-42.

[61] S. D. Conte, Elementary Numerical Analysis. New York: McGraw-Hill, 1965.

[62] A. G. Dewey and S. I. Jury, "A stability inequality for a class of nonlinear feedback systems," IEEE Trans. on Automatic Control, Vol. AC-11, January 1966, pp. 54-62.

[63] Katsuhiko Ogata, State Space Analysis of Control Systems. Englewood Cliffs, New Jersey: Prentice-Hall, 1967, Chapter 7.

[64] R. W. Brockett and H. B. Lee, "Frequency domain instability criteria for time varying and nonlinear systems," Proceedings of the IEEE, Vol. 55, No. 5, May 1967, pp. 604-19.

[65] Jacob Rootenberg and Ralph Walk, "Frequency criteria for the absence of limit cycles in nonlinear systems," IEEE Trans. on Automatic Control, Vol. AC-18, February 1973, pp. 64-65.

[66] Charles A. Desoer and Ernest L. Kuh, Basic Circuit Theory. New York: McGraw-Hill, 1969, pp. 822-25.

VITA

Allen Joseph Rushing was born in Charlottesville, Virginia on October 23, 1944. He graduated from Kirkwood High School, Kirkwood, Missouri, in 1962 and then enrolled at the University of Denver, Denver, Colorado, where he obtained a B.S. degree (cum laude) in Electrical Engineering in 1966. He worked as an electrical engineer at the Monsanto Company, St. Louis, Missouri, from 1967 through 1970. Concurrent with employment he studied electrical engineering at the St. Louis Graduate Engineering Center of the University of Missouri - Rolla, obtaining his M.S. degree in 1970. From 1970 through the present, he pursued the Ph.D. degree in Electrical Engineering on the Rolla campus, while working as a half-time graduate teaching assistant.

APPENDIX A

Interactive Program for Nonlinear System Design

1. Scope

This program utilizes the Popov criterion and two of its extensions for analysis and design of stable nonlinear systems of the form of Figure 1. The extensions are the off-axis circle criterion [36] and the Dewey criterion [35], both applicable to systems with constant single-valued monotonic nonlinearities. The linear part is input either in factored form

$$G(s) = \frac{K(s^2+A_1s+B_1)(s^2+A_2s+B_2) \; . \; . \; . \; (s+Z_1) \; . \; . \; . \; (s+Z_i)}{(s^2+C_1s+D_1)(s^2+C_2s+D_2) \; . \; . \; . \; (s+PL_1) . \; . \; . \; (s+PL_j)}$$

$$\cdot \; e^{-Ts} \; e^{-TDSTR\sqrt{s}} \qquad \text{(A.1)}$$

or in unfactored form

$$G(s) = \frac{P_1+P_2s+P_3s^2 + \; . \; . \; . \; + P_ms^{m-1}}{Q_1+Q_2s+ \; . \; . \; . \; Q_ns^{n-1}} \; e^{-Ts} \; d^{-TDSTR\sqrt{s}}. \qquad \text{(A.2)}$$

The user specifies the degree of stability, $\alpha(s= -\alpha+j\omega)$, and the amount of linear negative feedback, A, around G(s). This last option permits pole shifting so that the criteria can be applied to a wider class of systems. Magnitude and phase data of G(s) is printed for the user's choice of the

G, G*, or G** locus. Areas between the locus and the Popov line are printed for the allowable range of angle of the Popov line (at 10° increments).

At this point the user has the options of jumping back to various points in the stages just completed so that he can change his input, or of jumping into an automatic parameter adjustment routine. In the automatic routine the user specifies which parameters are adjustable, their weights (relative adjustment costs of the normalized parameters), and constraints, as well as the approximate number of adjustments to be made in reducing the area to zero. After each adjustment the new parameter value and area are printed, and the user has the opportunity to jump out of the automatic routine.

2. System Configuration

The program is written in FORTRAN for use with the Data General Corporation NOVA 800 computer with 16K words of core storage and the DOS disc operating system. An ASR-33 teletype is used for I/O.

3. Program Organization

The program consists of eight (8) modules which are overlaid one on the other as required during execution. The module hierarchy is indicated in Figure A-1. The modules are stored on disc and called, i.e., overlaid, by the names beginning AJR__. The alternative names in parentheses in Figure A-1 are somewhat descriptive of module function and are used in the flowchart. The basic module functions are summarized as follows.

MAST coordinates the other modules and accepts some user input specifications

MULT multiplies all numerator factors together, and all denominator factors together, yielding the linear part in the form of (A.2).

PREP makes the substitution of $-\alpha+j\omega$, for s, yielding the linear part in the form

$$G(s)=\frac{F_1+F_2\omega^2+\ldots+j[G_1\omega+G_2\omega^3+\ldots]}{U_1+U_2\omega^2+\ldots+j[V_1\omega+V_2\omega^3+\ldots]}\,e^{-Ts}\,e^{-TDSTR\sqrt{s}}. \qquad (A.3)$$

NYQPRT prints Nyquist type data according to user specifications.

AREAP calculates the areas between a locus and various Popov lines, according to user specifications.

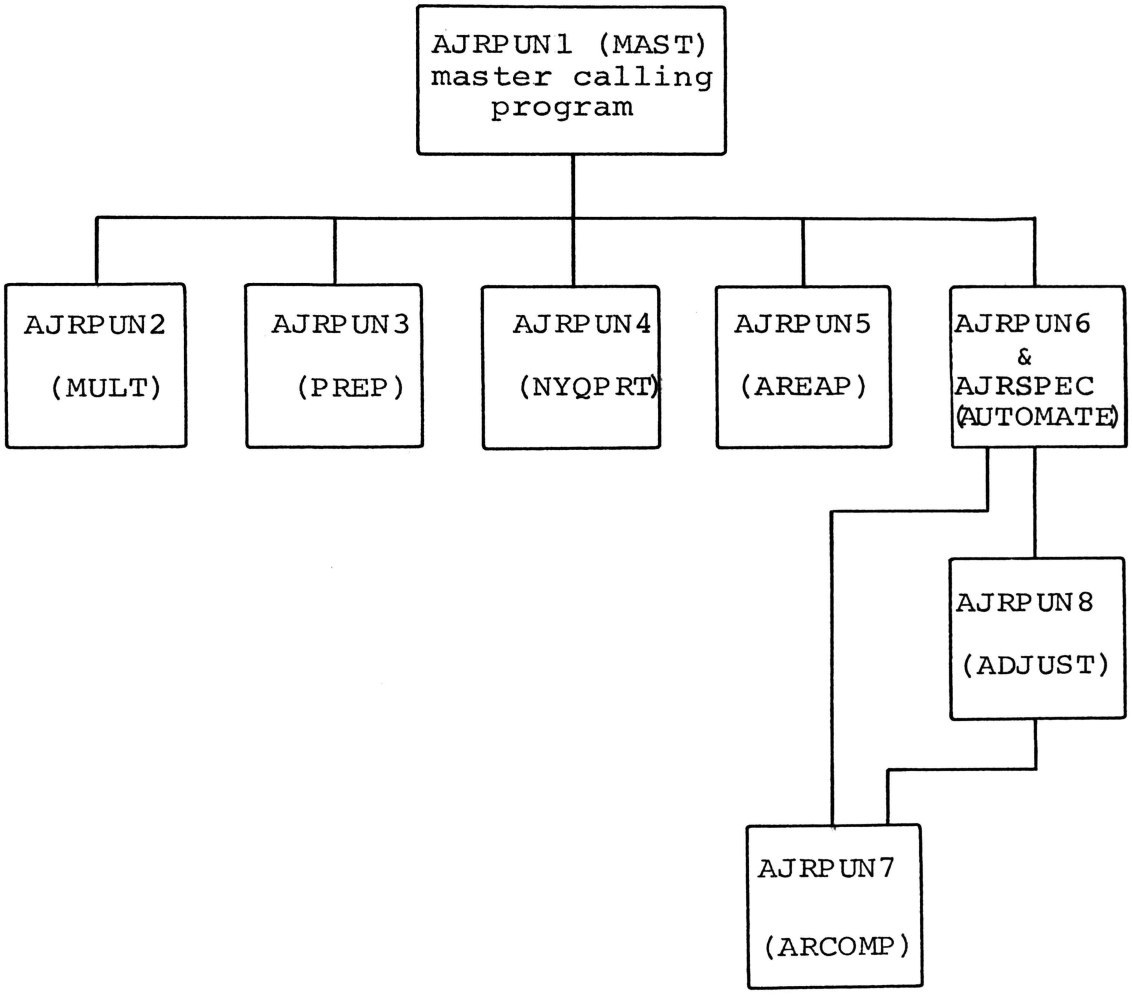

Figure A-1. Module Hierarchy

AUTOMATE coordinates the automatic parameter adjustment, handling user input, parameter perturbation, and selection of parameter to be adjusted.

ARCOMP calculates the areas between a locus and various Popov lines, similar to the function of AREAP.

ADJUST calculates the parameter adjustments.

Data is transferred from one module to another by means of WRITE BINARY and READ BINARY instructions coming just before and just after the overlays. For simplicity these transfers are omitted from the flow chart.

The initial programming was done for IBM 360/50 CPS operation, an approach which had to be abandoned because of excessive terminal time and storage requirements. Subsequent programming for the NOVA also included approaches which had to be abandoned or modified. The resultant programming inefficiencies and vestigial variables and coding have not all been removed.

4. Partial List of Variables

P(I), Q(I), K,T,TDSTR--as defined in equation (A.2).

F(I),G(I), U(I), V(I)--as defined in equation (A.3).

A(I), B(I), Z(I), C(I), D(I), PL(I)--as defined in (A.1).

NQF--number of numerator quadratic factors in G(s), maximum of 10.

NSF--number of numerator simple factors in G(s), maximum of 10.

DQF--number of denominator quadratic factors in G(s), maximum of 10.

DSF--number of denominator simple factors in G(s), maximum of 10.

ALPHA--degree of stability (-1 times real part of s).

AA(typed A)--linear negative feedback around G(s).

SML--smallest value of area function for all admissible Popov lines.

CODE--1, 2, or 3 for G, G*, or G**, respectively.

W--ω (radian frequency).

WS--starting frequency.

WF--finishing frequency.

NPTS--number of points in locus, maximum of 201.

KP--upper bound on sector.

IQ(typed QSGN)--1, 2, 3, or 4 for $q = 0$, $q \leq 0$, $q \geq 0$, $q \lesseqgtr 0$, respectively.

IND--return index, may be an integer 1 through 8. See Figure A-2.

TA, TB, TC--used in the calculation of the binomial coefficients, e.g., $\binom{k}{m} = \frac{k!}{m!(k-m)!} = \frac{TA}{TBxTC}$.

DW--starting frequency in NYQPRT.

N--number of decades in NYQPRT.

GC--value of G(s) (complex) in NYQPRT.

GC(I)--value of G(s) at a particular frequency in AREAP, ARCOMP.

PHI--angle of Popov line, in degrees.

FF--point on Popov line.

FPRV--previous point on Popov line.

THETA--angle of Popov line (in degrees).

IPAR(J)--1 if parameter is adjustable 0 if not; where J is the parameter number.

JPAR(J)--code indicating type of parameter, e.g., Z.

KPAR(J)--subscript of parameter, e.g., Z(2).

NSTEP (or ANSTP)--approximate number of parameter adjustments to be used in reducing area to zero.

KMAX--maximum on NSTEP; NSTEP<KMAX.

PWT(J)--relative cost of adjusting normalized parameter.

PMIN(J)--minimum constraint on parameter.

PMAX(J)--maximum constraint on parameter.

M--number of parameter to be adjusted.

AORG--original area.

AO--area after last adjustment.

5. User's Instructions

The main power switch, the CPU, the disc pack, and the teletype should all be turned on and the machines allowed a minute or two to warm up. Assuming that DOS and the interactive program modules are stored on the disc, invoke DOS by first checking that locations 376_8 and 377_8 contain 60133_8 and 377_8 respectively. Then with the switches set to 376_8, press reset and start. The teletype should respond "DOS REV 05". Press continue and the teletype

responds "R". Type "AJRPUN1" followed by a carriage return to begin execution of the interactive program.

In response to program questions requiring a yes or no answer, the user types 1 for yes and 0 for no. When inputting data, the decimal point is optional.

The following sample of input and output illustrates the use of the program. The characters typed by the user have been underlined.

```
DOS REV 05.
R
AJRPUN1
FACTORED?1
NQF=?0
NSF=?0
DQF=?0
DSF=?3
K=?5
T=?.02
TDSTR=?.02
PL(I)=?3
PL(I)=?4
PL(I)=?5
THE PS ARE:
              5.0000
THE QS ARE:
             59.9999
             46.9999
             11.9999
              0.9999
ALPHA=?0
THE FS ARE:
              5.0000
THE GS ARE:
THE US ARE:
             59.9999
            -11.9999
THE VS ARE:
             46.9999
             -0.9999
A=?0
CODE=?2
DW=?.1
N=?3
```

W	MAG(G*)	ARG(G*)
0.0999	0.8257E -1	-0.4869
0.1999	0.8135E -1	-1.9289
0.2999	0.7962E -1	-4.3477
0.3999	0.7755E -1	-7.7762
0.4999	0.7543E -1	-12.2337
0.5999	0.7355E -1	-17.6931
0.6999	0.7224E -1	-24.0426
0.7999	0.7179E -1	-31.0587
0.8999	0.7241E -1	-38.4145
0.9999	0.7099E -1	-48.2313
1.9999	0.1126E 0	-87.7439
2.9999	0.1063E 0	-99.9164
3.9999	0.6807E -1	-108.3500
4.9999	0.3215E -1	-123.0570
5.9999	0.1288E -1	-172.8340
6.9999	0.1571E -1	124.6370
7.9999	0.2117E -1	106.9240
8.9999	0.2367E -1	100.3590
9.9999	0.2409E -1	97.0511
19.9999	0.1094E -1	90.3690
29.9999	0.4807E -2	89.4509
39.9999	0.2337E -2	89.0401
49.9999	0.1168E -2	88.6679
59.9999	0.5501E -3	88.0780
69.9998	0.2004E -3	86.4072
79.9998	0.9459E -5	-25.0163
89.9998	0.1228E -3	-87.2850
99.9998	0.1886E -3	-88.8164

```
CODE=?2
QSGN=?4
WS=?.5
WF=?50
NPTS=?201
KP=?100
AREA( 1)=  0.2155E -3
AREA( 2)=  0.1897E -3
AREA( 3)=  0.1767E -3
AREA( 4)=  0.1609E -3
AREA( 5)=  0.1493E -3
AREA( 6)=  0.1271E -3
AREA( 7)=  0.9796E -4
AREA( 8)=  0.1694E -3
AREA( 9)=  0.1020E -2
AREA(10)=  0.2162E -2
AREA(11)=  0.3122E -2
AREA(12)=  0.3899E -2
AREA(13)=  0.4564E -2
AREA(14)=  0.5162E -2
AREA(15)=  0.5737E -2
AREA(16)=  0.6296E -2
INSUF. R. OF W.
PHI=169.9
AREA(MIN)=  0.9796E -4   THETA= 69.9
IND=?8
PL(I) ADJ.?1
WT.=?100
MIN.=?2
MAX.=?4
PL(I) ADJ.?1
WT.=?10
MIN.=?3
MAX.=?6
PL(I) ADJ.?1
WT.=?1
MIN.=?3
MAX.=?8
K ADJ.?0
T ADJ.?0
TDSTR ADJ.?0
NSTEP=?4
KMAX=?8
INSUF. R. OF W, PHI=169.9
INSUF. R. OF W, PHI=169.9
INSUF. R. OF W, PHI=169.9
PL( 3)=  0.5037E  1
INSUF. R. OF W, PHI=169.9
AREA( 1)= 0.9196E -4
INTERVENE?0
INSUF. R. OF W, PHI=169.9
INSUF. R. OF W, PHI=169.9
PL( 2)=  0.4255E  1
INSUF. R. OF W, PHI=169.9
AREA( 2)= 0.6550E -4
INTERVENE?0
INSUF. R. OF W, PHI=169.9
INSUF. R. OF W, PHI=169.9
PL( 2)=  0.4546E  1
INSUF. R. OF W, PHI=169.9
AREA( 3)= 0.4155E -4
INTERVENE?0
INSUF. R. OF W, PHI=169.9
INSUF. R. OF W, PHI=169.9
PL( 2)=  0.4735E  1
INSUF. R. OF W, PHI=169.9
AREA( 4)= 0.1867E -4
INTERVENE?0
PL( 2)=  0.4966E  1
AREA( 5)= 0.1308E -5
INTERVENE?0
PERTURBATION GIVES ZERO AREA; J= 2
IND=?1
FACTORED?1
NQF=?2
```

6. Flow Chart

Notes referenced in flow chart Figures A-2 through A-9:

(1) The F's (and the U's in a similar manner) are calculated from

$$F_i = \sum_{j=1}^{m} (-1)^{i+j} P_{2i-2+j} \binom{2i-3+j}{2i-2} \alpha^{j-1}; \quad m = DEGN+3-2i$$

using

$$\binom{K}{L} = \frac{K!}{L!(K-L)!} = \frac{TA}{TBxTC}$$

which arises from consideration of the binomial expansion for $(-\alpha+j\omega)^j$

$$Re(-\alpha+j\omega)^j = (-1)^j [\binom{j}{0}\alpha^j - \binom{j}{2}\alpha^{j-2}\omega^2 + \binom{j}{4}\alpha^{j-4}\omega^4 + \ldots \binom{j}{j}\omega^j], \quad j \text{ even}$$

$$\text{or} \quad \ldots + \binom{j}{j-1}\alpha\omega^{j-1}] \quad j \text{ odd.}$$

(2) The G's (and the V's in a similar manner) are calculated from

$$G_i = \sum_{j=1}^{m} (-1)^{i+j} P_{2i-1+j} \binom{2i-2+j}{2i-1} \alpha^{j-1}; \quad m = DEGN+2-2i.$$

(3) GC is obtained by first calculating the rational part of G(s), then multiplying by $\exp(-Ts-TDSTR\sqrt{s})$.

This result is modified by GC=GC/(1+A x GC) to take into account linear feedback, A.

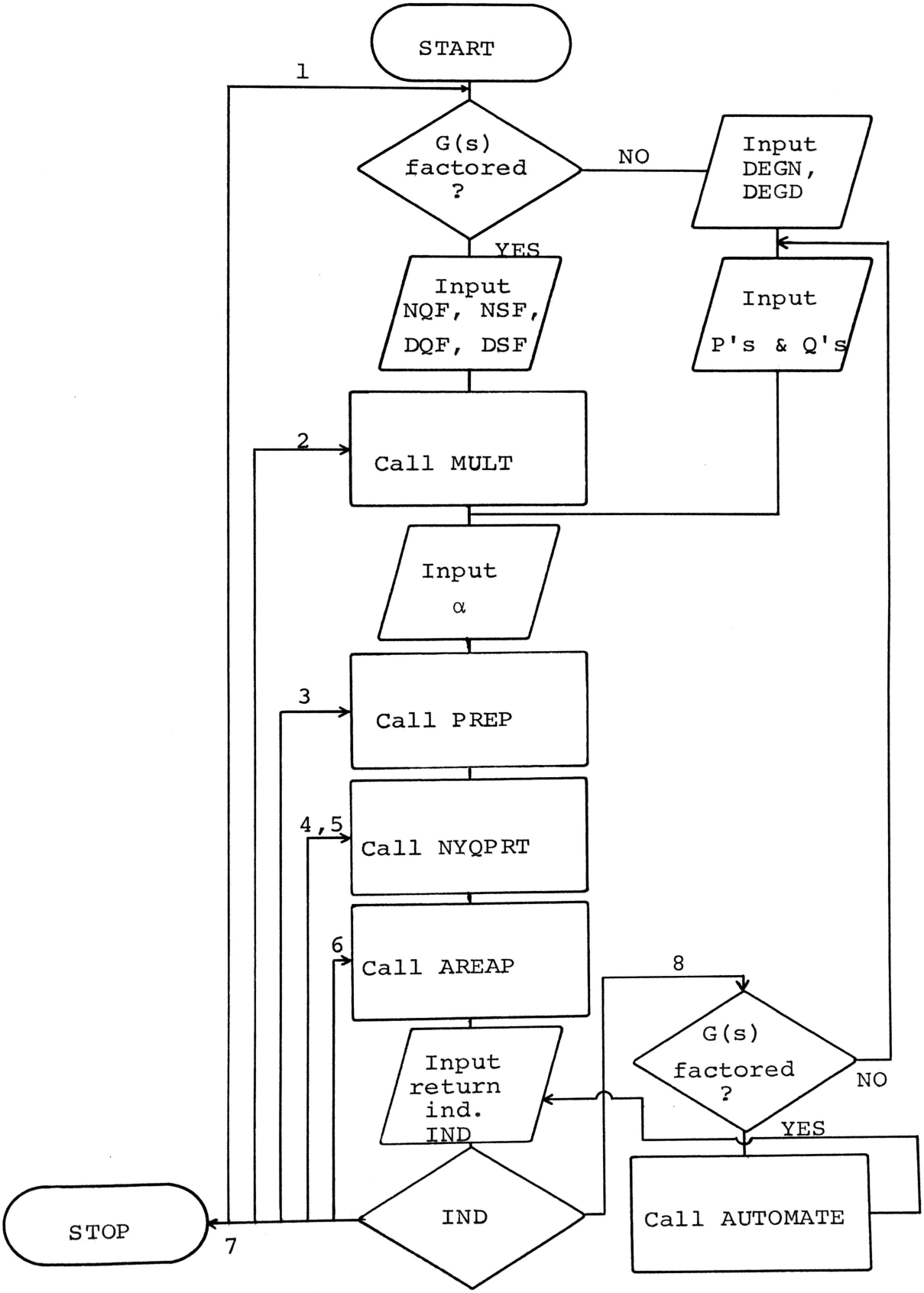

Figure A-2. MAST

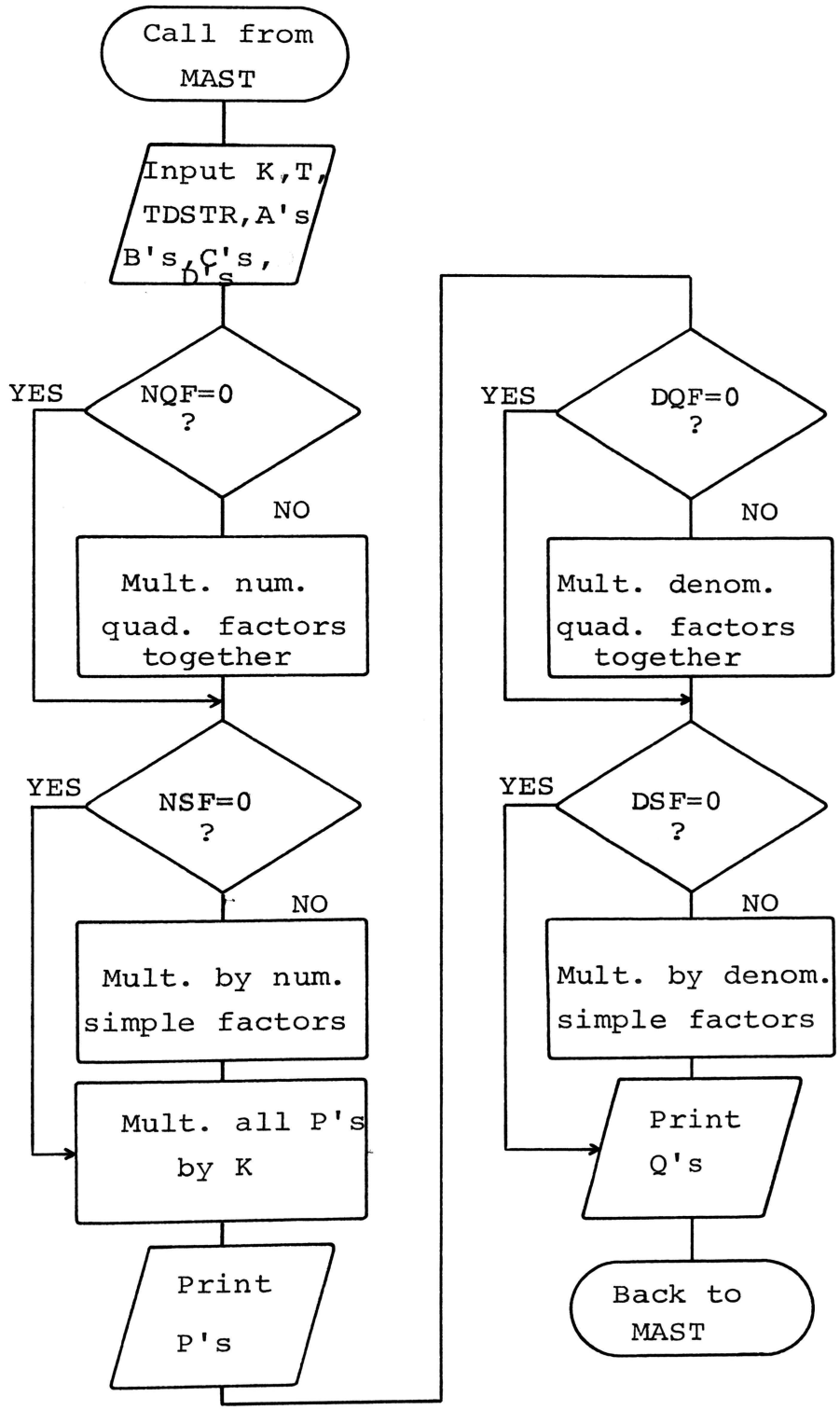

Figure A-3. MULT

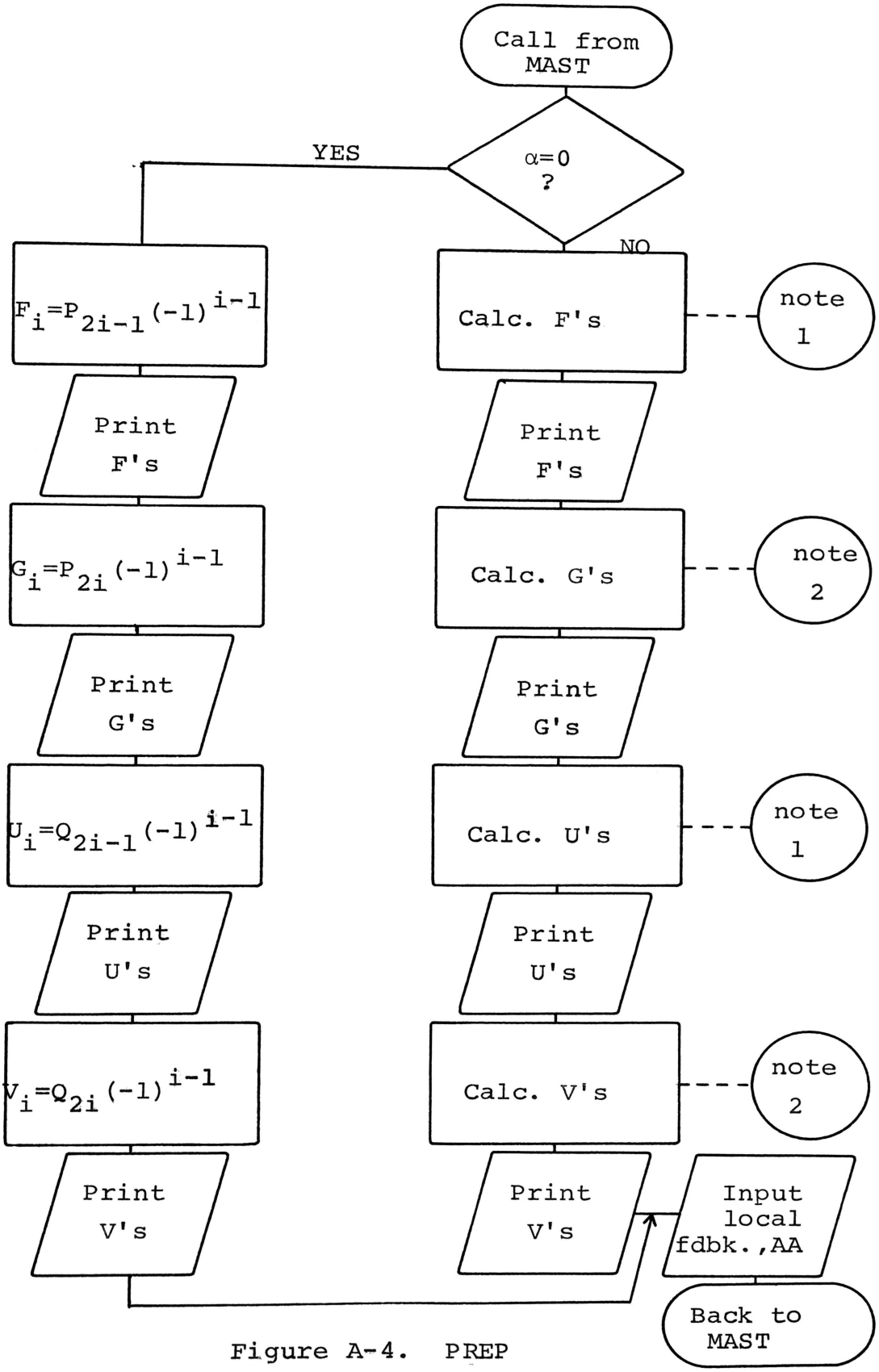

Figure A-4. PREP

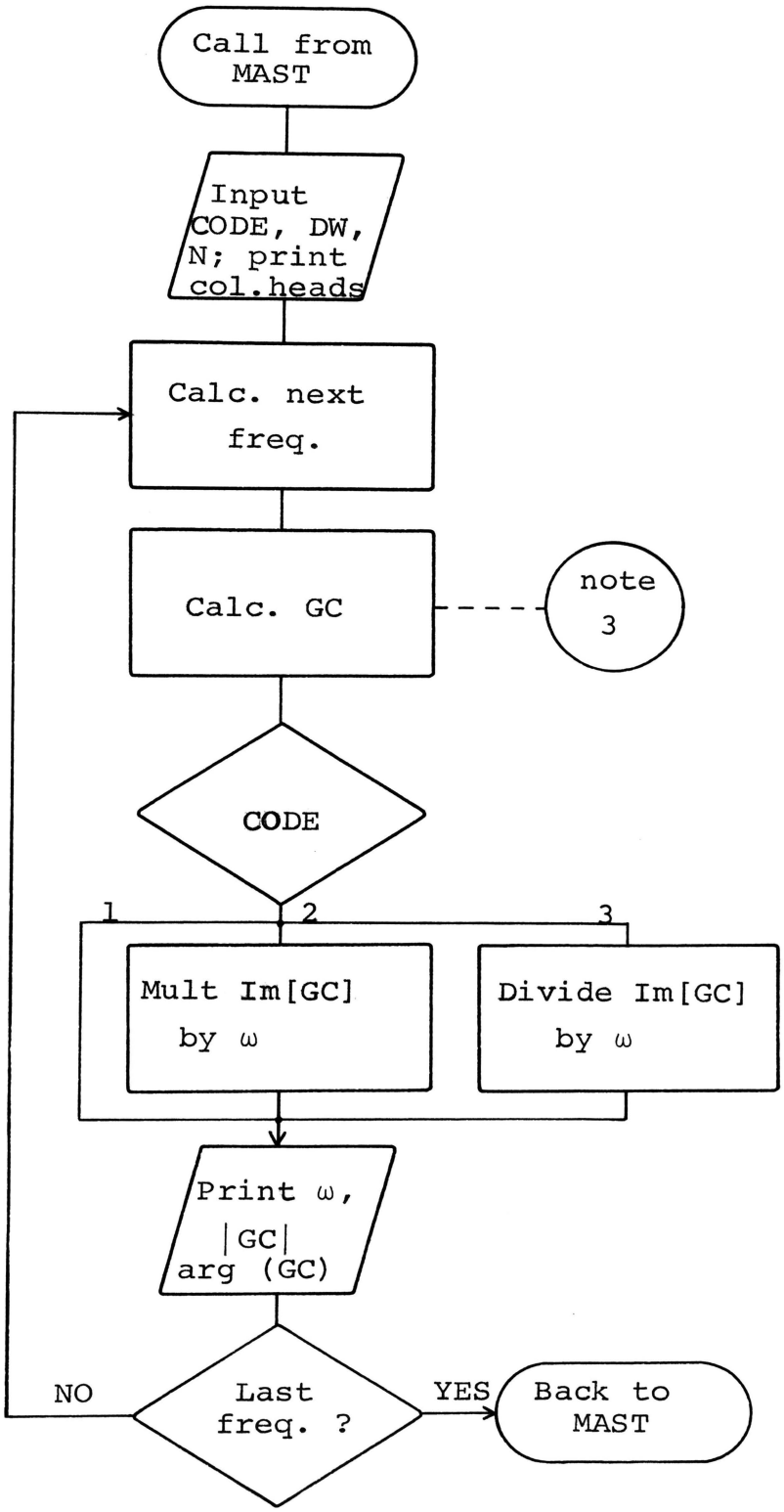

Figure A-5. NYQPRT

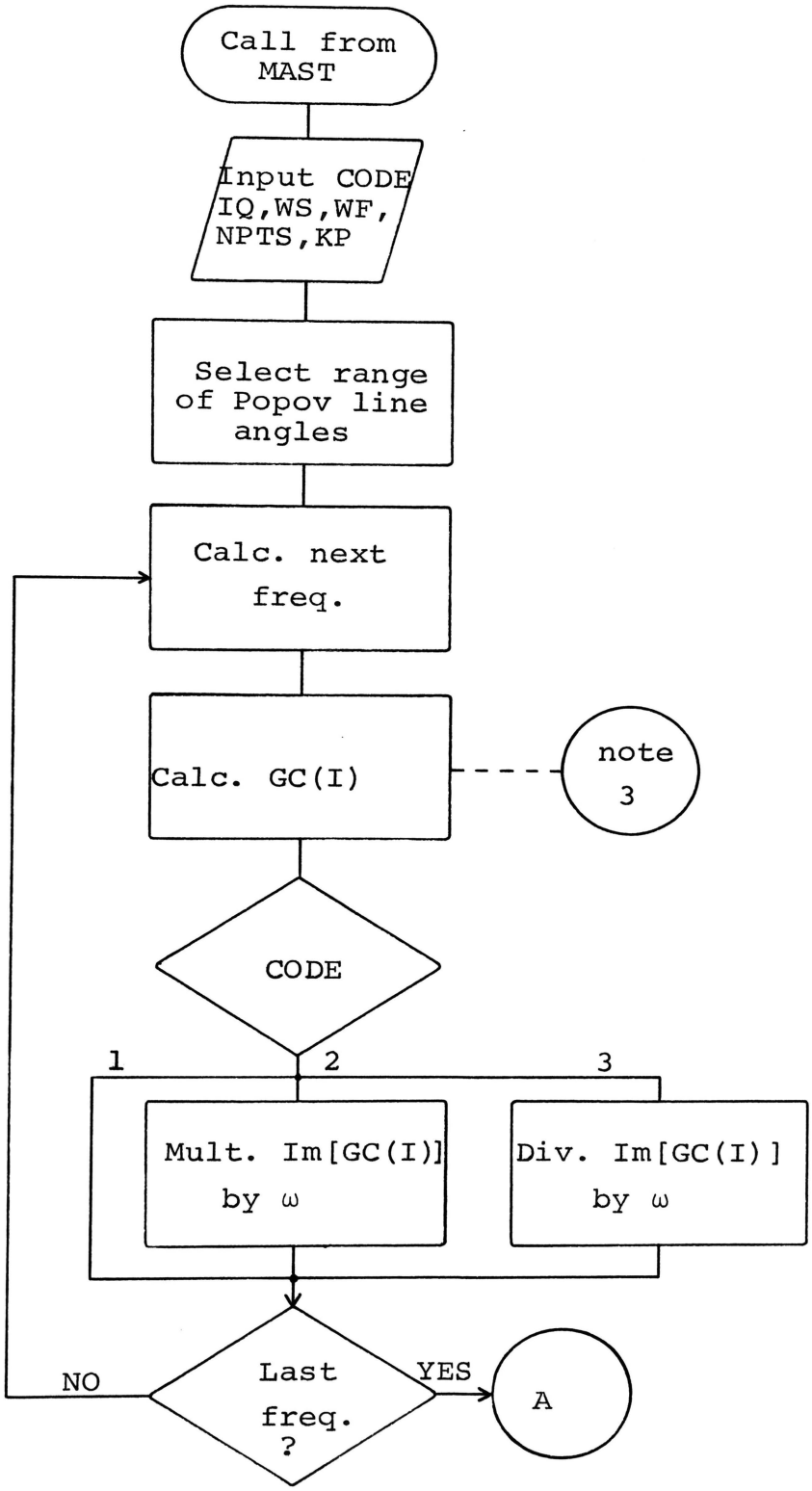

Figure A-6. AREAP

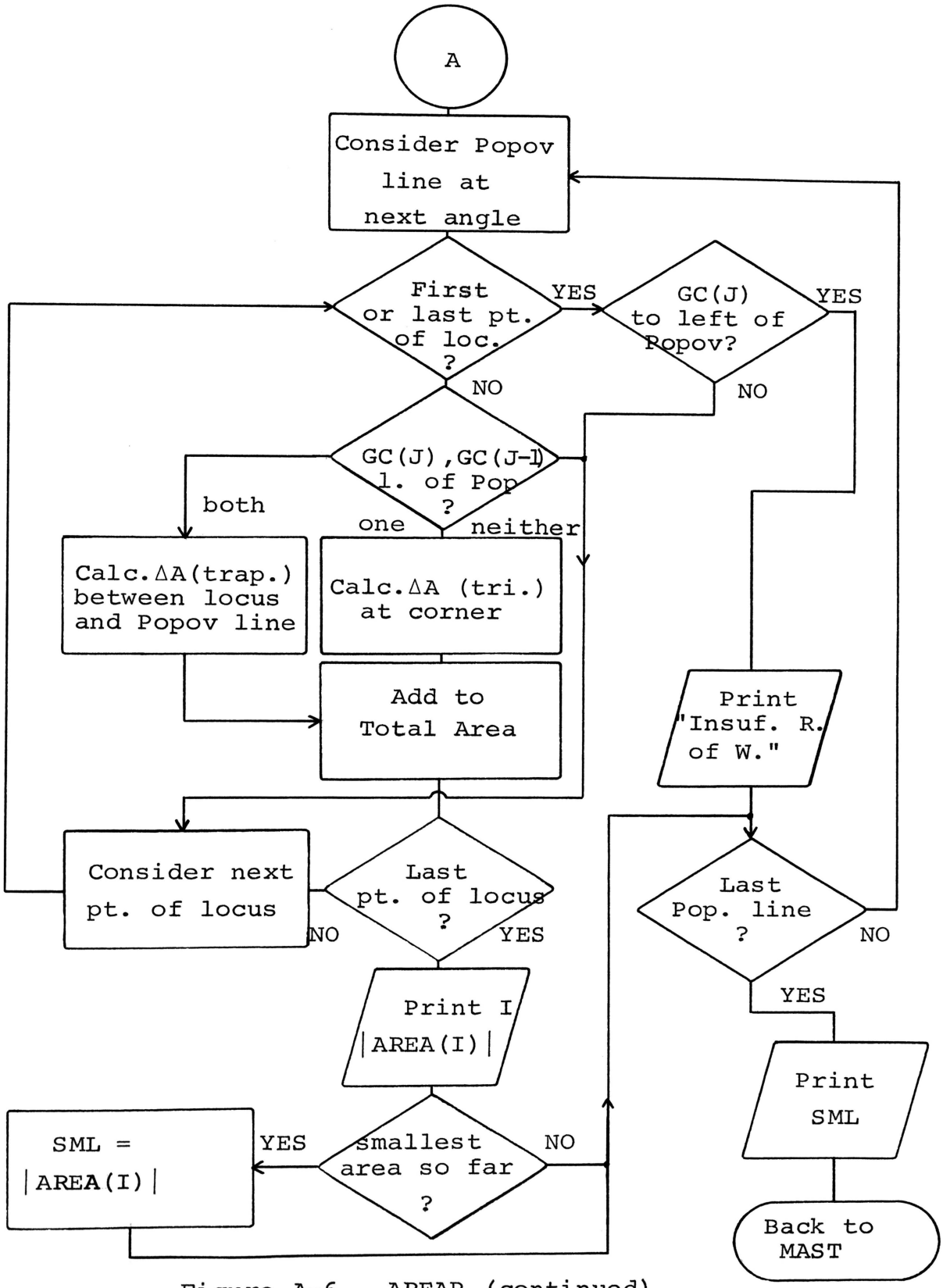

Figure A-6. AREAP (continued)

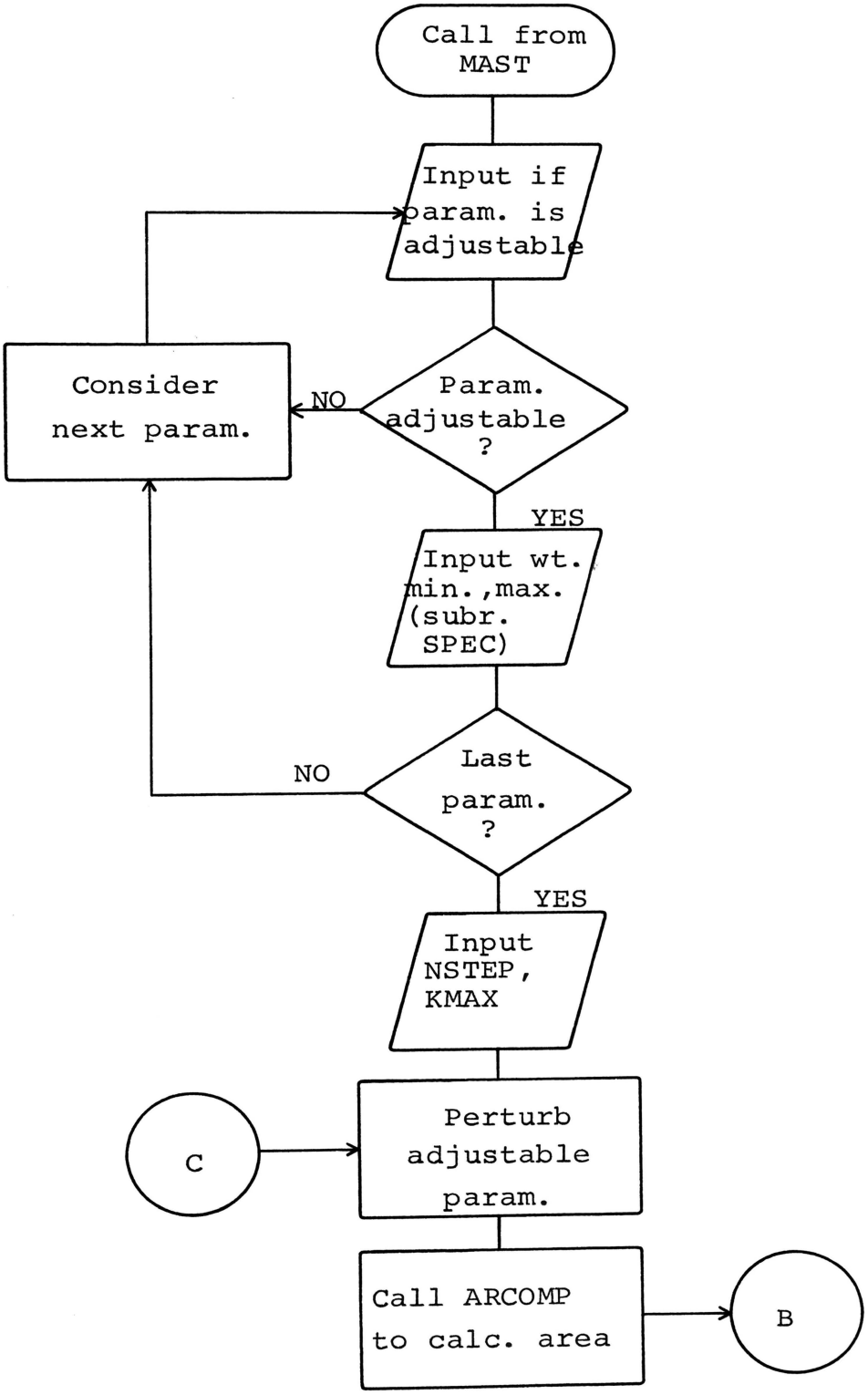

Figure A-7. AUTOMATE

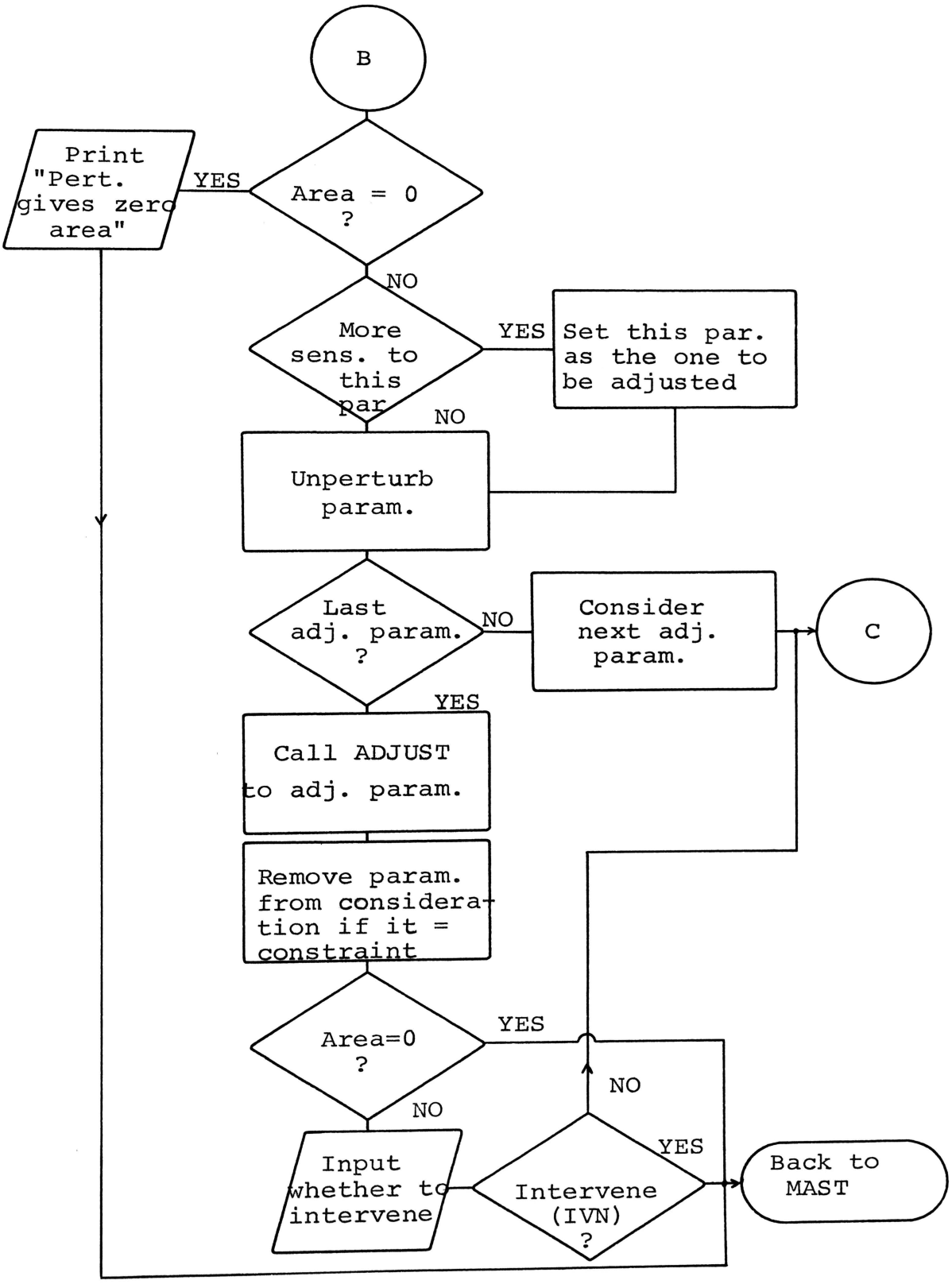

Figure A-7. AUTOMATE (continued)

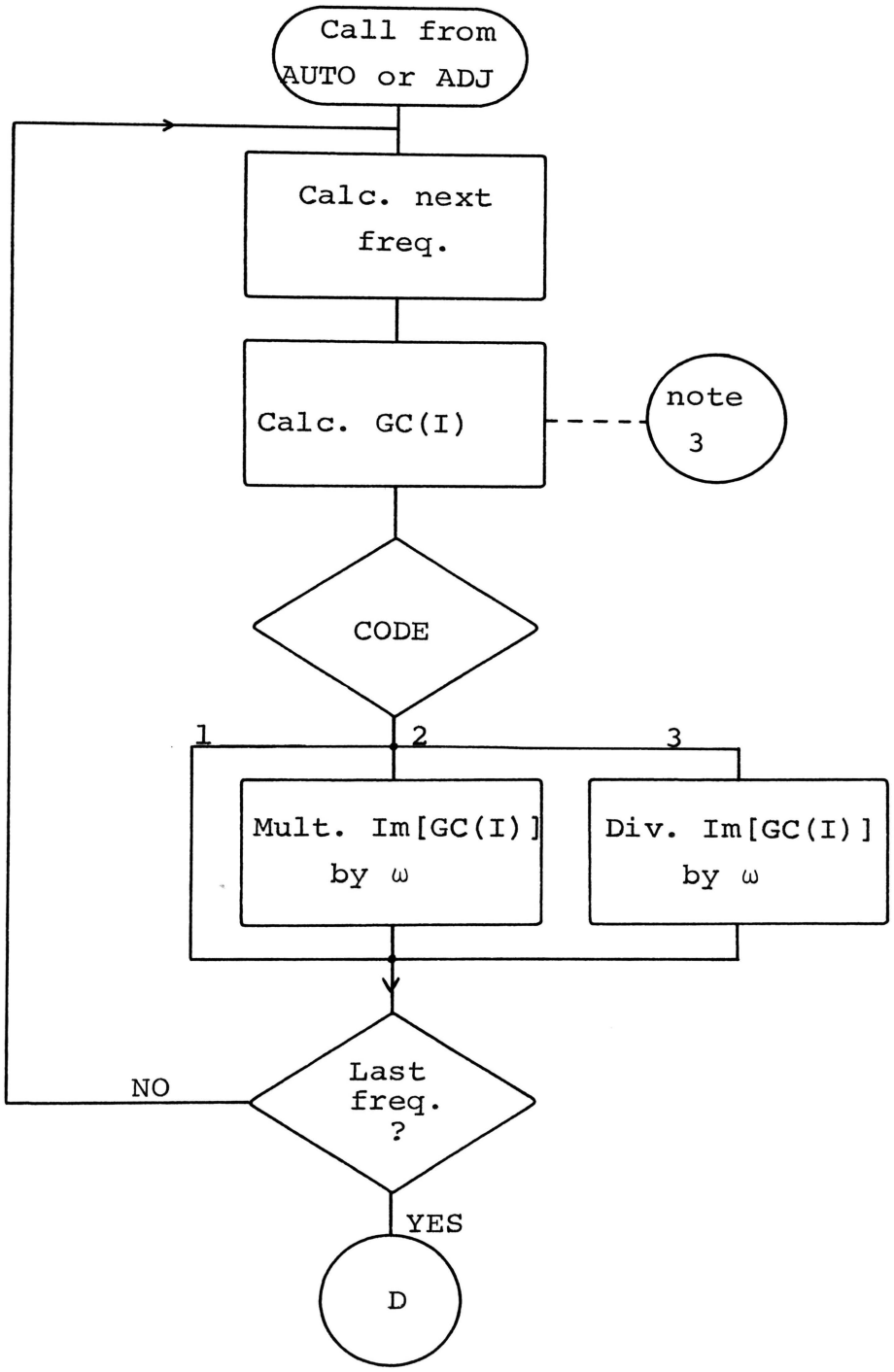

Figure A-8. ARCOMP

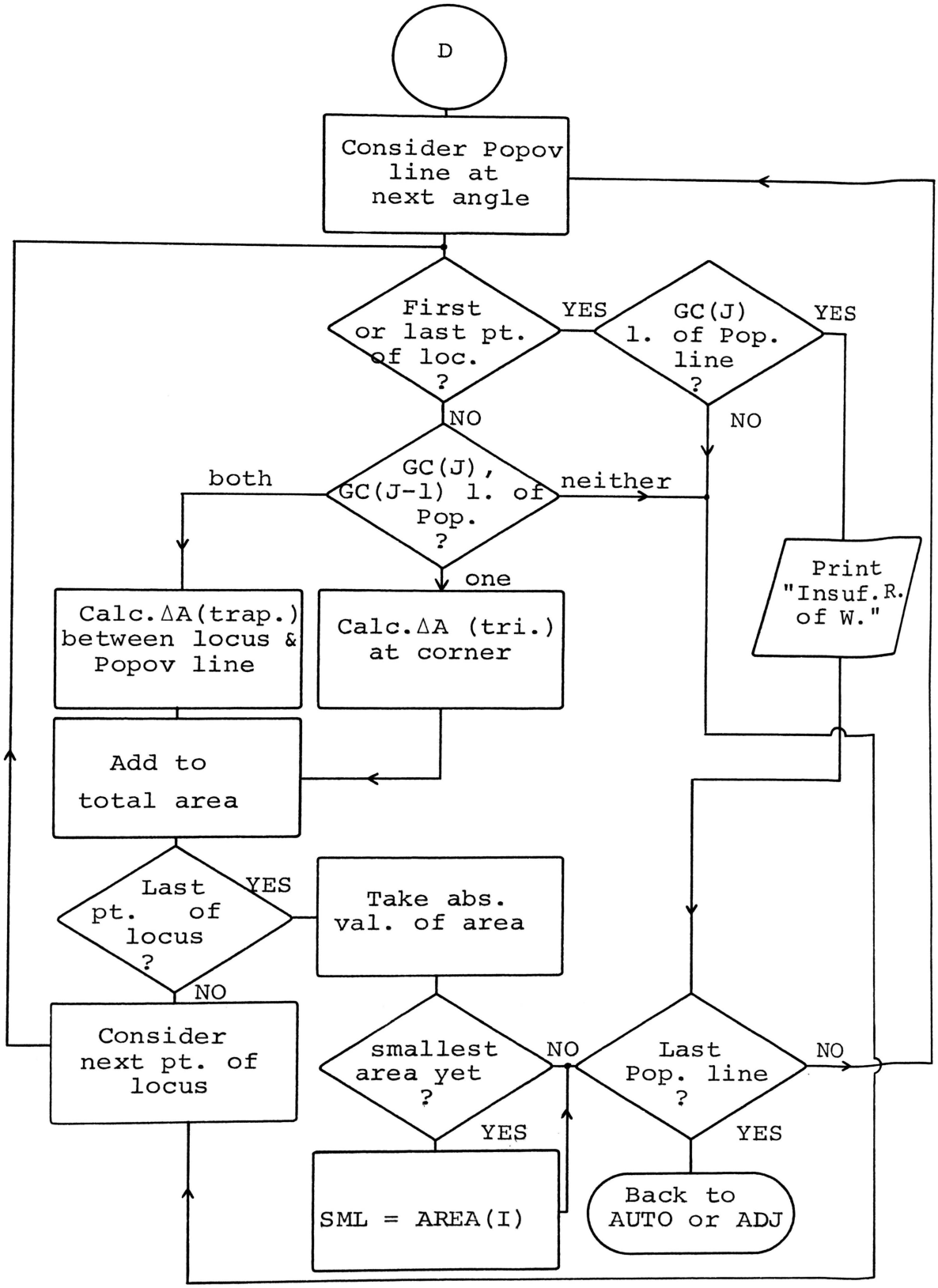

Figure A-8. ARCOMP (continued)

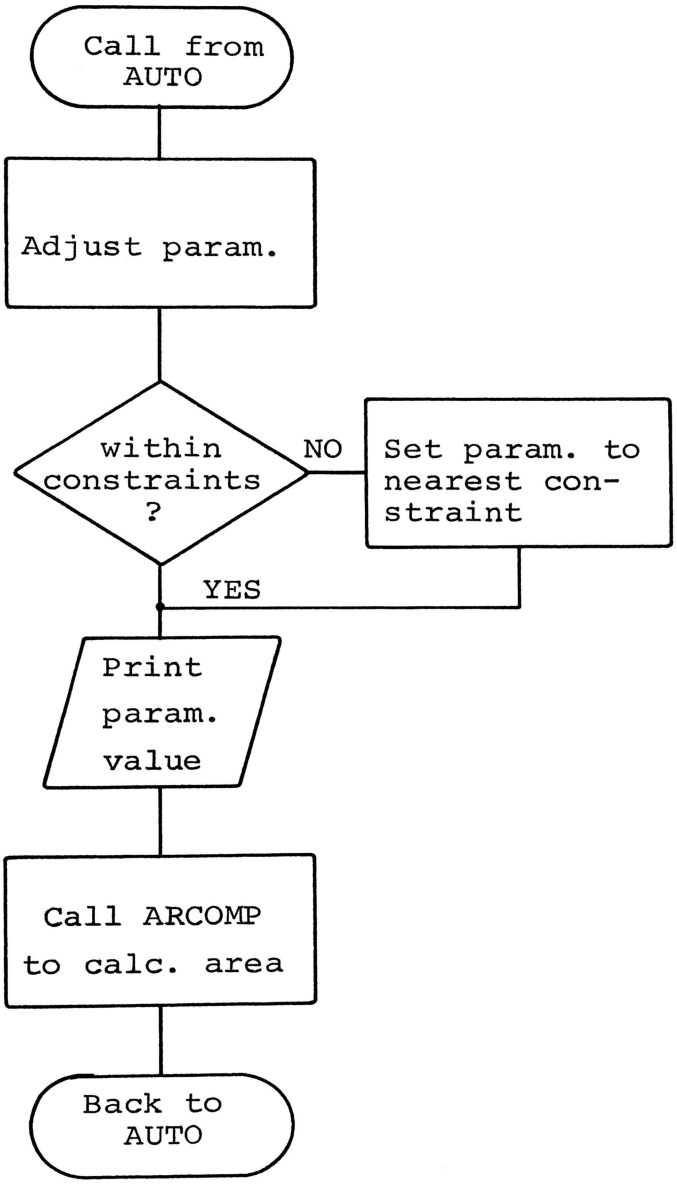

Figure A-9. ADJUST

7. Listing

```
C  MAST--MAIN CALLING PROGRAM
      REAL K,KP
      INTEGER DQF,DSF,FAC,DEGN1,DEGD1,DEGN12,DEGD12,DEGN,DEGD
     1,CODE
      DIMENSION P(31),Q(31),F(16),G(16),U(16),V(16)
     1,A(10),B(10),Z(10),C(10),D(10),PL(10)
10    ACCEPT "FACTORED?",FAC
      IF(FAC .NE. 1)GO TO 40
      ACCEPT "NQF=?",NQF,"NSF=?",NSF,"DQF=?",DQF,"DSF=?",DSF
      DEGN=2*NQF+NSF
      DEGN1=DEGN+1
      DEGD=2*DQF+DSF
      DEGD1=DEGD+1
      CALL DELETE('AJRCOM12')
      CALL FOPEN(4,'AJRCOM12')
      WRITE BINARY(4)NQF,NSF,DQF,DSF,DEGN1,DEGD1
      CALL FCLOS(4)
30    CALL OVLY('AJRPUN2.SV',0)
      CALL FOPEN(4,'AJRCOM21')
      READ BINARY(4)K,T,TDSTR,(P(I),I=1,31),(Q(I),I=1,31)
     1,(A(I),I=1,10),(B(I),I=1,10),(Z(I),I=1,10),
     1(C(I),I=1,10),(D(I),I=1,10),(PL(I),I=1,10)
      CALL FCLOS(4)
      GO TO 50
40    ACCEPT "DEGN=?",DEGN,"DEGD=?",DEGD
      DEGN1=DEGN+1
      DEGD1=DEGD+1
43    DO 41 I=1,DEGN1
41    ACCEPT "P(I)=?",P(I)
      DO 42 I=1,DEGD1
42    ACCEPT "Q(I)=?",Q(I)
50    DEGN12=(DEGN1+1)/2
      DEGD12=(DEGD1+1)/2
      ACCEPT "ALPHA=?",ALPHA
60    CALL DELETE('AJRCOM13')
      CALL FOPEN(4,'AJRCOM13')
      WRITE BINARY(4)DEGN,DEGN1,DEGD,DEGD1,
     1(P(I),I=1,31),(Q(I),I=1,31),ALPHA,T,TDSTR
      CALL FCLOS(4)
      CALL OVLY('AJRPUN3.SV',0)
      CALL FOPEN(4,'AJRCOM34')
      READ BINARY(4)(F(I),I=1,16),(G(I),I=1,16),(U(I),I=1,16),
     1(V(I),I=1,16),AA
      CALL FCLOS(4)
80    CALL OVLY('AJRPUN4.SV',0)
      CALL DELETE('AJRCOM15')
      CALL FOPEN(4,'AJRCOM15')
      WRITE BINARY(4)DEGN12,DEGD12,T,TDSTR,ALPHA,T,TDSTR
      CALL FCLOS(4)
90    CALL OVLY('AJRPUN5.SV',0)
      CALL FOPEN(4,'AJRCOM51')
      READ BINARY(4)SML,CODE,WS,WF,NPTS,KP,IQ,IQS,IQF
      CALL FCLOS(4)
110   ACCEPT "IND=?",IND
      GO TO(10,30,60,80,80,90,140,150),IND
150   IF(FAC .EQ. 1)GO TO 160
      TYPE "AUTO-ADJUST ALLOWED ONLY FOR FACTORED G(S)."
      GO TO 43
160   CALL DELETE('AJRCOM16')
      CALL FOPEN(4,'AJRCOM16')
      WRITE BINARY(4)K,T,TDSTR,(A(I),I=1,10),(B(I),I=1,10),
     1(Z(I),I=1,10),(C(I),I=1,10),(D(I),I=1,10),(PL(I),
     1I=1,10),ALPHA,AA,CODE,WS,WF,NPTS,KP,IQ,NQF,NSF,DQF,
     1DSF,IQS,IQF,SML
      CALL FCLOS(4)
      CALL OVLY('AJRPUN6.SV',0)
      GO TO 110
140   STOP
      END
```

```
C  MULT
      REAL K
      INTEGER DQF,DSF,DEGN1,DEGD1,DSF1,DEGN12,DEGD12
      DIMENSION PI(31),QI(31),A(10),B(10),C(10),D(10),Z(10),PL(10)
     1,P(31),Q(31)
      CALL FOPEN(4,'AJRCOM12')
      READ BINARY(4)NQF,NSF,DQF,DSF,DEGN1,DEGD1
      CALL FCLOS(4)
      ACCEPT "K=?",K,"T=?",T,"TDSTR=?",TDSTR
      IF(NQF)999,20,10
10    DO 11 I=1,NQF
11    ACCEPT "A(I)=?",A(I),"B(I)=?",B(I)
20    IF(NSF)999,30,21
21    DO 22 I=1,NSF
22    ACCEPT "Z(I)=?",Z(I)
30    IF(DQF)999,40,31
31    DO 32 I=1,DQF
32    ACCEPT "C(I)=?",C(I),"D(I)=?",D(I)
40    IF(DSF)999,100,41
41    DO 42 I=1,DSF
42    ACCEPT "PL(I)=?",PL(I)
100   IF(DEGN1 .EQ. 1)P(1)=1.
      IF(DEGN1 .NE. 2)GO TO 110
      P(2)=1.
110   IF(DEGD1 .NE. 2)GO TO 120
      Q(2)=1.
120   IF(NQF .EQ. 0)GO TO 170
      PI(1)=B(1)
      P(1)=B(1)
      PI(2)=A(1)
      P(2)=A(1)
      PI(3)=1.
      P(3)=1.
      DO 131 I=4,DEGN1
131   PI(I)=0.
      DO 152 J=2,NQF
      P(1)=PI(1)*B(J)
      P(2)=PI(2)*B(J)+PI(1)*A(J)
      L=2*J+1
      DO 151 I=3,L
151   P(I)=P(I)*B(J)+PI(I-1)*A(J)+PI(I-2)
      DO 152 I=1,L
152   PI(I)=P(I)
      IF(NQF .NE. 0)GO TO 190
170   IF(NSF .EQ. 0)GO TO 230
      PI(1)=Z(1)
      P(1)=Z(1)
      PI(2)=1.
      NSF1=NSF+1
      DO 181 I=3,NSF1
181   PI(I)=0.
190   IF(NSF .EQ. 0)GO TO 230
      NT=1
      IF(NQF .NE. 0)GO TO 192
      IF(NSF .EQ. 1)GO TO 230
      NT=2
192   DO 221 J=NT,NSF
      P(1)=PI(1)*Z(J)
      L=2*NQF+J+1
      DO 211 I=2,L
211   P(I)=PI(I)*Z(J)+PI(I-1)
```

```
      DO 221 I=1,L
221   PI(I)=P(I)
230   WRITE(10,235)
235   FORMAT(' THE P''S ARE:')
      DO 231 I=1,DEGN1
      P(I)=K*P(I)
231   WRITE(10,232)P(I)
232   FORMAT( F20.4)
      IF(DEGD1 .EQ. 1)Q(1)=1.
      IF(DQF .EQ. 0.)GO TO 290
      QI(1)=D(1)
      Q(1)=D(1)
      QI(2)=C(1)
      Q(2)=C(1)
      QI(3)=1.
      Q(3)=1.
      DO 251 I=4,DEGD1
251   QI(I)=0.
      DO 281 J=2,DQF
      Q(1)=QI(1)*D(J)
      Q(2)=QI(2)*D(J)+QI(1)*C(J)
      L=2*J+1
      DO 271 I=3,L
271   Q(I)=QI(I)*D(J)+QI(I-1)*C(J)+QI(I-2)
      DO 281 I=1,L
281   QI(I)=Q(I)
      IF(DQF .NE. 0)GO TO 310
290   IF(DSF .EQ. 0)GO TO 350
      QI(1)=PL(1)
      Q(1)=PL(1)
      QI(2)=1.
      DSF1=DSF+1
      DO 301 I=3,DSF1
301   QI(I)=0.
310   IF(DSF .EQ. 0)GO TO 350
      NT=1
      IF(DQF .NE. 0)GO TO 312
      IF(DSF .EQ. 1)GO TO 350
      NT=2
312   DO 341 J=NT,DSF
      Q(1)=QI(1)*PL(J)
      L=2*DQF+J+1
      DO 331 I=2,L
331   Q(I)=QI(I)*PL(J)+QI(I-1)
      DO 341 I=1,L
341   QI(I)=Q(I)
350   WRITE(10,355)
355   FORMAT(' THE Q''S ARE:')
      DO 351 I=1,DEGD1
351   WRITE(10,232)Q(I)
      CALL DELETE ('AJRCOM21')
      CALL FOPEN(4,'AJRCOM21')
      WRITE BINARY(4)K,T,TDSTR,(P(I),I=1,31),(Q(I),I=
     11,31),(A(I),I=1,10),(B(I),I=1,10),(Z(I),I=1,10),
     1(C(I),I=1,10),(D(I),I=1,10),(PL(I),I=1,10)
      CALL FCLOS(4)
      GO TO 400
999   WRITE(10,998)
998   FORMAT(' ERROR.')
400   CALL BACK
      STOP
      END
```

```
C     PREP
      INTEGER DEGN,DEGN1,DEGD,DEGD1,TAP,TB,TA,DQF,DSF,DEGN12,
     1DEGD12
      DIMENSION P(31),Q(31),F(16),G(16),U(16),V(16)
      CALL OVERFLOW($2,$2)
2     CALL FOPEN(4,'AJRCOM13')
      READ BINARY(4)DEGN,DEGN1,DEGD,DEGD1,
     1(P(I),I=1,31),(Q(I),I=1,31),ALPHA,T,TDSTR
      CALL FCLOS(4)
      DEGN12=(DEGN1+1)/2
      DEGD12=(DEGD1+1)/2
      DO 5 I=1,DEGN12
      F(I)=0.
      G(I)=0.
      DO 7 I=1,DEGD12
      U(I)=0.
7     V(I)=0.
      IF(ALPHA .EQ. 0.)GO TO 130
      DO 10 J=1,DEGN1
10    F(1)=F(1)+P(J)*(-ALPHA)**(J-1)
      WRITE(10,12)
12    FORMAT(' THE F''S ARE:')
      WRITE(10,11)F(1)
11    FORMAT(F20.4)
      TAP=1
      TB=1
      L =DEGN/2+1
      DO 30 I=2,L
      TAP=TAP*(2*I-2)*(2*I-3)
      TA=TAP
      TB=TB*(2*I-2)*(2*I-3)
      TC=1
      F(I)=P(2*I-1)*(-1)**(I-1)
      M=DEGN+3-2*I
      DO 20 J=2,M
      TA=TA*(2*I-3+J)
      TC=TC*(J-1)
20    F(I)=F(I)+P(2*I-2+J)*(-1)**(I+J)*TA/(TB*TC)*ALPHA**(J-1)
30    WRITE(10,11)F(I)
      DO 40 J=1,DEGN
40    G(1)=G(1)+P(J+1)*(-ALPHA)**(J-1)*J
      WRITE(10,41)
41    FORMAT(' THE G''S ARE:')
      WRITE(10,11)G(1)
      TAP=1
      TB=1
      L =(DEGN-1)/2+1
      DO 60 I=2,L
      TAP=TAP*(2*I-2)*(2*I-1)
      TA=TAP
      TB=TB*(2*I-1)*(2*I-2)
      TC=1
      G(I)=P(2*I)*(-1)**(I-1)
      M=DEGN+2-2*I
      DO 50 J=2,M
      TA=TA*(2*I-2+J)
      TC=TC*(J-1)
50    G(I)=G(I)+P(2*I-1+J)*(-1)**(I+J)*TA/(TB*TC)*ALPHA**(J-1)
60    WRITE(10,11)G(I)
      DO 70 J=1,DEGD1
70    U(1)=U(1)+Q(J)*(-ALPHA)**(J-1)
      WRITE(10,71)
71    FORMAT(' THE U''S ARE:')
      WRITE(10,11)U(1)
      TAP=1
```

```
      TB=1
      L=DEGD/2+1
      DO 90 I=2,L
      TAP=TAP*(2*I-2)*(2*I-3)
      TA=TAP
      TB=TB*(2*I-2)*(2*I-3)
      TC=1
      U(I)=Q(2*I-1)*(-1)**(I-1)
      M=DEGD+3-2*I
      DO 80 J=2,M
      TA=TA*(2*I-3+J)
      TC=TC*(J-1)
80    U(I)=U(I)+Q(2*I-2+J)*(-1)**(I+J)*TA/(TB*TC)*ALPHA**(J-1)
90    WRITE(10,11)U(I)
      DO 100 J=1,DEGD
100   V(1)=V(1)+Q(J+1)*(-ALPHA)**(J-1)*J
      WRITE(10,101)
101   FORMAT(' THE V''S ARE:')
      WRITE(10,11)V(1)
      TAP=1
      TB=1
      L=(DEGD-1)/2+1
      DO 120 I=2,L
      TAP=TAP*(2*I-1)*(2*I-2)
      TA=TAP
      TB=TB*(2*I-1)*(2*I-2)
      TC=1
      V(I)=Q(2*I)*(-1)**(I-1)
      M=DEGD+2-2*I
      DO 110 J=2,M
      TA=TA*(2*I-2+J)
      TC=TC*(J-1)
110   V(I)=V(I)+Q(2*I-1+J)*(-1)**(I+J)*TA/(TB*TC)*ALPHA**(J-1)
120   WRITE(10,11)V(I)
      GO TO 200
130   WRITE(10,12)
      DO 140 I=1,DEGN12
      F(I)=P(2*I-1)*(-1)**(I-1)
140   WRITE(10,11)F(I)
      WRITE(10,41)
      L=DEGN1/2
      IF(L .EQ. 0)GO TO 151
      DO 150 I=1,L
      G(I)=P(2*I)*(-1)**(I-1)
150   WRITE(10,11)G(I)
151   WRITE(10,71)
      DO 160 I=1,DEGD12
      U(I)=Q(2*I-1)*(-1)**(I-1)
160   WRITE(10,11)U(I)
      WRITE(10,101)
      L=DEGD1/2
      IF(L .EQ. 0)GO TO 200
      DO 170 I=1,L
      V(I)=Q(2*I)*(-1)**(I-1)
170   WRITE(10,11)V(I)
200   ACCEPT "A=?",AA
      CALL DELETE('AJRCOM34')
      CALL FOPEN(4,'AJRCOM34')
      WRITE BINARY(4)(F(I),I=1,16),(G(I),I=1,16),(U(I),
     1I=1,16),(V(I),I=1,16),AA,DEGN12,DEGD12,ALPHA,T,TDSTR
      CALL FCLOS(4)
      CALL OVERFLOW($210,$220)
210   TYPE "OVER/UNDERFLOW IN PREP."
220   CALL BACK
      STOP
      END
```

```
C  NYQPRT
      COMPLEX S,GC,ARG,EARG,S1,S2,S3,S4
      REAL N1,N2,NUM,MAG,IGSTR,IGSS,MAGSTR,MAGSS,IG
      INTEGER DEGN12,DEGD12,CODE,QQ,Z,DOF,DSF,DEGN1,DEGD1
      DIMENSION F(16),G(16),U(16),V(16)
      CALL OVERFLOW($2,$2)
2     CALL FOPEN(4,'AJRCOM34')
      READ BINARY(4)(F(I),I=1,16),(G(I),I=1,16),(U(I),
     1I=1,16),(V(I),I=1,16),AA,DEGN12,DEGD12,ALPHA,T,TDSTR
      CALL FCLOS(4)
      W=0.
      ACCEPT "CODE=?",CODE
      ACCEPT "DW=?",DW,"N=?",N
      GO TO(10,20,30),CODE
10    WRITE(10,11)
11    FORMAT(/'          W              MAG(G)          ARG(G)'/)
      GO TO 40
20    WRITE(10,21)
21    FORMAT(/'          W              MAG(G*)         ARG(G*)'/)
      GO TO 40
30    WRITE(10,31)
31    FORMAT(/'          W              MAG(G**)        ARG(G**)'/)
40    DO 170 QQ=1,N
      Z=9
      IF(QQ .EQ. 1)Z=10
      DO 150 M=1,Z
      W=W+DW
      N1=F(1)
      IF(DEGN12 .EQ. 1)GO TO 50
      DO 41 I=2,DEGN12
41    N1=N1+F(I)*W**(2*I-2)
50    N2=0.
      DO 51 I=1,DEGN12
51    N2=N2+G(I)*W**(2*I-1)
      D1=U(1)
      IF(DEGD12 .EQ. 1)GO TO 70
      DO 60 I=2,DEGD12
60    D1=D1+U(I)*W**(2*I-2)
70    D2=0.
      DO 80 I=1,DEGD12
80    D2=D2+V(I)*W**(2*I-1)
      NUM=SQRT(N1**2+N2**2)
      DEN=SQRT(D1**2+D2**2)
      IF(N1 .EQ. 0.)N1=.1E-20
      AN=ATAN2(N2,N1)
      IF(D1 .EQ. 0.)D1=.1E-20
      AD=ATAN2(D2,D1)
      MAG=NUM/DEN
      ANGLE=AN-AD
      IG=MAG*SIN(ANGLE)
      RG=MAG*COS(ANGLE)
      S=(0.,1.)*W-(1.,0.)*ALPHA
      S1=-(1.,0.)*T
      S2=-(1.,0.)*TDSTR
      RS=REAL(S)
      IF(RS .EQ. 0.)RS=.1E-20
      S=(1.,0.)*RS+(0.,1.)*AIMAG(S)
      S3=S2*CSQRT(S)
      EARG=CEXP(S1*S+S3)
      GC=((1.,0.)*RG+(0.,1.)*IG)*EARG
      RGC=REAL(GC)*AA
      AIGC=AIMAG(GC)*AA
      ARG=(1.,0.)+(1.,0.)*RGC+(0.,1.)*AIGC
      GC=GC/ARG
      IG=AIMAG(GC)
      GO TO(140,120,130),CODE
120   IG=IG*W
      GO TO 140
130   IG=IG/W
140   RG=REAL(GC)
      MAG=SQRT(RG**2+IG**2)
      IF(RG .EQ. 0.)RG=.1E-20
      ANGLE=ATAN2(IG,RG)*57.296
150   WRITE(10,160)W,MAG,ANGLE
160   FORMAT(F15.4,E15.4,F15.4)
170   DW=W
      CALL OVERFLOW($210,$220)
210   TYPE "OVER/UNDERFLOW IN NYQPRT."
220   CALL BACK
      STOP
      END
```

```
C  AREAP
      COMPLEX S,GC
      REAL KP,IG,N1,N2
      INTEGER DEGN12,DEGD12,CODE,DQF,DSF,DEGN1,DEGD1
      DIMENSION AREA(17),RG(201),IG(201),F(16),G(16),U(16),V(16)
     1,GC(201)
      CALL FOPEN(4,'AJRCOM15')
      READ BINARY(4)DEGN12,DEGD12,T,TDSTR,ALPHA,T,TDSTR
      CALL FCLOS(4)
      CALL FOPEN(4,'AJRCOM34')
      READ BINARY(4)(F(I),I=1,16),(G(I),I=1,16),(U(I),
     1I=1,16),(V(I),I=1,16),AA
      CALL FCLOS(4)
      SML=.9E13
      ACCEPT "CODE=?",CODE,"QSGN=?",IQ
      ACCEPT "WS=?",WS,"WF=?",WF,"NPTS=?",NPTS,"KP=?",KP
      GO TO(2,4,6,8),IQ
 2    IQS=9
      IQF=9
      GO TO 9
 4    IQS=9
      IQF=17
      GO TO 9
 6    IQS=1
      IQF=9
      GO TO 9
 8    IQS=1
      IQF=17
 9    DO 54 I=1,NPTS
      W=WS*EXP(ALOG(WF/WS)*(I-1)/(NPTS-1))
      IF(ALPHA .EQ. 0.)ALPHA=.1E-20
      S=-(1.,0.)*ALPHA+(0.,1.)*W
      N1=F(1)
      IF(DEGN12 .EQ. 1)GO TO 11
      DO 10 J=2,DEGN12
 10   N1=N1+F(J)*W**(2*J-2)
 11   N2=0.
      DO 20 J=1,DEGN12
 20   N2=N2+G(J)*W**(2*J-1)
      D1=U(1)
      IF(DEGD12 .EQ. 1)GO TO 31
      DO 30 J=2,DEGD12
 30   D1=D1+U(J)*W**(2*J-2)
 31   D2=0.
      DO 40 J=1,DEGD12
 40   D2=D2+V(J)*W**(2*J-1)
      DMAG=D1*D1+D2*D2
      RG(I)=(N1*D1+N2*D2)/DMAG
      IG(I)=(N2*D1-N1*D2)/DMAG
      GC(I)=(RG(I)+(0.,1.)*IG(I))*CEXP(-T*S-TDSTR*CSQRT
     1(S))
      GC(I)=GC(I)/(1.+AA*GC(I))
      IG(I)=AIMAG(GC(I))
      GO TO (54,52,53),CODE
 52   IG(I)=IG(I)*W
      GO TO 54
 53   IG(I)=IG(I)/W
 54   RG(I)=REAL(GC(I))
      DO 300 I=IQS,IQF
      AREA(I)=0.
      CTN=COS(I*3.14159/18.)/SIN(I*3.14159/18.)
      DO 200 J=1,NPTS
      FF=-1./KP+IG(J)*CTN
      IF(J .LT. NPTS)GO TO 110
      IF(RG(J) .LT. FF)GO TO 120
      GO TO 135
 110  IF(RG(J) .GE. FF)GO TO 135
      IF(J .GT. 1)GO TO 130
 120  PHI=I*10.
      WRITE(10,122)
 122  FORMAT(' INSUF. R. OF W.')
      WRITE(10,121)PHI
 121  FORMAT(' PHI=',F5.1)
      GO TO 300
 130  FPRV=-1./KP+IG(J-1)*CTN
      IF(RG(J-1)-FPRV)139,132,132
 132  B=FF-RG(J)
      H=(IG(J)-IG(J-1))*B/(B+FPRV-RG(J-1))
      AREA(I)=AREA(I)+.5*B*H
      GO TO 200
 135  IF(J.EQ. 1)GO TO 200
      FPRV=-1./KP+IG(J-1)*CTN
      IF(RG(J-1)-FPRV)137,200,200
 137  B=FPRV-RG(J-1)
      H=(IG(J)-IG(J-1))*B/(B+RG(J)-FF)
      AREA(I)=AREA(I)+.5*B*H
      GO TO 200
 139  AREA(I)=AREA(I)+.5*(IG(J)-IG(J-1))*(FF-RG(J)+FPRV-RG(J-1))
 200  CONTINUE
      AREA(I)=ABS(AREA(I))
      WRITE(10,201)I,AREA(I)
 201  FORMAT(' AREA(',I2,')=',E12.4)
      IF(AREA(I) .GE. SML)GO TO 300
      SML=AREA(I)
      THETA=I*10.
 300  CONTINUE
      WRITE(10,301)SML,THETA
 301  FORMAT(' AREA(MIN)=',E12.4,'    THETA=',F5.1)
      CALL DELETE('AJRCOM51')
      CALL FOPEN(4,'AJRCOM51')
      WRITE BINARY(4)SML,CODE,WS,WF,NPTS,KP,IQ,IQS,IQF
      CALL FCLOS(4)
      CALL BACK
      STOP
      END
```

```
C  AUTOMATE
      REAL K,KP
      INTEGER DQF,DSF,CODE
      DIMENSION IPAR(31),JPAR(31),A(10),B(10),Z(10),C(10),
     1D(10),PL(10),AR(31)
      COMMON M,IPARM,JPARM,KPARM,KPAR(31),PWT(31),
     1PMIN(31),PMAX(31)
      CALL FOPEN(4,'AJRCOM16')
      READ BINARY(4)K,T,TDSTR,(A(I),I=1,10),(B(I),I=1,10),
     1(Z(I),I=1,10),(C(I),I=1,10),(D(I),I=1,10),(PL(I),I=1,10),
     1ALPHA,AA,CODE,WS,WF,NPTS,KP,IQ,NQF,NSF,DQF,DSF,IQS,IQF,SML
      CALL FCLOS(4)
      J=0
      AORG=SML
      ITOT=2*(NQF+DQF)+NSF+DSF+3
      DO 19 I=1,NQF
      J=J+1
      ACCEPT "A(I) ADJ.?",IPAR(J)
      IF(IPAR(J) .EQ. 0)GO TO 19
      JPAR(J)=1
      CALL SPEC(I,J)
19    CONTINUE
      DO 29 I=1,NQF
      J=J+1
      ACCEPT "B(I) ADJ.?",IPAR(J)
      IF(IPAR(J) .EQ. 0)GO TO 29
      JPAR(J)=2
      CALL SPEC(I,J)
29    CONTINUE
      DO 39 I=1,NSF
      J=J+1
      ACCEPT "Z(I) ADJ.?",IPAR(J)
      IF(IPAR(J) .EQ. 0)GO TO 39
      JPAR(J)=3
      CALL SPEC(I,J)
39    CONTINUE
      DO 49 I=1,DQF
      J=J+1
      ACCEPT "C(I) ADJ.?",IPAR(J)
      IF(IPAR(J) .EQ. 0)GO TO 49
      JPAR(J)=4
      CALL SPEC(I,J)
49    CONTINUE
      DO 59 I=1,DQF
      J=J+1
      ACCEPT "D(I) ADJ.?",IPAR(J)
      IF(IPAR(J) .EQ. 0)GO TO 59
      JPAR(J)=5
      CALL SPEC(I,J)
59    CONTINUE
      DO 69 I=1,DSF
      J=J+1
      ACCEPT "PL(I) ADJ.?",IPAR(J)
      IF(IPAR(J) .EQ. 0)GO TO 69
      JPAR(J)=6
      CALL SPEC(I,J)
69    CONTINUE
      J=J+1
      ACCEPT "K ADJ.?",IPAR(J)
      IF(IPAR(J) .EQ. 0)GO TO 79
      JPAR(J)=7
      IDUM=7
      CALL SPEC(IDUM,J)
79    J=J+1
      ACCEPT "T ADJ.?",IPAR(J)
      IF(IPAR(J) .EQ. 0)GO TO 89
      JPAR(J)=8
      CALL SPEC(IDUM,J)
89    J=J+1
      ACCEPT "TDSTR ADJ.?",IPAR(J)
      IF(IPAR(J) .EQ. 0)GO TO 99
      JPAR(J)=9
      CALL SPEC(IDUM,J)
99    ACCEPT "NSTEP=?",ANSTP,"KMAX=?",KMAX
      AO=SML
      DO 600 KOUNT=1,KMAX
      BIG=0.
      DO 399 J=1,ITOT
      IF(IPAR(J) .EQ. 0)GO TO 399
      JPARJ=JPAR(J)
      GO TO(110,120,130,140,150,160,170,180,190),JPARJ
110   A(KPAR(J))=1.01*A(KPAR(J))
      GO TO 200
120   B(KPAR(J))=1.01*B(KPAR(J))
      GO TO 200
130   Z(KPAR(J))=1.01*Z(KPAR(J))
      GO TO 200
140   C(KPAR(J))=1.01*C(KPAR(J))
      GO TO 200
150   D(KPAR(J))=1.01*D(KPAR(J))
      GO TO 200
160   PL(KPAR(J))=1.01*PL(KPAR(J))
      GO TO 200
170   K=1.01*K
      GO TO 200
180   T=1.01*T
      GO TO 200
190   TDSTR=1.01*TDSTR
200   IBAR=1
      CALL DELETE('AJRCOM67')
      CALL FOPEN(4,'AJRCOM67')
      WRITE BINARY(4)K,T,TDSTR,(A(I),I=1,10),(B(I),I=1,10),
     1(Z(I),I=1,10),(C(I),I=1,10),(D(I),I=1,10),(PL(I),
     1I=1,10),ALPHA,AA,CODE,WS,WF,NPTS,KP,IQ,NQF,NSF,DQF,DSF,
     1IQS,IQF,IBAR
      CALL FCLOS(4)
      CALL OVLY('AJRPUN7.SV',0)
      CALL FOPEN(4,'AJRCOM76')
      READ BINARY(4)A1
      CALL FCLOS(4)
      AR(J)=A1
      IF(A1 .NE. 0.)GO TO 210
      WRITE(10,208)J
208   FORMAT(' PERTURBATION GIVES ZERO AREA; J=',I2)
      GO TO 601
210   IF(ABS(AR(J)-AO)/PWT(J) .LT. BIG) GO TO 241
      BIG=ABS(AR(J)-AO)/PWT(J)
      M=J
241   GO TO (310,320,330,340,350,360,370,380,390),JPARJ
310   A(KPAR(J))=A(KPAR(J))/1.01
      GO TO 399
320   B(KPAR(J))=B(KPAR(J))/1.01
      GO TO 399
330   Z(KPAR(J))=Z(KPAR(J))/1.01
      GO TO 399
340   C(KPAR(J))=C(KPAR(J))/1.01
      GO TO 399
350   D(KPAR(J))=D(KPAR(J))/1.01
      GO TO 399
360   PL(KPAR(J))=PL(KPAR(J))/1.01
      GO TO 399
```

```
370   K=K/1.01
      GO TO 399
380   T=T/1.01
      GO TO 399
390   TDSTR=TDSTR/1.01
399   CONTINUE
      CALL DELETE('AJRCOM88')
      CALL FOPEN(4,'AJRCOM88')
      WRITE BINARY(4)M,IPAR(M),JPAR(M),KPAR(M)
      CALL FCLOS(4)
      CALL DELETE('AJRCOM68')
      CALL FOPEN(4,'AJRCOM68')
      WRITE BINARY(4)K,T,TDSTR,(A(I),I=1,10),(B(I),I=1,10),
     1(Z(I),I=1,10),(C(I),I=1,10),(D(I),I=1,10),
     1(PL(I),I=1,10),ALPHA,AA,CODE,WS,WF,NPTS,
     1KP,IQ,NQF,NSF,DQF,DSF,IQS,IQF,IBAR,M,PMAX(M),
     1AO,AR(M),ANSTP,PMIN(M),AORG
      CALL FCLOS(4)
      CALL OVLY('AJRPUN8.SV',0)
      CALL FOPEN(4,'AJRCOM86')
      READ BINARY(4)IPARM,(A(I),I=1,10),(B(I),I=1,10),
     1(Z(I),I=1,10),(C(I),I=1,10),(D(I),I=1,10),
     1(PL(I),I=1,10),K,T,TDSTR
      CALL FCLOS(4)
      CALL FOPEN(4,'AJRCOM76')
      READ BINARY(4)ARNEW
      CALL FCLOS(4)
      WRITE(10,510)KOUNT,ARNEW
510   FORMAT(' AREA(',I2,')=',E11.4)
      IPAR(M)=IPARM
      AO=ARNEW
      IF(ARNEW.EQ.0.)GO TO 601
      ACCEPT "INTERVENE?",IVN
      IF(IVN.NE.0)GO TO 601
600   CONTINUE
601   CALL BACK
      STOP
      END
```

```
      SUBROUTINE SPEC(I,J)
      COMMON M,IPARM,JPARM,KPARM,KPAR(31),PWT(31),
     1PMIN(31),PMAX(31)
      KPAR(J)=I
      ACCEPT "WT.=?",PWT(J),"MIN.=?",PMIN(J),"MAX.=?",PMAX(J)
      RETURN
      END
```

```
C  ARCOMP--AREA CALC. USING COMPLEX ARITH
      INTEGER CODE,DQF,DSF
      REAL K,KP
      COMPLEX G,S
      DIMENSION G(201),A(10),B(10),Z(10),C(10),D(10),PL(10),
     1AREA(17)
      CALL FOPEN(4,'AJRCOM67')
      READ BINARY(4)K,T,TDSTR,(A(I),I=1,10),(B(I),I=1,10),
     1(Z(I),I=1,10),(C(I),I=1,10),(D(I),I=1,10),
     1(PL(I),I=1,10),ALPHA,AA,CODE,WS,WF,NPTS,KP,IQ,NQF,NSF,
     1DQF,DSF,IQS,IQF,IBAR
      CALL FCLOS(4)
      DO 170 I=1,NPTS
      W=WS*EXP(ALOG(WF/WS)*(I-1)/(NPTS-1))
      IF(ALPHA.EQ.0.)ALPHA=.1E-20
      S=-(1.,0.)*ALPHA+(0.,1.)*W
      G(I)=K
      DO 110 J=1,NQF
110   G(I)=G(I)*(S*S+A(J)*S+B(J))
      DO 120 J=1,NSF
120   G(I)=G(I)*(S+Z(J))
      DO 130 J=1,DQF
130   G(I)=G(I)/(S*S+C(J)*S+D(J))
      DO 140 J=1,DSF
140   G(I)=G(I)/(S+PL(J))
      G(I)=((1.,0.)*REAL(G(I))+(0.,1.)*AIMAG
     1(G(I)))*CEXP(-T*S-TDSTR*CSQRT(S))
      G(I)=G(I)/(1.+AA*G(I))
      GO TO (170,150,160),CODE
150   WIM=W*AIMAG(G(I))
      G(I)=(1.,0.)*REAL(G(I))+(0.,1.)*WIM
      GO TO 170
160   WIM=AIMAG(G(I))/W
      G(I)=(1.,0.)*REAL(G(I))+(0.,1.)*WIM
170   CONTINUE
      SML=9.E12
      DO 600 I=IQS,IQF
      AREA(I)=0.
      CTN=COS(I*3.14159/18.)/SIN(I*3.14159/18.)
      DO 550 J=1,NPTS
      F=-1./KP+AIMAG(G(J))*CTN
      IF(J-NPTS)490,450,450
450   IF(REAL(G(J))-F)510,540,540
490   IF(REAL(G(J))-F)500,540,540
500   IF(J-1)510,510,530
510   .HI=I*10.
      WRITE(10,520)PHI
520   FORMAT(' INSUF. R. OF W, PHI=',F5.1)
      GO TO 600
530   FPRV=-1./KP+AIMAG(G(J-1))*CTN
      IF(REAL(G(J-1))-FPRV)535,533,533
533   BB=F-REAL(G(J))
      H=(AIMAG(G(J))-AIMAG(G(J-1)))*BB/(BB+FPRV-REAL(G(J-1)))
      AREA(I)=AREA(I)+.5*BB*H
      GO TO 550
540   IF(J.EQ.1)GO TO 550
      FPRV=-1./KP+AIMAG(G(J-1))*CTN
      IF(REAL(G(J-1))-FPRV)541,550,550
541   BB=FPRV-REAL(G(J-1))
      H=(AIMAG(G(J))-AIMAG(G(J-1)))*BB/(BB+REAL(G(J))-F)
      AREA(I)=AREA(I)+.5*BB*H
      GO TO 550
535   AREA(I)=AREA(I)+.5*(AIMAG(G(J))-AIMAG(G(J-1)))*
     1(F-REAL(G(J))+FPRV-REAL(G(J-1)))
550   CONTINUE
      AREA(I)=ABS(AREA(I))
      IF(AREA(I)-SML)590,600,600
590   SML=AREA(I)
      THETA=I*10.
600   CONTINUE
      CALL DELETE('AJRCOM76')
      CALL FOPEN(4,'AJRCOM76')
      WRITE BINARY(4)SML
      CALL FCLOS(4)
      CALL BACK
      STOP
      END
```

```
C  ADJUST
      REAL K,KP
      INTEGER DOF,DSF,CODE
      DIMENSION A(10),B(10),Z(10),C(10),D(10),PL(10),
     1AR(31),PMIN(31),PMAX(31),IPAR(31)
      CALL FOPEN(4,'AJRCOM88')
      READ BINARY(4)M,IPARM,JPARM,KPARM
      CALL FCLOS(4)
      CALL FOPEN(4,'AJRCOM68')
      READ BINARY(4)K,T,TDSTR,(A(I),I=1,10),(B(I),
     1I=1,10),(Z(I),I=1,10),(C(I),I=1,10),(D(I),I=1,10),
     1(PL(I),I=1,10),ALPHA,AA,CODE,WS,WF,NPTS,
     1KP,IQ,NQF,NSF,DQF,DSF,IQS,IQF,IBAR,M,PMAX(M),
     1AO,AR(M),ANSTP,PMIN(M),AORG
      CALL FCLOS(4)
      GO TO(410,420,430,440,450,460,470,480,490),JPARM
410   A(KPARM)=AMIN1(PMAX(M),A(KPARM)+AORG*A(KPARM)
     1/((AO-AR(M))*ANSTP*100.))
      A(KPARM)=AMAX1(PMIN(M),A(KPARM))
      WRITE(10,411)KPARM,A(KPARM)
411   FORMAT(' A(',I2,')=',E12.4)
      IF(A(KPARM).LT.PMAX(M))GO TO 412
      IPAR(M)=0
      GO TO 500
412   IF(A(KPARM).GT.PMIN(M))GO TO 500
      IPAR(M)=0
      GO TO 500
420   B(KPARM)=AMIN1(PMAX(M),B(KPARM)+AORG*B(KPARM)
     1/((AO-AR(M))*ANSTP*100.))
      B(KPARM)=AMAX1(PMIN(M),B(KPARM))
      WRITE(10,421)KPARM,B(KPARM)
421   FORMAT(' B(',I2,')=',E12.4)
      IF(B(KPARM).LT.PMAX(M))GO TO 422
      IPAR(M)=0
      GO TO 500
422   IF(A(KPARM).GT.PMIN(M))GO TO 500
      IPAR(M)=0
      GO TO 500
430   Z(KPARM)=AMIN1(PMAX(M),Z(KPARM)+AORG*Z(KPARM)
     1/((AO-AR(M))*ANSTP*100.))
      Z(KPARM)=AMAX1(PMIN(M),Z(KPARM))
      WRITE(10,431)KPARM,Z(KPARM)
431   FORMAT(' Z(',I2,')=',E12.4)
      IF(Z(KPARM).LT.PMAX(M))GO TO 432
      IPAR(M)=0
      GO TO 500
432   IF(Z(KPARM).GT.PMIN(M))GO TO 500
      IPAR(M)=0
      GO TO 500
440   C(KPARM)=AMIN1(PMAX(M),C(KPARM)+AORG*C(KPARM)
     1/((AO-AR(M))*ANSTP*100.))
      C(KPARM)=AMAX1(PMIN(M),Z(KPARM))
      WRITE(10,441)KPARM,C(KPARM)
441   FORMAT(' C(',I2,')=',E12.4)
      IF(C(KPARM).LT.PMAX(M))GO TO 442
      IPAR(M)=0
      GO TO 500
442   IF(C(KPARM).GT.PMIN(M))GO TO 500
      IPAR(M)=0
      GO TO 500
450   D(KPARM)=AMIN1(PMAX(M),D(KPARM)+AORG*D(KPARM)
     1/((AO-AR(M))*ANSTP*100.))
      D(KPARM)=AMAX1(PMIN(M),D(KPARM))
      WRITE(10,451)KPARM,D(KPARM)
451   FORMAT(' C(',I2,')=',E12.4)
      IF(D(KPARM).LT.PMAX(M))GO TO 452
      IPAR(M)=0
      GO TO 500
452   IF(D(KPARM).GT.PMIN(M))GO TO 500
      IPAR(M)=0
      GO TO 500
460   PL(KPARM)=AMIN1(PMAX(M),PL(KPARM)+AORG*PL(KPARM)
     1/((AO-AR(M))*ANSTP*100.))
      PL(KPARM)=AMAX1(PMIN(M),PL(KPARM))
      WRITE(10,461)KPARM,PL(KPARM)
461   FORMAT(' PL(',I2,')=',E12.4)
      IF(PL(KPARM).LT.PMAX(M))GO TO 462
      IPAR(M)=0
      GO TO 500
462   IF(PL(KPARM).GT.PMIN(M))GO TO 500
      IPAR(M)=0
      GO TO 500
470   K=AMIN1(PMAX(M),K+AORG*K/((AO-AR(M))*ANSTP*100.))
      K=AMAX1(PMIN(M),K)
      WRITE(10,471)K
471   FORMAT(' K=',E12.4)
      IF(K.LT.PMAX(M))GO TO 472
      IPAR(M)=0
      GO TO 500
472   IF(K.GT.PMIN(M))GO TO 500
      IPAR(M)=0
      GO TO 500
480   T=AMIN1(PMAX(M),T+AORG*T/((AO-AR(M))*ANSTP*100.))
      T=AMAX1(PMIN(M),T)
      WRITE(10,481)T
481   FORMAT(' T=',E12.4)
      IF(T.LT.PMAX(M))GO TO 482
      IPAR(M)=0
      GO TO 500
482   IF(T.GT.PMIN(M))GO TO 500
      IPAR(M)=0
      GO TO 500
490   TDSTR=AMIN1(PMAX(M),TDSTR+AORG*TDSTR/((AO-AR(M))*ANSTP
     1*100.))
      TDSTR=AMAX1(PMIN(M),TDSTR)
      WRITE(10,491)TDSTR
491   FORMAT(' TDSTR=',E12.4)
      IF(TDSTR.LT.PMAX(M))GO TO 492
      IPAR(M)=0
      GO TO 500
492   IF(TDSTR.GT.PMIN(M))GO TO 500
      IPAR(M)=0
500   IBR=0
      IPARM=IPAR(M)
      CALL DELETE('AJRCOM86')
      CALL FOPEN(4,'AJRCOM86')
      WRITE BINARY(4)IPARM,(A(I),I=1,10),(B(I),I=1,10),
     1(Z(I),I=1,10),(C(I),I=1,10),(D(I),I=1,10),
     1(PL(I),I=1,10),K,T,TDSTR
      CALL FCLOS(4)
      CALL DELETE('AJRCOM67')
      CALL FOPEN(4,'AJRCOM67')
      WRITE BINARY(4)K,T,TDSTR,(A(I),I=1,10),(B(I),I=1,10),
     1(Z(I),I=1,10),(C(I),I=1,10),(D(I),I=1,10),
     1(PL(I),I=1,10),ALPHA,AA,CODE,WS,WF,NPTS,KP,IQ,NQF,NSF,
     1DQF,DSF,IQS,IQF,IBAR
      CALL FCLOS(4)
      CALL OVLY('AJRPUN7.SV',0)
      CALL BACK
      STOP
      END
```

APPENDIX B.

FORMAC Program for Locus Curvature

```
INPUT TO FORMAC PREPROCESSOR
RUSH: PROCEDURE OPTIONS(MAIN);
DCL DENFMC3 ENTRY
(BIN FIXED(31),BIN FIXED (31));
FORMAC OPTIONS;
OPTSET(PRINT);
OPTSET(EXPND);
          N=1;
          LET (
          NS=K;
          DS=(S+P1)**3*(S+P2);
          N=EVAL(NS,S,#I*W);
          D=EVAL(DS,S#I*W);
          IN=COEFF(N,#I);
          RN=N-#I*IN;
          ID=COEFF(D,#I);
          RD=D-#I*ID;
          MAG2=RD*RD+ID*ID;
          );
OPTSET(NOEXPND);
          LET (
          RG=CODEM((RN*RD+IN*ID)/MAG2);
          IG=CODEM((IN*RD-RN*ID)   /MAG2);
          DRGDW=(EXPAND(DENOM(RG))*DERIV(EXPAND(NUM(RG)),W)-
          EXPAND(NUM(RG))*DERIV(EXPAND(DENOM(RG)),W))/
          DENOM(RG)**2;
          DRGDW=EXPAND(NUM(DRGDW))/DENOM(DRGOW);
          DIGDW=(EXPAND(DENOM(IG))*DERIV(EXPAND(NUM(IG)),W)-
          EXPAND(NUM(IG))*DERIV(EXPAND(DENOM(IG)),W))/
          DENOM(IG)**2;
          DIGDW=EXPAND(NUM(DIGDW))/DENOM(DIGDW);
          );
          ATOMIZE(NS;DS;N;D;IN;RN;ID;RD;MAG2;RG;IG);
          LET (
          D2RGDW2=(EXPAND(DENOM(DRGDW))*DERIV(EXPAND(NUM
          (DRGDW)),W)EXPAND(NUM(DRGDW))*DERIV(EXPAND
          (DENOM(DRGDW)),W));
          D2IGDW2=(EXPAND(DENOM(DIGDW))*DERIV(EXPAND(NUM
          (DIGDW)),W)EXPAND(NUM(DIGDW))*DERIV(EXPAND(DENOM
          (DIGDW)),W));
          POL1=NUM(DRGDW)*D2IGDW2;
          );
          ATOMIZE(DRGDW;D2IGDW2);
          LET(
          POL2=NUM(DIGDW)*D2RGDW2;
          );
          ATOMIZE(DIGDW;D2RGDW2);
          LET(
          CPOLYP=EXPAND(POL1-POL2);
          M=HIGHPOW(CPOLYP,W);
          );
          ATOMIZE(POL1;POL2);
          M=ARITH(M);
```

```
          LOOP8:  DO I=1 TO M+1
OPSET(NOPRINT);
          LET(
          I="I";
          );
          LOOP9: DO J=1 TO M/2+1;
          LET(
          J="J";
          A(I,J)=0;
          );
OPTSET(PRINT);
          END LOOP9;
          END LOOP8;
          LOOP1:  DO I=1 TO M/2;
          LET (
          I="I";
          A(1,I)=COEFF(CPOLYP,W**(M+2*(1-I)))*(-1)**
          (M/2+1-I);
          );
          END LOOP1;
          LET(
          A(1,M/2+1)=COEFF(EXPAND(CPOLYP*W),W);
          );
END
```