01 Aug 2003

Real-Time Dual Heuristic Programming-Based Neurocontroller for a Turbogenerator in a Multimachine Power System

Ganesh K. Venayagamoorthy
Missouri University of Science and Technology

Ronald G. Harley

Donald C. Wunsch
Missouri University of Science and Technology, dwunsch@mst.edu

Recommended Citation

G. K. Venayagamoorthy et al., "Real-Time Dual Heuristic Programming-Based Neurocontroller for a Turbogenerator in a Multimachine Power System," *Engineering Intelligent Systems for Electrical Engineering and Communications*, vol. 13, no. 2, pp. 105-111, CLR Publishing, Aug 2003.

Real-Time Dual Heuristic Programming-Based Neurocontroller for a Turbogenerator in a Multimachine Power System

Ganesh K. Venayagamoorthy *Senior Member, IEEE,* Ronald G. Harley *Fellow, IEEE*,
Donald C. Wunsch *Senior Member, IEEE*

***Abstract*--Based on Dual Heuristic Programming (DHP), a real-time implementation of a neurocontroller for excitation and turbine control of a turbogenerator in a multimachine power system is presented. The feedback variables are completely based on local measurements. Simulation and real-time hardware implementation on a three-machine system demonstrate that the DHP neurocontroller is much more effective than conventional PID controllers, the automatic voltage regulator, power system stabilizer and the governor, for improving dynamic performance and stability under small and large disturbances.**

***Index Terms*—Real Time Experimental Verification, Optimal DHP Neurocontroller Design, Power System Stability, Turbogenerator, Voltage Regulation, Multimachine Power System.**

I. Introduction

POWER systems containing turbogenerators are large-scale nonlinear systems. The traditional excitation controllers for the generators are designed by linear control theory based on a single-machine infinite bus (SMIB) power system model. These SMIB power system models are linearized at specific operating points and then excitation controllers are designed based on the linearized models. The drawback of this approach is that once the operating point or the system configuration changes, the performance of the controller degrades. Conservative designs are therefore used, particularly in multimachine systems, to attempt satisfactory control over the entire operating range of the power system.

In recent years, renewed interest has been shown in power systems control using nonlinear control theory, particularly to improve system transient stability [1]. Instead of using an approximate linear model, as in the design of the conventional power system stabilizer, nonlinear models are used, and nonlinear feedback linearization techniques are employed on the power system models, thereby alleviating the operating-point-dependent nature of the linear designs. Nonlinear controllers significantly improve the power system's transient stability. However, nonlinear controllers have a more complicated structure and are difficult to implement relative to linear controllers. In addition, feedback linearization methods require exact system parameters to cancel the inherent system nonlinearities, and this contributes further to the complexity of stability analysis. The design of decentralized linear controllers to enhance the stability of interconnected nonlinear power systems within the whole operating region is still a challenging task [2]. However, the use of Artificial Neural Networks (ANNs) offers a possibility to overcome this problem [3].

ANNs are able to identify/model time varying single turbogenerator systems and, with continually online training, these models can track the dynamics of the turbogenerator system, thus yielding adaptive identification. Moreover, ANN identification of turbogenerators in a multi-machine power system has also been reported [4]. Clearly, nonlinear controllers are needed for nonlinear systems. Simulation studies on adaptive critic based neurocontrollers replacing the automatic voltage regulator and turbine governor on a single-machine infinite bus system has been carried out [5]. With adaptive critics, nonlinear optimal neurocontrollers can be designed by using pre-recorded data from the power system operation, and offline training, before allowing the neural network to control the generator and therefore, the computational load of online training is avoided.

A three-machine laboratory power system example is studied with a DHP neurocontroller on one generator and the conventional controllers on the second generator. The third generator is the infinite bus, with a fixed voltage and frequency. The electric power grid is modeled using an artificial neural network which is used in the development of a neurocontroller based on derivative adaptive critics, to replace both the traditional automatic voltage regulator (AVR) and the turbine governor. Both simulation and real time hardware implementation results are presented to show that robust voltage regulation and system stability enhancement can be achieved with this proposed DHP neurocontroller, regardless of the changes in the system operating conditions and types of disturbances. This paper shows that adaptive critic design based neurocontrollers can be implemented in real time to control generators.

G.K.Venayagamoorthy is with the Department of Electrical and Computer Engineering, University of Missouri-Rolla, 1870 Miner Circle, MO 65409, USA (e-mail: gkumar@ieee.org).

R.G.Harley is with the School of Electrical and Computer Engineering, Georgia Institute of Technology, Atlanta, GA 30332-0250, USA (e-mail: ron.harley@ece.gatech.edu).

D.C.Wunsch is with the Applied Computational Intelligence Laboratory, University of Missouri-Rolla, 1870 Miner Circle, MO 65409, USA (e-mail: dwunsch@ece.umr.edu).

II. Mutlimachine Power System

For simulation studies the multi-machine laboratory power system in figure 1 is modeled in the MATLAB/SIMULINK environment using the Power System Blockset (PSB). Each machine is represented by a seventh order d-q model. There are three coils on the d-axis and two coils on the q-axis and the stator transient terms are not neglected. A three machine five-bus power system is chosen, to illustrate the effectiveness of a DHP adaptive critic based neurocontroller. The power system in figure 1 consists of two micro-alternators, each driven by a dc motor whose torque - speed characteristics are controlled by a power electronic converter to act as a micro-turbine.

The micro-machines research laboratory at the University of Natal is equipped with 3 kW, 220 V, three phase micro-alternators which were designed to have all its per-unit parameters, except the field winding resistance, the same as those normally expected of a 1000 MW generator. The parameters of the micro-alternators determined by the IEEE standards and that of the conventional controllers are given in Appendix.

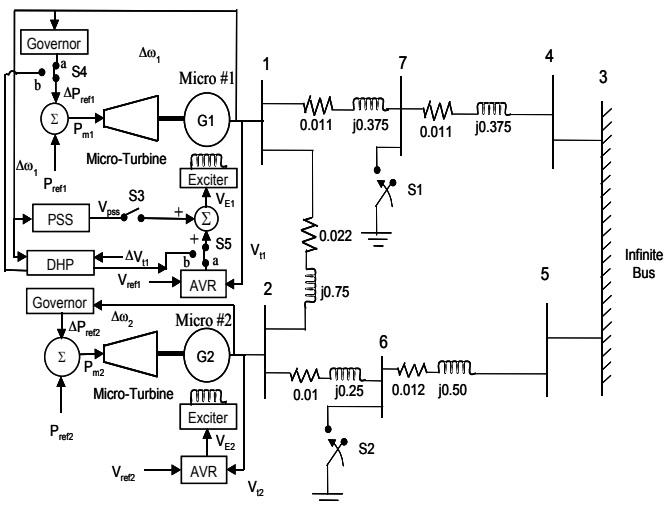

Fig. 1 Multimachine power system model with the conventional controller/DHP neurocontroller (switching with S4 and S5) on generator G1 and a conventional controller on generator G2. A power system stabilizer is added to G1 by closing switch S3. The infinite bus is the third generator in the power system.

For the practical implementation studies the system in figure 1 is setup using two micro-alternators (G1 & G2) equipped with the excitation-AVR, power system stabilizer (PSS) and turbine governor systems.

III. Dual Heuristic Programming' Based Neuro-Controller

Adaptive Critic Designs (ACDs) are neural network designs capable of optimization over time under conditions of noise and uncertainty. A family of ACDs was proposed by Werbos [6] as a new optimization technique combining concepts of reinforcement learning and approximate dynamic programming. For a given series of control actions, that must be taken in sequence, and not knowing the quality of these actions until the end of the sequence, it is impossible to design an optimal controller using traditional supervised learning.

Dynamic programming prescribes a search which tracks backward from the final step, rejecting all suboptimal paths from any given point to the finish, but retains all other possible trajectories in memory until the starting point is reached. However, many paths which may be unimportant are nevertheless also retained until the search is complete. The result is that the procedure is too computationally demanding for most real problems. In supervised learning, an ANN training algorithm utilizes a desired output and, comparing it to the actual output, generates an error term to allow learning. For a feedforward type ANN the backpropagation (BP) algorithm is typically used to get the necessary derivatives of the error term with respect to the training parameters and/or the inputs of the network. However, BP can be linked to reinforcement learning via a network called the ***Critic*** network, which has certain desirable attributes.

Critic based methods remove the learning process one step from the control network (traditionally called the "***Action*** network" or "***actor***" in ACD literature), so the desired trajectory or control action information is not necessary. The critic network learns to approximate the cost-to-go or strategic utility function, and uses the output of an action network as one of its inputs directly or indirectly. When the critic network learns, BP of error signals is possible along its input pathway from the action network. To the BP algorithm, this input pathway looks like just another synaptic connection that needs weight adjustment. Thus, no desired signal is needed. All that is required is a desired cost function J given in eq. (1), where γ is a discount factor for finite horizon problems ($0 < \gamma < 1$), and $U(.)$ is the utility function or local cost.

$$J(t)=\sum_{k=0}^{\infty}\gamma^{k}U(t+k) \tag{1}$$

The Critic and the Action networks can be connected together directly (Action-dependent designs) or through an identification model of a plant (Model-dependent designs) [4] – [5]. There are three classes of implementations of ACDs called Heuristic Dynamic Programming (HDP), Dual Heuristic Programming (DHP), and Globalized Dual Heuristic Dynamic Programming (GDHP), listed in order of increasing complexity and power [6]. Detailed explanations on DHP critic and action networks are given in [5, 7, 8]. This paper presents the DHP model dependent neurocontroller design, and compares its performance against the results obtained using conventional PID controllers.

A. Critic Neural Network

The DHP critic network is trained forward in time, which is of great importance for real-time operation. DHP has a critic network which estimates the derivatives of J with respect to a vector of observables of the plant, ΔY. The critic network learns minimization of the following error measure over time:

$$\|E\|=\sum_{t}E^{T}(t)E(t) \tag{2}$$

where $$E(t)=\frac{\partial J[\Delta Y(t)]}{\partial \Delta Y(t)}-\gamma\frac{\partial J[\Delta Y(t+1)]}{\partial \Delta Y(t)}-\frac{\partial U(t)}{\partial \Delta Y(t)} \quad (3)$$

where $\partial(.)/\partial\Delta Y(t)$ is a vector containing partial derivatives of the scalar (.) with respect to the components of the vector ΔY. The DHP critic network's training is more complicated than in HDP [5] since there is a need to take into account all relevant pathways of BP as shown in figure 2, where the paths of derivatives and adaptation of the critic are depicted by dashed lines.

In the DHP scheme, application of the chain rule for derivatives yields:

$$\frac{\partial J[\Delta Y(t+1)]}{\partial \Delta Y_i(t)}=\sum_{i=1}^{n}\lambda_i(t+1)\frac{\partial Y_i(t+1)}{\partial \Delta Y_i(t)}+\sum_{k=1}^{m}\sum_{i=1}^{n}\lambda_i(t+1)\frac{\partial \Delta Y_i(t+1)}{\partial A_k(t)}\frac{\partial A_k(t)}{\partial \Delta Y_i(t)} \quad (4)$$

where $\lambda_i(t+1) = \partial J[\Delta Y(t+1)]/\partial\Delta Y_i(t+1)$, and n, m are the numbers of outputs of the model and the action neural networks, respectively. By exploiting eq. (4), each of n components of the vector $E(t)$ from eq. (3) is determined by eq. (5).

$$E(t)=\frac{\partial J[\Delta Y(t)]}{\partial \Delta Y_i(t)}-\gamma\frac{\partial J[\Delta Y(t+1)]}{\partial \Delta Y_i(t)}-\frac{\partial U(t)}{\partial \Delta Y_i(t)}-\sum_{k=1}^{m}\frac{\partial U(t)}{\partial A_k(t)}\frac{\partial A_k(t)}{\partial \Delta Y_i(t)} \quad (5)$$

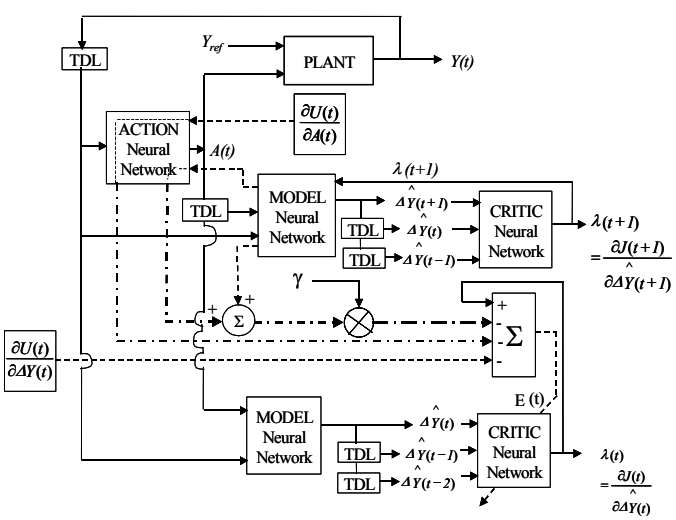

Fig. 2 DHP critic network adaptation. This diagram shows the implementation of (5). The same critic network is shown for two consecutive times, t and $t+1$. Discount factor $\gamma = 0.5$. BP paths are shown by dashed lines. The output of the critic network $\lambda(t+1)$ is backpropagated through the Model from its outputs to its inputs, yielding the first term of (4) and $\partial J(t+1)/\partial A(t)$. The latter is backpropagated through the Action from its output to its input forming the second term of (4). BP of the vector $\partial U(t)/\partial A(t)$ through the Action results in a vector with components computed as the last term of (5). The summer produces the error vector $E(t)$ for critic training. More details given in [7].

B. Action Neural Network

The action network is adapted in figure 3 by propagating $\lambda(t+1)$ back through the model to the action. The goal of such adaptation is expressed by eq. (6) and weights' update expression when applying BP [8] is given by eq. (7), where η_2 is a positive learning rate and W_A is the weights of the action neural network in the DHP scheme. The general derivation of the equations in this section are explained in [7, 8] in detail.

$$\frac{\partial U(t)}{\partial A(t)}+\gamma\frac{\partial J(t+1)}{\partial A(t)}=0\ \forall t \quad (6)$$

$$\Delta W_A=-\eta_2\left[\frac{\partial U(t)}{\partial A(t)}+\frac{\partial J(t+1)}{\partial A(t)}\right]^T\frac{\partial A(t)}{\partial W_A} \quad (7)$$

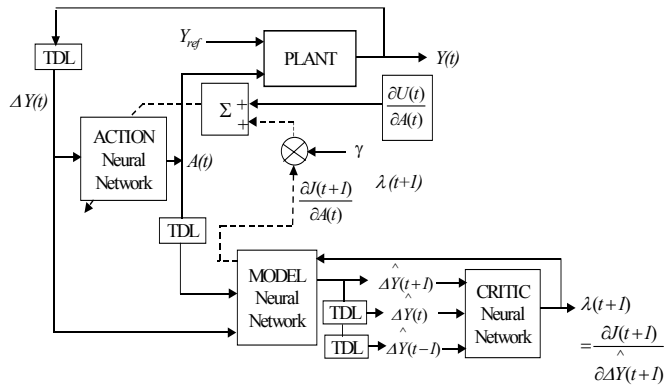

Fig. 3 DHP action network adaptation. BP paths shown with dashed lines. The output of the critic $\lambda(t+1)$ at time $(t+1)$ is backpropagated through the Model from its outputs to its inputs, and the resulting vector is multiplied by γ and added to $\partial U(t)/\partial A(t)$. Then an incremental adaptation of the action network is carried in accordance with (7). More details given in [7].

IV. Simulation And Practical Implementation of the DHP Based Neurocontroller Results

The training procedure for the critic and action networks is similar to adaptive critic designs reported earlier [7]. It consists of two training cycles: the critic's and the action's. The critic's adaptation is done initially with a pretrained action network, to ensure that the whole system, consisting of the ACD and the power system, remains stable. The action network is pretrained on a linearized model of the generator. The action is trained further while keeping the critic network parameters fixed. This process of training the critic and the action one after the other is repeated until an acceptable performance is achieved. The flowcharts for the Critic and Action network, and the overall training are shown in figures 4, 5 and 6 respectively. The ANN model parameters are assumed to have converged globally during its offline training [4] and, it is not adapted concurrently with the critic and action networks. The ANN model is trained with pseudorandom binary signals (PRBS) [4]. The utility function $U(t)$ is chosen to reflect the cost at given time based on current and past control signals applied to the plant. The design of the $U(t)$ is explained in detail in [7]. Once the critic network's and action network's weights have converged, the action network (neurocontroller) is connected to the generator G1 (figure 1) with the switches S4 and S5 in positions b.

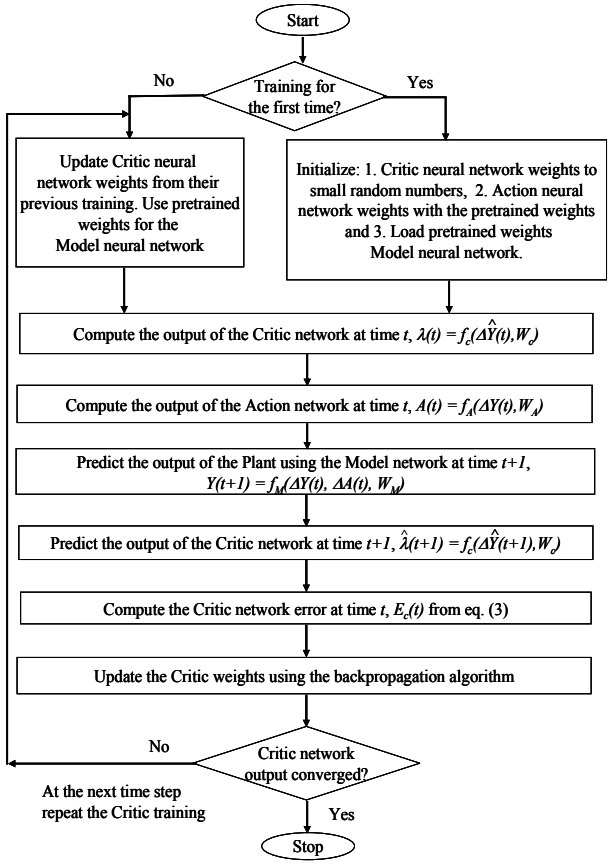

Fig. 4 Flowchart for the DHP Critic neural network training.

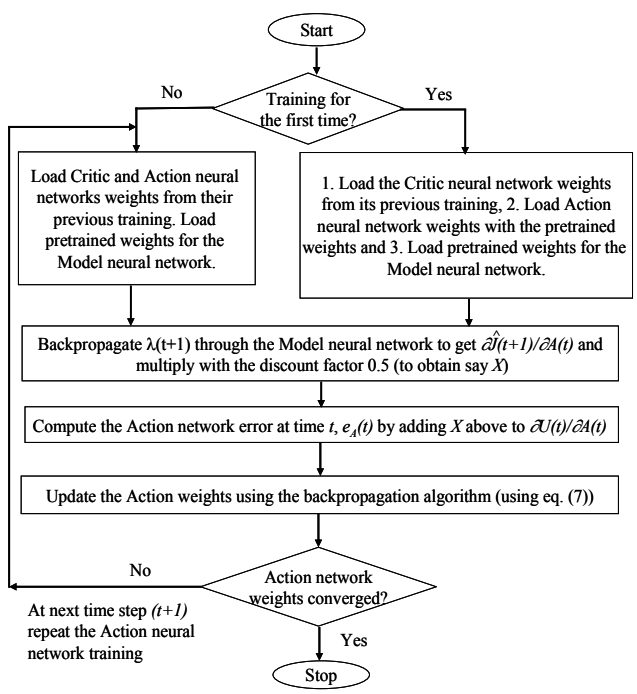

Fig. 5. Flowchart for the DHP Action neural network training.

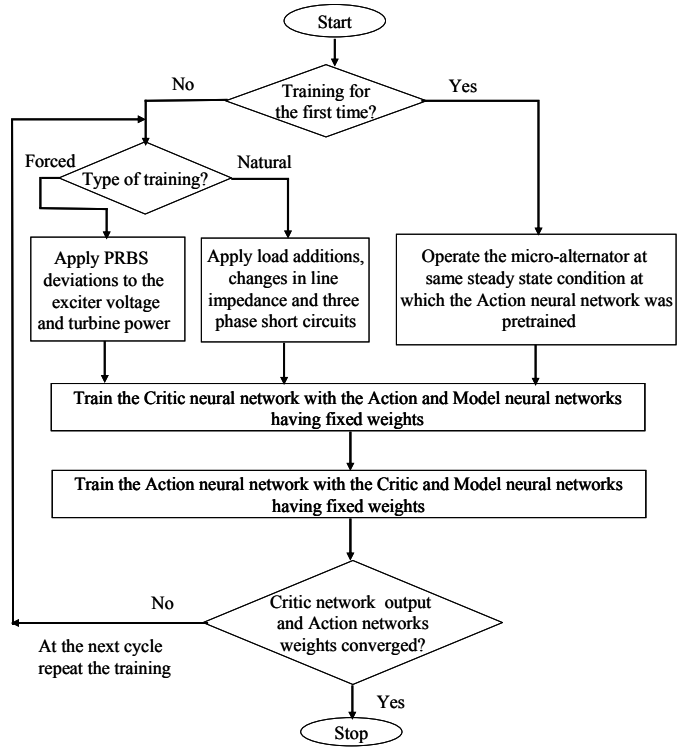

Fig. 6 Overall training steps for the DHP Critic and Action neural networks.

At different operating conditions and disturbances, the transient performances of the action network is compared, with that of conventional controllers. At the *first* operating condition (real power P = 0.2 pu, reactive power Q = -0.02 pu) a 3% step increase occurs in the desired terminal voltage of G1. The conventional controllers are fine tuned at this operating condition to give their best performances [9]. Figure 7 shows that the DHP neurocontroller (case C) provides superior damping unlike with the AVR and governor combination (case A), and even with power system stabilizer added to G1 (case B).

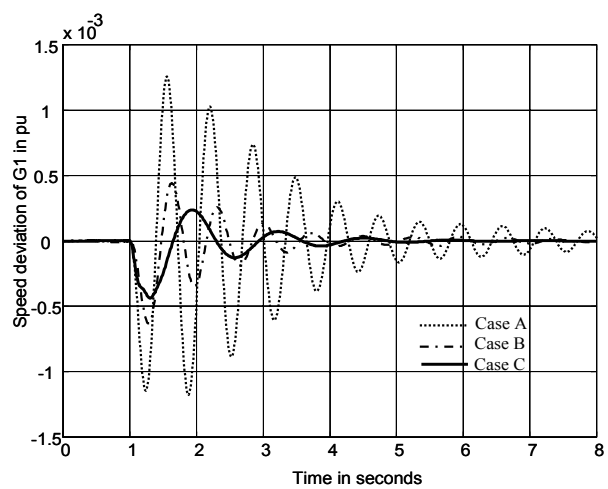

Fig. 7 Simulated speed deviation of generator G1 for a 3% step change in its terminal voltage reference.

At the *second* operating condition (P = 0.5 pu, Q = 0.15 pu), a 100 ms short circuit occurs close to bus 7 (figure 1). Figure 8 shows that the DHP neurocontroller is robust to changes in

operating conditions and has better damping on the speed deviation of G1 compared to the conventional controllers.

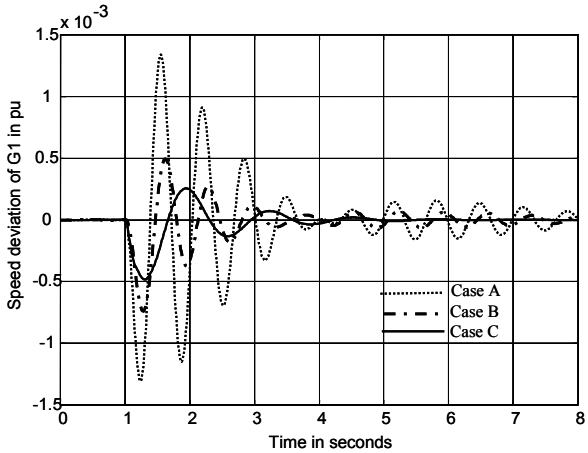

Fig. 8 Simulated speed deviation of generator G1 for a 100 ms three phase temporary short circuit at bus 7.

Figures 9, 10, 11 and 12 show hardware implementation results for an operating condition (P = 0.3 pu & Q = 0 pu) where the conventional controllers (cases A & B) are not fine tuned. Figures 9 and 10 show the load angle and terminal voltage respectively responses for a 125 ms 3-phase short circuit at bus 7 (figure 1).

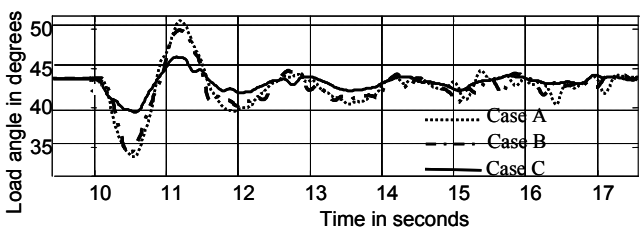

Fig. 9 Measured load angle response of G1 for a temporary 125 ms three phase short at bus 7 at an operating condition where the cases A & B do not excel.

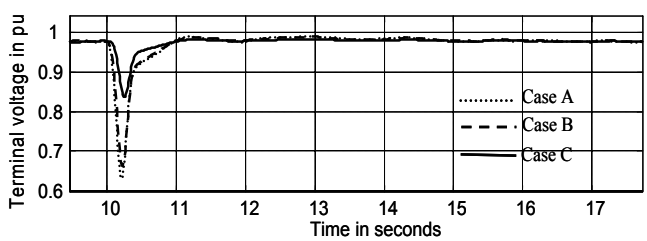

Fig. 10 Measured terminal voltage response of G1 for a temporary 125 ms three phase short at bus 7 at an operating condition where the cases A & B do not excel.

Figures 11 and 12 show the load angle and terminal voltage respectively responses when the transmission line impedance between buses 1 and 4 (figure 1) is doubled. All these results show that at operating conditions different from the one at which the AVRs, governors and power system stabilizer were tuned, and for large disturbances, their performance has degraded. The DHP neurocontroller, on the other hand, has given excellent performance under all the conditions tested both in simulation and real time implementations.

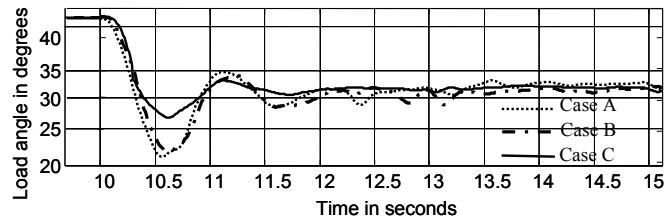

Fig. 11 Measured load angle response of G1 when the transmission line impedance between buses 1 & 4 is doubled at an operating condition where the cases A & B do not excel.

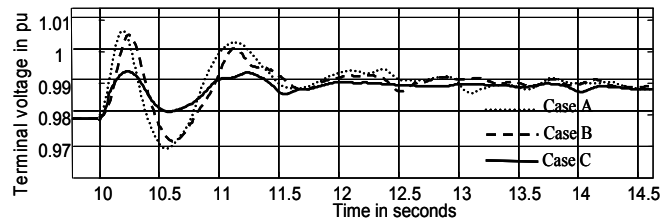

Fig. 12 Measured terminal voltage response of G1 when the transmission line impedance between buses 1 & 4 is doubled at an operating condition where the cases A & B do not excel.

V. Conclusions

A new method, based on derivative adaptive critics for the design of neurocontrollers for generators in a multi-machine power system, has been presented. All control variables are based on local measurements, thus, the control is decentralized. The results show that such neurocontrollers ensure a superior transient response throughout the system, for different disturbances and operating conditions, compared to the conventional controllers, the AVRs, governors and power system stabilizers. The success of such neurocontrollers are as a result of using *deviation signals*, having a *nonlinear model* of the system and using the *powerful DHP critic* neural network to learn from. The use of such intelligent nonlinear controllers will allow power plants on the electric power grid to operate closer to their stability limits thus producing more electric power per invested Dollar of capital equipment.

VI. References

[1] W.Mielczarski and A.Zajaczkowski, “Nonlinear field voltage control of a synchronous generator using feedback linearization”, *Automatica*, vol. 30, 1994, pp. 1625-1630.

[2] Z.Qiu, J.F.Dorsey, J.Bond and J.D.McCalley, “Application of robust control to sustained oscillations in power systems”, *IEEE Transactions on Circuits System*, I, vol. 39, 1992, pp. 470-476.

[3] M.L.Jordan, R.A.Jacobs,. Learning to control an unstable system with forward modeling, edited by D. S. Touretzky, *Advances in Neural Information Processing Systems 2*, pp. 324-331. Morgan Kaufmann publishers, 1989.

[4] G.K. Venayagamoorthy, R.G. Harley and D.C. Wunsch, “Experimental Studies with Continually Online Trained Artificial Neural Network Identifiers for Multiple Turbogenerators on the Electric Power Grid”, *IEEE-INS International Joint Conference on Neural Networks,* July 2001, Washington DC, USA, vol. 2, pp. 1267 - 1272.

[5] G.K. Venayagamoorthy, R.G. Harley and D.C. Wunsch, "Comparison of Heuristic Dynamic Programming and Dual Heuristic Programming Adaptive Critics for Neurocontrol of a Turbogenerator", *IEEE*

Transactions on Neural Networks, vol. 13, no. 3, May 2002, Page(s): 764 -773.

[6] P.Werbos, "Approximate Dynamic Programming for Real-Time Control and Neural Modeling, in *Handbook of Intelligent Control*, White and Sofge, Eds., Van Nostrand Reinhold, ISBN 0-442-30857-4, pp 493 – 525.

[7] G.K. Venayagamoorthy, R.G. Harley and D.C. Wunsch, "Dual Heuristic Programming Excitation Neurocontrol for Generators in a Multimachine Power System", *IEEE Transactions on Industry Applications*, vol. 39, no. 2, March 2003, pp. 382 -394.

[8] D.Prokhorov, D Wunsch, "Adaptive critic designs", *IEEE Transactions on Neural Networks,* vol. 8, no.5, pp 997-1007, 1997.

[9] W.K.Ho, C.C.Hang, L.S.Cao, "Tuning of PID controllers based on gain and phase margin specifications", *Proceedings of the 12th Triennial World Congress on Automatic Control*, pp. 199 –202, 1993.

VII. Appendix

TABLE I
GENERATOR G1 & G2 PARAMETERS.

$T_{d0}' = 4.50$ s	$X_d' = 0.205$ pu	Rs = 0.006 pu
$T_{d0}'' = 33$ ms	$X_d'' = 0.164$ pu	H = 5.68 s
$T_{q0}'' = 0.25$ s	$X_q = 1.98$ pu	No. of Poles = 4
$X_d = 2.09$ pu	$X_q'' = 0.213$ pu	

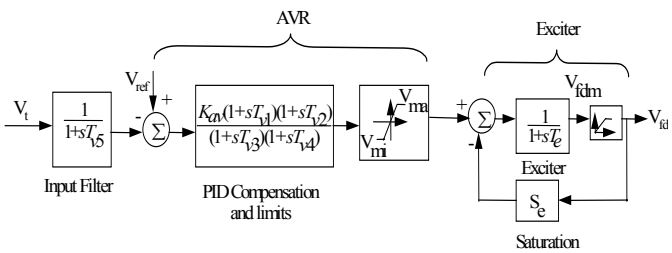

Fig. 13. Block diagram of the AVR and exciter combination of G1 & G2.

TABLE II
AVR AND EXCITER TIME CONSTANTS OF G1 & G2.

T_{v1}	0.616 s	T_{v5}	0.0235 s
T_{v2}	2.266 s	T_e	0.47 s
T_{v3}	0.189 s	K_{av}	0.003
T_{v4}	0.039 s		

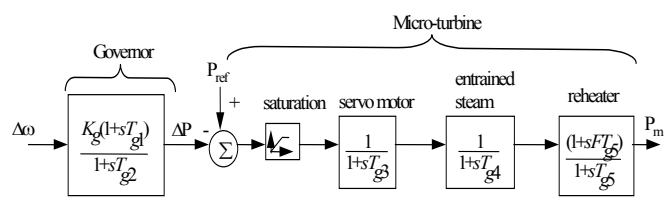

Fig. 14. Block diagram of the micro-turbine and governor combination of G1 & G2.

TABLE III
MICRO-TURBINE AND GOVERNOR TIME CONSTANTS OF G1 & G2.

Phase advance compensation, T_{g1}	0.264 s
Phase advance compensation, T_{g2}	0.0264 s
Servo time constant, T_{g3}	0.15 s
Entrained steam delay, T_{g4}	0.594 s
Steam reheat time constant, T_{g5}	2.662 s
pu shaft output ahead of reheater, F	0.322
Governor gain, K_g	0.05

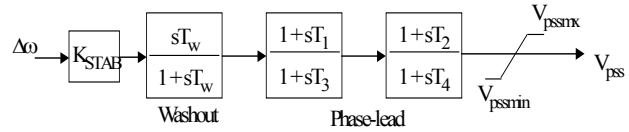

Fig. 15. Block diagram of the power system stabilizer on generator G1.

TABLE IV
PSS TIME CONSTANTS AND GAIN

T_W	3 s	T_3	0.045 s
T_1	0.2 s	T_4	0.045 s
T_2	0.2 s	K_{STAB}	33.93

VIII. Biographies

Ganesh Kumar Venayagamoorthy (S'91-M'97-SM'02) was born in Jaffna, Sri Lanka. He received a BEng (Honors) degree with a First class in Electrical and Electronics Engineering from the Abubakar Tafawa Balewa University, Bauchi, Nigeria, in March 1994. He received his MScEng and PhD degrees in Electrical Engineering from the University of Natal, Durban, South Africa, in April 1999 and February 2002 respectively. He was appointed as a Lecturer with the Durban Institute of Technology, South Africa during the periods of March 1996 to April 2001 and thereafter as a Senior Lecturer from May 2001 to April 2002 where he lectured Control Systems and Signal Processing among other courses. He was a Research Associate at the Texas Tech University, USA in 1999 and at the University of Missouri-Rolla, USA in 2000/2001. He is currently an Assistant Professor at the University of Missouri-Rolla, USA. His research interests are in power systems, control systems, computational intelligence and evolving hardware. He has published over 60 papers in refereed journals and international conferences. Dr. Venayagamoorthy was a 2001 recipient of the IEEE Neural Network Society summer research scholarship and a Member of SAIEE (South Africa) since 1995.

Ronald G. Harley (M'77-SM'86-F'92) was born in South Africa. He obtained a BScEng degree (cum laude) from the University of Pretoria in 1960, and a MScEng degree (cum laude) from the same University in 1965, and PhD from London University in 1969. In 1970 he was appointed to the Chair of Electrical Machines and Power Systems at the University of Natal in Durban, South Africa. He is currently at the Georgia Institute of Technology, Atlanta, USA. He has co-authored some 250 papers in refereed journals and international conferences. Altogether 9 papers attracted prizes from journals and conferences. Ron is a Fellow of the SAIEE, a Fellow of the IEE, and a Fellow of the IEEE. He is also a Fellow of the Royal Society in South Africa, a Fellow of the University of Natal, and a Founder Member of the Academy of Science in South Africa formed in 1994. He has been elected as a Distinguished Lecturer by the IEEE Industry Applications Society for the years 2000 and 2001. His research interests are in the dynamic and transient behavior of electric machines and power systems, and controlling them by the use of power electronics and modern control algorithms.

Donald C Wunsch (SM'94) received the Ph.D. EE and the M.S. App. Math from the Univ. of Washington in '91 and '87, the B.S. in App. Math from the Univ. of New Mexico in '84. Since '99, he is the M.K. Finley Missouri Distinguished Prof. of Computer Engineering in the Dept. of ECE, Univ. of Missouri - Rolla, and heads the Applied Computational Intelligence Laboratory. Previously, he was Associate Prof. at Texas Tech. Prior to joining Tech in '93, he was Senior Principal Scientist at Boeing, where he invented the first optical ART1 neural network, and other applied research. Current research includes adaptive critic designs; neural network optimization, forecasting and control; and fuzzy risk assessment for high-consequence surety. He is an Academician in the Intl. Academy of Technological Cybernetics, and is recipient of the Halliburton Award for excellence, and a NSF CAREER Award. He is a member of the Intl. Neural Network Society, ACM and a life member of the AAAI. He has well over 100 publications in computational intelligence and attracted well over $3 million in competitively awarded sponsored research funding since 1994, and over $1 million since coming to UMR.