UMR-MEC Conference on Energy

09 Oct 1975

Osmo - Power. Osmotic Work; Energy Production from Osmosis of Fresh Water/Sea-Water Systems

H. H. G. Jellinek

Recommended Citation

Jellinek, H. H. G., "Osmo - Power. Osmotic Work; Energy Production from Osmosis of Fresh Water/Sea-Water Systems" (1975). *UMR-MEC Conference on Energy*. 68.
https://scholarsmine.mst.edu/umr-mec/68

OSMO - POWER

OSMOTIC WORK; ENERGY PRODUCTION FROM OSMOSIS OF FRESH WATER/SEA-WATER SYSTEMS

H. H. G. Jellinek
Department of Chemistry
Clarkson College of Technology
Potsdam, New York

It is imperative that new and ecologically acceptable energy sources are made available. Solar energy is a source which seems to be inexhaustible and free of pollution hazards. One vast source, which can be considered to be a solar energy source consists of the system fresh water/sea water. Fresh water is continually removed by the hydrological cycle where water evaporates from the ocean due to solar radiation and is eventually precipitated again in the form of fresh water feeding various rivers. Fresh water and ocean (salt) water mix when rivers flow into the oceans. The different chemical potentials are equalized due to this mixing in estuaries not producing any work similarly as when gas escapes into a vacuum. However, the difference in chemical potentials of sea water and fresh water can be utilized and made to produce work if the mixing is allowed to proceed via semipermeable membranes, that is to say if use is made of the osmotic process. This would be equivalent to producing work letting steam move a piston which has a counter pressure slightly lower than the steam pressure. This work can be transformed into electrical energy. In other words use is made of the osmotic process.

A simple osmometer is illustrated in Fig 1. In the past such osmometers have been used for measuring osmotic pressure - i. e. the equilibrium pressure which is obtained by placing an osmotic cell containing a solution into pure water. Molecular weights of polymers can, for instance, be measured in this way. Nobody looked at osmosis as a source of energy. However, osmosis can produce work; the simplest ways of doing this would either be (1) to let the liquid rise to a certain height utilizing the potential energy by just dropping the liquid to a lower level thus producing electrical energy by means of a turbine, or (2) to cut the tube in which liquid rises near the surface of the fresh water making the opening into a jet and the liquid emerging from the jet drive a turbine producing electrical energy. These two cases will be discussed in some detail in this paper.

The maximum (reversible) work,

$$- W_{max} = \int_{n_1}^{n_2} RT \ln a_w \, dn \qquad (1)$$

where n_1 and n_2 are the initial and final numbers of moles of salt solution; a_w is the water activity, R and T are the ideal gas constant and absolute temperature, respectively. Eq. (1) can be evaluated for dilution by one mole of fresh water in the form,

$$- W_{max} = \Pi_o v_1 \qquad (2)$$

Here Π_o is the osmotic pressure of the saline solution and v_1 is the partial molar volume of water (i. e. 18.0 ml/mole).

A saline solution of 35g of NaCl for each kg of solution has similar osmotic properties to those of average sea water and has an osmotic pressure of Π_o = 24.8 atm. at 20°C.$^{1)}$. This pressure represents the weight of a water column of one square centimeter cross section 256.2 m high (or 250m of saline water of density 1.025). Osmotic pressure has a small temperature coefficient; the osmotic pressure for the above case is 23.1 atm. at 0°C.

The maximum (reversible) work which can be obtained if 1ℓ = 1000 cm_3 of fresh water enters a large amount of this saline solution (i. e. large osmotic cell, so that dilution is negligible) is 2.562×10^2 kgm or 6.98×10^{-4} kw hr. The same result can also be obtained by considering the following thought experiment: consider a very large (infinite) amount of the saline solution (i. e. sea water) in an osmotic cell to which a tube is attached in which the liquid rises due to the osmotic pressure of the solution. The sea water is separated from fresh water by a semipermeable membrane. The tube has a height which is a differential shorter than the equilibrium height for the osmotic pressure. Assume that this height has been reached by the solution; the tube is open at the top. One liter of water passes the semipermeable membrane and enters the osmotic cell infinitely slowly. At the same time one liter must emerge from the top of the tube. This is equivalent to lifting 1ℓ of the solution through the height h_o i. e. the equilibrium height for the system. The work done by the osmotic pressure in this case is $W_{max} = 2.562 \times 10^2$ kgm. This work is equal to that given by eqs. (1) or (2).

Thus there is a practically inexhaustible supply of energy near any location where fresh water (i. e. river water) flows into sea water (i. e. near estuaries and also at locations where salt deposits and river water are available). One can utilize this energy by mixing fresh water with sea water (i. e. equalizing their chemical potentials) using semipermeable membranes in a similar way as steam can produce work pushing a piston and not just being released into a vacuum. It is visualized that fresh water is diverted in large pipes to sites where it meets sea water, separating them by semipermeable membranes. Either potential or kinetic energy or both could be obtained in this way. The slightly diluted sea water could be channeled back to the sea where it mixes with further river water which was not used in the osmotic process. It is clear that fast enough membranes (i. e. membranes with sufficiently high fluxes should be available). All the practical experience of membrane technology which has been developed for reverse osmosis

(i. e. desalination) can be utilized for this purpose. It is also possible, in principle, to use the somewhat diluted sea water and the energy obtained from the osmotic process for desalination of this diluted sea water. Not only can lower pressures be used for this reverse osmosis process because of the dilution of sea water but the energy from the osmotic process can also be utilized for this purpose.

A plant which makes use of the kinetic energy produced during the osmotic process can be pictured in simple terms as follows: 2)

Fresh water is diverted near an estuary in a large diameter pipe to a point near the coast and sea water is diverted similarly. Another possibility is to place a series of osmotic cells which have connections with sea water directly into a river near an estuary (see Fg. 2). Each cell contains a large amount of sea water and a large membrane area (i. e. the membrane areas of such a series of cells could amount to one or more km^2). The osmotic pressure in each cell is equivalent initially to 256.2m columns of water at 20^{o}C. However, the tube in which the saline water would rise is cut off very near the surface and shaped into the form of a jet. The water stream which is ejected can drive a turbine - i. e. Pelton Wheel. Each cell has such a jet and turbine; the turbines in turn are fixed on a single axle. As soon as the sea water is diluted a few percent with fresh water in an osmotic cell it is replaced by new sea water. Meanwhile, however, other cells continue ejecting liquid so that continuous energy production is maintained (see Fig. 2 for details).

Continuity and stirring of this process can also be obtained as follows. A slow stream of salt water flows continually into the osmotic cell near the membrane surface under a hydraulic pressure somewhat greater than the total back pressure from the nozzle. Hence volume v_1, originating from the continuous influx and v_2 due to osmosis are ejected per time unit from the nozzle. This does away with exchanging the salt water in the osmotic cell and also provides "stirring" near the inside membrane surface. The diameter of the nozzle has, of course, to be such that it matches the total ejected volume per time unit (i. e. $v_1 = v_2$) (see later).

This whole process can be evaluated quantitatively. The assumption has to be made, which is practically always fulfilled, that the energy provided by entering of fresh water into the cell at a certain rate can be as rapidly utilized.

(A) ENERGY PRODUCTION (NEGLIGIBLE DILUTION OF SEA WATER)

All losses are neglected for the present discussion, i. e. only the ideal case is considered. It is assumed that fresh water enters through the membrane, diluting sea water at a rate of $\left(\frac{dV}{dt}\right)_{h=o}$ ℓ/sec. The surface area of the membrane is $A\,m^2$ and the back pressure is zero, as h = 0. The maximum (reversible) power is provided by such a system where the solution is sea water or its equivalent (35g NaCl/kg of solution). If the liquid in the osmotic cell, however, is allowed to rise in a tube to a height of h meters, then the flux through the membrane is diminished in the proportion h_o-h/h_o where h_o is the equilibrium height corresponding to the osmotic pressure Π_o. In such a case the power output consists of a potential and a kinetic energy component,

$$P_{max} = \dot{m}gh + \frac{\dot{m}}{2} v_{\ell h}^2 \left(\frac{Nm}{sec}\right) \qquad (3)$$

Here $\dot{m}$ is the mass flow rate, g the acceleration due to gravity, and v_ℓ is the linear velocity in the tube (friction is neglected here; see later). Eq. (3) can also be written in the form,

$$P_{max} = 2.562 \times 10^2 \left(\frac{dV}{dt}\right)_{h=0} \left(\frac{h_o - h}{h_o}\right) \left(\frac{h}{h_o} + 1\right) \frac{kgm}{sec} \qquad (3a)$$

Here 2.562×10^2 kg m/sec is the available power, if one liter of fresh water enters the osmotic cell during one second when h = 0; $\left(\frac{dV}{dt}\right)_{h=0}$ is the actual volume flow rate in ℓ/sec at h = 0 entering the cell. As already pointed out the hydrostatic pressure (back pressure caused by the column of liquid of height h) reduces the volume flow rate by $\frac{h_o - h}{h_o}$; further, the potential energy is decreased in proportion of the actual height h to the equilibrium height h_o. This accounts for the term $\frac{h}{h_o}$.

The potential power component becomes a maximum for $h = h_o/2$, however the energy which can be extracted goes up linearly with h and at h_o the maximum available energy can be obtained in principle; however this would take place infinitely slowly. Thus, if time is not of paramount importance, more than half the maximum (reversible) energy can be extracted from the potential energy. This can be done by having a reservoir of height h where liquid is collected. This liquid can be dropped (similarly as water flows down a mountain side) driving turbines producing hydroelectric power.

Energy is lost due to friction in the tube. In this paper osmotic cells will mainly be discussed which have only short nozzles, i. e. where kinetic energy only is utilized in the form of jet streams ($h \cong 0$). In such cases back pressure is negligible and friction is small.

If the nozzle is located at the side near the top of the osmotic cell then the maximum flow rate of liquid exiting from the orifice is given by,

$$\frac{\dot{m}}{2} v_\ell^2 = \frac{dV}{dt} \Pi_o = \frac{\dot{m}}{\rho} \Pi_o \frac{cm^3}{sec} \frac{dyne}{cm^2} \qquad (4)$$

Here ρ is the density of the solution.

The dilution of the saline solution takes place practically in a reversible manner. The linear velocity of fresh water entering is extremely small therefore large membrane areas are needed (e. g. $\frac{dV}{dt} = 4.2 \times 10^{-3}$ ℓ/sec m^2 or 4.2×10^{-6} m/sec and $v_\ell = 70.9$ m/sec, see later). This maximum linear flow rate has to be matched by the cross-sectional area A_{or} of the orifice. If A_{or} is too large, kinetic energy is lost; if it is too small then back pressure is generated.

The matching orifice area is given by,

$$A_{or} = \left(\frac{dV^1}{dt}\right) \frac{1}{v_\ell} \ m^2 \qquad (5)$$

V^1 is here expressed in m^3
($1\ell = 10^{-3}$m^3)

Actually the orifice diameter or cross section is quite critical as Fig. 3 shows where the power output is plotted against the ratio R/R_o.

R_o is the radius which just matches the power input of the osmotic cells (zero back pressure). It may be possible to install an adjustable orifice which can compensate by automatically adjusting the diameter of the orifice for the bulk dilution and dilution near the membrane (see later).

The fact that the diameter is so critical makes the extraction of potential energy for this process somewhat more attractive. An application which can be envisaged, as already stated above, is the desalination of sea water. It is first diluted extracting energy during this process. The diluted sea water could then be subjected to desalination using the energy gained by the osmotic process. In addition less pressure is needed for this desalination by reverse osmosis due to the dilution of the sea water. Thus there is a substantial economic advantage in such desalination which is coupled with the osmotic process.

The maximum or reversible flow rate through the membrane can also be obtained on the basis of purely hydrodynamic considerations. A large osmotic cell filled with sea water (saline water), having a small orifice at the side near the top is immersed in fresh water (see Fig. 4).

At present, friction is not considered and dilution of sea water is assumed to be negligible during operation. v_o and v_ℓ are the linear velocities of fresh water entering the cell through the membrane and of saline solution exiting through the orifice, respectively; p_o is the ambient atmospheric pressure and Π_o is the osmotic pressure which drives fresh water through the membrane on account of the difference in chemical potentials of saline and fresh water, respectively.

The following hydrodynamic equation holds for this case considering mass unit flow rate,

$$\frac{1}{2} v_o^2 + \frac{P_o}{\rho} = \frac{1}{2} v_\ell^2 - \frac{\Pi_o}{\rho} + \frac{P_o}{\rho} \qquad (7)$$

As $v_o \cong 0$, eq. (7) reduces to,

$$\frac{1}{2} v_\ell^2 = \frac{\Pi_o}{\rho} \qquad (8a)$$

If one considers the total mass flow rate, eq. (8a) becomes,

$$\frac{1}{2} \dot{m} v_\ell^2 = \frac{\dot{m}\,\Pi_o}{\rho} \qquad (8b)$$

The total volume flow rate $\frac{dV}{dt}$ through the membrane is given by,

$$\frac{dV}{dt} = \frac{1}{2\Pi_o} \dot{m} v_\ell^2 = K A_m \Pi_o \qquad (9)$$

Here $K = \frac{v_\ell}{\Pi_o}$ and $A_m \Pi_o = \frac{1}{2} \dot{m} v_\ell$

(B) ENERGY PRODUCTION WITH DILUTION OF SEA WATER

During the process the saline solution will be continuously diluted i. e. the osmotic pressure will decrease in power. This, in turn, will also diminish the flux through the semipermeable membrane.

If the osmotic cell is very large it can, in principle, be operated in a way so that the dilution is always kept small (i. e. a few percent), that is, the sea water is renewed after quite limited dilution.

However, the dilution effect can be treated quantitatively. The dilution factor is $(V_o - V)/V_o$ where V_o is the volume of the osmotic cell completely filled with saline solution and V is the volume of fresh water which has entered the cell via the semipermeable membrane during time t. Hence, the flow rate is (this is valid for small dilutions only),

$$\frac{dV}{dt} = K\, A_m\, \Pi_o\, \frac{V_o - V}{V_o} \qquad (10)$$

Integration of eq. (10) yields,

$$V = V_o\ (1 - e^{-K\, A_m\, \Pi_o t/V_o})$$

Eq. (3) for h = 0 in terms of work becomes then,

$$W_{max,\ t} = 2.562 \times 10^2 V_o \times (1 - e^{-K\, A_m\, \Pi_o t/V_o}) \quad (\text{kg m}) \qquad (11)$$

(C) NUMERICAL EXAMPLE

As always the saline concentration is C = 35g NaCl/1 kg of solution; this is a solution osmotically equivalent to average sea water. A relatively small flow rate is assumed, i. e. $dV/dt = 4.2 \times 10^{-3}$ ℓ/sec for each m^2 of membrane area. Present-day ultra thin membranes can have flow rates ten to twenty times larger than this.

It can be calculated from eq. (3) that a power output can be obtained of $P_{max} = 1.055 \times 10^{-2}$ kw/m^2 or 1.076 kgm/sec m^2 if h = 0. Further, the mass flow rate is $\frac{\dot{m}}{2} = 2.1$ g (mass) and $v_\ell = 70.9$ m/sec which gives a matching radius for the orifice of $r = 1.37 \times 10^{-2}$ cm. The back pressure on the membrane for this case amounts to $2\,\dot{m}\,v_\ell/A_m = 5.8$ dyne/cm^2, or about 6×10^{-6} atm. This is completely negligible. This back pressure is independent of the size of A_m. For $V_o = 10^6 \ell$ and $A_m = 100m^2$ one obtains: $P_{max} = 1.06$ kw or 1.076×10^2kgm/sec, $v_\ell = 70.9$ m/sec and $r = 1.37 \times 10^{-1}$cm. In actual practice the osmotic cell and the membrane area will be much larger. If $V_o = 10^6 m^3$ and $A_m = 10^6 m^2$, an osmotic cell of quadratic cross section for such a case has an edge of 1 km length and a height of 1 m. The power output would be 1.06×10^4 kw, $v_\ell = 70.9$ m/sec and r = 13.7. The linear velocity through the membrane is so small (i. e. 4.2×10^{-6} m/sec) that, as mentioned above, the dilution proceeds essentially reversibly. Hence $\Pi_o\, dV/dt = 0.104\ell$ atm/sec or 1.076 kg m/sec for each m^2 of membrane area.

Present-day reverse osmosis membranes can deliver a power for the last case discussed above of 10^5 to 10^6 kw.

(D) LOSSES DURING OPERATION

Power losses are due to (1) dilution of sea water near the membrane (this is equivalent to polarization during reverse osmosis), (2) frictional losses in jets, (3) losses suffered during conversion of kinetic into electrical energy.

Losses due to dilution near the membrane can be minimized by stirring (e. g. a strip of the width of the osmotic cell can be moved slowly to and fro across the membrane).

Frictional and turbulent losses also occur. The flow in the short nozzle is turbulent. For a membrane area of $10^4 m^2$ ($v_\ell = 70.9$ m/sec, 2r = 2.74 cm, $\eta = 10^{-2}$ poises) Reynolds number amounts to 1.9×10^6. The percent frictional loss in a pipe of length L - 2cm is given by Darcy's equation$^{(3)}$,

$$\%\ \text{loss} = \frac{100\ f\ L}{2\ r}\ \frac{\dot{m}\ v_\ell^2}{2} \Big/ \frac{m\ v_\ell^2}{2} = \frac{f\ L}{2\ r}$$

$$= 100 \times 0.02\ \frac{2}{2.74}\% = 1.5\%$$

The above equation is not valid for short pipes. It is generally agreed, however, that the turbulent loss in short pipes is not larger than about 4%. The conversion of mechanical into electrical energy in a turbine (i. e. Pelton Wheel) is better than 90%.

Thus is seems fairly safe to assume that the total losses are not larger than ca. 25% of the ideal (maximum) power output.

(E) OSMO-ENERGY FROM POTENTIAL ENERGY

A continuous method for obtaining energy from lifting liquid can be imagined as follows. A bundle of tubular membranes has a common salt water inlet and outlet respectively, i. e. an outlet tube where the liquid can rise due to osmotic pressure. This bundle is submerged in fresh water. Salt water is introduced under a pressure P from a tube located at the level of the onset of the outlet tube. The liquid rises due to the osmotic pressure, say, to a height $\frac{h_o}{2}$ equivalent to $\frac{\Pi}{2}$. In this case P must be somewhat larger than $\frac{\Pi}{2}$. The volume of liquid is collected at $h_o/2$ corresponding to $\frac{\Pi}{2}$ consisting of the volume introduced through the inlet tube plus the volume obtained by osmosis. The water can then be suitably dropped from the height $h_o/2$ driving a turbine (see Fig. 5).

(F) ECOLOGICAL CONSIDERATIONS

The ecology of the estuary would be upset if the whole river is dammed up by the osmotic power plant. However this is not envisaged. The osmotic cell only occupies part of the river (see figure 2) and the diluted sea water is either used for desalination by reverse osmosis or taken back to the sea. Thus any ecological disturbance should be minimal.

(G) ECONOMICAL ASPECTS

The cost of the osmo-power process can be estimated by considering the cost of producing fresh water by reverse osmosis (desalination). The main difference of the osmotic and the reverse osmotic process is due to the high pressures needed for desalination, which requires costly pumping equipment. The cost of membrane material and its support is practically nil for ultrathin membranes$^{(4)}$. Such ultrathin membranes are suitable for the osmo-power process as the pressures involved are small compared with those needed for desalination of sea water.

An estimate can be made on the basis of the cost estimate given in Sourirajan's book "Reverse Osmosis"$^{(5)}$. This estimate includes fixed charges, amortization, operating capital, interest on working capital, and operating costs (labor, electricity, supply and maintenance materials).

A cost of $0.246 is calculated for producing one kgal of fresh water, using a membrane which has a flux of 1.295×10^{-6} g mole H_2O/cm^2 sec atm or 12.26 gal/ft^2 day at 24.8 atm. Electrical energy is taken at a cost of $0.005/kw hr resulting in $0.10 for each kgal of fresh water. Membrane and membrane assembly costs in Sourirajan's estimate amount to $0.069/kgal. As the membrane and its support costs for ultrathin membranes are practically zero (see ref. 4) this amount can be subtracted for our case from the costs. Similarly 90% of the power costs can be subtracted as high pressure pumping is not required for the present process. This results in $0.087/kgal. If 1 kgal of fresh water enters the sea water in the osmotic cell through the membrane, then 2.64 kw hr of energy are produced ideally. Hence the cost per kw hr amounts to 3.3 cents. However, present day ultrathin membranes have a flux of 41 gal/ft^{2}day(6). Hence the cost is reduced by a factor of 12.3/41 which results in 1.1 cents/kw hr. It has further to be considered that if an osmo-power plant is built in the near future, it would start operating in a few years' time. A recent article(7) estimates the cost of electricity produced by nuclear power as 1.5 c/kw hr in 1981. This would result in a cost of electricity generated by the osmotic process of 1.3 c/kw hr calculated in the same manner as outlined above. This cost compares favorably with the cost of producing electricity from nuclear power in 1981 and even more favorably with the cost of electricity from oil and coal due to the increasing costs of fossil fuels. If it is assumed that there is about a 25% loss in the osmotic process, the cost would then amount to 1.7 c/kw hr. i. e. slightly higher than the cost of electricity produced by nuclear power in 1981. It is anticipated that further developments in membrane technology will decrease the cost still further. The pressure involved in producing osmotic work is only 350 p.s.i. which allows one to use, in principle, extremely thin membranes as the mechanical stresses are much smaller for the osmo-power process than for desalination by reverse osmosis. Such osmo-power could be used not only near estuaries but in any location where salt deposits and fresh water are available.

CONCLUSION

Cost of electrical power or osmo-power obtained from the osmotic process compares favorably with the cost of producing power from nuclear power and more so with power from coal and oil. Osmo-power plants could be constructed in such a way that they have a minimal effect on the ecology of estuaries. In addition, the osmotic process does not produce any air or water pollution and does not present any hazards due to radioactivity.

The six largest rivers in the United States which flow into oceans have a water volume flow rate of about 9.8×10^5 c.f.s.(8) which could produce osmo-power of 7×10^7 kw. The total electrical power production in the United States during 1970 was 4.2×10^8 kw(9). Hence a considerable amount of power could be provided by the osmotic process.

REFERENCES

(1) P. K. Park, Chapter 6 in Water and and Aqueous Solutions, R. A. Horne, ed., Wiley Interscience, New York 1972.

(2) H. H. G. Jellinek, U. S. and Jap. Patent Applications 1973; see also H. H. G. Jellinek, Kogaku Kojo, 19, 87, (1975) (in English).

(3) J. K. Vennard, Elementary Fluid Mechanics, 2nd ed., J. Wiley and Sons, Inc., New York 1974, Chapter 8.

(4) North Star Research and Development Institute, Minneapolis, Minnesota; New and Ultrathin Membranes for Municipal Waste Water Treatment by Reverse Osmosis; Water Quality Office, Environmental Protection Agency; Project Number 17020 EFA, October 1970.

(5) S. Sourirajan, Reverse Osmosis, Academic Press, New York, 1970, p. 524.

(6) W. S. Gillam and H. E. Podell, Desalination 9, 201, (1971).

(7) D. J. Rose, Science 184, 457, (1974).

(8) U. S. Geological Survey Circular 44, 1949.

(9) A. L. Hammond, W. D. Metz and Th. H. Maugh II, Energy and Future, AAAS, Washington, D. C. 1973, p. 139.

Synopsis

Processes are discussed of extracting energy by mixing fresh water (river water) with electrolyte solutions (sea water) via semipermeable membranes. The energy from the process can be converted to electrical energy. Osmo-power can be based on utilizing kinetic or potential energy or both. Kinetic energy is obtained by locating a nozzle (jet) near the surface of an osmotic cell; the liquid jet emerging from such a nozzle can drive a turbine producing electrical energy. Potential energy can be obtained by raising the liquid by osmosis to a suitable height (i. e. 125 m) and letting it fall to zero height level driving a turbine. Both processes can be made continuous. Detailed calculations and plant models are presented. The osmotic process can also be coupled with desalination. Osmo-energy can be extracted and subsequently this energy can be utilized in the desalination of diluted saline water obtained by the osmotic process. Cost estimates indicate that the cost per kw hr of electrical energy from the osmotic process compares favorably with electrical energy obtained from nuclear energy and even more favorably with electrical energy produced from fossil fuels (i. e. oil and coal). Improvements in membrane technology will decrease the cost of osmo-power still further. The six largest rivers in the United States can, in principle, produce a maximum of 7×10^7 kw (the total production in the U. S. was 4.2×10^8 kw in 1970). Osmo-power can be obtained not only near estuaries but also at any locations where salt deposits and fresh water (rivers) are available. Any ecological disturbances in estuaries can be minimized by using only part of a river and by conducting diluted sea water back to the mouth of the estuary. The osmotic process does not produce any air or water pollution and presents no hazards due to radioactivity.

LEGENDS FOR FIGURES

(1) Osmotic Cell

(2) Osmo-Power Plant: A $\sim$ jet, B and C saline water outlet and inlet valves, D sea water, E fresh (river) water, Ⓑ $\sim$ cross section, M $\sim$ membrane.

(3) Power output as function of orifice radius (R_o $\sim$ matching radius for maximum power output)

(4) Π_o initial osmotic pressure, v_o $\sim$ linear velocity through membrane, p_o ambient pressure, v_ℓ linear velocity at orifice

(5) Osmo-Power Plant for utilizing potential energy. The membranes are tubular. Sea water is continuously passed through the tubes and lifted to a height equivalent to $\Pi_o/2$ in addition a volume equivalent to that entering by osmosis is lifted to the same height.

Fig. 1

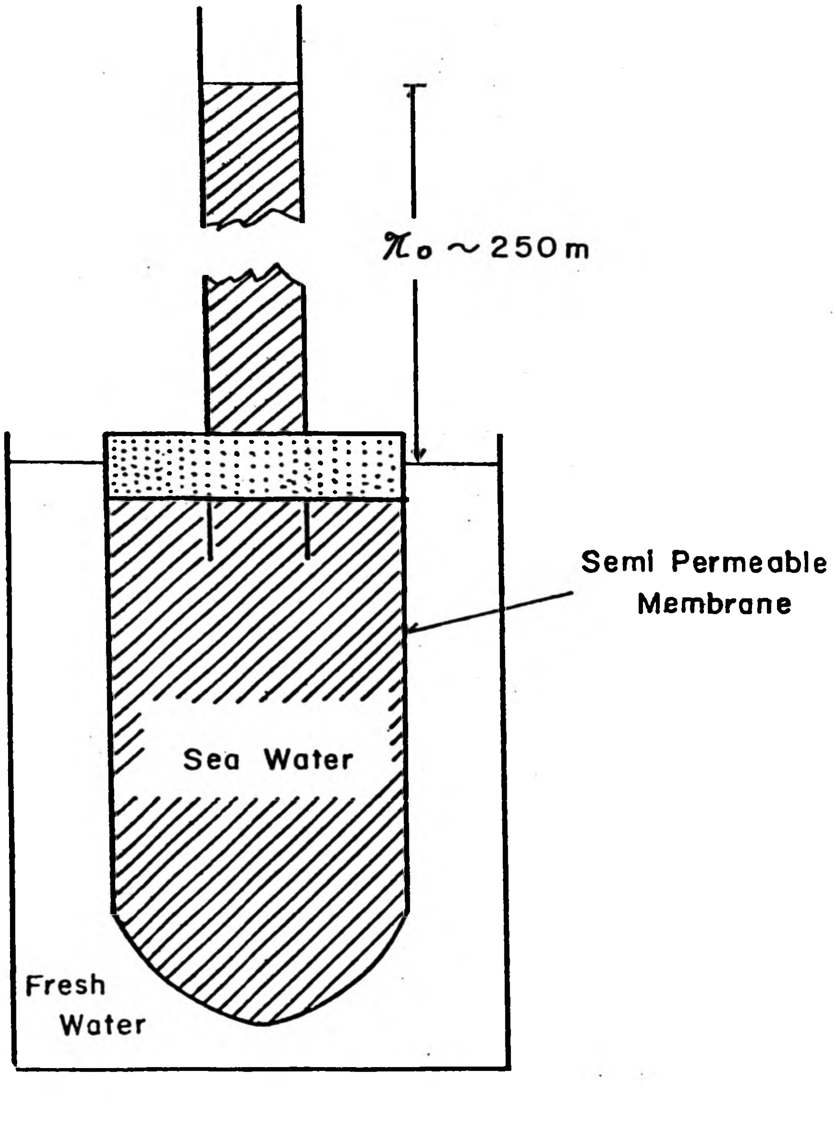

FIG. 2

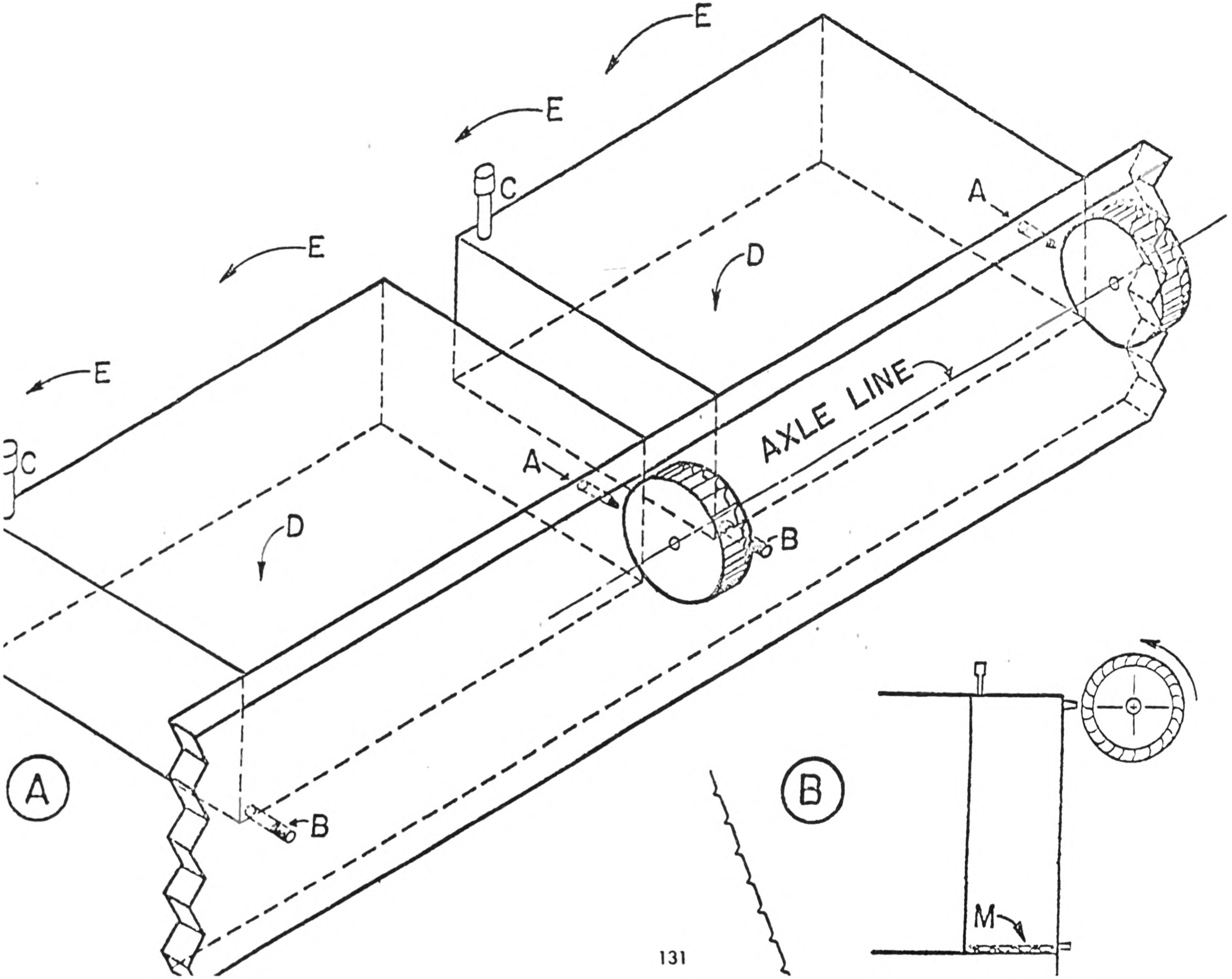

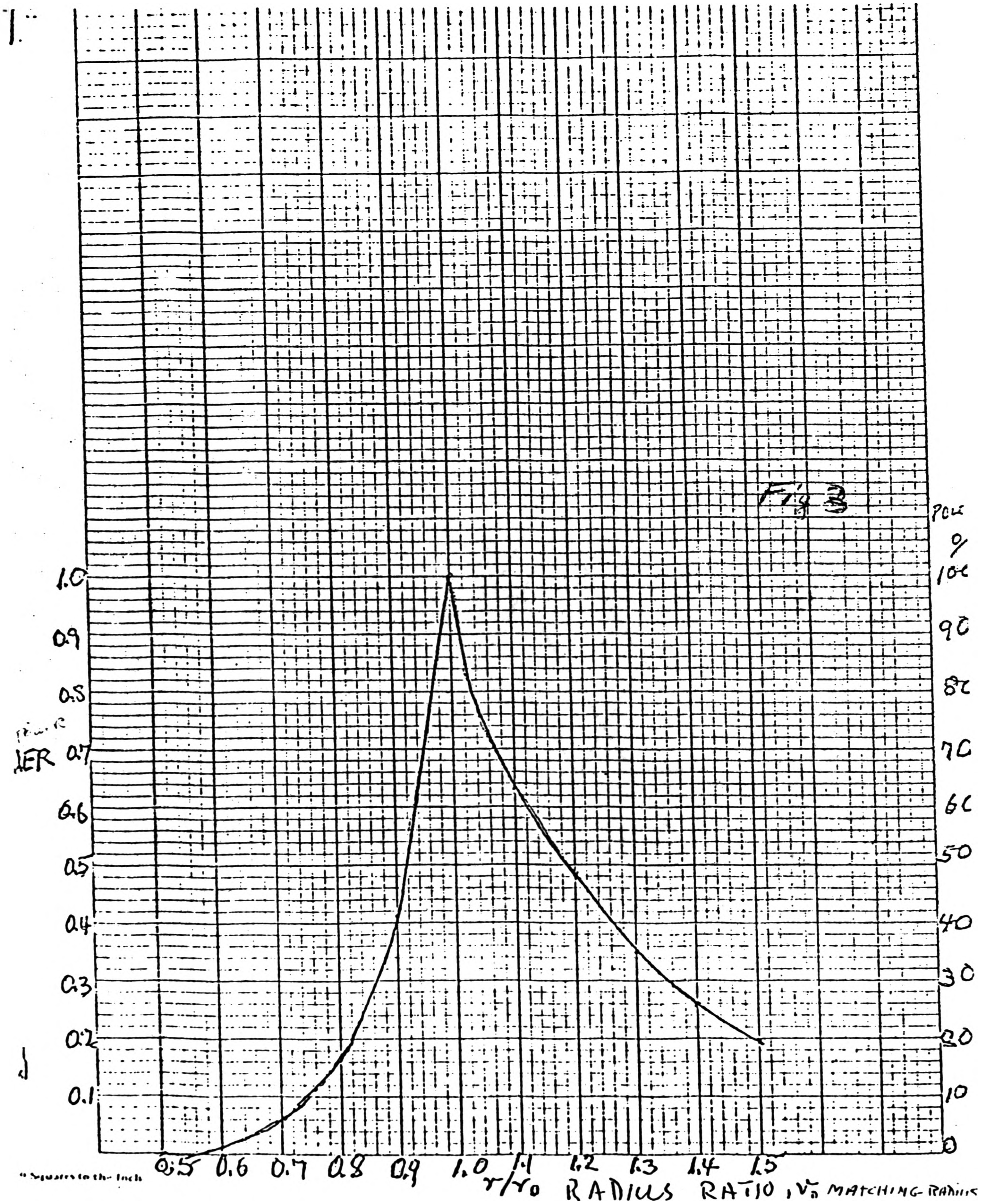
Fig 3
POW
%
100
90
80
70
60
50
40
30
20
10
0
POWER
ER
1.0
0.9
0.8
0.7
0.6
0.5
0.4
0.3
0.2
0.1
0.5
0.6
0.7
0.8
0.9
1.0
1.1
1.2
1.3
1.4
1.5
r/r0 RADIUS RATIO, r0 MATCHING RADIUS
Squares to the Inch

FIG. 4

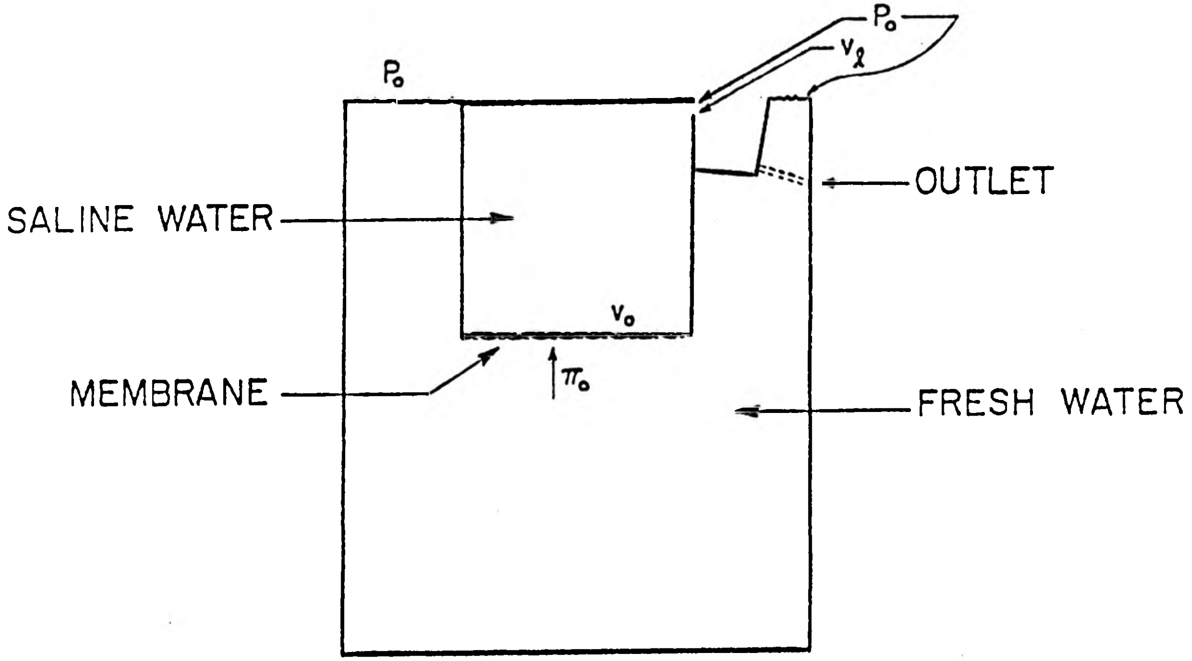

FIG. 5

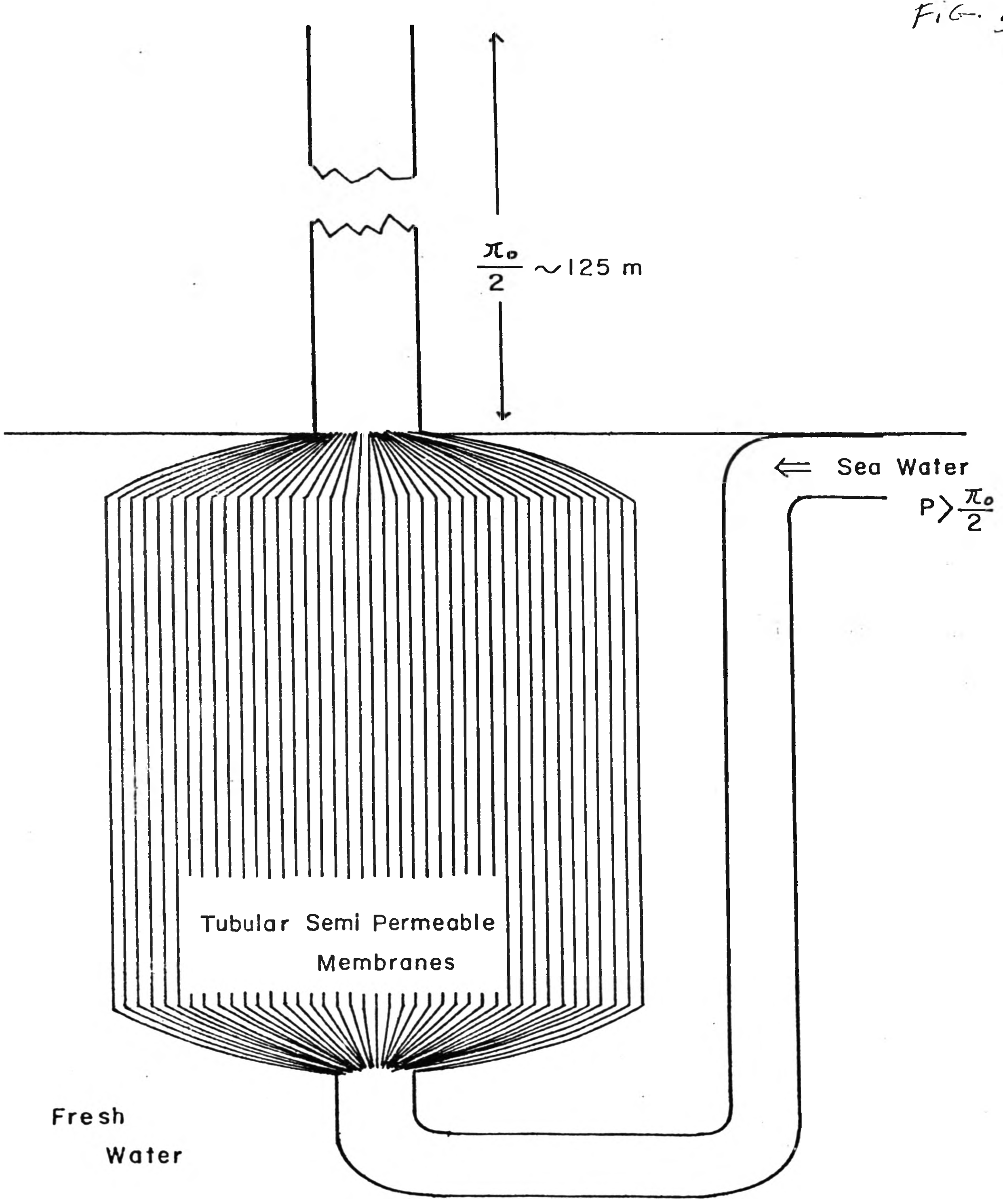

$\frac{\pi_o}{2} \sim 125$ m
⇐ Sea Water
$P > \frac{\pi_o}{2}$
Tubular Semi Permeable Membranes
Fresh Water