View metadata, citation and similar papers at core.ac.uk

brought to you by CORE

provided by Missouri University of Science and Technology (Missouri S&T): Scholars' Mine

Missouri University of Science and Technology

Scholars' Mine

Mechanical and Aerospace Engineering Faculty Research & Creative Works

Mechanical and Aerospace Engineering

01 Jan 2009

Thermal Converter Devices, Systems and Control Methods

Richard A. Flanagan

Rod E. Hosilyk

Rob Arlt

Kakkattukuzhy M. Isaac
Missouri University of Science and Technology, isaac@mst.edu

et. al. For a complete list of authors, see https://scholarsmine.mst.edu/mec_aereng_facwork/772

Follow this and additional works at: https://scholarsmine.mst.edu/mec_aereng_facwork

Part of the Mechanical Engineering Commons

Recommended Citation

R. A. Flanagan et al., "Thermal Converter Devices, Systems and Control Methods," *U.S. Patents*, Jan 2009.

This Patent is brought to you for free and open access by Scholars' Mine. It has been accepted for inclusion in Mechanical and Aerospace Engineering Faculty Research & Creative Works by an authorized administrator of Scholars' Mine. This work is protected by U. S. Copyright Law. Unauthorized use including reproduction for redistribution requires the permission of the copyright holder. For more information, please contact scholarsmine@mst.edu.

US 20090249769A1

(19) **United States**

(12) **Patent Application Publication**

(10) **Pub. No.: US 2009/0249769 A1**

(43) **Pub. Date: Oct. 8, 2009**

Flanagan et al.

(54) **THERMAL CONVERTER DEVICES, SYSTEMS AND CONTROL METHODS**

(75) Inventors: **Richard A. Flanagan**, Reno, NV (US); **Rod E. Hosilyk**, Reno, NV (US); **Rob Arlt**, Reno, NV (US); **Kakkattukuzhy M. Isaac**, Roalla, MO (US); **Ronald E. Loving**, Reno, NV (US); **David Alan Gordon**, Washoe City, NV (US)

Correspondence Address:
KNOBBE MARTENS OLSON & BEAR LLP
2040 MAIN STREET, FOURTEENTH FLOOR
IRVINE, CA 92614 (US)

(73) Assignee: **UNIVERSAL CLEANAIR TECHNOLOGIES, INC**, Reno, NV (US)

(21) Appl. No.: **12/401,836**

(22) Filed: **Mar. 11, 2009**

Related U.S. Application Data

(60) Provisional application No. 61/042,665, filed on Apr. 4, 2008.

Publication Classification

(51) **Int. Cl.**
F01N 3/18 (2006.01)
F01N 3/26 (2006.01)

(52) **U.S. Cl.** **60/286**; 60/274

(57) **ABSTRACT**

A system is provided for reducing exhaust emissions. The system can comprise a series of chambers, an injector head, and a controller. The controller can maintain desired temperature zones and chemical environments inside the series of chambers, and the chambers and structures inside the system **10** can provide a desired travel path for the air, fuel, and untreated exhaust mixture inside.

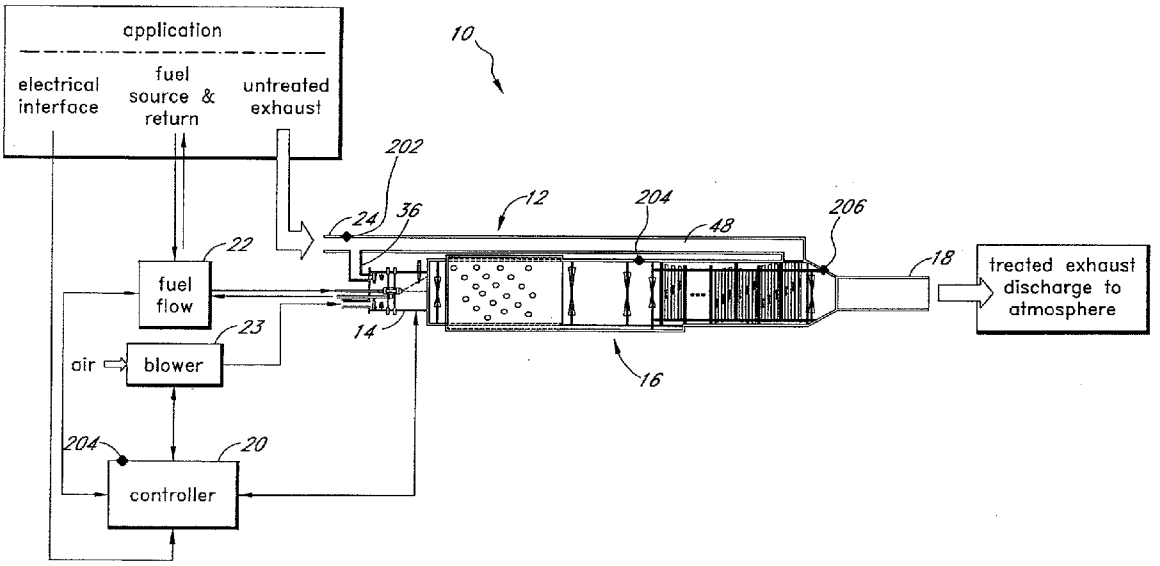

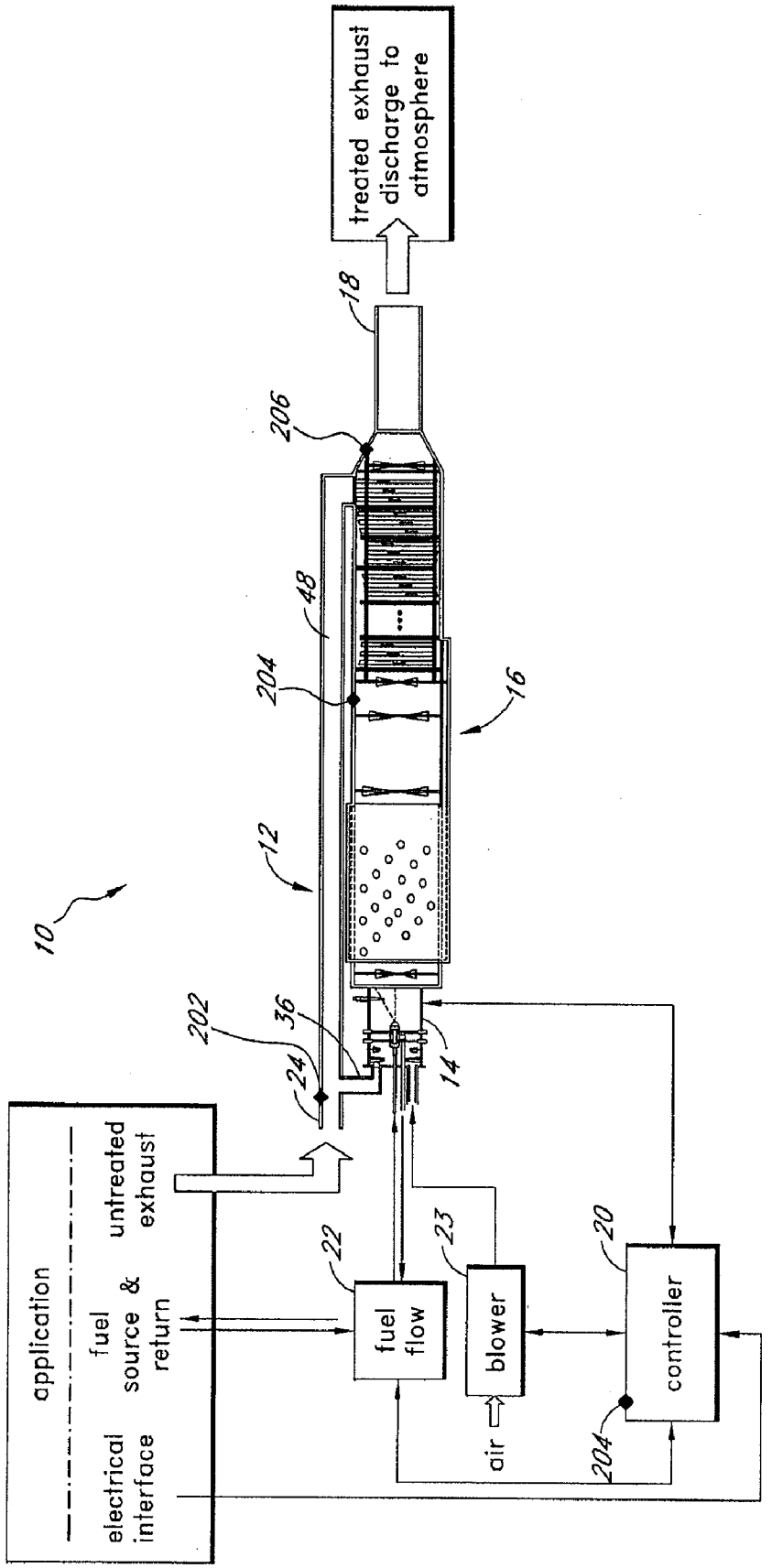
treated exhaust discharge to atmosphere
18
206
48
204
16
12
10
202
36
24
14
application
electrical interface
fuel source & return
untreated exhaust
22
fuel flow
23
blower
air
20
controller
204

FIG. 1

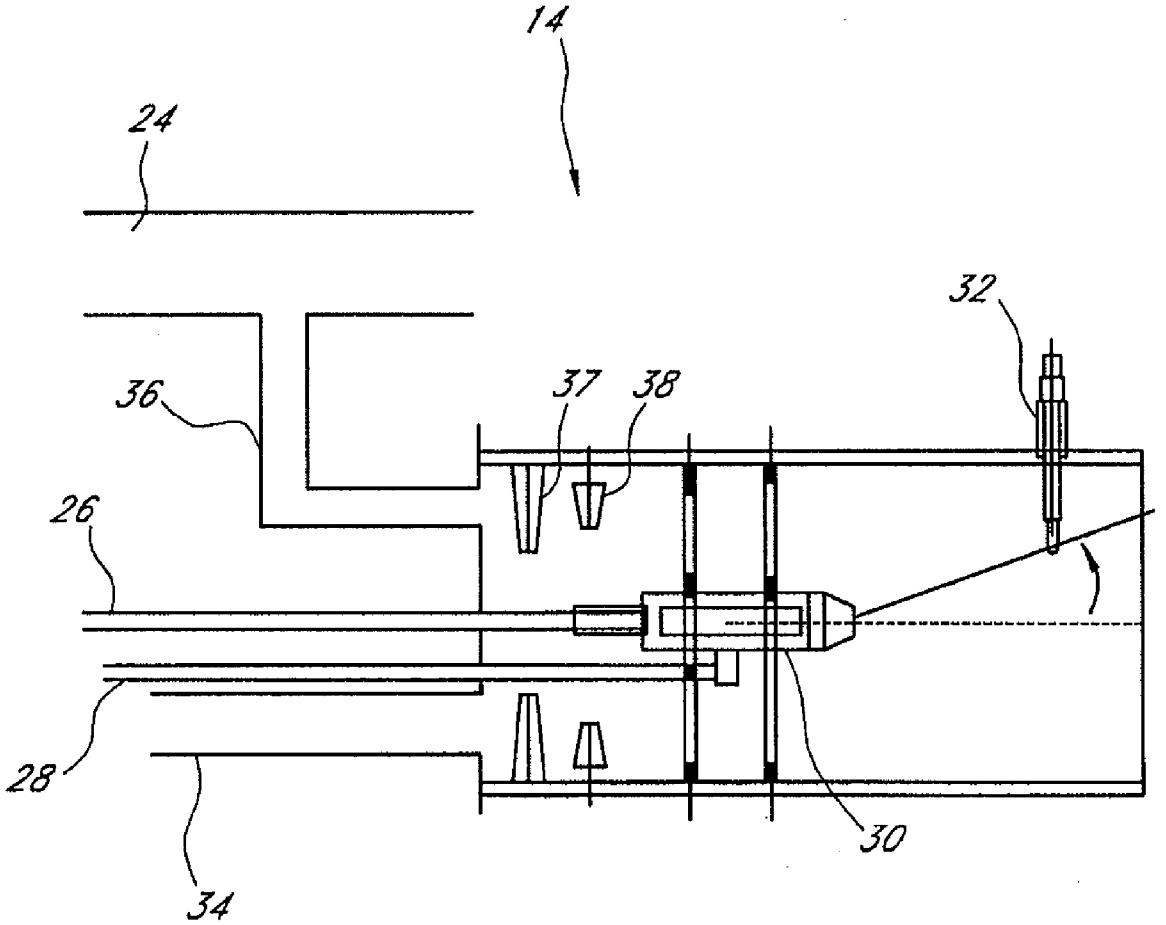

FIG. 2

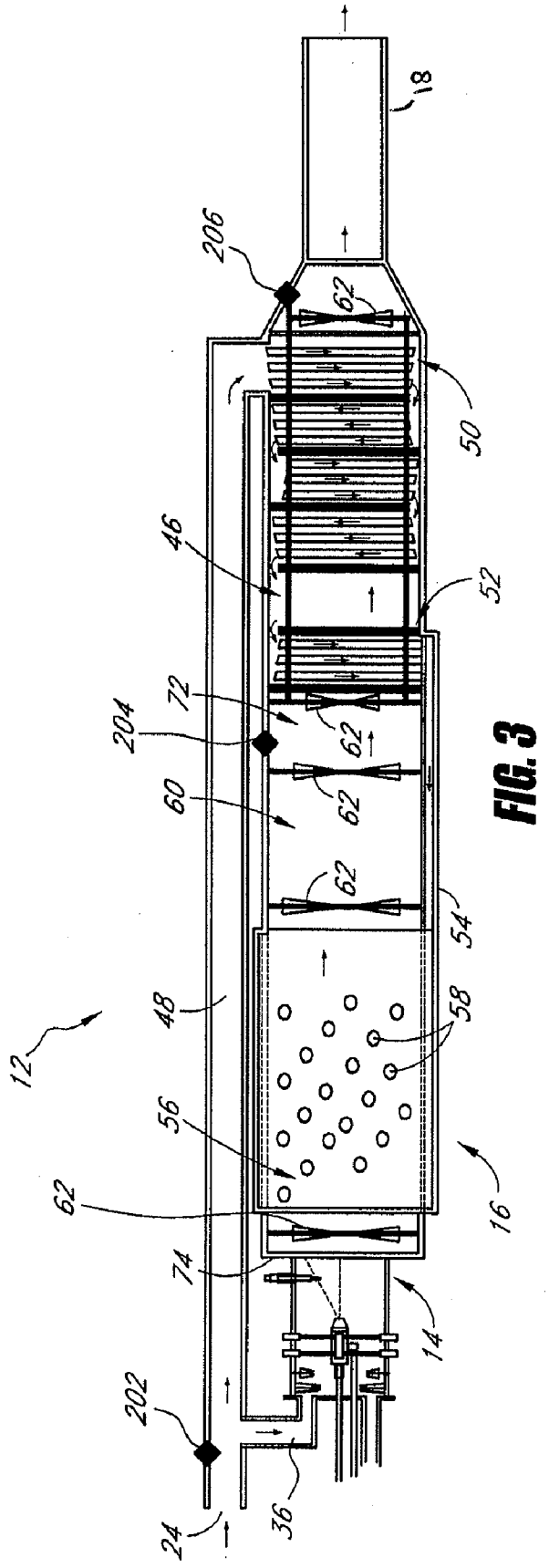
18
206
62
50
46
52
72
204
62
60
62
62
54
48
58
12
56
62
16
74
14
202
36
24

FIG. 3

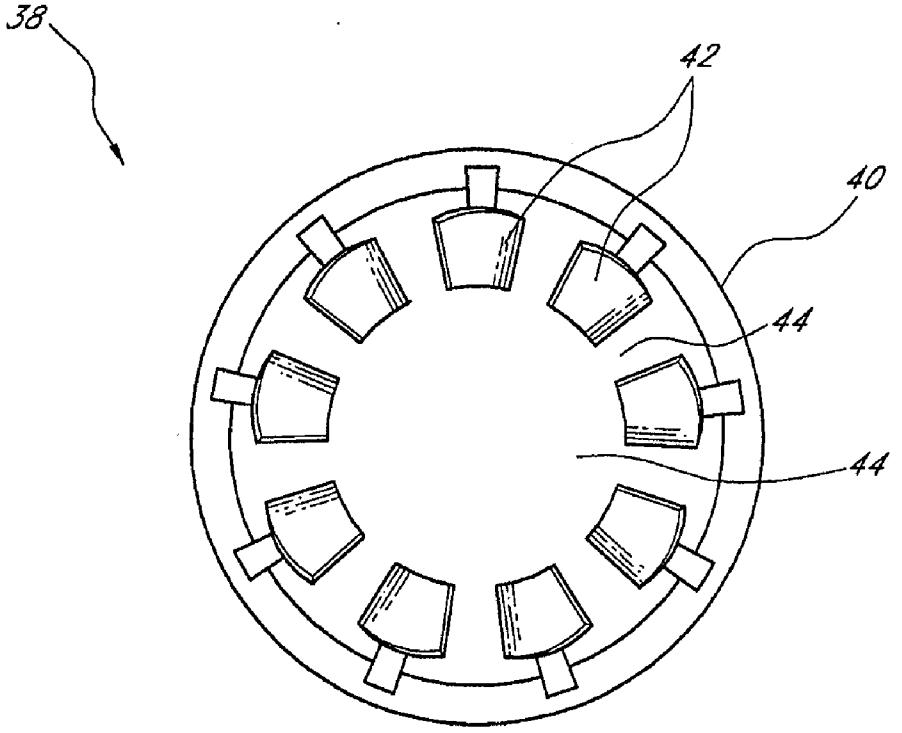

FIG. 4A

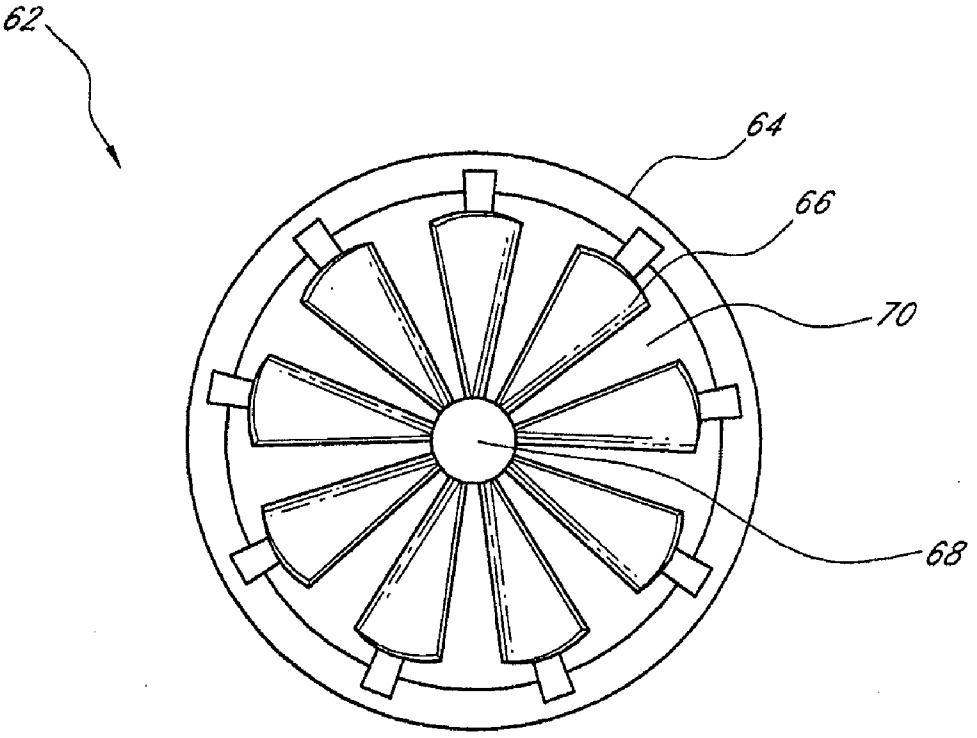

FIG. 4B

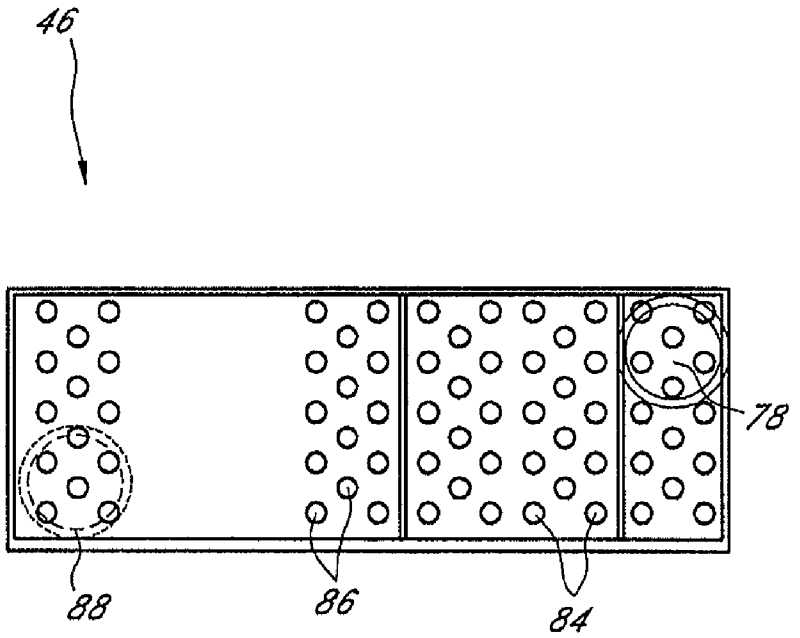

FIG. 5A

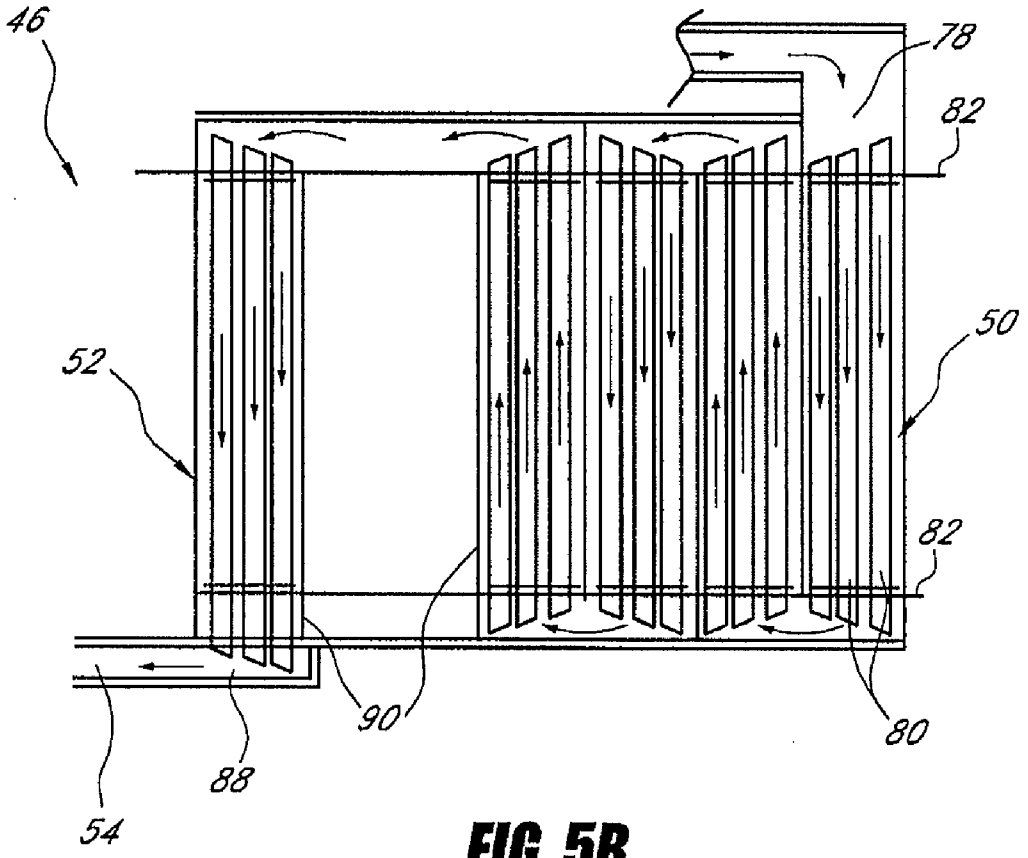

FIG. 5B

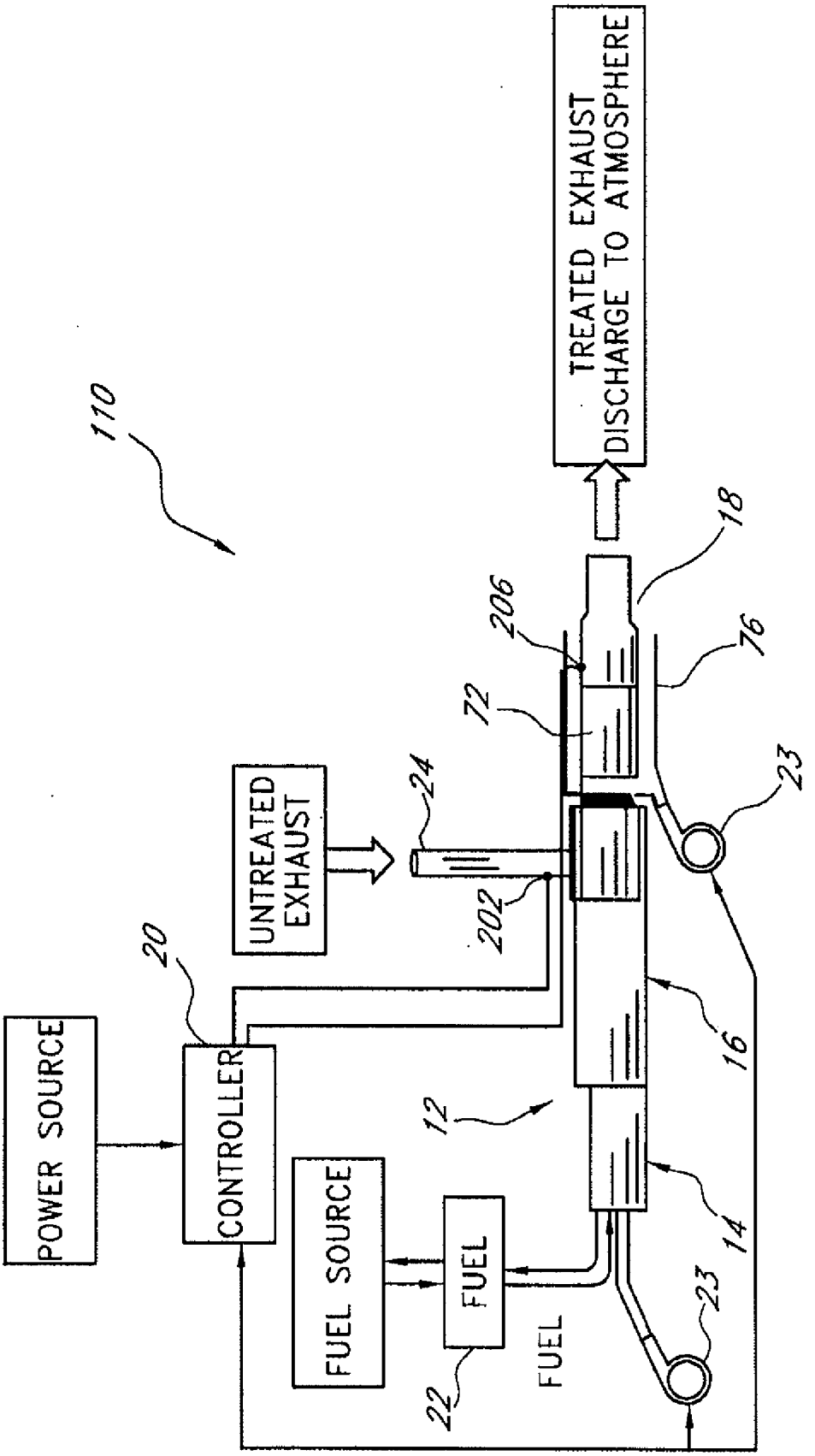
110
TREATED EXHAUST
DISCHARGE TO ATMOSPHERE
18
206
76
72
23
24
UNTREATED
EXHAUST
202
20
POWER SOURCE
CONTROLLER
12
16
FUEL SOURCE
FUEL
14
22
FUEL
23

FIG. 6

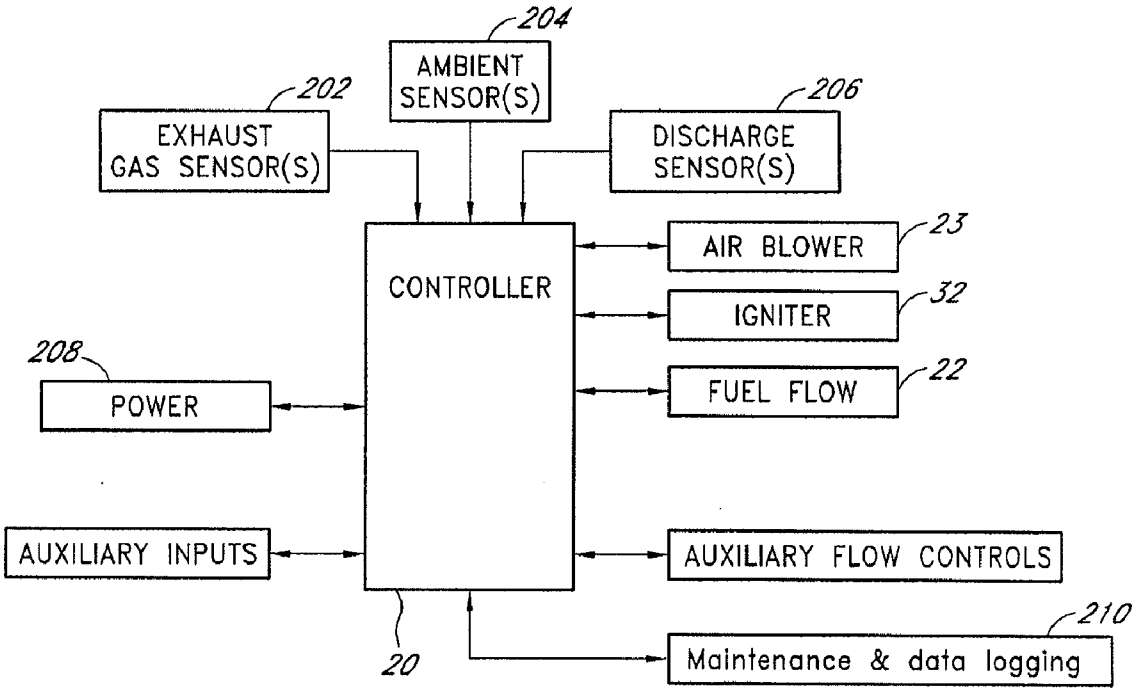
204
AMBIENT SENSOR(S)
202
EXHAUST GAS SENSOR(S)
206
DISCHARGE SENSOR(S)
CONTROLLER
AIR BLOWER
23
IGNITER
32
FUEL FLOW
22
208
POWER
AUXILIARY INPUTS
AUXILIARY FLOW CONTROLS
210
Maintenance & data logging
20

FIG. 7

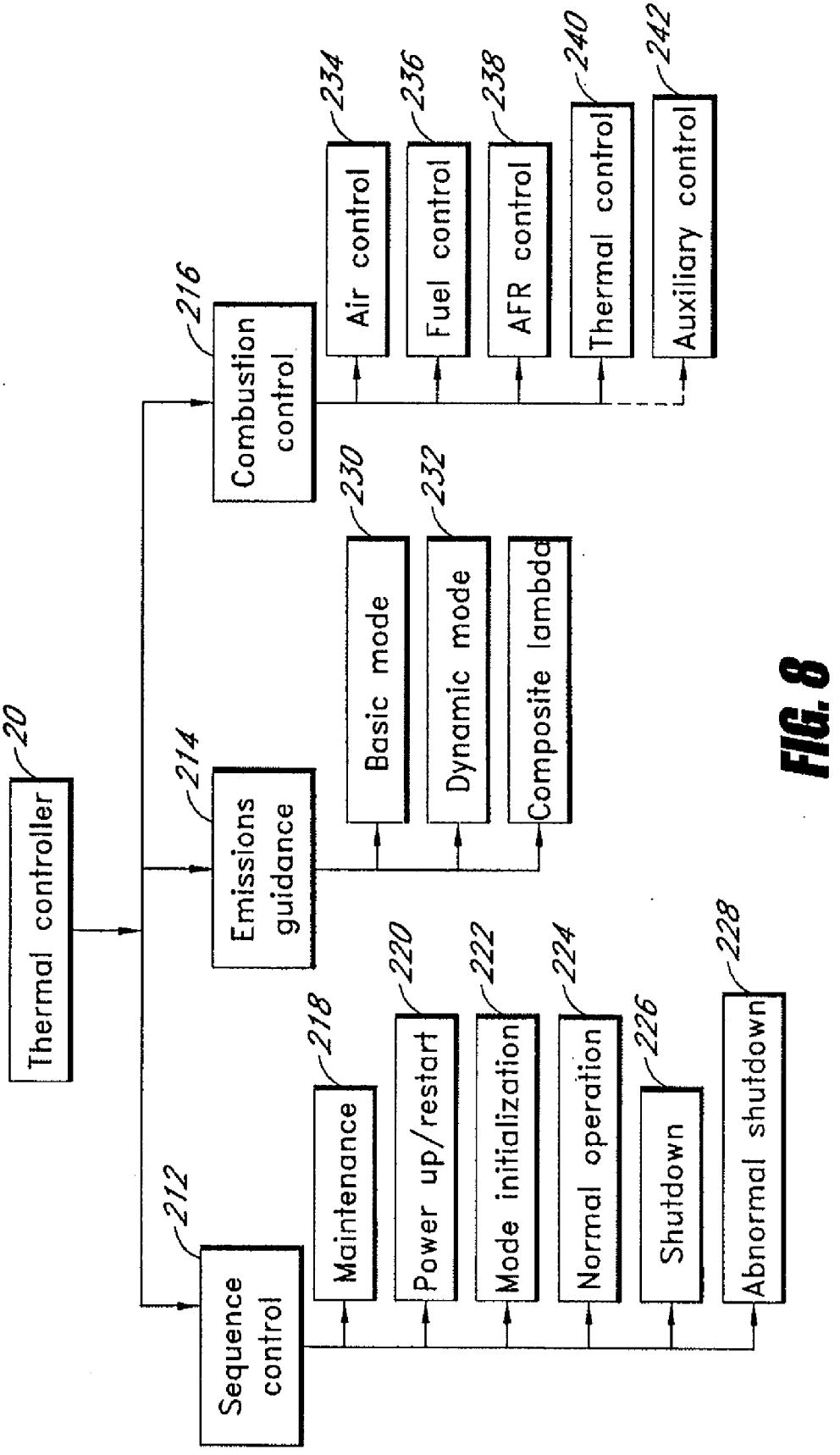
Thermal controller
20
Sequence control
212
Emissions guidance
214
Combustion control
216
Maintenance
218
Power up/restart
220
Mode initialization
222
Normal operation
224
Shutdown
226
Abnormal shutdown
228
Basic mode
230
Dynamic mode
232
Composite lambda
Air control
234
Fuel control
236
AFR control
238
Thermal control
240
Auxiliary control
242

FIG. 8

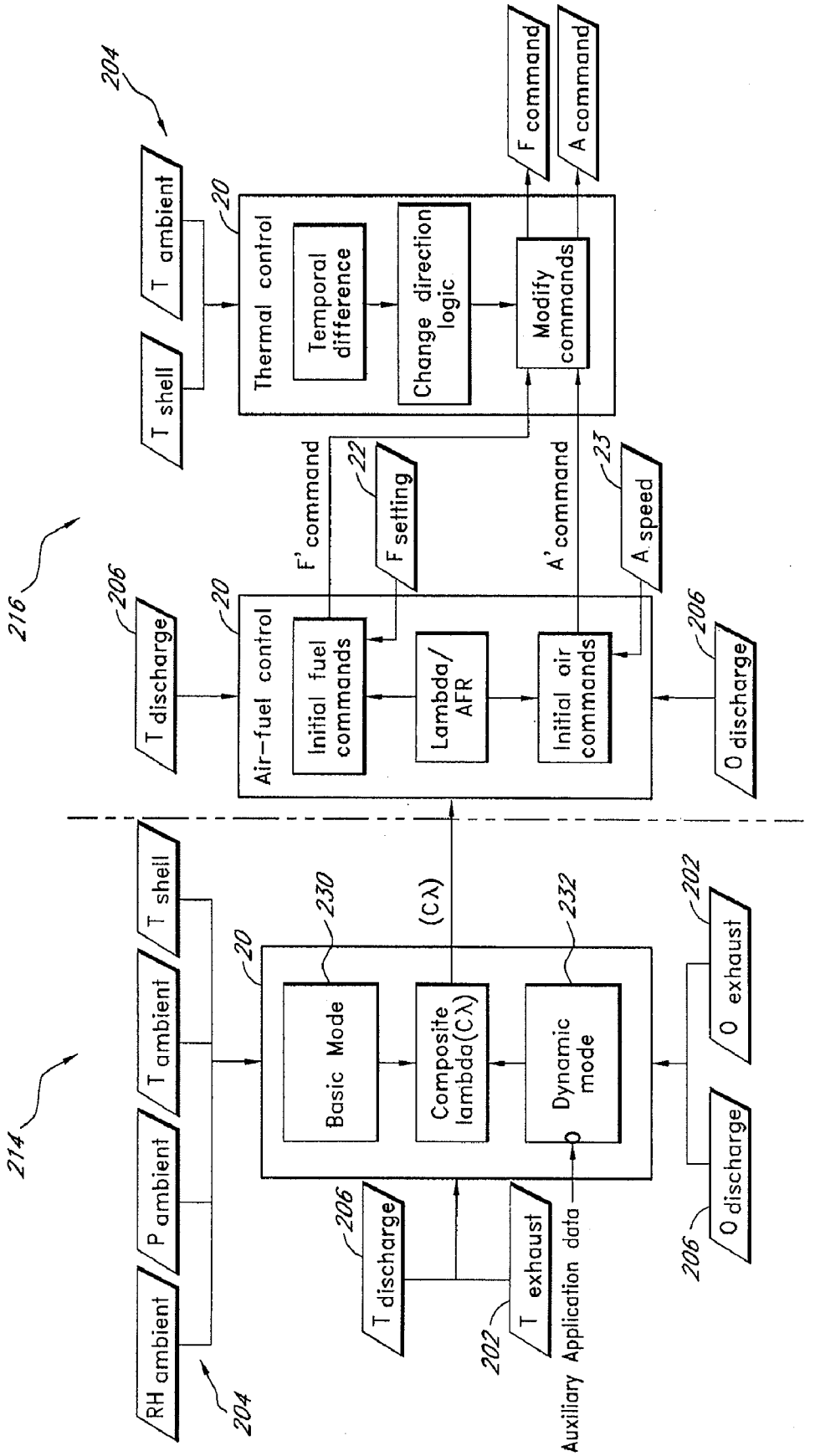
204
T shell
T ambient
20
Thermal control
Temporal difference
Change direction logic
Modify commands
F command
A command
216
206
T discharge
20
Air-fuel control
Initial fuel commands
Lambda/ AFR
Initial air commands
F' command
22
F setting
A' command
23
A speed
206
O discharge
214
RH ambient
P ambient
T ambient
T shell
204
20
Basic Mode
230
Composite lambda(Cλ)
(Cλ)
Dynamic mode
232
202
O exhaust
206
O discharge
206
T discharge
202
T exhaust
Auxiliary Application data

FIG. 9

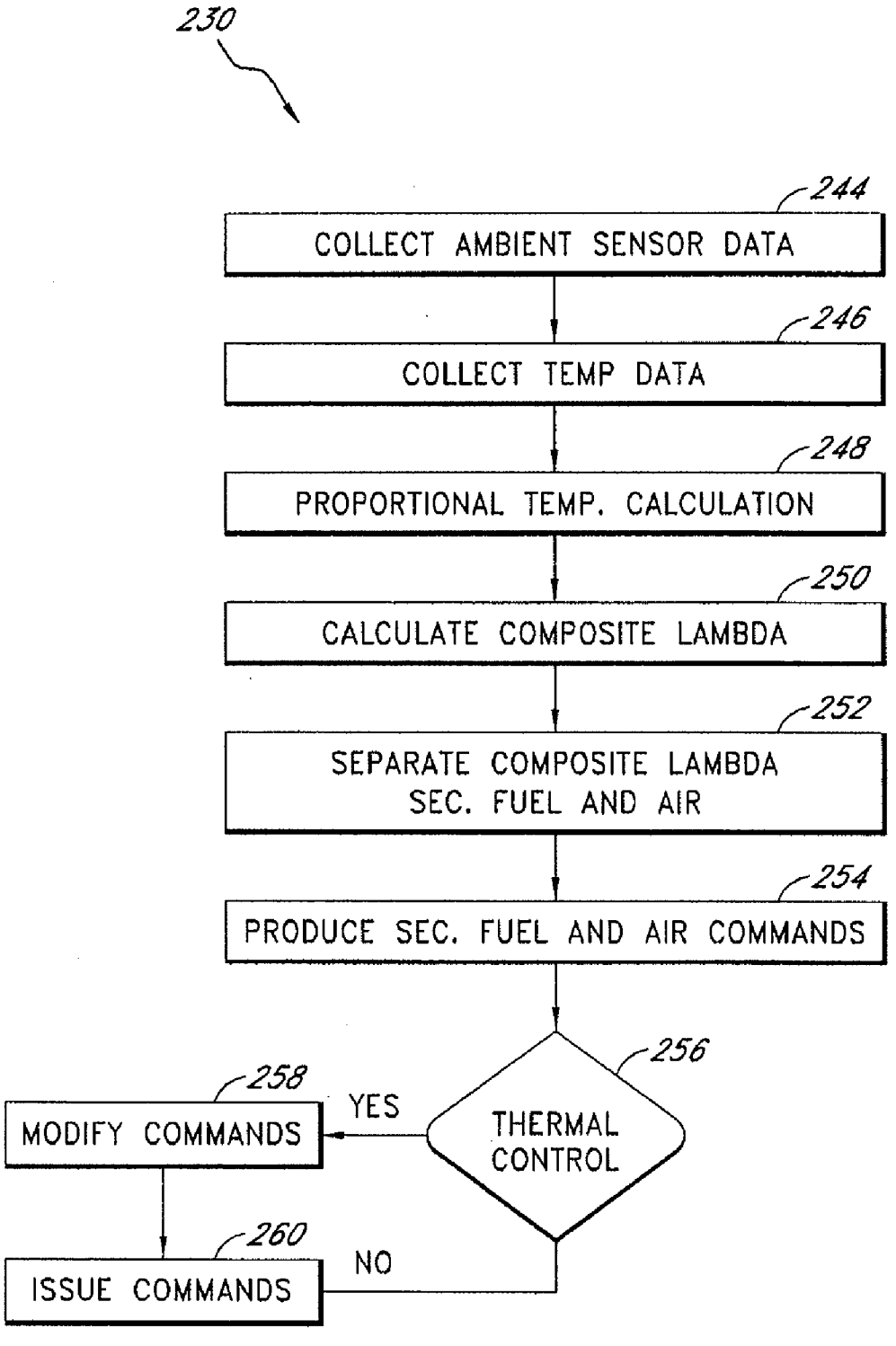
230
244
COLLECT AMBIENT SENSOR DATA
246
COLLECT TEMP DATA
248
PROPORTIONAL TEMP. CALCULATION
250
CALCULATE COMPOSITE LAMBDA
252
SEPARATE COMPOSITE LAMBDA SEC. FUEL AND AIR
254
PRODUCE SEC. FUEL AND AIR COMMANDS
256
THERMAL CONTROL
YES
258
MODIFY COMMANDS
NO
260
ISSUE COMMANDS

FIG. 10

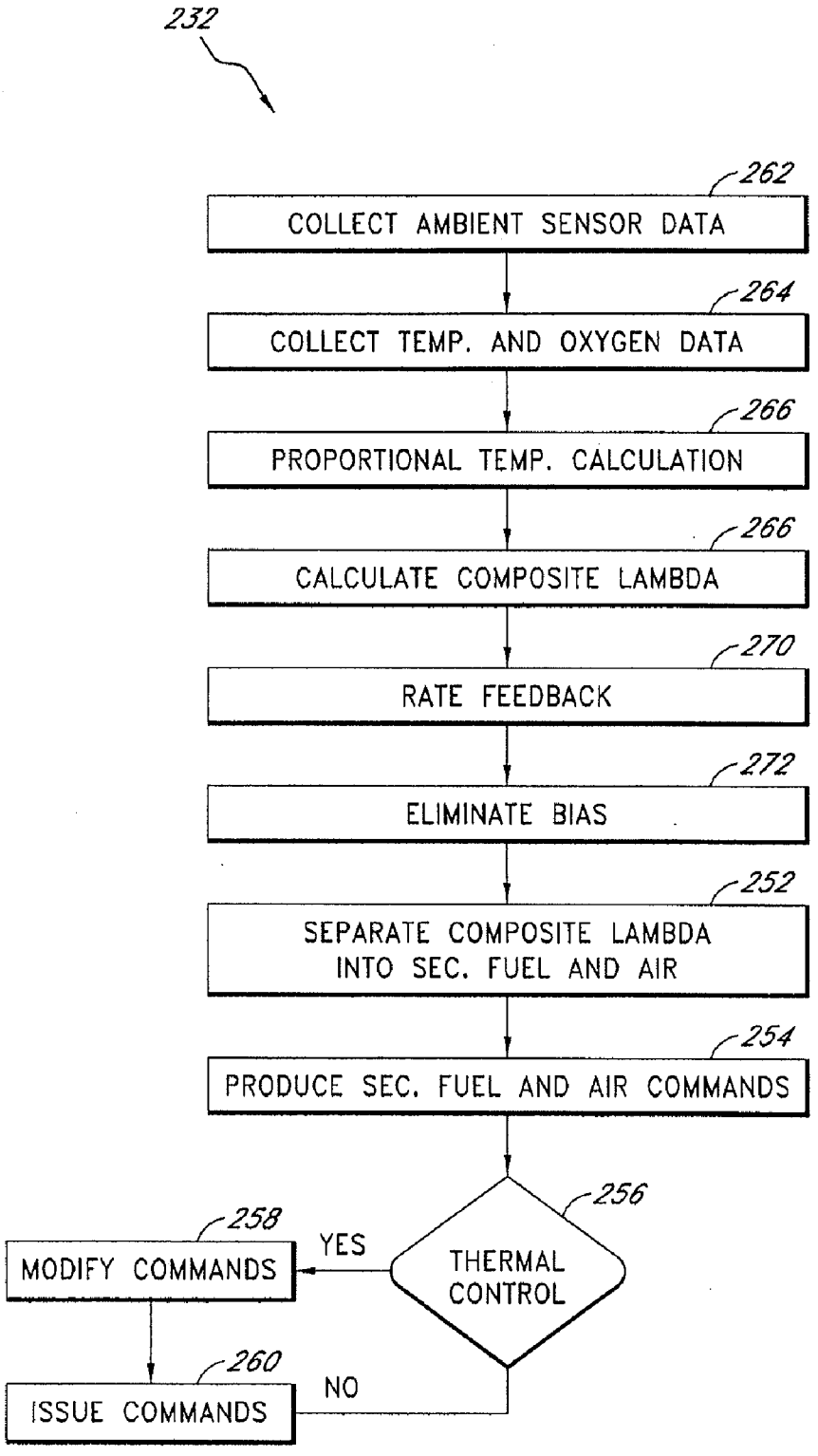
232
262
COLLECT AMBIENT SENSOR DATA
264
COLLECT TEMP. AND OXYGEN DATA
266
PROPORTIONAL TEMP. CALCULATION
266
CALCULATE COMPOSITE LAMBDA
270
RATE FEEDBACK
272
ELIMINATE BIAS
252
SEPARATE COMPOSITE LAMBDA INTO SEC. FUEL AND AIR
254
PRODUCE SEC. FUEL AND AIR COMMANDS
256
THERMAL CONTROL
YES
258
MODIFY COMMANDS
NO
260
ISSUE COMMANDS

FIG. 11

THERMAL CONVERTER DEVICES, SYSTEMS AND CONTROL METHODS

RELATED APPLICATIONS

[0001] This application claims benefit under 35 U.S.C. § 119(e) to U.S. Provisional Patent Application No. 61/042,665, filed Apr. 4, 2008, which is incorporated in its entirety by reference herein.

BACKGROUND OF THE INVENTIONS

[0002] 1. Field of the Inventions

[0003] The present application relates to emission reduction devices, systems, and control methods, and more particularly to devices, systems, and control methods for reducing exhaust emissions from a diesel engine.

[0004] 2. Background of the Inventions

[0005] The toxic release into the atmosphere of exhaust emissions from compression ignition ("diesel") engines is a global environmental problem and is prevalent in populated areas world-wide. Exhaust emission reduction of gases, solids, and condensates of diesel-powered systems have been the subject of both new and retrofit devices and methods.

[0006] An internal combustion engine burns hydrocarbon fuel (approximately 85% carbon and 15% hydrogen) in oxygen from incoming air (approximately 20% molecular oxygen and 78% molecular nitrogen). For diesel engines, the combustion process burns a mass ratio of air-to-fuel generally in a range of 19 under load to more than 40 at idle. This range is lean (fuel poor) to very lean since the stoichiometric mass (chemically balanced) air-to-fuel ratio is 14.7, stoichiometric being neither fuel rich nor fuel poor.

[0007] An engine exhaust flow generally consists of CO2, water, nitrogen, oxygen, and pollutants. These pollutants can be the result of undesirable high temperature and pressure combustion of nitrogen of the engine's incoming air (e.g. NOx) and the incomplete combustion of the hydrocarbon fuel including particulate matter (PM), i.e. soot, unburnt and partial hydrocarbons (HC), and carbon monoxide (CO). NOx is a general term usually denoting nitric oxide (NO) and nitrogen dioxide (NO2). The emission control strategy for automobiles with a spark ignition engine ("gasoline engine") generally uses an after treatment device called a three way catalytic converter (TWC) that includes a sensor ("lambda sensor") that measures oxygen in the exhaust stream relative to ambient levels. The lambda sensor can provide a feedback to the engine fuel control system in order to maintain a stoichiometric air-fuel ratio. Lambda can refer to the actual air-fuel ratio divided by the stoichiometric air-fuel ratio. The TWC uses two catalysts for oxidizing CO and HC and a third catalyst for converting NOx to molecular nitrogen (N_2). However for the three catalysts to function properly, the gasoline engine is required to run the combustion process at stoichiometric, that is, the air-fuel ratio must be neither rich nor lean in fuel (lambda equal to 1)

[0008] Diesel engine exhaust emissions species are different than gasoline engine emissions. For example, diesel engine exhaust emissions include more air (N_2 and O_2) and PM. Gasoline-fueled spark ignition engines generally have very little PM emissions compared to diesel engines. Diesel engines are always operated lean, and therefore can not use the same emissions control strategy as used in the automobile exhaust system, especially the NOx catalyst due to the high oxygen content of the exhaust. Some diesel emission reduction methods use a filter to trap and collect the PM (e.g. soot). The accumulated soot can build up to the point of clogging the exhaust system, ultimately resulting in damage to the engine. The filter must be either routinely replaced or cleaned (often referred to as regeneration) to burn out the soot accumulation before the system can be used again without damage to the engine.

[0009] The diesel engine emissions of PM and NOx released into the atmosphere are especially a public health problem. Current methods and devices process a subset of pollutants, and require multiple bulky devices to be installed. Devices and methods that have been explored are diesel oxidation catalyst (DOC), injection of fuel-borne catalysts, engine gas recirculation (EGR), selective catalytic reduction (SCR), as well as diesel particulate filters (DPF). DPF are commonly used to reduce PM since the efficiency of the filter is good over a range of particle sizes (10 nm to 500 nm). A DPF can be fitted to new engines as well as retrofitted to existing engines, provided that the DPF does not increase engine exhaust backpressure beyond certain limits.

[0010] Practical DPFs have a filter medium consisting of a porous material in a wall-flow structure such as a ceramic honeycomb whereby alternate cell ends are closed requiring the flow through the fine microporous walls. Other surface-rich media may be sinter filters that are formed as a bag or bellow structures. Yet other types are fiber filters and filter papers similar to inlet air filters. A consequence of DPF, however, is that the build-up of accumulated PM and ash ("soot loading") can impact the engine as increased back-pressure. Increasing back-pressure can rob the engine of power, increasing fuel usage and ultimately damaging the engine. Additionally, the DPF can trap PM but can not provide reductions of gases of CO and NOx. To reduce CO and NOx requires more devices such as DOC to reduce CO and THC, and SCR to reduce NOx.

[0011] Only a few technologies such as EGR and SCR have attacked the NOx problem, with limited operational success. EGR feeds back cooler exhaust into the hotter combustion to reduce NOx, causing lower temperatures in the cylinders. Contamination within the engine has resulted in fewer EGR devices. SCR requires the introduction of urea or ammonia as a reductant in its chamber to chemically process the NOx. SCR requires an infrastructure to support normal operation. For diesel-powered transportation equipment SCR has a number of problems. The infrastructure to replace and maintain this in the field is enormous. In addition, another device (e.g. filter) must be included in the output, since during the reduction process some of the ammonia can "slip" out into the atmosphere.

[0012] Thermal afterburning has been used as a cogeneration process for boilers and was tried as an after treatment device to reduce hydrocarbon emissions by completing the combustion process. Emissions control of pollutants such as PM, CO and HC can be burnt to completion, producing CO2 and H2O, but as the temperature is increased to promote burning, some of the molecular nitrogen in the air is converted to NOx (e.g. NO and NO2). In the past, thermal afterburning was tried as an emission control device to increase the specific residence time at high temperatures for combusting to completion the exhaust gas constituents, but as described above, this failed to reduce NOx and therefore has had limited utility.

SUMMARY OF THE INVENTIONS

[0013] In engine applications, including but not limited to those of trucks, construction equipment, stationary genera-

tors, railroad locomotives, and marine vessels, exhaust emissions can consist of harmful pollutants such as nitric oxides (NOx), PM, CO, and HC. As described above, diesel engines cannot use catalytic converters to eliminate some or all of these pollutants, and current technology does not efficiently and accurately address the problems associated with emissions in such engines. In particular, current technology does provide for an efficient way to convert and/or burn PM, CO, and HC to carbon dioxide and water, while at the same time reducing nitric oxides in the exhaust. Therefore, an aspect of at least one of the embodiments disclosed here includes the realization that it would be advantageous to have a single system, capable of use with new engines or of retrofitting on old engines, including but not limited to diesel engines, which can efficiently reduce and/or eliminate the harmful pollutants described above.

[0014] Thus, in accordance with at least one embodiment, a system for reducing engine exhaust gas pollutants can comprise a tube assembly comprising an injector head, a plurality of chambers, at least one of the chambers coupled to the injector head, and the plurality of chambers further comprising at least one component for directing a flow of mixture inside the tube assembly. The tube assembly can further comprise a discharge exhaust pipe coupled to one of the chambers, a heat exchanger coupled to the plurality of chambers, and an untreated exhaust inlet coupled to the heat exchanger. The system can further comprise a fuel flow device coupled to the injector head, an air device coupled to the injector head, and a controller configured to communicate with the fuel device, the air device, and the injector head.

[0015] Thus, in accordance with at least another embodiment, a device for reducing exhaust emission pollutants through combustion processes that burn hydrocarbon fuel in the presence of air can comprise a plurality of chambers in communication with an engine exhaust source and a discharge pipe, the plurality of chambers comprising components configured to manipulate an exhaust flow inside the chambers and form timed heated chemical environments for the combustion of chemical pollutants.

[0016] Thus, in accordance with at least another embodiment, a method of reducing exhaust gas pollutants in an engine's exhaust can comprise providing an assembly comprising an injector head, a plurality of chambers, at least one of the chambers connected to the injector head, the plurality of chambers comprising at least one component for directing a mixture of flows inside the tube assembly, a discharge exhaust pipe connected to one of the chambers, a heat exchanger connected to the plurality of chambers, an untreated exhaust inlet connected to at least one of the heat exchanger and injector head, and a controller in communication with the injector head. The method can further comprise directing untreated exhaust from the engine to at least one of the injector head and heat exchanger, directing secondary fuel and secondary air into the injector head, igniting the secondary fuel, directing the ignited secondary fuel and secondary air into the plurality of chambers, directing the untreated exhaust from at least one of the injector head and heat exchanger into the plurality of chambers to form the flow of mixture inside the tube assembly, treating the untreated exhaust by combusting pollutants in the flow of mixture in the plurality of chambers, cooling the mixture of flow in the plurality of chambers to reduce nitric oxides mixture of flow, and discharging the mixture of flow out the discharge exhaust pipe.

[0017] Thus, in accordance with yet another embodiment, a basic control method for controlling secondary fuel and secondary air sources in a system which reduces engine exhaust gas pollutants can comprise providing an assembly comprising an injector head, a plurality of chambers connected to the injector head and a discharge exhaust pipe, an untreated exhaust inlet connected to the plurality of chambers, a controller in communication with the injector head, at least one ambient sensor, and at least one temperature sensor adjacent the exhaust inlet and at least one temperature sensor adjacent the discharge exhaust pipe. The method can further comprise collecting temperature, humidity, and pressure data from the at least one ambient sensor and at least one temperature sensors, comparing the obtained temperature data with predetermined values of temperature set points in the controller, and based on the set points, determining a temperature error, calculating a desired composite lambda, the composite lambda representing a total air and fuel ratio inside the plurality of chambers, separating the desired composite lambda and producing secondary fuel and secondary air commands which direct secondary fuel and secondary air into the plurality of chambers to be mixed with untreated exhaust, and monitoring the discharge temperature of the mixture at the discharge pipe and modifying the secondary fuel and secondary air commands.

[0018] Thus, in accordance with yet another embodiment, a dynamic control method for controlling secondary fuel and secondary air sources in a system which reduces engine exhaust gas pollutants can comprise providing an assembly comprising an injector head, a plurality of chambers connected to the injector head and a discharge exhaust pipe, an untreated exhaust inlet connected to the plurality of chambers, a controller in communication with the injector head, at least one ambient sensor, and at least one temperature sensor adjacent the exhaust inlet and at least one temperature sensor adjacent the discharge exhaust pipe. The method can further comprise collecting temperature, humidity, and pressure data from the at least one ambient sensor and at least one temperature sensors, comparing the obtained temperature data with a pre-loaded table of temperature set points in the controller, and based on the set points, determining a temperature error, calculating a desired composite lambda, the composite lambda representing a total fuel and air ratio inside the assembly, adjusting the rate of rise and fall for the desired composite lambda in order to minimize potential overshoot or undershoot of a desired discharge temperature at the discharge exhaust pipe, adjusting the desired composite lambda to compensate for steady-state errors, separating the desired composite lambda and producing secondary fuel and secondary air commands which direct secondary fuel and secondary air into the plurality of chambers to be mixed with untreated exhaust, and monitoring the discharge temperature and modifying the secondary fuel and secondary air commands.

BRIEF DESCRIPTION OF THE DRAWINGS

[0019] These and other features and advantages of the present embodiments will become more apparent upon reading the following detailed description and with reference to the accompanying drawings of the embodiments, in which:

[0020] FIG. **1** is a schematic illustration of an embodiment of a thermal converter system.

[0021] FIG. **2** is a schematic illustration of an embodiment of an injector head of the system of FIG. **1**.

[0022] FIG. **3** is a schematic illustration of an embodiment of a converter tube assembly of the system of FIG. **1**.

[0023] FIG. **4***a* is a front elevational view of an embodiment of a helical stator used in the injector head.

[0024] FIG. **4***b* is a front elevational view of an embodiment of a helical stator used in the converter tube assembly.

[0025] FIG. **5***a* is a schematic top view of an embodiment of a heat exchanger of the system of FIG. **1**.

[0026] FIG. **5***b* is a schematic side view of the heat exchanger of FIG. **5***a*.

[0027] FIG. **6** is a schematic illustration of another embodiment of a thermal converter system.

[0028] FIG. **7** is a schematic illustration of an embodiment of thermal controller interface.

[0029] FIG. **8** is a flow chart of an embodiment of controller functions.

[0030] FIG. **9** is a flow chart of an embodiment of emissions guidance and combustion control.

[0031] FIG. **10** is a flow chart of an embodiment of a basic control mode for the controller.

[0032] FIG. **11** is a flow chart of an embodiment of a dynamic control mode for the controller.

DETAILED DESCRIPTION OF THE PREFERRED EMBODIMENT

Thermal Converter System

[0033] With reference to FIG. **1**, an embodiment of a thermal converter system **10** can include a tube assembly **12**. The tube assembly **12** can comprise an injector head **14**, an assembly **16** of connected chambers and/or passageways, and an exhaust pipe **18**. The tube assembly **12** can further comprise insulation material, an outer shell, and/or mounting hardware, which are not shown. In some embodiments, the tube assembly **12**, or parts of the tube assembly **12**, can comprise a right-circular long metal tube.

[0034] The system **10** can further include a thermal controller **20**, fuel device **22**, and air device **23**, each of which can be in communication with and/or connected to the tube assembly **12**. In some embodiments, the fuel device **22** can comprise a fuel flow rate controller. In some embodiments, the air device **23** can comprise an air blower or blowers. The system **10** described herein can be used, for example, to treat untreated exhaust gas which exits from an engine, and to reduce emissions of harmful pollutants such as particulate matter (PM) and oxides of nitrogen (NOx) in the exhaust gas.

[0035] With continued reference to FIG. **1**, untreated exhaust from an engine (e.g. diesel engine) can be directed into the converter tube assembly **12** through an untreated exhaust inlet **24**. The untreated exhaust can first be heated to an elevated temperature inside the tube assembly **12**, and then mixed with a burning secondary air and fuel mixture inside the converter tube assembly **12**. The burning secondary air and fuel mixture inside the tube assembly **12** can be a combination of secondary air and secondary fuel directed into the tube assembly **12** by the fuel device **22** and air device **23**, and ignited inside the injector head **14**. In some embodiments, the secondary fuel can come from the same fuel source that is powering the engine. In other embodiments, the secondary fuel can be derived from an entirely separate source.

[0036] With continued reference to FIG. **1**, the controller **20** can be powered by a power source and/or electrical interface, and can be in communication with the fuel device **22**, air device **23**, and injector head **14**. The fuel device **22** can control the amount of secondary fuel that enters the injector head **14** of tube assembly **12**, and can have a fuel source and return line or lines. The air device **23** can control the amount of secondary air that enters the injector head **14** of tube assembly **12**, and can have an air source. For example, once the thermal controller **20** determines the amount of secondary air and fuel to be delivered by the fuel device **22** and air device **23**, secondary air and fuel can be delivered to the injector head **14**, and the mixture can be ignited.

[0037] Adding a burning secondary fuel and air mixture to an untreated heated exhaust inside the tube assembly **12** can facilitate completion of chemical conversion processes inside the tube assembly **12**, and reduce the amount of pollutants that exit through the exhaust pipe **18**. Such pollutants can include, but are not limited to, NOx by-products, unburned compounds including paraffinic, naphthenic, and aromatic hydrocarbons, partially-burned combustion products of carbon monoxide and hydrocarbons including aldehydes and keytones, and thermal decomposition products including particulate matter (i.e. elemental and organic carbon, and polycyclic hydrocarbons).

[0038] With reference to FIGS. **1** and **2**, the injector head **14** can include a fuel supply inlet **26** and fuel return outlet **28**. Secondary fuel exiting the fuel device **22** can enter the injector head **14** through the fuel supply inlet **26**, and can then enter a fuel nozzle **30**, which can be bracketed in place inside the injector head **14**. The nozzle **30** can be a pressure feed nozzle which has a high pressure side at constant pressure and a return side which allows secondary fuel to be returned back to the fuel device **22** via the fuel return outlet **28**. The nozzle **30** can provide a fine spray pattern of secondary fuel as the secondary fuel is mixed with secondary air under pressure. The fuel nozzle **30** can spray the secondary fuel towards an igniter **32**, and unused secondary fuel can return from the fuel nozzle **30** to the fuel device **22** via the return outlet **28**. Other embodiments may provide spray patterns using other nozzle arrangements such as an air atomizing nozzle and/or multiple nozzle configurations.

[0039] With continued reference to FIGS. **1** and **2**, the injector head **14** can also include an air supply inlet **34**. Secondary air exiting the air device **23** can enter injector head **14** via air inlet **34**. The secondary air can mix with the secondary fuel spray, and the mixture can ignite under the igniter **32**.

[0040] With continued reference to FIGS. **1** and **2**, the injector head **14** can also include an engine exhaust tap and inlet **36**. In some embodiments, a portion of the untreated exhaust from inlet **24** can be directed through the exhaust tap and inlet **36**. The untreated exhaust entering the injector head **14** through inlet **36** can be mixed with the secondary fuel and secondary air, and ignited under the igniter **32**.

[0041] With reference to FIGS. **1**, **2**, and **4**A, the injector head **14** can include an air/exhaust deflector **37** and/or a helical stator **38**. The air/exhaust deflector **37** can be shaped so as to deflect incoming air and untreated exhaust in a desired direction through the injector head **14**, as can the helical stator **38**.

[0042] With reference to FIG. **4**A, the helical stator **38** can have a solid rim dam **40**, solid angled vanes **42**, and vane openings **44**. The helical stator **38** can be positioned inside the injector head **14** such that it facilitates rotation of any air, fuel, and/or exhaust moving through the injector head **14**. In some embodiments, the helical stator **38** can have no moving parts. An opening **44** in the central portion of the helical stator **38**

can provide room for the fuel supply inlet **26** and fuel return outlet **28**, as shown in FIG. **2**. Other sizes, shapes, and configurations of stator **38** can also be used.

[0043] As the swirling mixture of secondary fuel, secondary air, and/or exhaust begins to rotate due to the helical stator **38**, the mixture can be ignited by the igniter **32** in injector head **14**, and start to burn. In at least one embodiment, the igniter **32** can be activated by the controller **20** until a flame detector detects heat, at which point the igniter **32** can be shut off. As the mixture of secondary fuel, air, and/or exhaust begins to burn, the mixture can be directed into the chambers of assembly **16**.

[0044] With continued reference to FIG. **2**, the length and diameter of the injector head **14** can vary. For example, in at least one embodiment, the length and diameter can be determined by the system **10**'s maximum exhaust mass flow rate. In at least one embodiment, the injector head **14** can be an elongated right-circular metal tube. Other sizes, shapes, and configurations are also possible.

[0045] With reference to FIG. **3**, and as described above, the tube assembly **12** can comprise an untreated exhaust inlet **24**. The incoming flow of untreated exhaust can be split, such that a first portion is directed to the injector head **14** through **36** as described above, and a second portion is directed to a heat exchanger **46** located in the assembly **16**. In at least one embodiment, the diameter of the untreated exhaust inlet **24** can be sized based on the diameter of the exhaust pipe **18**, and the maximum exhaust volumetric flow rate. In at least one embodiment, 20% of the untreated exhaust from inlet **24** can be directed to the injector head **14**, and 80% to the heat exchanger **46**. Other percentages are also possible.

[0046] With continued reference to FIG. **3**, the second portion of the untreated exhaust can flow down a passageway **48** towards the heat exchanger **46**. In at least one embodiment, the heat exchanger **46** can comprise a series of tube packets, including at least one catalyst coated heat exchanger tube packet **50**. The flow of untreated exhaust can move through tubes in the tube packet **50** (see arrows in FIG. **3**) and continue out the bottom of the packet **50** into another packet in a series of tube packets. The flow of untreated exhaust can continue through this series of packets until it reaches, for example, an uncoated tube packet **52**. As the untreated exhaust exits uncoated tube packet **52**, it can flow into a passageway of a pre-heat jacket **54**. The pre-heat jacket **54** can comprise any type of structure which provides a pathway for the exiting untreated exhaust from the heat exchanger **46** to a mixing chamber **56** in the assembly **16**. As illustrated in FIG. **3**, the untreated exhaust can move through the pre-heat jacket down assembly **16** and enter the mixing chamber **56**.

[0047] With continued reference to FIG. **3**, the inner shell of mixing chamber **56** can have a pattern of openings **58** which allow the flow of untreated exhaust in the pre-heat jacket to enter the inside of mixing chamber **56**. For example, the mixing chamber **56** can comprise a plurality of openings on an inner shell, and an outer shell which forms a passageway to the openings. In at least one embodiment the openings **58** are round holes. Other embodiments can entail slots of various lengths to facilitate and/or force a particular flow direction or pattern into the mixing chamber **56**. In some embodiments, the shape, size, and number of the openings **58** can vary. In some embodiments, the mixing chamber **56** can be a right-circular metal tube. In some embodiments, the mixing chamber **56** can include an inlet from the injector head **14** which has a diameter sized based on the exhaust pipe **18** diameter, maximum exhaust volumetric flow rate, and/or allowable backpressure in the system **10**.

[0048] Once inside mixing chamber **56**, the rotating, burning, secondary fuel, secondary air, and/or untreated exhaust mixture arriving from injector head **14** can be mixed in a turbulent fashion with the untreated exhaust entering through holes **58**. The untreated exhaust can be diluted inside the mixing chamber **56**, and the flow velocity and turbulence on the inside of mixing chamber **56** can thoroughly mix the constituents.

[0049] The mixing chamber's length-to-diameter ratio can be kept on the order of one so that any gas film conductance is overridden by turbulence, enhancing heat transfer to the incoming untreated exhaust. In some embodiments the mixing chamber **56** is connected to the injector head **14**, and the length-to-diameter ratio of an inner tube (e.g. shell) of the mixing chamber is less than three. The mixing chamber's diameter and internal overall flow resistance can also be sized to maintain a back pressure that substantially matches the operating characteristics of the particular engine and/or application the system **10** is working on at the time.

[0050] With reference to FIGS. **3** and **4***b*, as the turbulent mixture of secondary fuel, secondary air, and untreated exhaust moves through the mixing chamber **56** and into a combustion chamber **60**, the mixture can encounter at least one of a second type of helical stator **62**. The helical stator **62** can have a different configuration from that of helical stator **38** described above. For example, the helical stator **62** can comprise a thin disk with an outer solid rim dam **64**. The disk can have a diameter equal to the diameter of the chamber wall in the combustion chamber **60**. The helical stator **62** can have a number of solid angled vanes **66** along equally spaced radials that extend from a small solid center stop **68** to the rim dam **64**. The helical stator **62** can allow translating flow to pass through vane openings **70** while still imparting a rotational component to the traveling mixture as it flows over the vane surfaces. The helical stator **62** can have no moving parts. Other sizes, shapes, and configurations for the helical stator **62** are also possible.

[0051] In some embodiments, the combustion chamber **60** can have a diameter and length compatible with the mixing chamber **56**. As solids in the mixture burn in the combustion chamber **60**, the releasing gases can find their way out through the helical stator's vane openings **70**, and move further along in the assembly **16**. Within the combustion chamber **60**, the mixture of secondary fuel, secondary air, and untreated exhaust can combust at high temperatures, and a majority of the remaining chemical energy of the mixture can be released, oxidizing some compounds in the mixture, but increasing NOx formation. The helical and rotational motion of the mixture caused by the stators **38** and **62** can create a coil-like pattern as the mixture travels downstream through the combustion chamber **60**.

[0052] The centrifugal effect of this turbulent mixture rotation in the combustion chamber **60** can cause the more massive constituents in the turbulent mixture to be thrown towards the chamber wall. Since the heavier particles have a translating component, the heavier particles can hit the rim dams **64** of helical stators **62**. The helical stator rim dams **64** can deflect the passage of these particles in the turbulent mixture, increasing their dwell time within the combustion chamber **60**. Thus, the turbulence induced by the helical stators **62** can cause a longer residence time (i.e., dwell time) in the combustion chamber **60**.

[0053] As the helical coil of flow tightens the radial temperature distribution pattern can generally become more pronounced. For example, the distribution pattern can be higher at the core of the flow and lower at the combustion chamber's wall. After moving through the combustion chamber **60**, the mixture can enter a reaction chamber **72**. The reactions inside the reaction chamber **72** can sustain the combustion of any remaining hydrocarbon in the mixture.

[0054] With reference to FIGS. **3** and **4***b*, as the flow of mixed and combusted gases (multi-phase fluid components) continues on through the reaction chamber **72**, the flow can encounter another helical stator **62**. In one embodiment, a helical stator **62** can form a border between the reaction chamber **72** and heat exchanger **46**. The helical stator **62** at this location can be smaller in diameter than that of the previous helical stator or stators **62** in the combustion chamber **60**, but can still include a rim dam **64**, vanes **66**, stop portion **68**, and openings **70**.

[0055] With reference to FIGS. **1** and **3**, the dwell time of the mixture within the converter tube assembly **12** can be dependent upon the overall length of the chambers inside the assembly **16**, as well as the helical stator spacing inside the assembly **16**. For example, the spacing of the stators **38** and/or **62** can facilitate a steady helical flow of the mixture within the tube assembly **12** and process the multi-phase fluid components (i.e. mass-dependent solid particles and vapors) for complete burning.

[0056] For a given translational velocity with no frictional or turbulent losses in the tube assembly **12**, there can be a preferred spacing of helical stators. For example, with a given design of helical stators (same number of vanes, equally spaced vanes, vane opening angles, and radial dimensions of rim dam and stop) the helical stators can be positioned in a constant diameter chamber at a characteristic length (preferred distance between stators) such that the stream of rotating multi-phase fluid components in the mixture maintains a rotation similar to a spinning bullet traveling down a rifled barrel. In other words, for a given tube length, the helical stators can be spaced apart in such a way that the flow rotates at a minimum up to one complete full rotation in between each helical stator.

[0057] This characteristic length can be dependent upon, for example, the mass bulk density of the mixture flowing through the given chamber, the initial flow translational velocity, and the length and number of vanes. By altering these factors, different characteristic lengths can be achieved, and the helical stators can be spaced apart so as to create preferred dwell times. For example, in at least some embodiments, the helical stators can be spaced apart such that one-half of a full rotation occurs between each stator, or some other fraction or multiple of a full rotation. This can facilitate turbulence within the chamber, decelerating the flow components and resulting in increased mixing and dwell time as compared to a chamber without any stators. In some embodiments, the dwell times for particulate matter inside a single chamber can range from 20 milliseconds to 200 milliseconds, depending on the chamber temperature and incoming exhaust volumetric flow rate. In some embodiments, the total flow of mixture inside the tube assembly **12** can be held between 50 and 1000 milliseconds. Other ranges for dwell and/or holding times are also possible.

[0058] The helical stators described herein also can affect the backpressure felt within the converter tube assembly **12**. By varying the geometry (e.g. length and surface area of rim dams and stops) and positioning of the helical stators, the pressure within the tube assembly **12** can be altered or adjusted as desired.

[0059] With reference to FIG. **3**, in some embodiments the tube assembly **12** can generally comprise an ignition zone **74** near the injection head **14**, a dilution zone (e.g. mixing chamber **56** and combustion chamber **60**), and a cooling zone (e.g. reaction chamber **72** and heat exchanger **46**). In at least one embodiment, an insulating shell (not shown) can be used to cover the tube assembly **12**. The insulating shell can, for example, facilitate preheating of untreated exhaust as it flows from inlet **24** towards the mixing chamber **56**.

[0060] NOx reduction within the converter tube assembly **12** can be accomplished via cooling and catalytic conversion. Cooling can occur through the use of a device such as the heat exchanger **46**. With continued reference to FIG. **3**, helical stators **62** can bound the heat exchanger **46** on either side, isolating the heat exchanger **46** into its own chamber to provide continued residence time within the tube assembly **12** for the burning mixture. In some embodiments, the helical stators **62** bordering the heat exchanger **46** can provide less resistance to the mixture than the helical stators **62** found in the combustion chamber **60**. This can be accomplished, for example, by narrowing the size of the vanes **66**, decreasing the size of the stop **68**, increasing the size of any openings **70**, and/or decreasing the size of the rim dam **64**. This reduction in resistance can enhance the flow rate of the mixture and help it to overcome any resistance due to the friction it may encounter from, for example, tubes in a heat exchanger **46**, as well as from a smaller diameter of the heat exchanger as compared to the reaction chamber.

[0061] With reference to FIGS. **5**A and **5**B, a heat exchanger **46** can comprise a counter flow device whereby the incoming untreated exhaust flow from the inlet **24** can enter at opening **78** and initially follow a path through a packet **50** of tubes **80** which are coated with catalyst. In some embodiments, the heat exchanger **46** can be capable of sustained operation without significant degradation to any catalytic coatings.

[0062] With reference to FIG. **5**B, containment plates **82** can inhibit flow so that the stream of untreated exhaust flows out the tubes **80**, into a next packet of tubes, and out openings **84**. The untreated exhaust can move through a plurality of either coated and/or uncoated tubes, finally entering openings **86** and then exiting openings **88** and into pre-heat jacket **54**. Packet walls **90** can be used to separate out the packets of tubes. The number of tubes and tube packets needed to heat the incoming untreated exhaust to a preferred temperature while minimizing the untreated exhaust backpressure can be a function of the overall pressure difference, gas velocity, and tube packet temperature environment.

[0063] In at least one embodiment, the heat exchanger **46** tube packets can raise the untreated exhaust temperature by 350° F. (450 K), deriving their source of heat primarily from the combustion chamber **60**. Other temperature increases or ranges are also possible. The heat exchanger **46** can thus provide preheating to the incoming untreated exhaust from inlet **24** to decrease the required secondary fuel usage from fuel device **22**. While the illustrated embodiment shown in FIG. **5**B directs the flow of untreated exhaust to the downstream heat exchanger packet **80**, in other embodiments the inlet **78** to the heat exchanger **46** can be located elsewhere.

[0064] With continued reference to FIG. **5**B, an example heat exchanger **46** can be a packet consisting of 100 heat-

resistant tubes each of one-eighth diameter and 5 inches in length. To raise the temperature of the untreated exhaust by 350° F. can require, for example, 10 packets for an exhaust inlet **24** of 2 inches in diameter. Other numbers of tubes and tube size and diameter are also possible. The counter flow method illustrated in FIGS. **5**A and **5**B can provide a higher untreated exhaust gas temperature as the untreated exhaust gas enters the mixing chamber **56** as compared to a parallel flow. In some embodiments, a parallel flow method can be used in the heat exchanger **46** to reduce the cross flow tube temperature and/or improve catalytic conversion.

[0065] In at least one embodiment, the cross-sectional shape of the heat exchanger **46** can be rectangular to make maximum use of the tube lengths. Other cross-sectional shapes can also be implemented, including a circular cross-section. As described above, the heat exchanger **46** tubes can derive their source of heat from the combustion chamber **60** flow output as the mixture of secondary fuel, secondary air, and/or exhaust discharges from the combustion chamber **60** towards the exhaust pipe **18**. The flow output of the heat exchanger **46** tubes can be channeled toward the mixing chamber openings **58**. This method of preheating the untreated exhaust can facilitate reduction of secondary fuel usage.

[0066] Referring to FIGS. **3** and **5**B, as the mixture of burning secondary fuel, secondary air, and/or exhaust moves through the tube assembly **12** towards the exhaust pipe **18** and impinges on the catalytic coated tubes of the heat exchanger **46**, the NOx in the mixture can disassociate into nitrogen and oxygen. By maintaining a low oxygen environment, as well as a cooler environment in the heat exchanger **46**, NOx reduction can be enhanced.

[0067] In some embodiments, heat-resistant metal tubes can be used in the heat exchanger **46**. As described above, these tubes can be coated and/or uncoated. In some embodiments, poison-resistant lean NOx catalyst coatings can be used. Coatings can be selected to reduce NOx. The catalyst coatings can, in some embodiments, preferably comprise a metal zirconium phosphate such as barium, cesium or silver. (Reference is made, for example, to U.S. Pat. No. 6,407,032 B1, issued Jun. 18, 2002 to Labarge et al., which describes a poison resistant lean NOx catalyst) Embodiments can vary according to application.

[0068] With continued reference to FIG. **3**, as the mixture travels through the heat exchanger **46**, its high temperature gas can impart heat to the incoming untreated exhaust gas flowing through the tubes in heat exchanger **46**. The heat exchanger **46** can thus facilitate cooling of the mixture, as well as add additional residence time. In at least one embodiment, the heat exchanger **46** can be sized to reduce the back pressure felt by the exhaust inlet **24**. Other embodiments can include increased cross sectional areas and lengths of the heat exchanger **46** to further enhance the heat transfer capabilities and reduce pressure difference.

[0069] The reaction chamber **72** can complete the high-temperature combustion transition phase prior to introducing the mixture into the cooler flow zone of the heat exchange **46**. The gas to gas heat transfer process of the heat exchanger **46**, as well as the heat exchanger's length can facilitate cooling of the flow of mixture in the tube assembly **12**. As described above, by cooling the heated mixture as the mixture moves through the heat exchanger **46**, some or all of the NOx components remaining in the mixture can be reduced and converted into nitrogen and oxygen before leaving through exhaust pipe **18**.

[0070] In some embodiments, other cooling methods besides that shown in FIGS. **3**, **5**A, and **5**B are also possible. For example, air from the blower **23** can be directed not only into the injector head **14**, but also along the outside of one or more of the chambers in the tube assembly **12**. With reference to FIG. **6**, in an embodiment of another thermal converter system **110**, air can be directed to a jacket, or shell **76** along the outside of the reaction chamber **72**. The untreated exhaust inlet **24** can be located upstream of the shell **76**, such that as a mixture of secondary fuel, air, and exhaust is burned, it is cooled in part by the air moving through shell **72**, and NOx can be reduced.

[0071] In some embodiments, the chamber length of the reaction chamber **72** can be at least twice the chamber's diameter such that the heat transfer across the chamber wall is established by the combustion products on the inside of the chamber and any air coolant flow on the other side. This can facilitate cooling of the combustion products inside the reaction chamber **72** and reduction of NOx.

[0072] The tube assembly **12** and thermal converter systems described above can be used with a variety of engines and/or applications, including but not limited to diesel engines using diesel fuel or biodiesel blends. As described above, the thermal tube assembly **12** can use a series of chambers and helical stators. While the embodiment illustrated in FIGS. **1**-**4** uses five helical stators, other embodiments can use different numbers and/or configurations of helical stators. Additionally, while the embodiment illustrates a mixing chamber, combustion chamber, and reaction chamber, other numbers of chambers can also be used.

[0073] As described above, combined secondary air, secondary fuel, and untreated exhaust can be directed through the tube assembly **12**. The chambers and helical stators inside can provide a travel path in which controlled axial and radial temperature distributions provide desirable reaction times that are mass dependent. Thus, the tube assembly **12** and system **10** described above can utilize timed heated chemical environments (e.g. mixing chamber **56**, combustion chamber **60**, reaction chamber **72**, and heat exchanger **46**) to promote selected reactions and reduce unwanted emissions. A chemical atmosphere or atmospheres can be provided inside the tube assembly **12** which cause chemical changes by inducing oxidation and/or reduction reactions, even in the presence of the engine exhaust's excess air. These chemical environments can range in temperature. In at least one embodiment, for example, the temperatures in the above-mentioned chambers can range from 800° F. (700 K) to 2300° F. (1533 K). Other ranges and temperatures are also possible, although staying below 2800° F. (1810 K) can be preferred due to the onset of rapid NO formation reactions. Chamber temperature zones can be provided for thermal mixing, high temperature combustion, heat exchanger cooling, and/or discharge cooling. In some embodiments, the tube assembly **12** can eliminate approximately 89 percent of all particulate matter.

[0074] The tube assembly **12** and system **10** described above can be used advantageously, for example, to reduce and/or eliminate nitrogen oxides (NOx, the compounds of nitric oxide NO and nitrogen dioxide NO_2), particulate matter (PM, carbon "soot" that is in the solid state), unburned hydrocarbons including paraffins, olefins, and aromatic hydrocarbons, and partially-burned combustion products such as car-

bon monoxide (CO) and hydrocarbon substances including aldehydes, ketones, and carboxylic acids. The system **10** can, for example, be used on new engines, retrofitted onto old engines, or be used with other sources of untreated exhaust. In some embodiments, the system **10** can be retrofitted onto an existing automobile, such as a diesel engine truck.

Controller and Systems Control

[0075] With reference to FIGS. **1-7**, the controller **20** can comprise, for example, an electronic control unit comprising a microprocessor. The controller **20** can be in communication with a number of sensors located throughout the tube assembly **12** and system **10**, including but not limited to sensors which monitor the discharge temperature of the exhaust coming out of exhaust pipe **18**, the oxygen level of the exhaust coming out of the exhaust pipe **18**, the temperature of the untreated exhaust as it enters through inlet **24**, the oxygen level of the untreated exhaust as it enters through inlet **24**, the ambient temperature outside the tube assembly **12**, the ambient humidity outside the tube assembly **12**, and the temperature of a shell surrounding tube assembly **12**.

[0076] The controller **20** can be configured to monitor conditions of the system **10** via the sensors described above, and to maintain a predetermined discharge temperature at the exhaust pipe **18**. For example, the controller **20** can estimate the remaining fuel and oxygen levels of the incoming untreated exhaust at inlet **24**, as well as the fuel and oxygen levels of the tube assembly's outgoing discharge at exhaust pipe **18**, and then adjust the secondary fuel (from fuel device **22**) and secondary air (from air device **23**) to maintain a predetermined discharge temperature or temperatures at the exhaust pipe **18**. These predetermined temperature points can provide the most favorable reduction of pollutants, such as NOx, while minimizing secondary fuel and secondary air usage.

[0077] Additionally, the controller **20** can be configured to monitor conditions of the tube assembly **12**, and to maintain a predetermined air/fuel mass ratio inside the tube assembly **12**. By maintaining a predetermined air/fuel mass ratio, the reactions occurring in the chemical environments (i.e. chambers), as well as the resultant emission reduction, can be controlled.

[0078] With reference to FIG. **7**, and as described above, the controller **20** can communicate with at least one exhaust gas sensor **202**, at least one ambient sensor **204**, and at least one discharge sensor **206**. The at least one ambient sensor **204** can include a sensor which senses the temperature of a shell surrounding the tube assembly **12**.

[0079] With continued reference to FIG. **7**, the controller **20** can have a power interface and/or source **208** for starting and stopping the controller **20**. The controller **20** can begin to function when a start command is provided. The start command can initiate an orderly power up of the controller and a start sequence of the controller **20** logic. The controller **20** can shut down safely when a stop command is received.

[0080] The controller **20** can monitor and control the air device or devices **23**, or other cooling sources. The controller **20** can communicate with the igniter **32** in injector head **14**, and can monitor and control fuel device **22**. The fuel device **22** can include a fuel valve, which can be turned off and on to dispense appropriate amounts of fuel based on a signal or signals from the controller **20**. A maintenance and data logging interface **210** can provide a self-test function, data table uploads, and data logging downloads. In some embodiments, further auxiliary inputs and auxiliary flow controls can be used. For example, in some embodiments, the controller **20** can include a data interface which monitors and/or takes into account engine rpm and/or throttle position.

[0081] With reference to FIG. **8**, in at least one embodiment the thermal controller **20** functions can be performed using a sequence control **212**, emissions guidance **214**, and combustion control **216**.

[0082] Sequence control **212** can provide for the overall orderly startup, employment, and safe shutdown of the controller **20** and system **10**. The sequence control **212** can comprise a maintenance control **218**, and a power up/restart control **220**. A mode initialization control **222** can determine which mode (e.g. a basic or dynamic mode) the system is to operate in when controlling the emissions level of the engine exhaust. The determination of what mode to operate in can be based, for example, upon which data tables have been uploaded into the controller **20**.

[0083] The sequence control **212** can further comprise a normal operation control **224** and shutdown mode control **226**. The normal operation control **224** and shutdown mode control **226** can facilitate an optimal emissions reduction for a given embodiment and provide proper ignition **32** of the fuel spray in FIG. **2**. Abnormal shutdown **228** can be a safe-fail shutdown control whereby secondary fuel and secondary air sources from the fuel device **22** and air device **23** are secured and/or shut off, minimizing an unsafe condition due to residual fuel which may be in the tube assembly **12**.

[0084] With continued reference to FIG. **8**, emissions guidance **214** can provide for either a basic mode operation **230** or a dynamic mode of operation **232**. In the basic mode of operation **230**, a minimum set of data and/or sensor information can be used to economically provide a steady-state response. The basic mode of operation **230** can use temperature differences at the input and output of the system **10**. For example, the basic mode can use temperature data from sensors **202** and **206** at the exhaust inlet **24** and at exhaust pipe **18**, to control the amount of secondary fuel and secondary air that is directed into the tube assembly **12**.

[0085] The dynamic mode of operation **232** can respond to transient conditions which result from the system's changing load conditions. Changing load conditions normally cause a change in exhaust gas composition, including changes in pollutants. The dynamic mode of operation **232** can efficiently respond to changing fuel and air in the untreated exhaust stream entering inlet **24**. This dynamic response can result in using less secondary fuel and secondary air as compared to the basic mode, thereby resulting in better fuel economy for the system **10**.

[0086] With continued reference to FIG. **8**, the combustion control **216** can comprise an air control **234**. As described above, the controller **20** can communicate with the air device or devices **23**, or other cooling sources, to control the amount of secondary air that is directed into the injector head **14**, as well as control any air which may be moving along the outside of the tube assembly **12** to aid in heat exchange.

[0087] The combustion control **216** can comprise a fuel control **236**. As described above, the controller can communicate with the fuel device **22** to control the amount and rate of secondary fuel delivery which is directed into the injector head **14**.

[0088] The combustion control **216** can further comprise an AFR (air to fuel ratio) control **238**. The AFR control **238** can, in combination with the fuel control **236** and air control **234**,

control the air to fuel ratio of the secondary air and secondary fuel directed into the injector head **14**, and consequently, the tube assembly **12**.

[0089] The combustion control **216** can further comprise a thermal control. As described further herein, the thermal control **240** can further control the amount of secondary fuel and secondary air entering tube assembly **12**. In some embodiments, the combustion control **216** can further comprise auxiliary controls **242**.

[0090] With reference to FIGS. **9-11**, emissions guidance and combustion control are shown in further detail. FIG. **9** schematically illustrates an embodiment of the emission guidance **214** and combustion control **216**, as utilized in the controller **20**. FIG. **10** illustrates an embodiment of commands and decisions made by the controller **20** during a basic mode of operation **230**, and FIG. **11** illustrates an embodiment of commands and decisions made by the controller **20** during a dynamic mode of operation **232**.

[0091] With reference to FIGS. **9** and **10**, and specifically to operation block **244** in FIG. **10**, in a basic mode of operation **230**, the controller **20** can first monitor the environment of the system **10**. The environment can be monitored via the ambient pressure, humidity, and temperature sensors **204**, including a tube assembly **12** shell temperature sensor as described above.

[0092] With reference to operation block **246**, the controller **20** can then collect information about the temperature of the untreated exhaust at inlet **24** from sensor **202**, as well as the temperature of the exhaust being discharged out exhaust pipe **18** from sensor **206**.

[0093] When an engine is running at a given load, the incoming untreated exhaust will generally have a temperature related to the load (for example 2-cycle and 4-cycle diesel engines each generally show a linear increase in exhaust temperature as a function of percent of full load, though each have a different rate of increase). Ideally, for a given engine load, the discharge temperature should be within a certain range, indicating that hydrocarbon pollutants have been burned off, and NOx has been reduced.

[0094] Based on the temperature readings from the sensors described above, particularly that of the incoming untreated exhaust sensor, the controller **20** can get an indication of the engine load. Based on this indication and the values obtained from the other sensors, and with reference to operation block **248** in FIG. **10**, the controller **20** can then compare the temperature values it reads from the sensors with a pre-loaded table of temperature set points. These temperature set points, along with information about the temperature and construction of the tube assembly **12** shell, can be used to determine a temperature error as follows:

> Ktube-1*((Tdischarge−T set point one)−(Texhaust−T set point 2)), where Ktube-1 is a function of shell construction and temperature, and the temperature set points are derived from uploaded temperature tables in the controller 20.

[0095] The composition of remaining fuel in the untreated exhaust, along with secondary fuel and secondary air (introduced from fuel device **22** and air device **23**) can produce a composite temperature environment inside the tube assembly **12**. Based on the temperature error obtained above, and with reference to operation block **250** in FIG. **10**, the controller **20** can use a composite lambda function to calculate a desired composite lambda.

[0096] Similar to the industry of modern gasoline engines with three-way catalytic converters, lambda in general can be a desired air-fuel ratio divided by the stoichiometric air-fuel ratio for a given application. Therefore, a lambda equal to one can be an air-fuel mixture that is neither rich nor lean. Composite lambda, as described herein, can be a lambda which relates to the total air and total fuel in the tube assembly **12**. Thus, it can be a composite of the secondary air, secondary fuel, and any air and fuel in the untreated exhaust. The desired composite lambda can be a value which can help ensure that the discharge temperature at exhaust pipe **18** is within a predetermined range, and that the pollutants in the untreated exhaust (including NOx) are being converted appropriately into their less harmful forms.

[0097] Based on the information it has from the sensors described above, the controller **20** can calculate a desired composite lambda that will provide a chemical environment which will complete the combustion process at a minimum temperature and maximum use of oxygen. Such an environment can be ideal in that it requires as little secondary fuel as possible, while still completing the combustion processes desired.

[0098] With continued reference to FIGS. **9** and **10**, and with particular reference to operation block **252** of FIG. **10**, in an air-fuel control portion of combustion control **216**, the controller **20** can use a lambda/AFR function to separate the composite lambda value from operation block **250** into secondary fuel and secondary air values needed to maintain a desired composite lambda in the tube assembly **12**.

[0099] With reference to operation block **254** of FIG. **10**, the separated secondary fuel and secondary air values can be then be communicated to initial fuel and initial air command functions that use feedback from fuel device **22** and air device **23**, for example, to produce F' command and A' command signals (corresponding to secondary fuel and secondary air commands, respectively).

[0100] With continued reference to FIGS. **9** and **10**, and in particular to operation block **256** of FIG. **10**, in the thermal control portion of combustion control **216**, the secondary fuel and secondary air commands can be fed to a thermal control function that watches over the operation to guard against runaway commands and runaway temperatures. For example, the controller **20** can build a temperature profile of the system **10** in its environment while power is applied to controller **20**, as well as based on the controller's last use (e.g. in case the controller **20** is experiencing multiple short periods of on-off use). Since the secondary air-fuel ratio can be increased by either an increase in secondary air or a decrease in secondary fuel, the controller **20** can be configured to watch and see what happens when a command is given.

[0101] For example, and with continued reference to decision block **256** in FIG. **10**, the controller **20** can monitor the discharge temperature at exhaust pipe **18**, as well as other sensors, to determine if appropriate changes are occurring (e.g. if the system **10** is operating within the desired temperature set points), or if there is any type of temperature runaway.

[0102] With reference to operation block **258**, if changes are needed to the secondary fuel and/or secondary air commands, a change direction logic can calculate appropriate changes and modify the secondary fuel, F command, and secondary air command, A command. Because the controller **20** is using only two temperatures (untreated exhaust temperature and discharge temperature), but there are four variables (secondary fuel, secondary air, fuel in the untreated

exhaust, air in the untreated exhaust), the logic of controller **20** can monitor a temperature runaway and adjust accordingly.

[0103] With reference to operation block **260**, if no change is needed to a secondary fuel or secondary air command, then the commands can simply pass along to fuel flow device **22** and/or air device **23**.

[0104] In some embodiments, the basic mode of operation **230** described above can further use oxygen sensors at the exhaust inlet **24** and discharge location **18** to estimate minimum secondary air using a method similar to the temperature error formula. In some embodiments, the basic mode of operation **230** can be used as an alternate method, for example, if another method and its required sensors fail to operate.

[0105] With reference to FIGS. **9** and **11**, in some embodiments a dynamic mode of operation **232** can be used instead of, or with, the basic mode of operation **230**. With reference to operation block **262** of FIG. **11**, in the dynamic mode of operation **232**, the controller **20** can collect ambient sensor data from sensors **204**, such as that obtained in the basic control mode **230**.

[0106] With reference to operation block **264** in FIG. **11**, the controller **20** can collect information from the sensors **202** and **204** about not only the temperature of the incoming untreated exhaust at inlet **24**, but also the oxygen level of the incoming untreated exhaust at inlet **24**. The controller **20** can also collect not only information about the temperature of the exhaust discharged at exhaust pipe **18**, but also the oxygen level of the exhaust discharged at exhaust pipe **18**.

[0107] With reference to operation block **266** in FIG. **11**, the controller **20** can compare the temperature values it reads from the sensors with a pre-loaded table of temperature set points. These temperature set points, along with information about the temperature and construction of the tube assembly **12** shell, can be used to determine a temperature error, as described above.

[0108] Based on the temperature error obtained above, and with reference to operation block **268** in FIG. **11**, the controller **20** can use a composite lambda function to calculate a desired composite lambda (e.g. desired mixture of secondary fuel, secondary air, and untreated exhaust in the tube assembly **12**) to provide a chemical environment to complete the combustion process at a minimum temperature and maximum use of oxygen. The dynamic mode of operation **232** can use the oxygen sensor and temperature sensor information in a proportional and derivative control and therefore fewer iterations can be needed to determine an appropriate amount of secondary fuel and secondary air. Furthermore, in some embodiments, the dynamic mode of operation **232** can be responsive to changes in exhaust emission constituents of the engine, and can adjust the composite lambda function accordingly to address such changes.

[0109] With reference to operation block **270**, in order to provide a smoother response (less overshoot or undershoot), the controller **20** can use rate feedback in the dynamic mode of operation **232**. For example, the controller **20** can adjust the rate of rise and fall for the desired composite lambda, providing a control over incoming engine exhaust transients while minimizing potential overshoot or undershoot of the desired discharge temperature at exhaust pipe **18**.

[0110] Over time, it is possible for a sensor in the system **10** to drift or degrade in its output, resulting in possible errant commands from the controller **20**. With reference to operation block **272** in FIG. **11**, the controller **20** can adjust to compensate for steady-state errors in the system **10** by integrating the control signals and driving any bias out of the control logic. The dynamic mode **232** can thus not only provide for a more timely, accurate response to changing engine conditions, but can also help to reduce secondary fuel usage.

[0111] With reference to FIG. **9** and to operation block **252** of FIG. **11**, in an air-fuel control portion of combustion control **216**, the controller **20** can use a lambda/AFR function to separate the composite lambda value from operation block **250** into secondary fuel and secondary air values needed to maintain a desired composite lambda and temperature set points in the tube assembly **12**.

[0112] With reference to operation block **254** of FIG. **11**, the separated secondary fuel and secondary air values can then be communicated to initial fuel and initial air command functions that use feedback from fuel device **22** and air device **23**, for example, to produce F' command and A' command signals (corresponding to secondary fuel and secondary air commands, respectively).

[0113] With continued reference to FIGS. **9** and **11**, and in particular to operation block **256** of FIG. **11**, in the thermal control portion of combustion control **216**, the fuel and air commands can be fed to a thermal control function that watches over the operation to guard against runaway commands and runaway temperatures, such as for example as described above with respect to the basic operation mode **230**.

[0114] With continued reference to decision block **256** in FIG. **11**, the controller **22** can monitor the discharge temperature at exhaust pipe **18**, as well as other sensors, to determine if appropriate changes are occurring (e.g. if the system is operating within the desired temperature set points), or if there is any type of temperature runaway.

[0115] With reference to operation block **258**, if changes are needed to the secondary fuel and air commands, a change direction logic can calculate appropriate changes and modify the fuel, F command and air command, A command.

[0116] With reference to operation block **260**, if no change is needed to a secondary fuel or air command, then the commands can simply pass along to fuel device **22** and/or air device **23**. In some embodiments, the command to the fuel device **22** in the dynamic mode can result in adjustment of the fuel delivery from a full spray to intermittent dosing in the injector head **14**.

[0117] As described above, the system **10** and methods of use can be incorporated with engine applications, including but not limited to those of a vehicle, truck, or other device. In some embodiments of the system **10**, the system **10** can include emissions control or operational performance needs that extend sensory information beyond that of the preferred embodiment to include one or more sensors and or transducers for, but not limited to, the following: displacement of linear or angular position of one or more dimensions or terrestrial positioning (e.g., global positioning system), speed/rpm, acceleration, non-contacting magnetic, ultrasonic, vibration, volumetric or mass flow meter measurements, gas concentration measurements (other than the lambda sensor), static or dynamic force or torque measurements, and electromagnetic (such as optoelectronic) measurements. In some embodiments the system **10** can acquire system data from existing application interfaces.

[0118] Although these inventions have been disclosed in the context of certain preferred embodiments and examples, it will be understood by those skilled in the art that the present

inventions extend beyond the specifically disclosed embodiments to other alternative embodiments and/or uses of the inventions and obvious modifications and equivalents thereof. In addition, while several variations of the inventions have been shown and described in detail, other modifications, which are within the scope of these inventions, will be readily apparent to those of skill in the art based upon this disclosure. It is also contemplated that various combinations or subcombinations of the specific features and aspects of the embodiments can be made and still fall within the scope of the inventions. It should be understood that various features and aspects of the disclosed embodiments can be combined with or substituted for one another in order to form varying modes of the disclosed inventions. Thus, it is intended that the scope of at least some of the present inventions herein disclosed should not be limited by the particular disclosed embodiments described above.

What is claimed is:

1. A system for reducing engine exhaust gas pollutants comprising:

a tube assembly comprising:

an injector head;

a plurality of chambers, at least one of the chambers coupled to the injector head, the plurality of chambers further comprising at least one component for directing a flow of mixture inside the tube assembly;

a discharge exhaust pipe coupled to one of the chambers;

a heat exchanger coupled to the plurality of chambers;

an untreated exhaust inlet coupled to the heat exchanger;

a fuel flow device operatively coupled to the injector head;

an air device operatively coupled to the injector head; and

a controller configured to communicate with the fuel flow device, the air device, and the injector head.

2. The system of claim **1**, wherein the injector head comprises a fuel injector nozzle and an igniter, a secondary fuel inlet, a secondary fuel outlet, and a secondary air inlet.

3. The system of claim **2**, wherein the fuel nozzle is configured to adjust fuel delivery from a full spray to an intermittent spray.

4. The system of claim **1**, wherein the fuel flow device is configured to direct secondary fuel into the injector head, and the air device is configured to direct secondary air into the injector head.

5. The system of claim **4**, wherein the secondary fuel is from the same source as the engine's fuel.

6. The system of claim **1**, wherein the at least one component comprises a helical stator comprising a rim dam and at least one radially spaced angled vane configured to direct the flow of mixture in a helical pattern through the tube assembly.

7. The system of claim **6**, wherein the flow of mixture comprises a burning mixture of secondary fuel injected by the injector head, secondary air injected by the injector head, and untreated exhaust delivered from the engine through the untreated exhaust inlet.

8. The system of claim **1**, wherein the heat exchanger comprises a plurality of tubes configured to direct a portion of untreated exhaust from the untreated exhaust inlet to one of the plurality of chambers and to raise the temperature of the portion of untreated exhaust.

9. The system of claim **8**, wherein the temperatures is raised by approximately 350 degrees F.

10. The system of claim **8**, wherein at least one of the tubes is covered with a catalyst.

11. The system of claim **10**, wherein the catalyst comprises a poison-resistant lean NOx catalyst.

12. The system of claim **1**, wherein the plurality of chambers comprise a mixing chamber, a combustion chamber, and a reaction chamber.

13. The system of claim **12** wherein the mixing chamber comprises a plurality of openings on an inner shell, and an outer shell which forms a passageway to the openings.

14. The system of claim **12**, wherein the mixing chamber is connected to the injector head, and the length-to-diameter ratio of an inner tube of the mixing chamber is less than three.

15. The system of claim **12**, wherein the mixing chamber diameter and internal overall flow resistance is sized to maintain a back pressure that matches an engine's operating characteristics.

16. The system of claim **1**, wherein a diameter of the untreated exhaust inlet is sized based on the exhaust pipe diameter, a maximum exhaust volumetric flow rate in the tube assembly, and an allowable backpressure in the tube assembly.

17. The system of claim **1**, wherein the controller is in communication with a plurality of sensors.

18. The system of claim **17**, wherein the plurality of sensors comprise at least one ambient sensor located outside of the tube assembly, at least one exhaust temperature sensor located adjacent the untreated exhaust gas inlet, and at least one discharge temperature sensor located adjacent the discharge pipe.

19. The system of claim **1**, wherein the controller is configured to control an amount of secondary air and secondary fuel entering the tube assembly from the fuel flow device and air device in order to maintain a desired discharge temperature at the discharge pipe.

20. The system of claim **1**, wherein the controller comprises a microprocessor.

21. The system of claim **1**, wherein the system is configured to be retrofitted onto existing diesel-powered equipment.

22. The system of claim **21**, wherein the existing diesel-powered equipment comprises a motor vehicle.

23. A device for reducing exhaust emission pollutants comprising:

a plurality of chambers in communication with an engine exhaust source and a discharge pipe, the plurality of chambers comprising components configured to manipulate an exhaust flow inside the chambers and form timed heated chemical environments for the combustion and chemical reaction of chemical pollutants.

24. The device of claim **23**, wherein the device is configured to reduce the amount of nitrogen oxides, particulate matter, unburned hydrocarbons, and partially-burned combustion products in the engine's untreated exhaust through a combination of heating and cooling in the plurality of chambers.

25. The device of claim **23**, wherein the chemical environments are configured to induce oxidation and reduction reactions even when the exhaust flow is lean.

26. The device of claim **23**, wherein the components comprise helical stators configured to control exhaust flow residence time within the plurality of chambers, and to direct the exhaust flow in a helical pattern through the plurality of chambers.

27. The device of claim **26**, wherein the helical stators each comprise a rim dam, a plurality of angular vanes, and a plurality of openings between the angular vanes.

28. The device of claim **23**, wherein the heated chemical environments comprise temperature zones in the plurality of chambers ranging from 800° F. (700 K) to 2300° F. (1533 K).

29. The device of claim **23**, wherein the heated chemical environments comprise a thermal mixing environment, a high temperature combustion environment, a heat exchanger cooling environment, and a discharge cooling environment.

30. The device of claim **23**, wherein the device comprises a right-circular long metal tube and an injector head, and wherein an igniter in the injector head is actuated until a flame detector detects heat.

31. The device of claim **23**, wherein the length and diameter of the injector head are determined by a maximum exhaust mass flow rate in the device.

32. The device of claim **23**, wherein one of the plurality of chambers comprises a heat exchanger, and another of the plurality of chambers comprises a mixing chamber.

33. The device of claim **32**, wherein the heat exchanger comprises a plurality of tubes connecting an engine exhaust inlet to the mixing chamber.

34. The device of claim **32**, wherein the heat exchanger is configured to both cool the exhaust flow in the plurality chambers, and heat untreated exhaust moving through the tubes.

35. The device of claim **32**, wherein the heat exchanger has a rectangular cross-section, and comprises a plurality of tubes.

36. The device of claim **32**, wherein one of the plurality of chambers further comprises a reaction chamber configured to complete high-temperature combustion of the exhaust flow prior to the exhaust flow entering the heat exchanger.

37. A method of reducing exhaust gas pollutants in an engine's exhaust, comprising:

providing an assembly comprising:

an injector head;

a plurality of chambers, at least one of the chambers connected to the injector head, the plurality of chambers comprising at least one component for directing a mixture of flows inside the tube assembly;

a discharge exhaust pipe connected to one of the chambers;

a heat exchanger connected to the plurality of chambers;

an untreated exhaust inlet connected to at least one of the heat exchanger and injector head;

a controller in communication with the injector head;

directing untreated exhaust from the engine to at least one of the injector head and heat exchanger;

directing secondary fuel and secondary air into the injector head;

igniting the secondary fuel;

directing the ignited secondary fuel and secondary air into the plurality of chambers;

directing the untreated exhaust from at least one of the injector head and heat exchanger into the plurality of chambers to form the flow of mixture inside the tube assembly;

treating the untreated exhaust by combusting pollutants in the flow of mixture in the plurality of chambers;

cooling the mixture of flow in the plurality of chambers to reduce nitric oxides mixture of flow; and

discharging the mixture of flow out the discharge exhaust pipe.

38. The method of claim **37**, wherein the controller estimates fuel and oxygen levels in the untreated exhaust, as well as fuel and oxygen levels in the discharged mixture of flow, and adjusts the amount of secondary fuel and secondary air being delivered to the injector head in order to maintain a desired discharge temperature at the discharge exhaust pipe.

39. The method of claim **37**, wherein the controller maintains a pre-determined overall air/fuel mass ratio in the plurality of chambers.

40. The method of claim **37**, wherein the controller is responsive to changes in untreated exhaust constituents.

41. A basic control method for controlling secondary fuel and related air sources in a system which reduces engine exhaust gas pollutants, the basic control method comprising:

providing an assembly comprising:

an injector head, a plurality of chambers connected to the injector head and a discharge exhaust pipe, an untreated exhaust inlet connected to the plurality of chambers, a controller in communication with the injector head, at least one ignition device, at least one ambient sensor, and at least one temperature sensor adjacent the exhaust inlet and at least one temperature sensor adjacent the discharge exhaust pipe;

collecting temperature, humidity, and pressure data from the at least one ambient sensor and at least one temperature sensors;

comparing the obtained temperature data with predetermined values of temperature set points in the controller, and based on the set points, determining a temperature error;

calculating a desired composite lambda, the composite lambda representing a total air and fuel ratio inside the plurality of chambers;

separating the desired composite lambda and producing secondary fuel and secondary air commands which direct the amount and rate of delivery of the secondary fuel and secondary air into the plurality of chambers to be mixed with untreated exhaust; and

monitoring the discharge temperature of the mixture at the discharge pipe and modifying the secondary fuel and secondary air commands.

42. A dynamic control method for controlling secondary fuel and related air sources in a system which reduces engine exhaust gas pollutants, the dynamic control method comprising:

providing an assembly comprising:

an injector head, a plurality of chambers connected to the injector head and a discharge exhaust pipe, an untreated exhaust inlet connected to the plurality of chambers, a controller in communication with the injector head, at least one ignition device, at least one ambient sensor, and at least one temperature sensor and oxygen sensor adjacent the exhaust inlet and at least one temperature sensor and oxygen sensor adjacent the discharge exhaust pipe;

collecting physical and chemical data of temperature, humidity, and pressure from the at least one ambient sensor and at least one temperature sensors;

comparing the obtained temperature data with predetermined values of temperature set points in the controller, and based on the set points, determining a temperature error;

calculating a desired composite lambda, the composite lambda representing a total fuel and air ratio inside the assembly;

adjusting the rate of rise and fall for the desired composite lambda in order to minimize potential overshoot or undershoot of a desired discharge temperature at the discharge exhaust pipe;

adjusting the desired composite lambda to compensate for steady-state errors;

separating the desired composite lambda and producing secondary fuel and secondary air commands which direct the amount and rate of delivery of the secondary fuel and secondary air into the plurality of chambers to be mixed with untreated exhaust; and

monitoring the discharge temperature and oxygen levels and modifying the secondary fuel and secondary air commands; and

monitoring the secondary air commands for chamber cooling.

43. A device for reducing exhaust emission pollutants comprising:

a plurality of chambers in communication with an engine exhaust source and a discharge pipe, the plurality of chambers configured to create timed chemical environments, and wherein at least two types of chemical reactions occur within the plurality of chambers.

44. The device of claim **43**, wherein the at least two types of chemical reactions comprise oxidation of carbon monoxide and hydrocarbon particles, and reduction of nitric oxides.

45. A method of timed chemical heating and cooling of exhaust pollutants comprising:

introducing untreated exhaust flow into a plurality of chambers;

introducing a combination of burning fuel and air into the chambers to form a mixture with the untreated exhaust flow;

monitoring the cooling of chambers; and

holding the mixture for a predetermined period of time within the plurality of chambers.

46. The method of claim **45**, wherein the predetermined period of time comprises a range of 50 to 1000 milliseconds.

47. The method of claim **45**, wherein particulate matter inside the mixture is held between 20 to 200 milliseconds within a single chamber of the plurality of chambers.

* * * * *