# Load Frequency Controllers Considering Renewable Energy Integration in Power System

**[1]Diambomba Hyacinthe Tungadio, [1]Yanxia Sun**
[1]Department of Electrical and Electronic Engineering Science
University of Johannesburg, Auckland Park Kingsway Campus, Johannesburg 2006, South Africa
tutudiambomba@yahoo.fr, ysun@uj.ac.za

**Abstract**: Load frequency control or automatic generation control is one of the main operations that take place daily in a modern power system. The objectives of load frequency control are to maintain power balance between interconnected areas and to control the power flow in the tie-lines. Electric power cannot be stored in large quantity that is why its production must be equal to the consumption in each time. This equation constitutes the key for a good management of any power system and introduces the need of more controllers when taking into account the integration of renewable energy sources into the traditional power system. There are many controllers presented in the literature and this work reviews the traditional load frequency controllers and those, which combined the traditional controller and artificial intelligence algorithms for controlling the load frequency.

**Key words**: Load frequency control, power system, controllers, and artificial intelligence.

## 1. Introduction

Power system is a dynamic system where interacts active elements connected together via power lines. Its goal is to deliver power to a variable load or ensemble of consumers [1, 3-4]. Changes in loads affect mainly the frequency of the power network, while the reactive power related to voltage magnitude is less sensitive to the changes of frequency, that is why the active and reactive powers are controlled separately. Automatic generation control (AGC) or load frequency control (LFC) is one of the main operations for a good management of electrical systems. The aim of LFC is to control the variation of active power and active power output of different generating units within the limits prescribed control area in response to the changes in system frequency and tie-line loading, and it helps to maintain the scheduled system frequency and establish interchange with others areas [3]. Due to dynamic characteristics of the load, whose dynamics are changing during the operation of the power system, most of the time the quality of the power supplied to the consumers is affected [5-6]. Therefore, in the day to day management of the electrical system, the load frequency control is necessary to maintain a continuous balance between power generated and power consumed or load demand.

The problem becomes more complex when dealing with an interconnected system [5–6]. In fact, the reliability and continuity of service of two or more isolated power grids (microgrids) can be achieved by their interconnection through ties-lines. In an interconnected power system , all generating units are assumed to form a coherent system [7–12]. In the steady state power system, the demands of areas are satisfied at the nominal frequency. The change of active power in one area is sustained by the increase in generation in all areas associated with a change

in the tie-lines power flow and a reduction in frequency [13–16]. As the power load demand varies randomly, all areas frequency and the tie-lines power interchange also vary [17–18]. The objectives of LFC are to minimize the deviations in frequency and tie-line power flows which are taken as the control variables and to ensure that the frequency variation is returned to zero. A basic control system strategy for the normal mode is to operate in such a way that it keeps the frequency at approximately nominal value, maintaining the tie-line power flow out of each area at the planned value. Each area power system should absorb its own load changes [3-4, 6]. That is why the primary purpose of operating the LFC is to keep the frequency changes during the load changes uniform.

Furthermore, the control model must be sensitive against changes in the area [3-4]. Figure 2 shows an interconnection of three power systems (three areas) via tie-lines. This configuration increases the reliability and the continuity of the new constituted system. In fact, the reliability and continuity of service of two or more isolated microgrids can be achieved by their interconnection through ties-lines. An interconnected power system can be considered as being divided into control areas; all generating units are assumed to form a coherent system [16–17]. In the steady state power system demands of areas are satisfied at the nominal frequency. The change of active power in one area is sustained by the increase in generation in all areas associated with a change in the tie-lines power flow and a reduction in frequency [4, 18–21]. There are some models and controllers used for frequency control in power grids in the literature [3]. Some authors have investigated the frequency control based on the different energy sources used in new power systems, while the other proposed models based on configuration of power system models and control techniques and strategies based on conventional as well as distribution generation using traditional controllers or controllers models based on artificial intelligence algorithm.

Considering the discussion above, this paper identifies and reviews the merits and demerits of the momentum gaining load frequency controllers such as traditional controller models, hybrid control strategies and predictive controller strategies to keep the frequency as scheduled. The emphasis is also set to identify the recent issues and challenges faced in the load frequency controllers; the integration of the renewable energy sources, power quality issues including frequency and voltage profile of the system to maintain to its nominal value in order to deliver quality electric power to the consumers and profitable to the electric utilities. Some indicators, such as controller settling time, and the maximum over-shoot (fast responses and good stability), are taken as a good indicator of a controller. The rest of the paper is organised as follows. In Section 2 the traditional controllers, such as proportional integral or proportional integral derivative, are reviewed; and the hybrid controllers are reviewed in Section 3. Section 4 presents the detailed literature review regarding the predictive control model. Finally, the conclusion is summarised in Section 5.

## 2. Traditional Controllers

Most of the researches in the field of the control of microgrids are devoted to the use of conventional controllers such as integral (I), proportional Integral (PI) or proportional Integral-derivative (PID). The raison of the traditional controller is 90% or more in industry. Figure 1 gives the standard control structure, where the variables (R), (e), (u), (Y) represent the desired input value, the tracking error, the control signal, and the actual output. To obtain a desired response, PID controller is the most widely used controller. There are some methods to turn the PID controller parameters. The following steps are generally used:

- Obtain an open-loop response and determine what needs to be improved;
- Add a proportional control to improve the rise time;
- Add a derivative control to improve the overshoot;
- Add an integral control to eliminate the steady-state error;
- Adjust each of $k_p$, $k_i$, and $k_d$, until you obtain a desired overall response.

where each $k_i$ represents the gain of the controller.

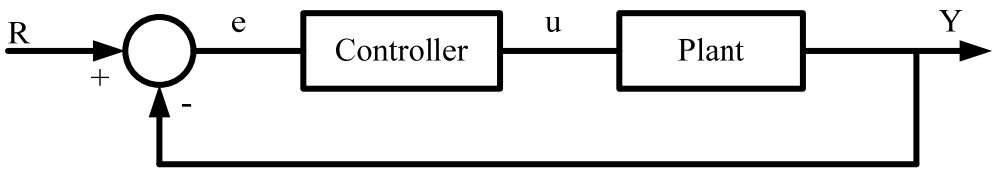


**Figure 1: Conventional Controller**

A new PID load frequency controller in frequency domain through direct synthesis approach was proposed in [22]. The method yields linear algebraic equations, solution of which gives the controller parameters. Saxena and Hote [23] have proposed a decentralised PID-LFC for perturbed mutlti-area power systems. The beauty of the proposed approach was that the fixed PID controller is taking care of uncertainty in the each control are. Delay distribution dependent LFC of power systems with probabilistic interval delays was proposed in [24]. An algorithm can obtain the gain of PI-based LFC and the allowable upper bound of the communication delay simultaneously while preserving the desired performance. The authors of Ref. [25] have proposed an AGC using two degree of freedom fractional order PID controller. The work also explored the effectiveness of the firefly algorithm based optimization technique in finding the optimal parameters of the controller and selection of R parameter. The optimal tuning of 3 degree of freedom PID controller for hybrid distributed power system using dragonfly algorithm (DA) was proposed in [26]. The efficacy of proposed DA over different reported algorithms was established in terms of convergence rate, minimum fitness value and dynamic performance of the system. Design of a fractional order PID controller for an AVR using particle swarm optimisation (PSO) algorithm was proposed in [27]. A novel cost function was defined to facilitate the control strategy over both the time- domain and the frequency domain specifications.

The authors of [28] have proposed a robust PI control of smart controllable load for frequency stabilization of microgrid power system. To guarantee the robustness of the proposed PI controller, an inverse additive perturbation is formulated as an optimisation problem and a

genetic algorithm (GA) was employed to tune and optimise the proposed PI control parameters. Fractional order PID controller design for LFC in electric power systems using imperialist competitive algorithm was proposed in [29]. This controller has five parameters to be tuned; thus, it provides two more degrees of freedom in comparison with the conventional PID. Researchers of [30] have proposed an optimal PID design for LFC using QRAWCP approach. In addition to the nominal situation, robustness of this controller was also tested on the same systems with respect to parametric uncertainty, external disturbances, tested on the same systems with respect to parametric uncertainty, external disturbances. Figure 2 shows the interconnected power system via tie-lines, this gives the configuration of the new power system.

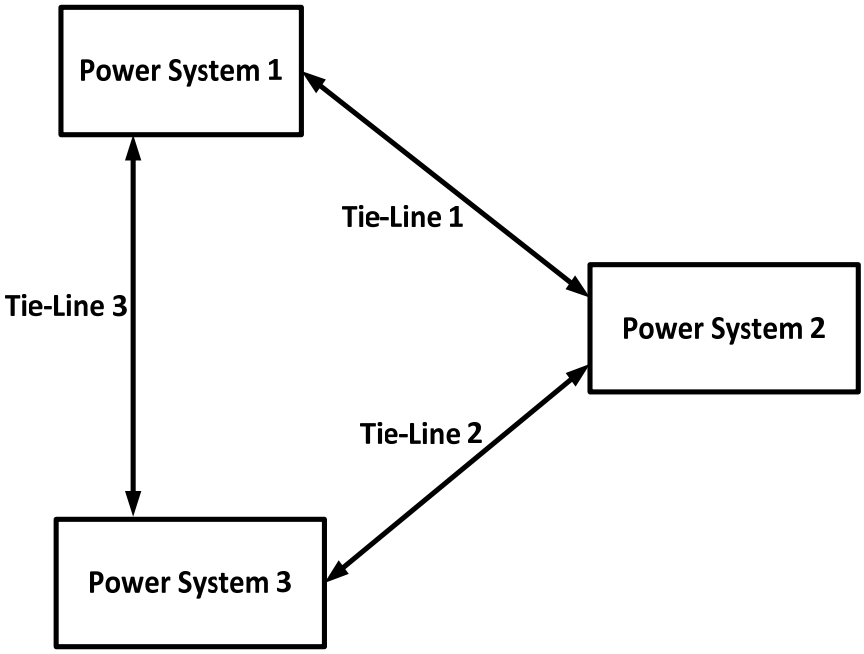


**Figure 2: Power system interconnected via tie-lines**

Fuzzy Gain Scheduling of PID controllers was presented in [31]. Fuzzy rules and reasoning are utilised on-line to determine the controller parameters based on the error signal and its first difference. Improved grey wolf optimisation technique for fuzzy aided PID controller design for power system frequency control was proposed in [32]. Proposed IGWO was initially evaluated using some standard test functions. The authors of [33] have presented a BFOA based design of PID controller for two areas LFC with nonlinearities. The effectiveness of the proposed BFOA was validated over different operating conditions, and system parameters variations. The research in [34] has presented a LFC of an isolated small hydro power plant using multi-pipe scheme, and the proposed scheme reduces the size of the dump load to 50%A generalized transfer function model for the system is developed with on/off control logic, and the parameters were optimised using the integral time absolute error technique. The design of a robust distributed control for interconnected microgrids was proposed in [35]. Time-domain analyses were carried out considering different scenarios and large disturbances. Zamani et *al*. [36] have presented a design of a fractional order PID controller using gases Brownian motion optimisation (GBMO) algorithm for LFC with governor saturation consideration. The

performance of the proposed controller in time domain and its robustness were verified by its comparisons with other controllers like GBMO based fuzzy controller and PI controller that used for LFC system in confronting with model parameters variations. The research in [37] introduced a robust PI control of smart controllable load for frequency stabilisation of microgrid power system. To guarantee the robustness of the proposed PI controller, an inverse additive perturbation was formulated as an optimisation problem. A new PID controller design for AGC of hydro power systems was presented in [38]. The open-loop frequency response curve was tangent to a specified ellipse and this makes the method to be efficient for controlling the overshoot, the stability and the dynamics of the system.

## 3. Hybrid Models

The integration of the renewable energy resources into the power system creates new issues because most of them are whether dependant. Power systems need advanced control methods for its daily management. In the control area, the new tendency is the combination of the intelligent optimization algorithms, such as particle swarm optimisation algorithm (PSO), fuzzy logic (FL), genetic algorithm (GA), and so on, with the conventional controller to solve the frequency or active power flow control issue in power system. Some models based on FL approach are available in the literature.

### 3.1 Fuzzy Logic Model

Li *et al*. [39] have proposed frequency control in the microgrid power system combined with an electrolyser system and fuzzy PI controller. The proposed control can be regarded as a mean of power quality control to improve frequency fluctuations. An optimal FL-based PID and self-tuning fuzzy PID controller were presented in [40–41]. Vigneysh and Kumarappan [42] have presented the control of PV-solid oxide fuel cell-battery energy storage (BES) based microgrid using an FL controller. FL based generalised droop control (GDC) for simultaneous voltage and frequency regulation in an AC microgrid was discussed in [43]. A fuzzy technique was utilised to tune the GDC and secondary control parameters. A fuzzy gain scheduling controllers for automatic generation of two area interconnected electrical power systems was presented in [44]. A novel hybrid local unimodal sampling teaching learning based optimised (TLBO) fuzzy-PID controller for LFC of multi-area power system was presented in [45]. A novel control scheme, which is based on the droop characteristics for LFC of microgrids in autonomous mode, was presented by Khederzadeh and Maleki in [46]. Sahu *et al.* [47] have presented a novel hybrid LUS-TLBO optimised Fuzzy-PID controller for load frequency control of multi-source power system. Again the robustness of the proposed controller for power system with AC tie-line only was studied under parametric variation conditions by varying all the parameters from -50% to 50% of their nominal values in steps of 25%. Liu *et al* [48] have presented a DMPC for LFC with dynamic fuzzy valve position modelling for hydro-thermal power system. In the proposed scheme, the limit position of the governor valve is modelled by a fuzzy model and the local predictive controllers are incorporated into the non-linear control system. A fuzzy adaptive model predictive approach for LFC of an isolated microgrid was presented in [49]. A generalised state space model of a typical isolated microgrid

having controllable and uncontrollable generating power sources were derived, and the same has been utilized to predict the future output and control inputs for the microgrid frequency control. Figure 3 gives the tie-lines models for two power systems interconnected.

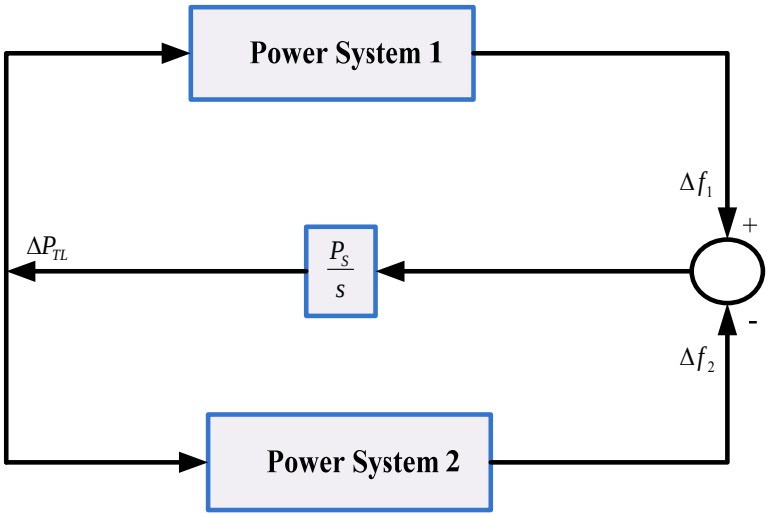


**Figure 3: Tie-lines models**

An adaptive polar FL based LF controller was proposed in [50]. The authors introduced a polar FL to overcome the issues of the computation time and memory requirements. Performance of the simple PFC and adaptive PFC using GAF is compared with the fuzzy and conventional PI controllers on a three-area system. An adaptive fuzzy logic LFC of multi-area power system was proposed in [51]. It was proved that the proposed controller ensures the boundedness of all variables of the closed-loop system and the tracking error. Yousef *et al*. [52] have proposed a LFC of a multi-area power system based on an adaptive FL approach. The FL system approximation capabilities were exploited to develop suitable adaptive control law and parameter update algorithms for unknown interconnected LFC areas. Research presented in [53] presents the FL based fine-tuning approach for robust LFC control in a multi-area power system. The design procedure of a robust FL-based fine tuning controller was substantially nourished by expert knowledge regarding the system performance. A fuzzy hierarchical approach-based optimal frequency control in the Great Britain power system was proposed in [54]. The proposed model allowed the fuzzy to supplement the conventional control rather than replace it.

FL controller in interconnected electrical power systems for LFC was presented in [55]. The model presented has shown the effectiveness and the suitability for damping out oscillations resulted from load perturbations. Sabahi *et al*. [56] have proposed a designing of an adaptive type-2 FL system LFC for a nonlinear time-delay power system. The proposed model was the combination of type-2 FL system and a non-conventional feedback controller. Cam and Kocaarslan [57] have proposed a LFC in two area power systems using fuzzy logic controller. The presented model has improved the dynamics of the system studied. The authors in [58] have proposed an optimal FL based frequency control strategy in a high wind penetrated power system. The proposed FL controller was blessed with robustness, simplicity, and reliability in

order to ameliorate the frequency deviation. A FL based droop control for simultaneous voltage and frequency regulation in an AC microgrid was proposed in [59]. It was shown that the proposed FL controller exhibits high performance and desirable response for different scenarios of change in load. Researchers [60] have proposed an autonomous operation and control of photovoltaic/solid oxide fuel cell/battery energy storage based microgrid using FL controller. The microgrid voltage and frequency was effectively maintained within the limits by the proposed FLC.

A two-level control strategy with FL for large-scale photovoltaic farms to support grid frequency regulation was proposed in [61]. The individual reference value for each local controller was determined. FL controller in interconnected electrical power systems for LFC was presented in [62]. Mode simulations of the power system show that the proposed FGPI controller was effective. LFC of an interconnected reheat thermal system using Type-2 fuzzy system including superconducting magnetic energy storage (SMES) units was proposed in [63]. The proposed method was tested on a two-area power system to illustrate its robustness performance with various area load changes. A FL based droop control for simultaneous voltage and frequency regulation in an AC microgrid was proposed in [64]. It was shown that the proposed FL controller exhibits high performance and desirable response for different scenarios of change in load. Adaptive FL-LFC of multi-area power system was proposed in [65]. It was proved that the proposed controller ensures the boundedness of all variables of the closed loop system and the tracking error. LFC in two area power systems using FL controller was proposed in [66]. It has been shown that the proposed FGPI controller can generate the best dynamic response following a step load change.

Application of FL for LFC of hydroelectrical power plants was presented in [67]. The comparison study indicated that the proposed FGPI controller has better performance than the conventional PI controller. The authors [68] have proposed an optimal FL based PID controller for LFC including SMES units. The multiple tabu search algorithm was applied to simultaneously tune PID gains, membership functions and control rules of FL-PID controller to minimize frequency deviations of the system against load disturbances. Introducing LQR-Fuzzy technique with dynamic demand response control loop to LFC model was proposed in [69]. This paper presents an idea of introducing a DR control loop in the traditional LFC model (called LFC-DR) using intelligent controller for a power system. Researchers [70] have proposed a novel scaling factor based FL controller for frequency control of an isolated hybrid power system. It was revealed that the proposed controller was very much robust in nature and takes care of non-linearity very well while QOHS algorithm was adopted. The authors [71] have proposed a fuzzy hierarchal approach-based optimal frequency control in the Great Britain power system. Structures of fuzzy controller offered high stability and robustness in the simulation results.

A novel hybrid DEPS optimized fuzzy PI/PID controller for LFC of multi-area interconnected power systems was proposed in [72]. Robustness analysis was performed by varying the system

parameters and operating load conditions from their nominal values. Intelligent droop control and power management of active generator for ancillary services under grid instability using FL technology was proposed in [73]. FL supervisor was developed to manage the power flows between the storage devices by choosing the optimal operating mode. Simulation based neuro-fuzzy hybrid intelligent PI control approach in four areas LFC of interconnected power system was proposed in [74]. The advantage of this controller was that it can handle the non-linearities, and at the same time it was faster than other existing controllers. The authors [75] have proposed an adaptive fuzzy gain scheduling for LFC. The proposed model was extremely well suited to the task of smoothly interpolating linear gains across the input space when a very non-linear system moves around in its operating space.

### 3.2 LFC based particle swarm optimisation algorithm

The PSO algorithm is one of the best intelligent optimization algorithms. A multi-stage fuzzy LFC using PSO was proposed in [76]. For achieving the desired level of robust performance, exact tuning of membership functions was very important. Intelligent frequency control in an AC microgrid online PSO-based tuning approach was presented in [77]. A novel hybrid PSO-PS optimized fuzzy PI controller for AGC in multi area interconnected power systems have proposed in [78]. Additionally, the proposed approach was further extended to multi-source multi area hydro thermal power system with/without HVDC link. Using a PSO and fuzzy rules the authors [79] presented a multi-area LFC. Heuristic procedures involving Particle Swarm Intelligence and Fuzzy based inferences have been employed to effectively obtain the optimized gains of PID controller. Any change in the load demand causes generator's shaft speed lower than the pre-set value and the system frequency deviates from the standard value results in malfunctioning of frequency relays. The authors [80] have proposed an improved PSO based AGC of multi-source nonlinear power systems interconnected by AC/DC links. It is found that significant improvement in the system dynamic performance is achieved by considering parallel AC/DC lines in comparison to only AC tie lines between control areas.

### 3.3 LFC based genetic algorithm

Research on LFC based on GA can be found in the available literature. The authors [81] have proposed an AGC of multi-area power system using multi-objective non-dominated sorting genetic algorithm-II (GA-II). The proposed approach was first applied to a linear two-area power system model and then extended to a non-linear system model by considering the effect of governor dead band non-linearity. A modified GA based load frequency controller for interconnected power systems was proposed in [82]. Floating point representation has been used, since it was more consistent, more precise and leads to faster convergence. Researchers [83] have proposed two robust decentralized control design methodologies for LFC. The first one is based on control design using linear matrix inequalities technique in order to obtain

robustness against uncertainties. The second controller had a simpler structure, which was more appealing from an implementation point of view, and it was tuned by a proposed novel robust control design algorithm to achieve the same robust performance as the first one. Design of load frequency controllers using GA for two area interconnected hydropower system was proposed in [84]. As far as the authors can discover, no work has been done for the optimisation of the gain settings of different types of controllers using the GA for LFC of an interconnected hydropower system.

Authors [85] have proposed a LFC using GA based fuzzy gain scheduling of PI controllers. The control methodology adopts a formulation for the area control error which always guarantees zero steady-state values for both the time error and inadvertent energy. Multiobjective design of LFC using GAs was proposed in [86]. This gives rise to complex structure of such controllers and reduces their applicability conventional LFC systems that use classical or trial-and-error approaches to tune the PI controller parameters are more difficult and time consuming to design. LFC using GA based fuzzy gain scheduling of PI controllers was proposed in [87]. The methodology used a formulation for the ACE which always guarantees zero steady state. A new load frequency variable structure controller using GAs was introduced in [88]. Selection of the variable structure controller (VSC) feedback gains by GAs was presented contrary to the trial and error selection of the variable structure feedback gains reported in the literature. The authors [89] have proposed an application of GA/GA-SA based fuzzy AGC of a multi-area thermal generating system. Optimal integral gains and PID gains were computed by GA. Short term load frequency using fuzzy a neural network was proposed. A FNN initially creates a rule base from existing historical load data was proposed in [90]. The parameters of the rule base were then tuned through a training process, so that the output of the FNN adequately matches the available historical load data.

### 3.4 LFC other models based on Artificial Intelligence algorithm

This section gives the controllers models based on algorithm using artificial intelligence strategies. Gua *et al*. [91] have presented a LFC of interconnected power system using grey wolf optimisation. The controller performance has been compared with the comprehensive learning PSO. The research in [92] presents the design of optimal AGC regulators using an output feedback control strategy for a multi-area interconnected power system. Barisal [93] has proposed a comparative performance analysis of TLBO for automatic LFC of multi-source power systems. It was found that the dynamic performance of the proposed controller was better than that of recently published DE optimized controller and optimal output feedback controller and also the proposed system was more robust and stable to wide changes in system loading, parameters, size and locations of step load perturbation and different cost functions. Cui *et al* [94] have proposed an observer based robust integral sliding mode LFC for wind power systems. The proposed model not only guarantees the asymptotical stability of overall power systems but also capable of improving the system robustness. Numerical examples were provided to demonstrate the effectiveness of the proposed model. The researchers in [95] have

proposed a fractional order PID controller to solve the LFC problem. Robust $H_\infty$ for LFC solution was presented in [96]. Qian et al., have presented a LFC by neural-network-based integral sliding mode for nonlinear power systems with wind turbine [97]. By this scheme, not only are the update formulas obtained, but also the control system possesses the asymptotic stability. The simulation results by an interconnected power system illustrate the feasibility and validity of the presented method.

Emotional learning-based intelligent controller was used to solve LFC problem in [98]. The controller includes a neuro-fuzzy system with power error and its derivative was used as inputs. A fuzzy critic evaluates the present situation, and provides the emotional signal or stress. The controller modified its characteristics so that its critic stress was reduced. An improving sliding mode design for LFC of power system integrated an adaptive learning strategy was proposed in [99]. The adaptive dynamic programming strategy is used to provide the supplementary control signal, which is beneficial to the frequency regulation by adapting to the real-time disturbances and uncertainties. An $H_\infty$ tracking performance criterion was introduced to minimize the approximation errors and the external disturbance effects. Considering a realistic power system with multi-source power generation based LFC was proposed in [100]. Usually only a reduced number of state variables or linear combinations thereof, are available. To resolve this difficulty, optimal output feedback controller which uses only the output state variables was proposed. LFC of power system under deregulated environment using optimal firefly algorithm was proposed in [101]. To investigate the effectiveness of the proposed approach, time domain simulations are carried out considering different contracted scenarios and the comparative results are presented. Majunder et *al.* have proposed a LFC for rural DG was proposed in [102]. The performances of these two proposed controllers were compared with that of a controller, which includes an expensive high bandwidth communication system through time-domain simulation of a test system. The magnitude of errors in power sharing between these three droop control schemes are evaluated and tabulated.

The research proposed in [103] proposed a LFC improvement of two adjacent microgrids in autonomous mode using back to back voltage-sourced converters. By application of the proposed algorithm, two microgrids could play the role of an auxiliary supply-demand for each other without the necessity of implementing a communication link between the two microgrids. Cooperative control of power system load and frequency by using differential games was proposed in [104]. With two areas and three areas LFC models, a non-cooperative equilibrium solution, and two cooperative equilibrium solutions with different time consistency properties were derived. Management and control for smart microgrid based on hybrid control theory was proposed in [105]. On the basis of the proposed model, a two-level hierarchical hybrid control was proposed based on the hybrid system control theory in terms of interactive adjustment between the continuous controller at the lower level and discrete management at the upper level. A sampled data automatic LFC of a single area power system with multi-source power generation was proposed in [106]. The authors investigated the effect of sampling period of the

controller signal on the performance of the continuous system. H-infinity LFC of interconnected power systems with communication delays was proposed in [107]. The model has considered the LFC design incorporating the effect of using open communication network. Further results on delays-dependent stability of multi-area LFC was proposed in [108]. Based on Lyapunov theory and the linear matrix inequality technique, a new stability criterion was proposed to improve calculation accuracy and reduce the computation time. Figure 4 shows new configuration of the power system.

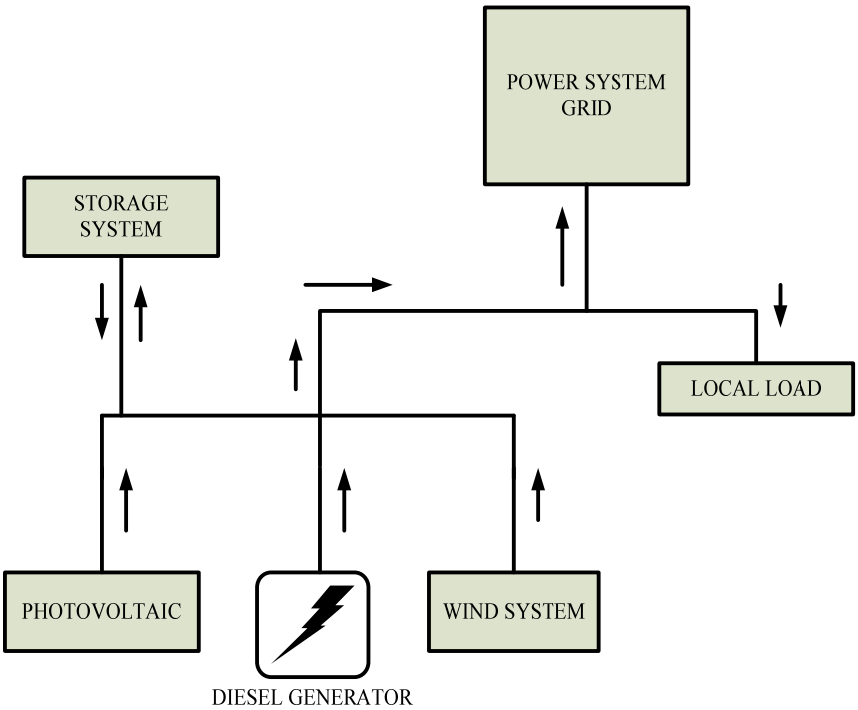


**Figure 4: New power system configuration**

Hasan *et al*. [109] have proposed an ABT based LFC of interconnected power system. A commercial case study was carried out to demonstrate effectiveness of the proposed model. LFC of interconnected power system via multi-agent system method was proposed in [110]. In the control frame, the upper-level agent, in a centralised way, coordinates the lower-level LFC agents to deal with the conflict between narrowing the ACE and stabilizing the power system frequency. Abdelaziz and Ali [111] have proposed a load frequency controller design via artificial Cuckoo search algorithm. Simulation results were presented to prove the improvement achieved using Cuckoo algorithm. Load frequency controller design via BAT algorithm for nonlinear interconnected power system was proposed in [112]. Evaluation of results shows that the proposed model achieved good robust performance for wide range of system parameters and load changes. LFC of interconnected power system with governor backlash nonlinearities was presented in [113]. The authors [114] have proposed a variable, non-linear tie-line frequency bias for interconnected systems control. Variable, non-linear tie-line frequency bias is a better simulation of electric system frequency response than fixed straight line bias because it recognizes the variable nature of a system's reaction to frequency changes. Discrete mode AGC of a two areas reheat thermal system with new area control error was proposed in [115]. The research dealt with discrete mode AGC of an interconnected reheat

thermal system considering a new are control error based on tie-line power deviation, frequency deviation, time error and inadvertent interchange.

A variable structure load frequency controller for multi-area power systems was proposed in [116]. Two designs were presented: the optimal variable structure load frequency controller (OVSLFC) and the pole placement variable structure load frequency controller (PPVSLFC). LFC of interconnected power systems via minimum variance regulator was proposed in [117]. It was shown that the detuned minimum variance regulator with extended least-squares estimation techniques gives better results than the other regulator. LFC of interconnected power system with governor backlash nonlinearities was presented in [118]. The considered system is a nonlinear multivariable feedback control system. Researchers [119] have proposed a controller parameters tuning of differential evolution (DE) algorithm and its application to LFC of multi-source power system. The superiority of the proposed approach has been shown by comparing the results with recently published optimal output feedback controller for the same power systems. The authors [120] have proposed a self-tuning LFC strategy for microgrids: Human brain emotional learning. Simulation results have shown the effectiveness of the emotional controller. Multi-area adaptive LFC developed for a comprehensive AGC simulator was proposed in [121]. Simulation results from three areas system driven by realistic load compositions shown that the proposed model had better tracking properties.

Researchers [122] have proposed an optimum megawatt-frequency control of multi-area electric energy systems. The P-f control problem has been selected for critical examination. A new smart charging method for electric vehicles for frequency control of smart grid was introduced in [123]. A smart charging method based on fuzzy controller was proposed, in which charging process was performed with respect to the frequency deviation of grid and state of charge (SOC) of EV battery. An improved control scheme based in droop characteristic for microgrid converters was introduced in [124]. The modifications added to the control were based on a feed forward current control that allows the converter to work in several modes. AGC of an interconnected hydrothermal system in continuous and discrete modes considering generation rate constraints (GRC) was introduced in [125]. A comprehensive procedure for continuous and discrete-mode optimisation of integral controllers using an integral squared error criterion was suggested. Optimisation of LFC parameters for power systems with reheats steam turbines and governor dead band nonlinearity was proposed [126]. It was shown that the governor dead band (backlash) nonlinearity tends to produce a continuous oscillation in the area frequency and tie-line power transient response. Design and analysis of DE algorithm based AGC for interconnected power system was introduced in [127]. The design problem was formulated as an optimisation problem control and DE was employed to search for optimal controller parameters.

NERC's control performance standards based load frequency controller for a multi-area deregulated power system with ANFIS approach was introduced in [128]. The proposed

controller was tested on the Indian regional grid system and its control performance standards were compared with the conventional PID controller and ANFIS controller. AGC of multi-area power systems with diverse energy sources using TLBO algorithm was proposed in [129]. The design problem was formulated as an optimisation problem and TLBO was employed to optimise the parameters of the PIDD controller. The authors [130] have proposed a novel quasi-oppositional harmony search algorithm for AGC optimization of three-area multi-unit power system after deregulation. The concerned objective was to intensify the deregulated AGC operation followed by load disturbances. Comparative performance evaluation of fractional order controllers in LFC of two areas diverse unit power system with considering GDB and GRC effects were proposed in [131]. Tuneable parameters were adjusted via an improved PSO algorithm which was powered by chaotic parameter and crossover operator to find a globally optimal solution. Demand response for frequency control of multi-area power system was introduced in [132]. In order to quickly stabilise the frequency of different areas, the tie-line power was adopted as the additional input signal of demand response. AGC of a Multi-area Hydro-thermal System with BES and firefly optimized PID controller was introduced in [133]. A BES was incorporated in area 1 and the system dynamic responses were compared with that of without BES system.

Discrete variable structure controller for LFC of multi-area interconnected power systems was proposed in [134]. A discrete version of a VSC for LFC of a two-area thermal and multi-area interconnected power system was presented. The authors [135] have proposed an optimisation of LFC parameters for power systems with reheats steam turbines and governor dead-band nonlinearity. When proportional feedback of area frequency error was used to stabilise the response it found that only overshoot was reduced, but settling time remains the same. TLBO algorithm based fuzzy-PID controller for AGC of multi-area power system was proposed in [136]. For the first time teaching–learning based TLBO algorithm was applied in this area to obtain the parameters of the proposed fuzzy-PID controller. LFC management in island operation was introduced [137]. A number of possibilities for the cooperation of turbine control modes and supervisory control of frequency and active power were investigated and evaluated. The authors [138] have proposed a sliding mode based LFC in power systems. A new discrete time sliding mode controller for LFC in control areas of a power system was presented. Intelligent controllers for LFC of two area power system were introduced in [139]. The objective was to eliminate errors due to the disturbances in both frequency and tie-line power so as to ensure an economic power generation.

Coordinated control of distributed energy resources (DERs) to support LFC was proposed in [140]. The error in feeder power flow with respect to scheduled value was utilized by the PI controller to estimate the change in power reference of all DER units. A new intelligent online fuzzy tuning approach for multi-area LFC self-adaptive modified Bat algorithm was introduced in [141]. The proposed controller guaranties stability and robustness against uncertainties caused by external disturbances and impermanent dynamics that power systems face. A hybrid firefly algorithm and pattern search technique for AGC of multi-area power systems was introduced in [142]. The proposed approach was extended to multi-area multi-source hydro thermal power system with or without considering the effect of physical constraints. The

authors [143] have proposed a comparative performance analysis of Artificial Bee Colony (ABC) algorithm in AGC for interconnected reheat thermal power system. The robustness analysis was applied to the power system which was optimised by ABC algorithm. Analysis of frequency sensitive wind plant penetration effect on load frequency control of hybrid power system was introduced in [144]. Simulation results presented here provided some guidance on the design parameters of frequency regulation scheme in the presence of frequency sensitive wind plant.

### 3.5 LFC based on Decentralised Techniques.

Some authors have proposed the solution of the LFC problem using the decentralised control models. Yang *et al*. [145] have proposed a decentralised power system LFC beyond the limit of diagonal dominance. Based on the presented model each local controller can be design independently. Decentralised adaptive LFC in a multi-area power system was proposed in [146]. The particularity of that research was the aggregation stage was performed by the use of an adaptive optimal decentralised control law. The proposed controller was found to be simple in structure and easy for implementation. Tan *et al*. [147] have proposed a decentralised LFC in deregulated environments. A method to analyse the stability of the decentralised LFC for normal environments was also extended to the deregulated case. Using a coefficient diagram method the authors in [148] have presented a new decentralised model for LFC in an interconnected power system. The designed method reduced the effects of uncertainties owing to variations in the parameters of governors and turbines as well as load disturbances.

Decentralised LFC for a multi-area interconnected was proposed in [149]. The simulation results indicate that the proposed control scheme works well. In addition, they show that the controlled system is robust to changes in the parameters of the power system and to bounded input disturbances acting on the system. The authors in [150] have presented a multi-area LFC of power systems, a decentralised variable structure approach. The proposed decentralized control was more practical than the centralized control scheme for this problem and ensures to attenuate the frequency and tie-line power deviations to zero due to different operating conditions and load changes. Decentralised sliding mode LFC for multi-area power systems was presented in [151]. The PI switching surface was constructed for each area to improve system dynamic performance in reaching intervals. Distributed LFC in an interconnected power system using ecological technique diagram method was proposed in [152]. The control structure was built on the frequency response model of multi-area power system, and physical constraints of the governors and turbines.

### 3.6 LFC based on Dual Mode Approach

Some dual models based frequency control methods are reviewed in this section. The design of biogeography optimisation based dual mode gain scheduling fractional order PI load frequency controllers for multi-source interconnected power systems was presented in [153]. The model is based on a dual mode gain scheduling of fractional order PI controller and it provides one more degree of freedom in comparison with the conventional PI controller. The

dual mode concept was also incorporated and the system performance was improved. The authors [154] have proposed a new design of dual mode Type-II fuzzy logic load frequency controller for interconnected power systems with parallel AC–DC tie-lines and capacitor energy storage unit. The dual-mode concept is incorporated in the proposed controller to improve the system performance. A DC link was connected in parallel with AC tie-line to stabilize the frequency of oscillations. Researchers [155] have proposed a design of decentralized biased dual mode controllers for load frequency Control of Interconnected Power Systems. The proposed controller was simple in structure and easy for implementation. LFC using BAT inspired algorithm based dual mode gain scheduling of PI controllers for interconnected power system was proposed in [156]. The simulation results show the point that the proposed bat inspired algorithm, based dual mode gain scheduling of PI controllers, provides better transient as well as steady state of response. Decentralized biased dual mode controllers for LFC of interconnected power systems considering GDB and GRC non-linearities was proposed in [157]. The closed loop system was simulated, and the frequency and tie line power deviations resulting from a step load disturbance were presented. The proposed model considered effects of nonlinearities in the design phase**.** Sathya and Ansari [158] have presented a LFC using BAT inspired algorithm based dual mode gain scheduling of PI controllers for interconnected power system. The model provided a better transient as well as steady state of response. Decentralised biased dual mode controllers for LFC of interconnected power systems considering governor dead band and generation rate constraint non-linearities was presented in [159].

### 3.7 LFC Based FACTS and Storage System.

The contribution or importance of the battery in the new power system is no longer demonstrated. Most of the renewable energy sources are weather dependant and not available at any time and the battery can be used to supply the load on time of unavailability of these sources. Chandrakala *et al.* [160] have presented a LFC of multi-source multi-area hydro thermal system using flexible alternating current transmission system (FACTS) devices. An impact of energy storage system on LFC for diverse sources of interconnected power system in deregulated power environment was presented in [161]. The proposed control mechanism has been analysed in a deregulated power environment with the help of different simulation case studies to find out improved dynamic performance over integral control strategies. LFC of an interconnected reheat thermal system using type-2 fuzzy system including SMES units was proposed in [162]. The performance of the Type-2 (T2) fuzzy controller is compared with optimal PID (Khamsum's optimal PID) controller and Fuzzy PI Controller (Type-1 Fuzzy) controller in the presence of GRC, BD and SMES. LFC in deregulated power system integrated with super SMES-Thyristors controlled phase shifters combination using adaptive neuro fuzzy system controller was proposed [163]. The dynamics of the proposed model was analysed with unilateral, bilateral and contract violation cases for a small load perturbation. The authors [164] have proposed a frequency stabilization of multi-area multi-source interconnected power system using TCSC and SMES mechanism. The step load perturbation (SLP) and random SLP are used for the dynamic performance analysis. An adaptive AGC with SMES in power systems

was presented in [165]. A comprehensive comparative performance evaluation of control schemes using adaptive and non-adaptive controllers in the main AGC and in the SMAES control loops was presented.

The effect of battery energy storage system (BESS) on LFC considering governor dead-band and GRC was presented [166]. Computer simulations shown that the BES is very effective in damping the oscillations caused by load disturbances. Control of a SMES for mitigating sub-synchronous oscillations in power systems: a PBC-PI approach was presented in [167]. The proposed methodology was assessed with a classical PI controller, feedback linearisation controller and a passivity-based PI control (PI-PBC). The authors [168] have presented an optimal sizing and control strategy of isolated grid with wind power and ESS. The optimal size of the ESS was determined by genetic algorithm and sequential simulation. The annualised cost considering the compensation cost of curtailed wind power and load is minimised when the reliability requirement can be satisfied. A comprehensive study of battery-supercapacitor hybrid ESS for standalone PV power system in rural electrification was proposed [169]. The existing hybrid ESSs and their corresponding energy management strategies vary in terms of topology, complexity and control algorithm which are often application oriented. Researchers [170] have proposed capacitive energy storage with optimised controller for frequency regulation in realistic multisource deregulated power system. In addition, the effectiveness of the sine-cosine algorithm tuned PI controller was also compared with the popular PSO algorithm. A self-interested distributed economic MPC approach to BES networks was proposed in [171]. To solve this problem, the dissipativity theory with dynamic supply rates was adopted in that paper to deal with the interactions between individual users and the MPM.

The authors [172] have proposed a LFC using storage system for a microgrid. A power storage system was used with photovoltaic generation and wind power generation. Storage as a flexibility option in power systems with high shares of variable renewable energy sources: a POLES-based analysis was presented in [173]. The innovative aspect of their work was the direct coupling between POLES and EUCAD, thus combining a long-term simulation horizon and a short-term approach for the power system operation. AGC with fuzzy logic controllers in the power system including SMES units was proposed in [174]. The zero steady-state error was obtained after sufficient delay time. The authors [175] have proposed a small-signal stability analysis for two area interconnected power system with load frequency controller in coordination with FACTS and energy storage device. The proposed control scheme consists of an integral controller in coordination with the redox flow energy storage system (RFESS) and the static synchronous series compensator (SSSC). Smart energy management algorithm for load smoothing and peak shaving based on load forecasting of an island's power system was proposed in [176]. The prediction module was based on a feedforward artificial neural network, capable of short term day ahead load forecasting. Impact of energy storage units on LFC of deregulated power systems was presented in [177]. The research proposed a new design of intelligent controller for LFC of interconnected deregulated power systems with ESS using artificial cooperative search algorithm. Control performance standards based load frequency controller considering redox flow batteries coordinate with interline power flow controller was

proposed in [178]. The redox flow batteries, which were not aged to the frequent charging and discharging, have a quick response and outstanding function during overload conditions.

Comparative performance evaluation of SMES–SMES, TCPS–SMES and SSSC–SMES controllers in AGC for a two-area hydro–hydro system was presented in [179]. To compensate for such load disturbances and stabilize the area frequency oscillations, the dynamic power flow control of SSSC or thyristors controlled phase shifters (TCPS) in coordination with SMES were proposed. The authors [180] have proposed relative merits of load following reserves and ESS market integration towards power system imbalances. The results show that load following reserves and ESS mitigate imbalances in fundamentally different ways. Optimisation and energy management of a standalone hybrid microgrid in the presence of BSS was proposed in [181]. In order to achieve optimal utilisation of renewable resources in a microgrid environment and system cost-effective operations, the effectiveness of a BSS unit was examined. The authors [182] have proposed the impact of hydrogen energy storage on California electric power system: Towards 100% renewable electricity. Novelty of the study was the assessment of hydrogen as the primary storage means for balancing energy supply and demand on a large scale. BES for LFC of an interconnected power system was proposed in [183]. Time domain simulations were used to study the performance of the power system and BES system. Frequency stabilization of multi-area multi-source interconnected power system using TCSC and SMES mechanism was presented in [184]. The SLP and random SLP were used for the dynamic performance analysis.

Researchers [185] have proposed the transient stability enhancement of wind farms connected to a multi-machine power system by using an adaptive ANN-controlled SMES. The control strategy of SMES depends mainly on a sinusoidal pulse width modulation (PWM) VSC and an adaptive ANN controlled DC–DC converter using insulated gate bipolar transistors (IGBTs). Frequency response services designed for energy storage was proposed in [186]. Novel statistical techniques have been devised to quantify the design and operational requirements of ESS providing frequency regulation services. Optimum BESS using PSO considering dynamic demand response for microgrids was presented in [187]. The optimum size of BESS was evaluated by PSO incorporating DR based on frequency control of the microgrid. The authors [188] have proposed an AGC of PV-thermal and hydro-thermal power systems using CES and a new multi-stage FPIDF-(1+PI) controller. Motivated by the fact that fuzzy control techniques display superior performance under volatile operating conditions in contrast to conventional control strategies. Optimization under uncertainty of a biomass-integrated renewable energy microgrid with energy storage was presented in [189]. As an illustrative example, a case study was examined for a conceptual utility grid-connected microgrid application in Davis, California. BESSs as a way to integrate renewable energy in small isolated power systems were proposed in [190]. The BESS was inserted in to the Unit Commitment and Economic Dispatch plat form and regarded as another dispatchable generator. Super-capacitor based energy storage system for improved LFC was proposed in [191]. The fuzzy controller for SCB was designed in such a way that the effects of load disturbances were rejected on a continuous basis.

Small-signal stability analysis for two-area interconnected power system with load frequency controller in coordination with FACTS and energy storage device was presented in [192]. The proposed control scheme consists of an integral controller in coordination with the RFESS and the SSSC. Placement and sizing of BES for primary frequency control in an isolated section of the Mexican power system was proposed in [193]. BESS location and size were determined according to the most severe contingency for generation outage and different penetration levels of converter based renewable generation in the test system. A hybrid DE–PS algorithm for LFC under deregulated power system with UPFC and RFB was proposed in [194]. The superiority of proposed hybrid differential evolution and Pattern search optimised MID controller over GA and DE techniques was demonstrate. LFC in deregulated power system integrated with SMES–TCPS combination using ANFIS controller was proposed in [195]. The implementation of SMES–TCPS combination arrests the initial fall in frequency as well as the tie line power deviations after a sudden load disturbance. The authors [196] have proposed a MPC strategy of PV-Battery microgrid under variable power generations and load conditions. In this paper, a microgrid with solar photovoltaic (PV) and BES was studied.

A SOC oriented charging scheme was developed to control the BES to smooth the PV output. Researchers [197] have proposed a battery aging in multi-energy microgrid design using mixed integer linear programming. The battery aging model and its integration into a larger microgrid sizing formulation were described. The authors [198] have proposed an intelligent coordinator design for GCSC and AGC in a two-area hybrid power system. With constant gains that are generally designed for fixed operating conditions, the outlined approach demonstrates robust performance. AGC with thyristors controlled series compensator including SMES units was proposed in [199]. After that performance of thyristors controlled series compensator (TCSC) has been investigated. AGC of a multi-area power system under deregulated environment using redox flow batteries and interline power flow controller was proposed in [200]. Additionally, to get an accurate insight of the AGC problem, important physical constraints were considered and the controller parameters have been retuned. $PI^2$ controller based coordinated control with redox flow battery and unified power flow controller (UPFC) for improved restoration indices in a deregulated power system was proposed in [201]. The evaluation of power system restoration indices based on the AGC assessment of interconnected power system in a deregulated environment was presented. Optimal design of MPC with SMES for LFC of nonlinear hydrothermal power system using bat inspired algorithm was introduced in [202]. The model was applied to simultaneously tune the parameters of MPC controller and SMES to minimise deviations of frequency and tie-line power flow of the interconnected. The authors in [203] have proposed the firefly algorithm optimized fuzzy PID controller for AGC of multi-area multi-source power systems with UPFC and SMES. The superiority of the proposed firefly algorithm optimised fuzzy PID controller has been demonstrated by comparing the results with some recently published approaches. Application of UPFC in interconnected power systems: modelling, interface, control strategy, and case study was introduced in [204]. The supplementary control of UPFC was added for damping power oscillation.

### 3.8 LFC based on Robust Model

Some robust controllers are presented in the literature. Toulabi *et al*. [205] have presented a robust decentralised PI and design of power system LFC using the Kharitonov's theorem in a multi-area. This theorem was used to determine the robustness margin. A robust method of tuning the feedback gains of a variable structure LFC controller using GA optimisation was presented in [206]. The authors have compared the system performance against step load variations with the conventional trial and error method. Khodabakhshian and Edrisi [207] have proposed a new robust PID load frequency controller. The proposed controller was straightforward and effective. A robust adaptive LFC for microgrids was presented in [208]. The simulations results prove the successfulness and effectiveness of the proposed method. Zhu *et al.* [209] have proposed a robust LFC with dynamic demand response for deregulated power systems considering communication delays. A robust PID-LFC controller was designed through the $H_\infty$ performance analysis and the PSO searching algorithm. Robust stability of networked LFC systems with time-varying delays was proposed in [210]. Using Lyapunov-Krasovskii functional approach, a less conservative stability criterion was presented to ascertain delay-dependent stability of such LFC systems. Tan and Xu [211] have proposed a robust analysis and design of load frequency controller for power systems. The proposed method took into account the un-modelled dynamics of power systems.

The research presented in [212] has proposed a robust analysis of decentralised LFC for multi-area power systems. A detailed structured singular value method was proposed for local-area robustness analysis and an eigenvalue method was derived for the tie-line robustness analysis. The authors in [213] have proposed a robust decentralised LFC of interconnected power system with generation rate constraint using type-2 fuzzy approach. The performance of fuzzy type-2 was compared with the conventional controller and type-1 fuzzy controller with regard to generation rate constraint. Robust $H_\infty$ LFC in hybrid DG system was presented in [214]. The PSO based loop shaping of $H_\infty$ controller was used and compared with those obtained with GA to minimise the frequency deviation. Robust decentralised LFC using an iterative linear matrix inequalities algorithm was presented in [215]. The model was formulated as an $H\infty$-control problem and is solved using an iterative linear matrix inequalities algorithm to design of robust PI controllers in the multi-area power systems. A robust PID controller based on imperialist competitive algorithm for LFC of power systems was introduced in [216]. A new PID controller for resistant differential control against load disturbance is introduced that can be used for LFC application. The authors [217] have proposed a fuzzy C-Means clustering for robust decentralized LFC of interconnected power system with GRC. The simple and efficient clustering algorithms permit the classification of the data in distinct groups using distance and/or similarity functions.

Sun *et al*. [218] have proposed a robust $H_\infty$ LFC of delayed multi-area power system with stochastic disturbances. Based on Lyapunov stability theory, several less conservative stability conditions was developed in the form of linear matrix inequalities to ensure the frequency stability of multi-area power system. A FL approach based robust LFC for uncertain nonlinear

power systems was introduced in [219]. Sufficient conditions for the robust asymptotic convergence of the frequency deviation are then provided in terms of linear matrix inequalities. Ahmadi and Aldeen [220] have introduced a robust overlapping load frequency output feedback control of multi-area interconnected power systems. The overlapping LFC design was based on the expansion-contraction principles. The research in [221] introduced a robust PI control of smart controllable load for frequency stabilisation of microgrid power system. To guarantee the robustness of the proposed PI controller, an inverse additive perturbation was formulated as an optimisation problem. The research in [222] proposed a robust LFC scheme for power systems based on second order sliding mode and extended disturbance observer. The merits of the scheme include faster response speed, stronger robustness against disturbances arising from power system parameter errors and unmodelled dynamics. The authors in [223] have proposed a decentralised model based on a new robust optimal multiple input and single output PID controller. The proposed model supports a trade-off between acceptable and desired performance and robustness at the same time.

Chidambaram and Velusami [224] have proposed a design of decentralised biased controllers for LFC of interconnected power systems. According to the proposed method the biased controllers were less sensitive to the changes in system parameters. The research in [225] has proposed a design of a new market structure and robust controller for the frequency regulation service in the deregulated power system. The dynamic performance of the charged-bilateral structure is analysed through a simulation of a step load disturbances to examine its regulation capabilities for normal operating load contract violation issues. Patra *et al.* [226] have proposed a design of robust load frequency controller $H_\infty$ loop shaping approach. The real $\mu$-analysis was adopted to ensure the robust stability of system. The design of a fractional order PID controller using gases Brownian motion optimisation algorithm for LFC with governor saturation consideration was proposed in [227]. Based in time domain, the performance and robustness of the model was verified. The research in [228] proposed a design of a robust LFC using sequential quadratic programming technique. The robustness of the proposed controller was compared with that of a conventional PI controller. A FL based fine-tuning approach for robust LFC in a multi-area power system was presented in [229]. The model performance was compared with two extra robust methods. A fuzzy sliding model LFC of multi-area interconnected power systems was proposed in [230]. Simulation results show that the presented algorithm was simple, effective and ensure that the overall system is asymptotically stable. LFC problem in interconnected power systems using robust fractional $PI^{\lambda}D$ controller was proposed in [231]. The controller parameters were tuned through a new evolutionary algorithm known as differential evolution. A robust adaptive load frequency control for microgrids was proposed in [232]. A new combination of the General Type II Fuzzy Logic Sets and the modified harmony search algorithm technique is applied for adaptive tuning of PI controller.

Another robust controller design of SSSC for stabilisation of frequency oscillations in interconnected power systems was presented in [233]. To implement this concept, the robust design method of the lead/lag controller equipped with the SSSC was proposed. Robust

decentralized LFC of interconnected power system with GRC using Type-2 fuzzy approach was presented in [234]. The performance of the Type-2 (T2) controller was compared with conventional controller and Type-1 (T1) fuzzy controller with regard to GRC. LMI based robust LFC for time delayed power system via delay margin estimation was presented in [235]. The robust controller gains are ultimately obtained with the estimated delay margin and a binary search technique which aims to find the minimum value of RPI. Research [236] proposed a robust load frequency regulation real time laboratory experiment. In the proposed methodology, the LFC problem was reduced to a static output feedback control synthesis for a multiple delays power system, and then the control parameters are easily carried out using robust $H\infty$ control technique. Decentralized robust adaptive output feedback controller for power system LFC was presented in [237]. An adaptive observer was designed to estimate the state variables and system parameters using local data. LFC based on differential evolution optimised parallel 2-DOF PID controller was presented in [238]. It was observed that the proposed controllers are quite robust for a wide range of the system parameters and operating load conditions from their nominal values. A model based on adaptive optimal gain scheduling for the LFC problem was presented in [239]. The obtained gains were used to train the adaptive network-based fuzzy inference system. Another adaptive decentralised LFC of multi-area power systems was proposed in [240]. The control scheme guarantees that the fluctuations of the LFC converge to a range, which can be made very small.

## 4. Model Predictive Control Strategy

The algorithm named Model Predictive Control (MPC) belongs to a category of modern control algorithms that computes in a sequential manner using adjustments of manipulated variables to optimise and predict the future behaviour of the system, shows in Figure 5. MPC is considered as one of the advanced control techniques in the control area [241–243]. Its theoretical development over years can be seen by the amount of research available in the literature. With regards to the solution of LFC problem in power networks, some research results can be found in the literature.

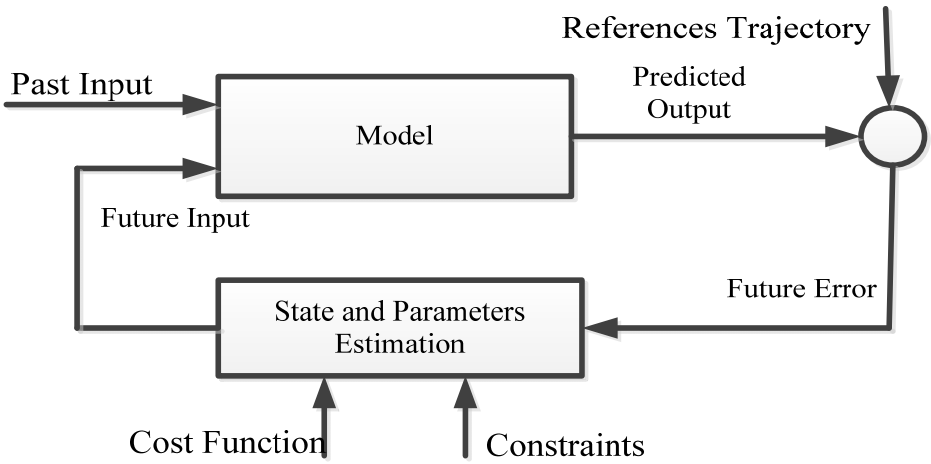


**Figure 5: Model predictive control strategy [249]**

### 4.1 Predictive Control Strategies

Considering the imbalance uncertainty in the power system, a predictive load frequency control model was presented in [241]. The presented model was based on the simplified system model that was updated using the Kalman algorithm for estimation of state and parameter considering the tie-line flow limit. The second model incorporating tie-line power flow limit, the capacity of generation units, and their change rate was proposed in [244]. According to this research, considering certain problems of LFC, the MPC is a more realistic solution to the issues that power systems are dealing with nowadays. A model predictive LFC was presented in [245]. The proposed simplified MPC model took into account the existing network configuration and the power flow limitation in the tie-lines. Kassem [246] has proposed a model predictive controller based on a neural network of a two microgrids LFC for improving the power grid dynamic performance. The effectiveness of the presented approach was demonstrated over an LFC using a FL controller. Table 1 summarises some of the MPC models used to solve LFC problem in power system. Khalid and Savkin [247] have proposed LFC based MPC for an optimal control of wind BESS. A model based on the prediction of frequency using Grey theory was also designed to optimise the performance of the basic predictive controller. An economic aspect included in MPC to solve the LFC in one control area that was presented in [248]. The authors have proposed an operation cost reduction approach considering an order of magnitude similar to those based on the difference ratio of two set points MPC and PI controller. Active power control of two microgrids interconnected via two alternating current tie-lines was proposed [249]. Three different cases were introduced in the studied system to show the effectiveness of the model.

Sokoler *et al*. [250] have proposed an application of an economic MPC for LFC considering a single area power system. The optimal operation control problem directly includes all the operating costs into its objectives function. Power system MPC-LFC was presented in [251]. The authors have modelled the limit of governor valve using the fuzzy logic method and the local model predictive controllers were included into a nonlinear control system strategy. MPC based LFC design concerning wind turbines was introduced in [252–253]. The proposed model introduced the fast response of frequency of a connected area power system taking into account WTs generation. Zhang *et al*. [254] have proposed an MPC for a reliable LFC with WTs. The algorithm used has reduced the impact of the randomness and intermittency of wind turbines effectively. Zheng *et al*. [255] have presented a design of a multi-mode intelligent MPC control strategy for hydroelectric generating unit. The model was built on the basis of a tree seed algorithm and the stability guaranteed measures into rolling optimisation mechanism of nonlinear MPC to replace the existing complex numerical differential geometric solutions. A functional MPC approach for power system LFC considering GRC was proposed in [256]. To alleviate computational effort and to reduce numerical problems, particularly in large prediction horizon, an exponentially weighted functional MPC was employed. A model predictive based LFC design concerning wind turbines was introduced in [257]. Each local area controller was designed independently such that stability of the overall closed loop system was

guaranteed. Frequency stabilisation of renewable power systems based on MPC with application to the Egyptian grid was presented in [258]. The proposed technique provided stabilisation of renewable power systems with inherent nonlinearities.

### 4.2 Distributed MPC

Distributed model predictive LFC is one of the techniques used on control of the frequency control. The overall system can be decomposed into several subsystems and each has its own local area MPC controller. Liu et al. [259] have presented a distributed model predictive control for active load frequency control with dynamic fuzzy valve position modelling for hydro-thermal power system. The limit position of the governor valve was modelled by fuzzy model and the local predictive controllers, simulations results were successful. Another distributed model for predictive LFC of multi-area power system after deregulation was proposed in [260]. The authors took into account the effect of bilateral contracts on the dynamics. The authors [261] have presented a distributed MPC-LFC of multi-area power system with DFIGs. A performance comparison between the proposed controller with and without the participation of the wind turbines was carried out. Analysis and simulation results have shown possible improvements on closed loop performance, and computational burden with the physical constraints.

Coordinated distributed MPC for LFC of power system with wind farms was proposed in [262]. Both simulation and experimental tests of a four-area interconnected power system LFC, which consists of thermal plants, hydro units, and a wind farm, demonstrate the improved efficiency of the coordinated DMPC. LFC of multi-interconnected area power system using a distributed model predictive was proposed in [263]. Analyses of results from three interconnected power system networks have shown some improvements, robustness and the computational burden was shown in the performance of closed-loop. Distributed MPC strategies including application to LFC in the electrical network was proposed in [264]. The distributed approach framework realises the performance similar to centralised MPC. Distributed LFC based MPC of multi-area power grids after deregulation was introduced in [265]. Considering the frequency control problem as a dynamic control problem this model was designed based on the distributed model predictive considering external disturbances and the limit of active power generation constraints. Ma *et al*. [266] have presented a distributed model predictive LFC of multi-area interconnected power system. The dynamics model of multi-area interconnected was introduced and GRC and load reference set point constraint were considered.

Table 1 gives some MPC based LFC strategies. Two models based on decentralised models were proposed in [267-268]. Mohamed *et al*. [267] have presented a decentralised MPC based LFC in an interconnected power system. The results have shown that considering the proposed predictive method the overall performance of the closed-loop technique has demonstrated robustness in the load disturbance condition. Decentralised MPC based LFC in a tough situation for deregulated power systems was proposed in [268]. The effectiveness of the

proposed model has been shown using different scenarios on interconnected power system models.

**Table 1: MPC based LFC strategies**

| MPC LFC Solutions | | |
|---|---|---|
| **MPC model** | **Areas** | **References** |
| **Distributed model based state variables** | 4 | [270] |
| **Distributed model based Simulink** | 2; 3 and 4 | [243],[254],[263] |
| **Decentralised model based Simulink** | 3 | [267],[20] |
| **Nonlinear model based Simulink** | 2 and 3 | [264],[267],[268] |
| **Predictive active control** | 2 | [249] |
| **Robust multivariable based Simulink** | 3 | [265] |
| **Supervisory MPC based Simulink** | 4 | [251] |
| **Bat Inspired Algorithm based Simulink** | 2 | [242] |
| **Economic MPC based state variable** | 1 | [248] |
| **Robust nonlinear based state variables** | 1 | [244],[245] |

### 4.3 Robust MPC

Taking into account the time delays or time varying in the communication network and the uncertainties of parameters the authors of [269] have presented a robust predictive LFC. The goal of their research was achieved by a good performance of the closed-loop control system, considering the practical problems of the power system network. Ersdal *et al*. [270] have proposed a MPC for power grid LFC when considering the imbalance uncertainty. Based on the simulations performed on the power system with a high number of wind generation integrated, it was shown that in certain cases in which the state of the art LFC applying PI controller and normal MPC have failed by violating the constraints of the system while the robust MPC fulfils all these constraints. Shiroei and Ranjbar [271] have proposed a robust predictive control model based LFC taking into account the generation limit constraints. The authors took into account the uncertainty and parameter variations and the proposed model was robust. Robust distributed MPC for LFC of uncertain power systems was introduced in [272]. The proposed algorithm solved a series of local convex optimisation problems to minimise an attractive range for a robust performance objective by using a time-varying state-feedback controller for each control area.

## 5. Summary and Future Work

### 5.1 Summary

- The present paper gave the comprehensive literature reviews concerning the load frequency control. The recent issues and challenges faced by these controllers as well as by the power system in order to maintain the frequency of the system to nominal

values and to maintain the voltage and active power profile within predetermined limits were also reviewed in this paper.

- The integration of fluctuating energy sources like the solar and wind power with energy storage devices improve the reliability of the system as well as the quality of power delivered to the consumers. The frequency control is a major issue in the power system operation and control and lot of advanced control strategies have been developed over the last decades in order to improve the frequency control of the power system. Therefore, further efforts are required to design frequency control strategies which can take into account the dynamics of microgrids if these are grid connected.
- The frequency control is a major issue in the power system operation and control and lot of advanced control strategies have been developed over the last decades in order to improve the frequency control of the power system. However, there is a growing trend to develop microgrids which may be operated in grid connected or isolated mode. The microgrids essentially have unpredictable renewable sources of energy besides storage. Therefore, further efforts are required to design frequency control strategies which can take into account the dynamics of microgrids if they are grid connected.
- The growing penetration of the renewable energy resources into the power system is also a point of concern for frequency control of the power system design and operation. The existing frequency control problem does not take into account the renewable sources of energy such as wind and solar power, etc. Until now, most of the renewable energy sources integrated into the power system do not participate in frequency control of the power system. However, with the growing penetration of such sources, their dynamic participation in the design of frequency control of the power system needs to be explored.
- In practice the conventional control strategies, such as PI and PID algorithms, are the most applied for load frequency control in power system plant. When taking into account the external disturbances in the power system, the conventional controllers could not guarantee a good performance. Numbers of controllers are proposed and can be found in the literature. The weakness of most of them can be summarised by the conventional controllers applied to the nonlinear system, most of the time there are dependent on the mathematical model of the plant. Various disturbances can be added to these drawbacks: uncertainty based on load power variation, error, modelling and various modification of network physical structure. Taking into account the integration of renewable energy sources in the network and all the structure modification in the modern power system, it is necessary to introduce new control models.

### 5.2 Future Scope

- The integration of fluctuating energy sources like solar and wind power with energy storage devices improves the reliability of the system as well as the quality of power delivered to the consumers. The frequency control is a major issue in the power system

operation and control and lot of advanced control strategies have been developed over the last decades in order to improve the frequency control of the power system. Therefore, further efforts are required to design frequency control strategies, which can take into account the dynamics of microgrids, if these are grid connected.

- The growing penetration of the RER is also a concern for frequency control of the power system design and operation. The existing frequency control problem does not take into account the renewable sources of energy such as wind and solar power, etc. Till date solar energy sources do not participate in frequency control of the power system. However, with growing penetration of such sources, their dynamic participation in the design of frequency control of the power system needs to be explored.

**Acknowledgement**

This research is supported partially by South African National Research Foundation Grants (No. 112108 and 112142), and South African National Research Foundation Incentive Grant (No. 95687), Eskom Tertiary Education Support Programme, Research grant from URC of University of Johannesburg.

## References

[1] N. Jaleeli, L.S. Vanslyck, D.N. Ewart, L.H. Fink, and A.G. Hoffmann, "Understanding automatic generation control", *IEEE Transaction on Power Systems*, vol. 7, no. 3, pp. 1106-1122, August 1992.

[2] W. Zhang, and K. Fang, "Controlling active power of wind farms to participe in load frequency control of power systems", *IET Gener Transm Distrid*, vol. 11, no. 9, pp. 3194-2203, 2017

[3] D.H. Tungadio, "*Optimal active power control of microgrids interconnected to a power system*", PhD thesis, University of Pretoria, 2018.

[4] D.H. Tungadio, R.C. Bansal , and M.W. Siti, "Optimal control of active power of two microgrids interconnected with two ac tie-lines", *Electric Power Components and System*, vol. 45, no. 19, pp. 2188-2199, 2017.

[5] H. Shayeghi, H.A. Shayanfar, and A. Jalili, "Load frequency control strategies: A state-of-the-art survey for the researcher", *Energy Conversion and Management*, vol. 50, pp. 344-353, 2009.

[6] D.H. Tungadio, R.C. Bansal, and M.W. Siti, "Energy flow estimation-control of two interonnected microgrids", *Journal of Energy in Southern Africa*, vol. 29, no. 4, pp. 69-80, 2018

[7] S. Doolla, T.S. Bhatti, and R.C. Bansal, "Load frequency control of an isolated small hydro power plant using multi pipe scheme", *Electric Power Components and Systems,* vol. 39, no. 1, pp. 46–63, 2011.

[8] N. Kang, and Y. Liao, "Contingency studies of a real power system and violation mitigation measures", *International Review on Modelling and Simulation*, vol. 3, no. 5, pp. 882–887, 2010.

[9] M. Mehrasa, E. Poursemaeil, B. N. Jorgensen, and J. P. S. Catalao, "A control plan for the stable operation of microgrids during grid-connected and islanded modes", *Electric Power Systems Research*, vol. 129, pp. 10–22, 2015.

[10] D.E. Olivares, A.M. Sani, A.H. Etemadi, C. A. Canizares, R. Iravani, M. Kazerani, A.H. Hajimiragha, O.G. Bellmunt, M. Saeedifard, R. P. Behnke, G. A. J. Estevez, and N.D.H. Gyriou "Trends in microgrids control'', *IEEE Trans. Smart Grid*, vol. 5, no. 4, pp. 1905–1919, July 2014.

[11] K.P.S. Parmar, S. Majhi, and D.P. Kothari, "Load frequency control of a realistic power system with multi-source power generation", *Int. J. Electrical Power and Energy Systems*, vol. 42, pp. 426–433, 2012.

[12] D.Q. Hung, N. Mithulananthan, and R. C. Bansal, "Integration of PV and BES units in commercial distribution systems considering energy loss and voltage stability", *Applied Energy,* vol. 113, pp. 1162–1170, 2014.

[13] R. Majumder, A. Ghosh, G. Ledwich, and F. Zare, "Load frequency control for rural distributed generation", *Electric Power Components and Systems,* vol. 38, no. 6, pp. 637–656, April 2010.

[14] C. Yuen, A. Oudalov, and A. Timbus, "The provision of frequency control reserves from multiple microgrids", *IEEE Trans. Industrial Electronics*, vol. 58, no. 1, Jan. 2011.

[15] P.M. Costa and M.A. Matos, "Assessing the contribution of microgrids to the reliability of distribution networks", *Electric Power Systems Research*, vol. 79, pp. 382–389, 2009.

[16] J. Zhao, and F. Dorfler, "Distributed control and optimisation in DC microgrids", *Automatica*, vol. 61, pp. 18–26, 2015.

[17] N. Nikmehr, and S.N. Ravadanegh, "Reliability evaluation of multi-microgrids considering optimal operation of small scale energy zones under load-generation uncertainties", Int. J. Electrical Power and Energy Systems, vol. 78, pp. 80–87, 2016.

[18] P. Kundur, *Power system stability and control*, In: McGraw-Hill; New York; 1994.

[19] M. Goyal, and A. Ghosh, "Microgrids interconnection to support mutually during any contingency", *Sustainable Energy, Grids and Networks*, vol. 6, pp. 100–108, 2016.

[20] D.H. Tungadio, and R.C. Bansal, "Active power reserve estimation of two interconnected microgrids", *Energy Procedia*, vol. 105, pp. 3909-3914, 2017.

[21] Q. Fu, A. Nasiri, A. Solanki, A.B. Ahmed, L. Weber, and V. Bhavaraju, "Microgrids: architecture, controls, protection and demonstration", *Electric Power Components and Systems*, vol. 43, no. 12, pp. 1453 – 1465, July 2015.

[22] Md.N. Anwar, and S. Pan, "A new PID load frequency controller design method in frequency domain through direct synthesis approach", *Int. J. Electrical Power and Energy Systems*, vol.67, pp.560-569, 2015.

[23] S. Saxena, and Y.V. Hote, "Decentralized PID load frequency control for perturbed multi-area power systems", *Int. J. Electrical Power and Energy Systems*, vol. 81, pp. 405-415, 2016.

[24] C. Peng, and J. Zhang, "Delay-distribution-dependent load frequency control of power systems with probabilistic interval delays", *IEEE Transactions on Power Systems*, vol. 31, no. 4, pp. 3309-3317, 2016.

[25] S. Debbarma, L.C. Saikia, and N. Sinha, “Automatic generation control using two degree of freedom fractional order PID controller”, *Int. J. of Electrical Power and Energy Systems*, vol. 58, pp. 120-129, 2014.

[26] D. Guha, P.K. Roy, and S. Banerjee, “Optimal tuning of 3 degree of freedom proportional integral derivative controller for hybrid distributed power system using dragonfly algorithm”, *Computers and Electrical Engineering*, vol. 72, pp. 137-153, 2018.

[27] M. Zamani, M.K. Ghartemani, N. Sadati, and M. Parniani, “Design of a fractional order PID controller for an AVR using particle optimisation”, *Control Engineering Practice*, vol. 17, pp. 1380-1387, 2009.

[28] C.S.A. Nandar, “Robust PI control of smart controllable load frequency stabilisation of microgrid power system”, *Renewable Energy*, vol. 56, pp. 16-23, 2013.

[29] S.A. Taher, M.H. Fini, and S.F. Aliabadi, “Fractional order PID controller design for LFC in electric power systems using imperialist competitive algorithm”, *Ain Shams Engineering Journa*l, vol. 5, pp. 121-135, 2014.

[30] S.D. Hanwate, and Y.V. Hote, “Optimal PID design for load frequency control using QRAWCP approach”, *IFAC PapersOnLine*, vol. 51, no. 4, pp. 651-656, 2018.

[31] Z.Y. Zhao, M. Tomizuka, and S. Isaka, “Fuzzy gain scheduling of PID controllers” IEEE Transactions on Systems, Man and Cybernetics, vol. 23, no. 5, pp.1392-1398, September 1993.

[32] B.P. Sahoo, and S. Panda, “Improved grey wolf optimisation technique for fuzzy aided PID controller design for power system frequency control”, *Sustainable Energy, Grids and Networks*, vol. 16, pp. 278-299, 2018.

[33] E.S. Ali, and S.M. Abd-Elazim, “BFOA based design of PID controller for two area load frequency control with nonlinearities”, *Int. J. Electrical Power and Energy Systems*, vol. 51, pp. 224-231, 2013.

[34] S. Doolla, T.S. Bhatti, and R.C. Bansal, “Load frequency control of an isolated small hydro power plant using multi pipe scheme”, *Electric Power Components and Systems,* vol. 39, no. 1, pp. 46–63, 2011.

[35] M. J. Hossain, M.A. Mahmud, F. Milano, S. Bacha, and A. Hably, “Design of robust distributed control for interconnected microgrids”, *IEEE Transactions on Smart Grid*, vol. 7, no. 6, pp. 2724-2735, Dec. 2015.

[36] A. Zamani, S.M. Barakati, and S.Y. Darmian, “Design of a fractional order PID controller using GBMO algorithm for load frequency control with governor saturation consideration”, *ISA Transactions*, vol. 64, pp.59-66, 2016.

[37] K. Jagatheesam, B. Anand, and M. Omar, “Design of proportional-integral-derivative controller using ant colony optimisation technique in multi-area automatic generation control", *Int. J. Electrical Engineering and Informatics*, vol. 7, no. 4, pp. 541-558, 2015.

[38] A. Khodabakhshian, and R. Hooshmand, “A new PID controller design for automatic generation control of hydropower system”, *Int. J. Electrical Power and Energy Systems*, vol. 32, vol. 32, pp.375-382, 2010.

[39] X. Li, Y.J. Song and S.B. Han, "Frequency control in microgrid power system combined with electrolyser system and fuzzy PI controller", *Journal of Power Sources*, vol. 180, pp. 468–475, 2008.

[40] S. Pothiya, and I. Ngamroo, "Optimal fuzzy logic-based PID controller for load-frequency control including superconducting magnetic energy storage units", *Energy Conversion and Management*, vol. 49, pp. 2833–2838, 2008.

[41] E. Yesil, M. Guzelkaya, and I. Eksin, "Self-tuning fuzzy PID type load and frequency controller", *Energy Conversion and Management*, vol. 45, pp. 377 – 390, 2004.

[42] T. Vigneysh, and N. Kumarappan, "Autonomous operation and control of photovoltaic/solid oxide fuel cell/battery energy storage based microgrid using fuzzy logic controller", *Int. J. of Hydrogen Energy*, vol. 41, pp. 1877–1891, 2016.

[43] S. Ahmadi, S. Shokoohi, and H. Bevrani, "A fuzzy logic-based droop control for simultaneous voltage and frequency regulation in an AC microgrid", *Int. J. of Electrical Power and Energy Systems*, vol. 64, pp. 148–155, 2015.

[44] Y. Arya, and N. Kumar, "Fuzzy gain scheduling controllers for automatic generation control of two-area interconnected electrical power systems", *Electric Power Components and Systems*, vol. 44, no. 7, pp. 737–751, 2016.

[45] J. Fattahi, H. Schriemer, B. Bacque, R. Orr, K. Hinzer, "High stability adaptive microgrid control method using fuzzy logic", *Sustainable Cities and Society*, vol. 25, pp. 57–64, 2016.

[46] M. Khederzadeh, and H. Maleki, "Frequency control of microgrids in autonomous mode by a novel control scheme based on droop characteristics", *Electric Power Components and Systems*, vol. 41, no. 1, pp. 16–30, 2013.

[47] B.K. Sahu, T.K. Pati, J.R. Nayak, S. Panda, S.K. Kar, "A novel hybrid LUS-TLBO optimised fuzzy-PID controller for frequency control of multi-source power system", *Int. J. Electrical Power and Energy Systems*, vol. 74, pp. 58-69, 2016.

[48] X. Liu, X. Kong, and K.Y. Lee, "Distributed model predictive control for load frequency control with dynamic fuzzy valve position modelling for hydro-thermal power system", *IET Control Theory and Appl*.,vol. 10, no. 14, pp. 1653-1664, 2016.

[49] S. Kayalvizhi, and D.M.V Kumar, "Load frequency control of an isolated microgrid using fuzzy adaptive model predictive control", *IEEE Access*, vol. 5, pp. 16241-16251, 2017.

[50] D.K. Chaturvedi, R. Umrao, and O.P. Malik, "Adaptive polar fuzzy based load frequency controller", *Int. J. Electrical Power and Energy Systems*, vol. 66, pp. 154-159, 2015.

[51] H. Yousef, "Adaptive fuzzy logic load frequency control of multi-area power system", *Int. J. Electrical Power and energy Systems*, vol. 68, pp. 384-395, 2015.

[52] H.A. Yousef, K. Al-Kharusi, M.H. Albadi, and N. Hosseinzadeh, "Load frequency control of a multi-area power system: An adaptive fuzzy logic approach", *IEEE Transactions on Power Systems*, vol. 29, no. 4, pp. 1822-1830, 2014.

[53] Z.A. Obaid, L.M. Cipcigan, M.T. Muhssin, "Fuzzy hierarchal approach-based optimal frequency control in the Great Britain power system", *Electric power Systems research*, vol. 141, pp. 529-537, 2016.

[54] I. Kocaarslan, and E. Cam, "Fuzzy logic controller in interconnected electrical power systems for load-frequency control", *Int. J. Electrical Power and energy Systems*, vol. 27, pp. 542-549, 2005.

[55] K. Sabahi, S. Ghaemi, and M. Badamchizadeh, "Designing an adaptive type-2 fuzzy logic system load frequency control for a nonlinear time-delays power system" *Applied Soft Computing*, vol. 43, pp. 97-106, 2016.

[56] E. Cam, and I. Kocaarslan, "Load frequency control in two area power systems using fuzzy logic controller", *Energy Conversion and Management*, vol. 46, pp. 233-243, 2005.

[57] A. Abazari, M.G. Dozein, and H. Monsef, "An optimal fuzzy-logic based frequency control strategy in a high wind penetrated power system", *Journal of the Franklin Institute*, vol. 355, pp. 6262-6268, 2018.

[58] S. Ahmadi, S. Shokoohi, and H. Bevrani, "A fuzzy logic-based droop control for simultaneous voltage and frequency regulation in an AC microgrid", *Int. J. Electrical Power and energy Systems*, vol. 64, pp. 148-155, 2015.

[59] T. Vigneysh, and N. Kumarappan, "Autonomous operation and control of photovoltaic/ solid oxide fuel cell/battery energy storage based microgrid using fuzzy logic controller", *Int. J. of Hydrogen Energy*, vol. 41, pp. 1877-1891, 2016.

[60] N.G.M. Thao, and K. Uchida, "A two-level control strategy with fuzzy logic for large scale photovoltaic farms to support grid frequency regulation", *Control Engineering Practice*, vol. 59, pp. 77-99, 2017.

[61] I. Kocaarslan, and E. Cam, "Fuzzy logic controller in interconnected electrical power systems for load frequency control", *Electrical Power and Energy Systems*, vol. 27, pp. 542-549, 2005.

[62] K.R. Sudha, and R.V. Santhi, "Load frequency control of an interconnected reheat thermal system using Type-2 fuzzy system including SMES units", *Int. J. Electrical Power and energy Systems*, vol. 43, pp. 1383-1392, 2012.

[63] S. Ahmadi, S. Shokoohi, and H. Bevrani, "A fuzzy logic based droop control for simultaneous voltage and frequency regulation in an AC microgrid", *Int. J. Electrical Power and energy Systems*, vol. 64, pp. 148-155, 2015.

[64] H. Yousef, "Adaptive fuzzy logic load frequency control of multi-area power system", *Int. J. Electrical Power and energy Systems*, vol. 68, pp. 384-395, 2015.

[65] E. Cam, and I. Kocaarslan, "Load frequency control in two area power systems using fuzzy logic controller", *Energy Conversion and Management*, vol. 46, pp. 233-243, 2005.

[66] E. Cam, "Application of fuzzy logic for load frequency control of hydroelectrical power plants", *Energy Conversion and Management*, vol. 48, pp. 1281-1288, 2007.

[67] S. Pothiya, and I. Ngamroo, "Optimal fuzzy logic-based PID controller for load-frequency control including superconducting magnetic energy storage units", *Energy Conversion and Management*, vol. 49, pp. 2833-2838, 2008.

[68] H. Shayaghi, A. Jalili, and H.A. Shayanfar, "Multi-stage fuzzyload frequency control using PSO", *Energy Conversion and Management*, vol. 49, pp. 2570-2580, 2008.

[69] P.S. Devi, R.V. Santhi, and D.V. Pushpalatha, "Introducing LQR-fuzzy technique with dynamic demand response control loop to load frequency control model", *IFAC-PapersOnLine*, vol. 49, no. 1, pp. 567-572, 2016.

[70] T. Mahto, and V. Mukherjee, "A novel scaling factor based fuzzy logic controller for frequency control of an isolated hybrid power system", *Energy*, vol. 130, pp. 339-350, 2017.

[71] Z.A. Obaid, L.M. Cipcigan, and M.T. Muhssin, "Fuzzy hierarchical approach-based optimal frequency control in the Great Britain power system", *Electrical Power and Energy Systems*, vol. 141, pp. 529-537, 2016.

[72] R.K. Sahu, S. Panda, N.K. Yegireddy, "A novel hybrid DEPS optimised fuzzy PI/PID controller for load frequency control of multi-area interconnected power systems", *Energy Conversion and Management*, vol. 24, pp. 1596-1608, 2014.

[73] Y. Krim, D. Abbes, S. Krim, and M.F. Mimouni, "Intelligent droop control and power management of active generator for ancillary services under grid instability using fuzzy logic technology", *Control Engineering Practice*, vol. 81, pp. 215-230, 2018.

[74] S. Prakash, and S.K. Sinha, "Simulation based neuro fuzzy hybrid intelligent PI control approach in four-area load frequency control of interconnected power system", *Applied Soft Computing*, vol. 23, pp. 152-164, 2014.

[75] J. Talaq, and F. Al-Basri, "Adaptive Fuzzy gain scheduling for load frequency control", *IEEE Transactions on Power systems*, vol. 14, no. 1, pp. 145-150, February 1999.

[76] H. Bevrani, F. Habibi, P. Babahajyani, M. Watanabe, and Y. Mitani, "Intelligent frequency control in AC microgrid: Online PSO-based fuzzy tuning approach", *IEEE Transactions on Smart Grid*, vol. 3, no. 4, pp. 1935–1944, 2012.

[77] R.K. Sahu, S. Panda, and G.T.C. Sekhar, "A novel hybrid PSO-PS optimised fuzzy PI controller for AGC in multi area interconnected power systems", *Int. J. of Electrical Power and Energy Systems*, vol. 64, pp. 880-893, 2015.

[78] S.S. Dhillo, J.S. Lather, and S. Marwaha, "Multi area load frequency control using particle swarm optimisation and fuzzy rules", *Procedia Computer Science*, vol. 57, pp. 460-472, 2015.

[79] A.K. Barisall, and S. Mishra, "Improved PSO based automatic generation control of multi-source nonlinear power systems interconnected by AC/DC links", *Cogent Engineering*, vol. 5, pp. 1-20, 2018.

[80] S. Panda, and N.K. Yegireddy, "Automatic generation control of multi-area power system using multi-objective non-dominated sorting genetic algorithm-II", *Int. J. of Electrical Power and Energy Systems*, vol. 53, pp. 54-63, 2013.

[81] S. Ramesh, and A. Krishnan, "Modified genetic algorithm based load frequency controller for interconnected power systems", *Int. J. of Electrical and Power Engineering*, vol. 3, no. 1, pp. 26-30, 2009.

[82] D. Rerkpreedapong, A. Hasanovic, and A. Feliachi, "Robust load frequency control using genetic algorithms and linear matrix inequalities", *IEEE Transactions on Power Systems*, vol. 18, no. 2, pp. 855-861, May 2003.

[83] S.K. Aditiya, and D. Das, "Design of load frequency controllers using genetic algorithm for two area interconnected hydro power system", *Electric Power Components and Systems*, vol. 31, pp. 81-94, 2003.

[84] C.S. Chang, W. Fu, and F. Wen, "Load frequency control using genetic algorithm based fuzzy gain scheduling of PI controllers", *Electric Power Components and Systems*, vol. 26, no. 1, pp. 39-52, 1998.

[85] F. Daneshfar, and H. Bevrani, "Multiobjective design of load frequency control using genetic algorithms, *Int. J. of Electrical Power and Energy Systems*, vol. 42, pp. 257-263, 2012.

[86] C.S. Chang, W. Fu, and F. Wen, "Load frequency control using genetic-algorithm based fuzzy gain scheduling of PI controllers", *Electric. Power Components and Systems*, vol. 26, no. 1, pp. 39-52, 1998.

[87] Z.M. Al-Hamouz, and H.N. Al-Duwaish, "A new load frequency variable structure controller using genetic algorithms", *Electric Power Systems Research*, vol. 55, pp. 1-6, 2000.

[88] S.P. Ghoshal, "Application of GA/GA-SA based fuzzy automatic generation control of a multi-area thermal generating system", *Electric Power Systems Research*, vol. 70, pp. 115-127, 2004.

[89] A.G. Bakirtizis, M.J.B. Thecharis, M.S.J. Kiartzis, and K.J. Satsios, "Short term load forecasting using fuzzy neural networks", IEEE Transactions on Power Systems, vol. 10, no. 3, pp.1518-1524, August 1995.

[90] D. Guha, P.K. Roy, S. Banejere, "Load frequency control of interconnected power system using grey wolf optimisation", *Swarm and Evolutionary Computation*, Vol. 27, pp. 97-115, 2016.

[91] G. Sharma, I. Nasiruddin, K. R. Niazi, and R.C. Bansal, "Optimal AGC of a multi-area power system with parallel AC/DC tie lines using output vector feedback control strategy", *Int. J. Electrical Power and Energy Systems*, vol. 81, pp. 22–31, 2016.

[92] A.K. Barisal, "Comparative analysis of teaching learning based optimisation of automatic load frequency control of multi-source powers systems", *Renewable and Sustainable Energy Reviews*, vol. 66, pp. 67-77, 2015.

[93] Y. Cui, L. Xu, M. Fei, and Y. Shen, "Observer based robust integral sliding mode load frequency control for wind power systems", *Control Engineering Practice*, vol. 65, pp. 1-10, 2017.

[94] S. Sondhi, and Y.V. Hote, "Fractional order PID controller for perturbed load frequency control using Kharitonov's theorem", *Int. J. Electrical Power and Energy Systems*, vol. 78, pp. 884–896, 2016.

[95] Y. Son, N. Li, X. Zhao, Z. Wei, G. Sun, and C. Huang, "Robust $H_\infty$ load frequency control of delayed multi-area power system with stochastic disturbances", *Neurocomputing*, vol. 193, pp. 58–67, 2016.

[96] D. Qian, S. Tong, H. Liu, and X. Liu, "Load frequency control by neural-network-based integral sliding mode for nonlinear power systems with wind turbines", *Neurocomputing*, vol. 173, pp. 875-885, 2016.

[97] R. Farhangi, M. Boroushaki, S.H. Hosseini, "Load-frequncy control of interconnected power system using emotional learning-based intelligent controller", *Int. J. Electrical Power and Energy Systems*, vol. 36, pp. 76-83, 2012.

[98] C. Mu, Y. Tang, and H. He, "Improved sliding mode design for load frequency control of power system integrated an adptive learning startegy", *IEEE Transactions on Industrial Electronics*, vol. 64, no. 8, pp. 6742-6751, 2017.

[99] K.P.S. Parmar, S. Majhi, and D.P. Kothari, "Load frequency control of a realistic power system with multi-source power generation", *Int. J. Electrical Power and Energy Systems*, vol. 42, pp. 426–433, 2012.

[100] G.T.C. Sekhar, R.K. Sahu, A.K. Baliarsingh, and S. Panda, "Load frequency control of power system under deregulated environment using optimal firefly algorithm", *Int. J. Electrical Power and Energy Systems*, vol. 74, pp. 195–211, 2016.

[101] R. Majumder, A. Ghosh, G. Ledwich, and F. Zare, "Load frequency control for rural distributed generation", *Electric Power Components and Systems,* vol. 38, no. 6, pp. 637–656, April 2010.

[102] M. Khederzadeh, H. Maleki, and V. Asgharian, "Frequency control improvement of two adjacent microgrids in autonomous mode using back to back voltage-sourced converters" *Int. J. of Electrical Power and Energy Systems*, vol. 74, pp. 126–133, 2016.

[103] H. Chen, R. Ye, X. Wang, and R. Lu, "Cooperative control of power system load and frequency by using differential games", *IEEE Transactions on Control Systems Technology*, vol. 23, no. 3, pp. 882-897, 2015.

[104] C.X. Dou, D.L. Liu, X.B. Jia, and F. Zhao, "Management and control for smart microgrid based on hybrid control theory" *Electric Power Components and Systems*, vol. 39, no. 8, pp. 813–832, 2011.

[105] K.S.S. Ramakrishna, and T.S. Bhatti, "Sampled-data automatic load frequency control of a single area power system with multi-source power generation", *Electric. Power Components and Systems*, vol. 35, no. 8, pp. 955-980, 2007.

[106] R. Dey, s. Ghosh, G. Ray, and A. Rakshit, "$H_\infty$ load frequency control of interconnected power systems with communication delays", *Int. J. Electrical Power and Energy Systems*, vol. 42, pp. 672-684, 2012.

[107] C.K. Zhang, L. Jiang, Q.H. Wu, Y. He, and M. Wu, "Further results on delays dependent stability of multi-area load frequency control", *IEEE Transactions on Power Systems*, vol. 28, no. 4, pp. 4465-4474, 2013.

[108] N. Hasan, Ibraheem, and S. Ahmad, "ABT based load frequency control of interconnected power system", *Electric. Power Components and Systems*, vol. 44, no. 8, pp. 853-863, 2016.

[109] S. yang, C. Huang, Y. Yu, D. Yue, and J. Xie, "Load frequency control of interconnected power system via multi-agent system method", *Electric. Power Components and Systems*, vol. 45, no. 8, pp. 839-851, 2017.

[110] A.Y. Abdelaziz, and E.S. Ali, "Load frequency controller design via artificial Cuckoo search algorithm", *Electric. Power Components and Systems*, vol. 44, no. 1, pp. 90-98, 2016.

[111] S.M.A. Elazim, and E.S. Ali, "Load frequency controller design via BAT algorithm for nonlinear interconnected power system", *Int. J. Electrical Power and Energy Systems*, vol. 77, pp. 166-177, 2016.

[112] T.S. Tsay, "Load frequency control of interconnected power system with governor backlash nonlinearities", *Int. J. Electrical Power and Energy Systems*, vol. 33, pp. 1542-1549, 2011.

[113] T. Kennedy, S.M. Hoyt, and C.F. Abell, "Variable nonlinear tie-line frequency bias for interconnected systems control", *IEEE Transactions on Power Systems*, vol. 3, no. 3, pp. 1244-1253, august 1988.

[114] M.L Kothari, J. Nanda, D.P. Kothari, and D. Das, "Discrete mode automatic generation control of two area reheat thermal system with new area control error", *IEEE Transactions on Power Systems*, vol. 4, no. 2, pp. 730-738, May 1989.

[115] Z.M. Al-Hamouz, and Y.L.A. Magid, "Variable structure load frequency controllers for multi-area power systems", *Int. J. Electrical Power and energy Systems*, vol. 15, no. 5, pp. 293-300, 1993.

[116] G. Aly, Y.L.A. Magid, and M.A. Wali, "Load frequency control of interconnected power systems via minimum variance regulators", *Electric Power System Research*, vol. 7, pp. 1-11, 1984.

[117] T.S. Tsay, "Load frequency control of interconnected power system with governor backlash nonlinearities", *Int. J. Electrical Power and energy Systems*, vol. 33, pp. 1542-1549, 2011.

[118] B. Mohanty, S. Panda, and P.K. Hota, "Controller parameters tuning of differential evolution algorithm and its application to load frequency control of multi-source power system", *Int. J. Electrical Power and energy Systems*, vol. 54, pp. 77-85, 2014.

[119] M.R. Khalghani, M.H. Khooban, E.M. Moghaddam, N. Vafamand, M. Goodarzi, "A self-tuning load frequency control strategy for microgrids: human brain emotional learning", *Int. J. Electrical Power and energy Systems*, vol. 75, pp. 311-319, 2016.

[120] O.I. Elgerd, and C.E. Fosha, "Optimum megawatt-frequency control of multi-area electric energy systems" *IEEE Transactions on Power Apparatus and Systems*, vol. PAS-89, no. 4, pp. 556-563, April 1970.

[121] S. Falahati, S.A. Taher, and M. Shahidehpour, "A new smart charging method for EVs for frequency control of smart grid", *Int. J. Electrical Power and energy Systems*, vol. 83, pp. 458-469, 2016.

[122] P. Arboleya, D. Diaz, J.M. Guerrero, P. Garcia, F. Briz, C.G. Moran, and J.G. Aleixandre, "An improved control scheme based in droop characteristics for microgrid converters", *Electric Power Systems Research*, vol. 80, pp. 1215-1221, 2010.

[123] J. Nanda, M.L. Kothari, and P.S. Satsangi, "Automatic generation control of an interconnected hydrothermal system in continuous and discrete modes considering generation rate constraints" *IEE Proc D- Control Theory and Applications*, vol. 130, no. 1, January 1983.

[124] S.C. Tripathy, G.S. Hope, and O.P. Malik, "Optimisation of load frequency control parameters for power systems with reheat steam turbines and governor dead band

nonlinearity", *IEE Proc D- Control Theory and Applications*, vol. 129, no. 1, January 1982.

[125] U.K. Rout, R.K. Sahu, and S. Panda, "Design and analysis of differential evolution algorithm based automatic generation control for interconnected power system" *Ain Shams Engineering Journal*, vol. 4, pp. 409-421, 2013.

[126] T, and A.P. Fathima, "NERC's control performance standards based load frequency controller for a multi-area deregulated power system with ANFIS approach", *Ain Shams Engineering Journal*, vol. 9, pp. 2399-2414, 2018.

[127] R.K. Sahu, T.S. Gorripotu, and S. Panda, "Automatic generation control of multi-area power with divers energy sources using teaching learning based optimisation algorithm", *Int. J. Engineering Science and Technology*, vol. 19, pp. 113-134, 2016.

[128] C.K. Shiva, and V. Mukherjee, "A novel quasi-oppositional harmony search algorithm for AGC optimisation on three-area multi-unit power system after deregulation", *Int. J. Engineering Science and Technology*, vol. 19, pp. 395-420, 2016.

[129] J. Morsali, K. Zare, and M.T. Hagh, "Comparative performance evaluation of fractional orders controllers in LFC of two-area diverse unit power system with considering GDB and GRC effects", *J. of Electrical Systems and Information Technology*, vol. 5, pp. 708-722, 2018.

[130] Y.Q. Bao, Y. Li, B. Wang, M. Hu, and P. Chen, "Demand response for frequency control for multi-area power system", *J. Mod. Power Syst. Clean Energy*, vol. 5, no. 1, pp. 20-29, 2017.

[131] P. Dash, L.C. Saika, and S.K. Das, "AGC of a multi-area hydrothermal system with BES and firefly optimised PID Controller", IEEE Eighteenth National Power Systems Conferences (NPSC), 2014, pp. 1-6.

[132] A. Kumar, O.P. Malik, and G.S. Hope, "Discrete variable structure controller for load frequency control of multi-area interconnected power systems", *IET Proceedings*, vol. 134, no. 2, pp. 116-112, March 1987.

[133] S.C. Tripathy, G.S. Hope, and O.P. Malik, "Optimisation of load frequency control parameters for power systems with reheat steam turbines and governor dead-band nonlinearity", *IET Proceedings*, vol. 129, no. 1, January 1982.

[134] B.K. Sahu, S. Pati, P.K. Mohanty, and S. Panda, "Teaching-learning based optimisation algorithm based fuzzy-PID controller for automatic generation control of multi-area power system", *Applied Soft Computing*, vol. 27, pp. 240-249.

[135] K. Maslo, and M. Kolcun, "Load frequency control management in island operation" *Electric Power Systems Research*, vol. 114, pp. 10-20, 2014.

[136] K. Vrdoljak, N. Peric, and I. Petrovic, "Sliding mode based load frequency control in power systems", *Electric Power Systems Research*, vol. 80, pp. 514-527, 2010.

[137] S.A. Azeer, R.R. Ballgobin, and S.Z.S. Hassen, "Intelligent controllers for load frequency control of two-area power system", *IFAC PapersOnLine*, vol. 50, no. 2, pp. 301-306, 2017.

[138] V.R. Pandi, A. Al-Hinai, and A. Feliachi, "Coordinated control of distributed energy resources to support load frequency control", *Energy Conversion and Management*, vol. 105, pp. 918-928, 2015.

[139] M.H. Khooban, and T. Niknam, "A new intelligent online fuzzy tuning approach for multi-area load frequency control: Self Adaptive Modified Bat Algorithm, *Int. J. Electrical Power and Energy Systems*, vol. 71, pp. 254-261, 2015.

[140] R.K. Sahu, S. Panda, and S. Padhan, "A hybrid firefly algorithm and pattern search technique for automatic generation control of multi-area power systems", *Int. J. Electrical Power and Energy Systems*, vol. 64, pp. 9-23, 2015.

[141] H. Gozde, M.C. Taplamacioglu, and I. Kocaarslan, "Comparative performance analysis of artificial BEE colony algorithm in automatic generation control interconnected reheat thermal power system", *Int. J. Electrical Power and Energy Systems*, vol. 42, pp. 167-178, 2012.

[142] A. Aziz, A. Than-Oo, and A. Stojcevski, "Analysis of frequency sensitive wind plant penetration effect on load frequency control of hybrid power system", *Int. J. Electrical Power and Energy Systems*, vol. 99, pp. 603-617, 2018.

[143] T.C. Yang, Z.T. Ding, and H. Yu, "Decentralised power system load frequency control beyond the limit of diagonal dominance", *Int. J. Electrical Power and energy Systems*, vol. 24, pp. 173-184, 2002.

[144] D. Menniti, A. Pinnarelli, N. Scordino, and N. Sorrentino, "Decentralised adaptive load frequency control in a multi-area power system", *in IFAC Proceedings* on *Large Scale Systems Theory and Applications*, Bucharest, Romania, vol. 34, no. 8, pp. 157-163, 2001.

[145] W. Tan, H. Zhang, and M. Yu, "Decentralised load frequency control in deregulated environments", *Int. J. Electrical Power and energy Systems*, vol. 41, pp. 16-26, 2012.

[146] M.Z. Bernard, T.H. Mohamed, Y.S. Qudaih, and Y. Mitani, "Decentralised load frequency control in an interconnected power system using coefficient diagram method", *Int. J. Electrical Power and energy Systems*, vol. 63, pp. 165-172, 2014.

[147] M.T. Alrifai, M.F. Hassan, M. Zribi, "Decentralised load frequency controller for a multi-area interconnected power system", *Renewable and Sustainable Energy Reviews*, vol. 33,198-229, 2011.

[148] G. Ray, S. Dey, and T.K. Bhattacharyya, "Multi-area load frequency control of power systems: a Decentralised variable structure approach", *Electric Power Components and Systems*, vol. 33, pp. 315-331, 2005.

[149] Y. Mi, Y. Fu, C. Wang, and P. Wang, "Decentralised sliding mode load frequency control for multi-area power systems", *IEEE Transactions on Power Systems*, vol. 28, no. 4, pp. 4301-4309, 2013.

[150] T.H. Mohamed, G. Shabib, and H. Ali, "Distributed load frequency control in an interconnected power system using ecological and coefficient diagram method", *Int. J. Electrical Power and Energy Systems*, vol. 82, pp. 496-507, 2016.

[151] M.R. Sathya, M.M.T. Ansira, "Design of biogeography optimisation based dual gain scheduling of fractional order PI load frequency controllers for multi-source interconnected power systems" *Int. J. Electrical Power and Energy Systems*, vol. 83, pp. 364-381, 2016.

[152] N.J.V. Kumar, and M.M.T. Ansari, "A new design of dual mode Type-II fuzzy logic load frequency controller for interconnected power systems with parallel AC-DC tie-lines and capacitor energy storage unit", *Int. J. of Electrical Power and Energy Systems*, vol. 82, pp. 579-598, 2016.

[153] S. Velusami, and A.I. Chidambaram, "Design of decentralised biased dual mode controllers for load frequency control of interconnected power systems", *Electric Power Components and Systems*, vol. 34, pp. 1057-1075, 2006.

[154] M.R. Sathya, and M.M.T. Ansari, "Load frequency control using BAT inspired algorithm based dual mode gain scheduling of PI controllers for interconnected power system, "*Int. J. of Electrical Power and Energy Systems*, vol. 64, pp.365-374, 2015.

[156] S. Velusami, and A.I. Chidambaram, "Decentralised biased dual mode controllers for load frequency control of interconnected power systems considering GDB and GRC non-linearities, *Energy Conversion and Management*, vol. 48, pp.1691-1702, 2007.

[157] M.R. Sathya, M.M.T. Ansari, "Load frequency control using bat inspired algorithm based dual mode gain scheduling of PI controllers for interconnected power system", *Int. J. Electrical Power and Energy Systems*, vol. 64, pp. 365-374, 2015

[158] V. Chandrakala, B. Sukumar, and K. Sankaranarayan, "Load frequency control of multi-source multi-area hydro thermal system using flexible alternating current transmission system devices", *Electric. Power Components and Systems*, vol. 42, no. 9, pp. 927-934, 2014.

[159] R. Shankar, K. Chatterjee, and R. Bhushan, "Impact of energy storage system on load frequency control for diverse sources of interconnected power system in deregulated power environment", *Int. J. Electrical Power and Energy Systems*, vol. 79, pp. 11-26, 2016.

[160] D. Guha, P.K. Roy, and S. Banerjee, "Load frequency control of interconnected power system using grey wolf optimization," *Swarm and Evolutionary Computation*, vol. 27, pp. 97-115, 2016.

[161] A. Pappachen, and A.P. Fathima, "Load frequency control in deregulated power system integrated with SMES-TCPS combination using ANFIS controller", *Int. J. Electrical Power and Energy Systems*, vol. 82, pp. 519-534, 2016.

[162] M. Nandi, C.K. Shiva, and V. Mukherjee, "Frequency stabilisation of multi-area multi-source interconnected power system using TCSC and SMES mechanism" *Journal of Energy Storage*, vol. 14, pp. 248-362, 2017.

[163] S.C. Tripathy, R. Balasubramanien, and P.S.C. Nair, "Adaptive automatic generation control with superconducting magnetic energy storage in power systems", *IEEE Transactions on Energy Conversion*, vol. 7, no. 3, pp.434-441, September 1992.

[164] C.F. Lu, C.C. Liu, and C.J. Wu, "Effect of battery energy storage system on load frequency control considering governor Dead-band and generation rate constraint", *IEEE Transactions on Energy Conversion*, vol. 10, no. 3, pp. 555-561, September 1995.

[165] W.G. Gonzalez, O.D. Montoya, and A. Garces, "Control of a SMES for mitigating sub-synchronous oscillations in power systems: a PBC-PI approach", *Journal of Energy Storage*, vol. 20, pp. 163-172, 2018.

[166] Y. Luo, L. Shi, and G. Tu, "Optimal sizing and control strategy of isolated grid with wind power and energy storage system", *Energy Conversion and Management*, vol. 80, pp. 407-415, 2014.

[167] W. Jing, C.H. Lai, W.S.H. Wong, and M.L.D. Wong, "A comprehensive study of battery super-capacitor hybrid energy storage system for standalone PV power system in rural electrification", *Applied Energy*, vol. 224, pp. 340-256, 2018.

[168] S. Dhundhara, and Y.P. Verma, "Capacitive energy storage with optimised controller for frequency regulation in realistic multisource deregulated power system, *Energy*, vol. 147, pp. 1108-1128, 2018.

[169] R. Wang, X. Zhang, and J. Bao, "A self-interested distributed economic model predictive control approach to battery energy storage networks", *Journal of Process Control*, vol. 73, pp. 9-18, 2019.

[170] K. Fujimoto, T. Ota, Y. Shimizu, T. Ichikawa, K. Yukita, Y. Goto, K.Ichiyanagi, t. Takeda, K. Hirose, and Y. Okui, "Load frequency control using storage system for microgrid", Conference IEEE T&D, Asia 2009, pp. 1-4.

[171] J. Després, S. Mima, A. Kitous, P. Criqui, N. Hadjsaid, and I. Noirot, "Storage as a flexibility option in power systems with high shares of variable renewable energy sources: a Poles-based analysis", *Energy Economics*, vol. 64, pp. 638-650, 2017.

[172] A. Demiroren, and E. Yesil, "Automatic generation control with fuzzy logic controllers in the power system including SMES units", *Electrical Power and Energy Systems*, vol. 26, pp. 291-305.

[173] R. Shankar, R. Bhushan, and K. Chatterjee, "Small-signal stability analysis for two area interconnected power system with load frequency controller in coordination with FACTS and energy storage devise", *Ain Shans Engineering Journal*, vol. 7, pp. 603-612, 2016.

[174] S. Chapaloglou, A. Nesladis, P. Iliadis, K. Atsonlos, N. Nikolopoulos, P. Grammelis, C. Ylakopouls, I. Antoniadis, and E. Kakaras, "Smart energy management algorithm for load smoothing and peak shaving based on load forecasting of an island's power system", *Applied Energy*, vol. 238, pp. 627-643, 2019.

[175] R.K. Selvaraju, and G. Somaskandan, "Impact of energy storage units on load frequency control of deregulated power systems", *Energy*, vol. 97, pp.214-228, 2016.

[176] I.A. Chidambaram, and B. Paramasivm, "Control performance standards based load frequency controller considering redox flow batteries coordinate with interline power flow controller", *Journal of Power Sources*, vol.219, pp.292-304, 2012.

[177] P. Bhatt, R. Roy, and S.P. Ghoshal, "Comparative performance evaluation of SMES-SMES, TCPS-SMES and SSSC-SMES controllers in automatic generation control for two area hydro-hydro system", *Int. J. Electrical Power and energy Systems*, vol. 33, pp. 1585-1597, 2011.

[178] A. Muzhikyan, A.M. Farid, and K.Y. Toumi, "Relative merits of load following reserves and energy storage market integration towards power system imbalances", *Int. J. Electrical Power and energy Systems*, vol. 74, pp. 222-229, 2016.

[179] H. Moradi, M. Esfahanian, A. Abtachi, and A. Zilouchiean. "Optimisation and energy management of a standalone hybrid microgrid in the presence of battery storage system", *Energy*, vol. 147, pp. 226-238, 2018.

[180] P. Colbertaldo, S.B. Agustin, and S. Campanari, “Impact of hydrogen energy storage on California electric power system: Towards 100% renewable electricity”, *Int. J. of Hydrogen Energy*, (In Press).

[181] S.K. Aditya, and D. Das, “Battery energy storage or load frequency control of an interconnected power system”, *Electric Power Systems Research*, vol. 58, pp. 179-185, 2001.

[182] M. Nandi, C.K. Shiva, and V. Mukherjee, “Frequency stabilisation of multi-area multi-source interconnected power system using TCSC and SMES mechanism”, *Journal of energy storage*, vol. 14, pp. 348-362, 2017.

[183] S.M. Muyeen, H.M. Hasanien, and A. Al-Durra, “Transient stability enhancement of wind farms connected to a multi-machine power system by using an adaptive ANN-controlled SMES”, *Energy Conversion and Management*, vol. 78, pp. 412-420, 2014.

[184] T. Kerdphol, Y. Qudaih, and Y. mitani, “Optimum battery energy storage system using PSO considering dynamic demand response for microgrids” *Int. J. Electrical Power and energy Systems*, vol. 83, pp. 58-66, 2016.

[185] D.M. Greenwood, K.Y. Lim, C. Patsios, P.F. Lyons, Y.S., and P.C. Taylor, “Frequency response services designed for energy storage”, *Applied Energy*, vol. 203, pp. 115-127, 2017.

[186] Y. Arya, “AGC of PV- thermal and hydro thermal power systems using CES and a new multi stage FPIDF (1+PI) controller”, *Renewable Energy*, vol. 134, pp. 796-806, 2019.

[187] Y. Zheng, B.M. Jemkins, K. Kornbluth, and C. Traeholt, “Optimisation under uncertainty of a biomass integrated renewable energy microgrid with energy storage”, *Renewable Energy*, vol. 123, pp. 204-217, 2018.

[188] H. Branco, R. Castro, and A.S. Lopes, “Battery energy storage systems as a way to integrate renewable energy in small isolated power systems”, *Energy for Sustainable Development*, vol. 43, pp. 90-99, 2018.

[189] M.U.D. Mufti, S.A. Lone, S.J. Iqbal, M. Ahmad, and M. Ismail, “Super-capacitor based energy storage system for improved load frequency control”, *Electric Power and Systems Research*, vol. 79, pp. 226-233, 2009.

[190] R. Shankar, R. Bhushan, and K. Chatterjee, “Small signal stability analysis for two area interconnected power system with load frequency controller in coordination with FACTS and energy storage devise”, *Ain Shams Engineering Journal*, vol. 7, pp. 603-612, 2016.

[191] M. Ramirez, R. Castellanos, G. Calderon, and O. Malik, « Placement and sizing of battery energy storage for primary frequency control in an isolated section of the Mexican power system”, *Electric Power and Systems Research*, vol. 160, pp. 142-150, 2018.

[192] R.K. Sahu, T.S. Gorripotu, and S. Panda, “A hybrid DE-PS algorithm for load frequency control under deregulated power system with UPFC and RFB”, *Ain Shams Engineering Journal*, vol. 6, pp. 893-911, 2015.

[194] J. Hu, Y. Xu, K.W. Cheng, and J.M. Guerrero, “A model predictive control strategy of PV-Battery microgrid under variable power generations and load conditions”, *Applied Energy*, vol. 221, pp. 195-203, 2018.

[195] G. Cardoso, T. Brouhard, N. DeForest, D. Wang, M. Helono, and L. Kotzur, "Battery aging in multi energy microgrid design using mixed integer linear programming", *Applied Energy*, vol. 231, pp. 1059-1069, 2018.

[196] R. Khezri, A. Oshnoei, S. Oshnoei, H. Bevrani, and S.M. Muyeen, "An intelligent coordinator design for GCSC and AGC in two area hybrid power system", *Applied Soft Computing Journal*, vol. 76, pp. 491-504, 2019.

[197] S. Padhan, R.K. Sahu, and S. Panda, "Automatic generation control with Thyristors controlled series compensator including superconducting magnetic energy storage units, *Ain Shams Engineering Journal*, vol. 5, pp. 759-774, 2014.

[198] T.S. Gorripotu, R.K. Sahu, and S. Panda, "AGC of a multi-area power system under deregulated environment using redox flow batteries and interline power flow controller", *Engineering Science and Technology, an International Journal*, vol. 18, pp. 555-578, 2015.

[199] R. Thirunavukarasu, and I.A. Chidambaram, "$PI^2$ controlled based coordinated control with redox flow battery and unified power flow controller for improved restoration indices in a deregulated power system" *Ain Shams Engineering Journal*, vol. 7, pp. 1011-1027, 2016.

[200] M. Elsisi, M. Soliman, M.A.S. Aboelee, and W. Mansour, "Optimal design of model predictive control with superconducting magnetic energy storage for load frequency control of nonlinear hydrothermal power system using bat inspired algorithm", Journal of Energy Storage", vol. 12, pp.311-318, 2017.

[201] P.C. Pradhan, R.K. Sahu, and S. Panda, "Firefly algorithm optimised fuzzy PID controller for AGC of multi-area multi source power systems with UPFC and SMES", *Engineering Science and Technology, an International Journal*, vol. 19, pp. 338-354, 2016.

[202] Z. Huang, Y. Ni, C.M. Shen, F.F. Wu, S. Chen, and B. Zhang, "Application of unified power flow controller in interconnected power systems-Modelling, interface, control strategy, and case study", *IEEE Transactions on Power Systems*, vol. 15, no. 2, pp. 817-824, May 2000.

[203] M.R. Toulabi, M. Shiroei, and A.M. Ranjbar, "Robust analysis and design of power system load frequency control using the Kharitonov's theorem", *Int. J. Electrical Power and Energy Systems*, vol. 55, pp. 51-58, 2014.

[204] A. Huddar, and P.S. Kulkarni, "A robust method of tuning the feedback gains of a variable structure load frequency controller using genetic algorithm optimisation", *Electric. Power Components and Systems*, vol. 36, pp. 1351-1368, 2008.

[205] A. Khodabakhshian, and M. Edrisi, "A new robust PID load frequency controller", *Control Engineering Practice*, vol. 16, pp. 1069-1080, 2008.

[206] M.H. Khooban, T. Niknam, F. Blaabjerg, P. Davari, and T. Dragičević, "A robust adaptive load frequency control for microgrids", *ISA Transactions*, vol. 65, pp. 20-229, 2016.

[207] Q. Zhu, L. Jiang, W. Yao, C.K. Zhang, and C. Luo, "Robust load frequency control with dynamic demand response for deregulated power systems considering communication delays", *Electric. Power Components and Systems*, vol. 45, no. 1, pp. 75-87, 2017.

[208] R. Krishnan, J.K. Pragatheeswaran, and G. Ray, "Robust stability of networked load frequency control systems with time-varying delays", *Electric. Power Components and Systems*, vol. 45, no. 3, pp. 302-314, 2017.

[209] W. Tan, and Z. Xu, "Robust analysis and design of load frequency controller for power systems", *Electric Power Systems Research*, vol. 79, pp. 846-853, 2009.

[210] W. Tan, and H. Zhou, "Robust analysis of decentralised load frequency control for multi-area power systems", *Int. J. Electrical Power and energy Systems*, vol. 43, pp. 996-1005, 2012.

[211] K.R. Sudha, R.V. Santhi, "Robust decentralised load frequency control of interconnected power system with generation rate constraint using Type-2 fuzzy approach", *Int. J. Electrical Power and energy Systems*, vol. 33, pp. 699-707, 2011.

[212] V.P. Singh, S.R. Mohanty, N. Kishor, and P.K. Ray, "Robust H-infinity load frequency control in hybrid distributed generation system", *Int. J. Electrical Power and energy Systems*, vol. 46, pp. 294-305, 2013.

[213] H. Bevrani, Y. Mitani, and K. Tsuji, "Robust decentralised load frequency control using an iterative linear matrix inequalities algorithm", *IEEE Proc Gener Transm Distrib*, vol. 151, no. 3, pp. 347-354, May 2004.

[214] H. Shabani, B. Vahidi, and M. Ebrahimpour, "A robust PID controller based on imperialist competition algorithm for load frequency control of power systems", ISA Transactions, vol. 52, pp. 88-95, 2013.

[215] K.R. Sudha, Y.B. Raju, and A.C. Sekhar, "Fuzzy C-Means clustering for robust decentralised load frequency control of interconnected power system with generation rate constraint", *Int. J. Electrical Power and energy Systems*, vol. 37, pp. 58-66, 2016.

[216] Y. Sun, N. Li, X. Zhao, Z. Wei, G. Sun, and C. Huang, "Robust $H_\infty$ load frequency control of delayed multi-area power with stochastic disturbances", *Neurocomputing*, vol. 193, pp. 58-67, 2016.

[217] H.J.Lee, J.B. Park, and Y.H. Joo, "Robust load frequency control for uncertain nonlinear power systems a fuzzy logic approach", *Information Sciences*, vol. 176, pp. 3520-3537, 2006.

[218] A. Ahmadi, and M. Aldeen, "Robust overlapping load frequency output feedback control of multi-area interconnected power systems", *Int. J. Electrical Power and energy Systems*, vol. 89, pp. 156-172, 2017.

[219] C.S.A. Nandar, "Robust PI control of smart controllable load for frequency stabilisation of microgrid power system", *Renewable Energy*, vol. 56, pp. 16-23, 2016.

[220] K. Liao, and Y. Xu, "A robust load frequency control scheme for power systems based on second-order sliding mode and extended disturbances observer", *IEEE Transactions on Industrial Informatics*, vol. 14, no. 7, pp. 3076-3086, 2017.

[221] A. Yazdizadeh, M.H. Ramezani, and E. Hamedrahmat, "Decentralised load frequency control using a new robust optimal MISO PID controller", *Int. J. Electrical Power and energy Systems*, vol. 35, pp. 57-65, 2012.

[222] I.A. Chidambaram, and S. Velusami, "Design of decentralised biased controllers for load frequency control of interconnected power systems", *Electric. Power Components and Systems*, vol. 33, pp. 1313-1331, 2005.

[223] A.P. Fathima, and M.A. Khan, "Design of a new market structure and robust controller for the frequency regulation service in the deregulated power system", *Electric. Power Components and Systems*, vol. 36, pp. 864-883, 2008.

[224] S. Patra, S. Sen, and G. Ray, "Design of robust load frequency controller $H_\infty$ loop shaping approach", *Electric. Power Components and Systems*, vol. 35, pp. 769-783, 2007.

[225] A. Zamani, S.M. Barakati, S.Y. Darmian, "Design of a fractional order controller using GBMO algorithm for load frequency control with governor saturation consideration", ISA Transactions, vol. 64, pp. 56-66, 2016.

[226] A. Khodabakshian, M.E. Pour, and R. Hooshmand, "Design of a robust load frequency control using sequential quadratic programming technique", *Int. J. Electrical Power and Energy Systems*, vol. 40, pp. 1-8, 2012.

[227] R. Khezri, S. Golshannavaz, S. Shokoohi, and H. Bevrani, "Fuzzy logic based fine-tuning approach for robust load frequency control in a multi-area power system", *Electric. Power Components and Systems*, vol. 44, no. 18, pp. 2073-2083, 2016.

[228] M. Xiangping, M. Xiangyin, L. Dayou, T. Wanyu, "Fuzzy sliding mode load frequency control of multi-area interconnected power systems", *in IFAC Conference on New Technologies for Computer Control*, 19-252 November 2001, Hong Kong, pp. 452-457.

[229] A. Delassi, S. Arif, and L. Mokrani, "Load frequency control problem in interconnected power systems using robust fractional PID controller", *Ain Shams Engineering Journal*, vol. 9, pp. 77-88, 2018.

[230] I. Ngamroo, and W. Kongprawechnon, "A robust controller design of SSSC for stabilisation of frequency oscillations in interconnected power systems", Electric Power System Research, vol. 67, pp. 161-176, 2003.

[231] L. Xiong, H. Li, and J. Wang, "LMI based robust load frequency control for time delayed power system via delay margin estimation, *Int. J. of Electrical Power and Energy Systems*, vol. 100, pp. 91-103, 2018.

[232] H. Bevrani, and T. Hiyama, "Robust load frequency regulation: a real time laboratory experiment", *Optim. Control Appl. Meth.*, vol. 28, pp. 419-433, 2007.

[233] M.H. Kazemi, M. Karrari, and M.B. Menhaj, "Decentralised robust adaptive-output feedback controller for power system load frequency control", *Electrical Engineering*, vol. 84, pp. 75-83, 2002.

[234] R.K. Sahu, S. Panda, U.K. Rout, "DE optimized parallel 2-DOF PID controller for load frequency control of power system with governor dead-band nonlinearity", *Int. J. Electrical Power and Energy Systems*, vol. 49, pp. 19-33, 2013.

[235] A. Abdennour, "Adaptive optimal gain scheduling for the load frequency control problem", *Electric. Power Components and Systems*, vol. 30, no. 1, pp. 45-56, 2002.

[236] M. Zribi, M.A. Rashed, and M. Alrifai, "Adaptive decentralised load frequency control of multi-area power systems", *Int. J. Electrical Power and Energy Systems*, vol. 27, pp. 575-583, 2005.

[241] L. Wang, "Model predictive control system design and implementation using Matlab", London, Springer, 2009.

[242] M. Elsisi, M. Soliman, M.A.S. Aboelela, and W. Mansour, "Bat inspired algorithm based optimal design of model predictive load frequency control", *Int. J. Electrical Power and Energy Systems*, vol. 83, pp. 426-433, 2016.

[243] Y. Zheng, J. Xu, Y. Zhang, and Z. Qian, "A distributed model predictive control based load frequency control scheme for interconnected power system using discrete-time Laguerre functions", *ISA Transactions*, vol. 68, pp. 127-140, 2017.

[244] A.M. Ersdal, L. Imsland, K. Uhlen, D. Fabozi, and N.F. Thornhill, "Model predictive load frequency control taking into account imbalance uncertainty", *Control Engineering Practice*, vol. 53, pp. 139-150, 2016.

[245] A.M. Ersdal, L. Imsland, and K. Uhlen, "Model predictive load frequency control", *IEEE Trans. Power Systems,* vol. 31, no. 1, pp. 777-785, 2016.

[246] A.M. Kassem, "Neural predictive controller of a two area load frequency control for interconnected power system", *Ain Shams Engineering Journal*, vol. 1, pp. 49-58, 2010.

[247] M. Khalid, and A.V. Savkin, "An optimal operation of wind energy storage system for frequency control based on model predictive control", *Renewable Energy*, vol. 48, pp. 127-132, 2012.

[248] L.E. Sokoler, K. Edlund and J.B. Jorgensen, "Application of economic MPC to frequency control in single area power system", *in Proc. IEEE 54th Conference on Decision and Control (CDC 2015)*,15-18 December, 2015, Osaka, Japan, pp. 2635-2642.

[249] D.H. Tungadio, R.C. Bansal, M.W. Siti, and N.T. Mbungu, "Predictive active power control of two interconnected microgrids", *Technol Econ Smart Grids Sustain Energy*, vol. 3, no. 3, pp. 1-15, 2018.

[250] A. Morattab, Q. Shafiee, and H. Bevrani, "Decentralized model predictive load frequency control for deregulated power systems in tough situation", *in Proc. IEEE PowerTech, 19-23 June, 2011*, Trondheim, Norway, pp. 1-5.

[251] H. Zhao, Q. wu, Q. Guo, H. Sun, and Y. Xue, "Optimal active power control of a wind farm equipped with energy storage system based on distributed model predictive control", IET Gener. Transm. Distrib. vol. 10, no. 3, pp. 669-677, 2016.

[252] T. Hilliard, L. Swan, M. Kavgic, Z. Qin, and P. Lingras, "Development of whole building model predictive control strategy for a Leed silver community college", *Energy and Buildings*, vol. 111, pp. 224-232, 2016.

[253] T.H. Mohamed, J. Morel, H. Bevrani and T. Hiyama, "Model predictive based load frequency control based concerning wind turbines" *Int. J. Electrical Power and Energy Systems*, vol. 43, pp. 859-867, 2012.

[254] Y. Zhang, X. Liu, and Y. Yan, "Model predictive control for load frequency control with wind turbines" *Journal of Control Science Engineering*, vol. 8, pp. 1-17, 2015.

[255] Y. Zheng, J. Zhou, W. Zhu, C. Zhang, C. Li, and W. Fu, "Design of a multi-mode intelligent model predictive control strategy for hydroelectric generating unit," Neurocomputing, vol. 207, pp. 287-299, 2016.

[256] M. Shiroei, A.M. Ranjibar, and T. Amraee, "A functional model predictive control approach for power system load frequency control considering generation rate constraint", *Int. Trans. Electr. Energ. Syst.*, vol. 23, pp. 214-229, 2013.

[257] T.H. Mohamed, J. Morel, H. Bevrani, and T. Hiyama, "Model predictive based load frequency control design concerning wing turbines", *Int. J. Electrical Power and Energy Systems*, vol. 43, pp. 859-867, 2012.

[258] G. Magdy, G. Shabib, A.A. Elbaset, and Y. Mitani, "Frequency stabilisation of renewable

power systems based on MPC with application to the Egyptian Grid", *IFAC PaperOnLine*, vol. 51, no. 28, pp. 280-285, 2018.
[259] X. Liu, X. Kong, and K.Y. Lee, "Distributed model predictive control for load frequency control with dynamic fuzzy valve position modelling for hydro-thermal power system", *IET Control Theory Appl*, vol. 10, no. 14, pp. 1653-1664, 2016.
[260] M. Ma, C. Zhang, X. Liu, and H. Cheng, "Distributed model predictive load frequency control of the multi-area power system after deregulation", *IEEE Transactions on Industrial Electronics*, vol. 64, no. 6, pp. 5129-5139, 2017.
[261] Y. Zhang, X. Liu, and B, Qu, "Distributed model predictive load frequency control of multi-area power system with DFIGs", *IEEE/CAA Journal of Automatica Sinica*, vol. 4, no. 1, pp. 125-135, 2017.
[262] X. Liu, Y. Zhang, and K.Y. Lee, "Coordinated distributed MPC for load frequency control of power system with wind farms", *IEEE Transactions on Industrial Electronics*, vol. 64, no. 6, pp. 5140-5150, 2017.
[263] M. Ma, H. Chen, X. Liu, and F. Allgowen, "Distributed model predictive load frequency control of multi-area interconnected power system", *Int. J. Electrical Power and Energy Systems*, vol. 62, pp. 289-298, 2014.
[264] X. Liu, X. Kong, and X. Deng, "Power system model predictive load frequency control", *in Proc. American Control Conference*, Fairmont Queen Elisabeth, Montréal, Canada, 27-29 June 2012, pp. 6602-6607.
[265] M. Shiroei, M.R. Toulabi, and A.M. Ranjbar, "Robust multivariable predictive based load frequency control considering generation rate constraint" *Int. J. Electrical Power and Energy Systems*, vol. 46, pp. 406-413, 2013.
[266] M. Ma, H. Chen, X. Liu, and F. Allgower, "Distributed model predictive load frequency control of multi-area interconnected power system", *Int. J. Electrical Power and Energy Systems*, vol. 62, pp. 289-298, 2014.
[267] T.H. Mohamed, H. Bevrani, A.A. Hassan, and T. Hiyama, "Decentralized model predictive based load frequency control in an interconnected power system", *Energy Conversion and Management*, vol. 52, pp. 1208-1214, 2011.
[268] A.M. Ersdal, D. Fabozzi, L. Imsland, and N.F. Thornhill, "Model predictive control for power system frequency control taking into account imbalance uncertainty", *in Proc. of 19th World Congress of International Federation of Automatic Control*, Cape Town, South Africa, 24-29 August 2014, pp. 981-986.
[269] P. Ojaghi, and M. Rahmani, "LMI-Based robust predictive load frequency control for power systems with communication delays", *IEEE Transactions on Power Systems*, vol. 32, no. 5, pp. 4091-4100, 2017.
[270] A.N. Venkat, I.A. Hiskens, J.B. Rawlings, and S.J. Wright, "Distributed MPC strategies with application to power system automatic generation control", *IEEE Trans. Control Systems Technology*, vol. 16, no. 6, pp. 1192-1206, 2008.
[271] M. Shiroei, and A.M. Ranjbar, "Supervisory predictive control of power system load frequency control", *Int. J. Electrical Power and Energy Systems*, vol. 61, pp. 70-80, 2014.
[272] X. Liu, Y. Zhang, and K.Y. Lee, "Robust distributed MPC for load frequency control of certain power systems", *Control Engineering Practice*, vol. 56, pp. 136-147, 2016.