Data Detection and Channel Estimation of OFDM Systems Using Differential Modulation

A Thesis Submitted to the College of

Graduate Studies and Research

In Partial Fulfillment of the Requirements

For the Degree of Master of Science

In the Department of Electrical Engineering

University of Saskatchewan

Saskatoon

By

Zobayer Abdullah Khizir

PERMISSION TO USE

In presenting this thesis in partial fulfilment of the requirements for a Postgraduate degree of Master of Science from the University of Saskatchewan, the author agrees that the libraries of this University may make it freely available for inspection. The author further agrees that permission for copying of this thesis in any manner, in whole or in part, for scholarly purposes may be granted by the professor or professors who supervised this thesis work or, in their absence, by the Head of the Department or the Dean of the College of Graduate Studies and Research in which this thesis work was done. It is understood that any copying or publication or use of this thesis or parts thereof for financial gain shall not be allowed without the author's written permission. It is also understood that due recognition shall be given to the author and to the University of Saskatchewan in any scholarly use which may be made of any material in this thesis.

Requests for permission to copy or to make other use of material in this thesis in whole or part should be addressed to:

Head of the Department of Electrical Engineering,
57 Campus Drive,
University of Saskatchewan,
Saskatoon, Saskatchewan,
Canada S7N 5A9

ABSTRACT

Orthogonal Frequency Division Multiplexing (OFDM) is a multicarrier modulation technique which is robust against multipath fading and very easy to implement in transmitters and receivers using the inverse fast Fourier transform and the fast Fourier transform. A guard interval using cyclic prefix is inserted in each OFDM symbol to avoid the inter-symbol interference. This guard interval should be at least equal to, or longer than the maximum delay spread of the channel to combat against inter-symbol interference properly.

In coherent detection, channel estimation is required for the data detection of OFDM systems to equalize the channel effects. One of the popular techniques is to insert pilot tones (reference signals) in OFDM symbols. In conventional method, pilot tones are inserted into every OFDM symbols. Channel capacity is wasted due to the transmission of a large number of pilot tones. To overcome this transmission loss, incoherent data detection is introduced in OFDM systems, where it is not needed to estimate the channel at first. We use differential modulation based incoherent detection in this thesis for the data detection of OFDM systems. Data can be encoded in the relative phase of consecutive OFDM symbols (inter-frame modulation) or in the relative phase of an OFDM symbol in adjacent subcarriers (in-frame modulation). We use higher order differential modulation for in-frame modulation to compare the improvement of bit error rate. It should be noted that the single differential modulation scheme uses only one pilot tone, whereas the double differential uses two pilot tones and so on. Thus overhead due

to the extra pilot tones in conventional methods are minimized and the detection delay is reduced. It has been observed that the single differential scheme works better in low SNRs (Signal to Noise Ratios) with low channel taps and the double differential works better at higher SNRs. Simulation results show that higher order differential modulation schemes don't have any further advantages. For inter-frame modulation, we use single differential modulation where only one OFDM symbol is used as a reference symbol. Except the reference symbol, no other overhead is required. We also perform channel estimation using differential modulation. Channel estimation using differential modulation is very easy and channel coefficients can be estimated very accurately without increasing any computational complexity. Our simulation results show that the mean square channel estimation error is about 10^{-2} at an SNR of 30 dB for double differential in-frame modulation scheme, whereas channel estimation error is about 10^{-4} for single differential inter-frame modulation. Incoherent data detection using classical DPSK (Differential Phase Shift Keying) causes an SNR loss of approximately 3 dB compared to coherent detection. But in our method, differential detection can estimate the channel coefficients very accurately and our estimated channel can be used in simple coherent detection to improve the system performance and minimize the SNR loss that happens in conventional method.

ACKNOWLEDGEMENTS

I express my gratitude to my supervisor Dr. Aryan Saadat Mehr and thank him for his support, idea, guidance and patience throughout my MSc. Program.

I would like to give thanks to the Department of Electrical Engineering and the College of Graduate Studies and Research, University of Saskatchewan, for providing support during this research. Special thanks to Natural Sciences and Engineering Research Council (NSERC) for financial support.

At last, I would like to give thanks to my friends Khizir Mahmud and Dr. Shaikh Hasibul Majid, for their personal encouragement and support.

TABLE OF CONTENTS

Pages

LIST OF TABLES

LIST OF FIGURES

LIST OF ABBREVIALTIONS

ADSL	Asymmetric Digital Subscriber Line
AWGN	Additive White Gaussian Noise
BER	Bit Error Rate
BRAN	Broadband Radio Access Networks
CP	Cyclic Prefix
CDMA	Code Division Multiple Access
COFDM	Coded Orthogonal Frequency Division Multiplexing
DAB	Digital Audio Broadcasting
DDM	Double Differential Modulation
DFT	Discrete Fourier Transform
DM	Differential Modulation
DPSK	Differential Phase Shift Keying
DVB	Digital Video Broadcasting
EDGE	Enhanced Data rates of Global system for mobile communication Evolution
FDMA	Frequency Division Multiple Access
FFT	Fast Fourier Transform
GI	Guard Interval
GPRS	General Packet Radio Systems
HDSL	High bit-rate Digital Subscriber Line
HDTV	High Definition Television
HIPERLAN	High Performance Local Area Networks
ICI	Inter-carrier Interference
IDFT	Inverse Discrete Fourier Transform

IFFT	Inverse Fast Fourier Transform
ISI	Inter-symbol Interference
LOS	Line of Sight
MAN	Metropolitan Area Network
OFDM	Orthogonal Frequency Division Multiplexing
OFDMA	Orthogonal Frequency Division Multiple Access
PHY	Physical Layer
QAM	Quadrature Amplitude Modulation
QPSK	Quadrature Phase Shift Keying
SDM	Single Differential Modulation
SNR	Signal to Noise Ratio
TDMA	Time Division Multiple Access
VHDSL	Very High speed Digital Subscriber Line
WBMCS	Wireless Broadband Multimedia Communication Systems
WBPAN	Wireless Broadband Personal Area Networks
WGAN	Wireless Global Area Networks
WLAN	Wireless Local Area Networks
WPAN	Wireless Personal Area Networks
WWAN	Wireless Wide Area Networks

CHAPTER 1
INTRODUCTION

In this chapter, the evolution of OFDM systems and its applications are introduced at first. After discussing the basic concept behind the multicarrier OFDM systems, our objectives and organization of this thesis are discussed.

1.1 History of OFDM Systems

Over the last decade wireless industries have had a rapid growth so that they can meet the demand of high transmission rates for voice, data, graphical images and videos. More attention has been given to improve the services for mobile wireless telecommunication users rather than wired networks for the last couple of years. At present, low bit-rate data services are available for mobile users with voice. However, the demand for wireless broadband multimedia communication systems (WBMCS) is increasing both in public and private sectors. Generally, the mobile radio channel is characterized by multipath reception. The received signal contains not only a direct line of sight (LOS) radio wave but also a large number of reflected radio waves that arrive at the receiver at different times. These reflected waves are the delayed versions of the original signal which reflects from trees, hills, mountains, vehicles or buildings. These delayed waves interfere with the direct wave (LOS) and introduce inter-symbol interference (ISI), which causes significant degradation of network performance. Any wireless network should be designed so that it can minimize this adverse effect.

For broadband multimedia mobile communication systems, high bit-rate transmission of up to several megabits per second (Mbps) is required. High rate digital data transmission with several Mbps will increase the delay time for the delayed waves, which may become greater than the duration of a data symbol. At the receiving end, there is a need to separate the present data symbol from the delayed waves of the previous symbols. One of the solutions for this problem is to use adaptive equalizer at the receiving end. However, there are some limitations due to the complexity of algorithms when operating these equalizers in high speed data transmission systems. For example, the Maximum likelihood (ML) detection of the transmitted symbols can be implemented using the Viterbi algorithm. But the complexity of the ML algorithm grows exponentially with the number of channel taps [28]. One practical problem is to build these equalizers in compact form with low cost hardware [5]. For the mitigation of multipath fading effects with low complexity and to achieve wireless broadband multimedia communications, the orthogonal frequency division multiplexing (OFDM) transmission scheme has been proposed by the Institute of Electrical and Electronics Engineers (IEEE). OFDM is a multicarrier communication scheme for parallel data transmission. OFDM can reduce the complexity of the equalization scheme. In a typical OFDM system, the broadband is partitioned into many orthogonal subcarriers for parallel data transmission. The data rate for each subcarrier is lowered by a factor of N for a system of N subcarriers. This narrowband flat fading channel makes OFDM systems more robust against multipath fading effects. All the subcarriers overlap with each other but remain orthogonal for one complete period. Cyclic prefix is used as a guard interval in OFDM symbols to avoid ISI. Typically, the last portion of an OFDM symbol is repeated in front

of that symbol to create the guard interval. This guard interval should be at least equal to or longer than the maximum delay spread of the channel to avoid ISI. This cyclic prefix is easy to use but it will reduce the transmission efficiency in an OFDM symbol. For a system of N subcarriers, if N_g data are repeated as a cyclic prefix, reduced transmission efficiency will become $\frac{N}{N+N_g}$.

The concept of OFDM using parallel data transmission is not new. It was first introduced in mid-1960's, based on multicarrier modulation techniques. OFDM systems remained unpopular until early of 1970's due to the requirements of large array signal generator as well as coherent demodulators at the receiving end. In 1971, Weinstein and Ebert brought the discrete Fourier transform (DFT) and inverse DFT (IDFT) into OFDM systems as part of modulation and demodulation purposes, which made multicarrier modulation applications very popular [29]. Later, the use of the fast Fourier transform (FFT) and inverse FFT (IFFT) made the advancement of OFDM systems easier. Using this method, both transmitter and receiver are implemented with efficient FFT techniques that reduce the number of operations from N^2 in DFT to the order of $N \log N$ [2].

Current wireless technologies such as wireless global area networks (WGANs), wireless wide area networks (WWANs), wireless local area networks (WLANs), wireless personal area networks (WPANs) and wireless broadband personal area networks (WB-PANs) have made a tremendous impact on wireless industries. OFDM based modulation is used in the physical layer (PHY) for data transmission for almost all of these technologies.

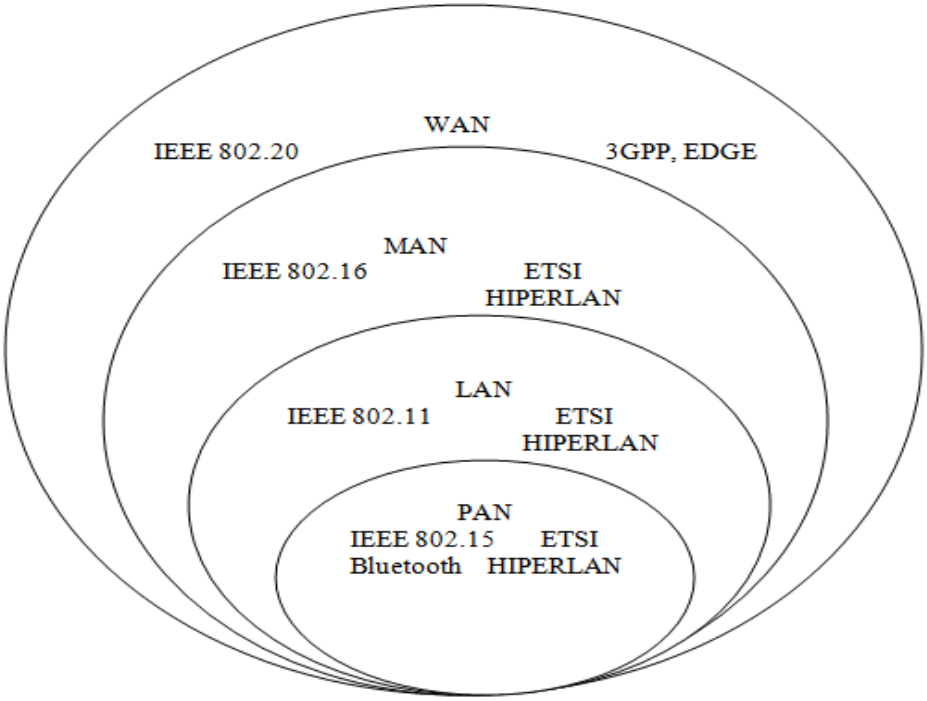

Fig. 1.1 Global wireless standards [5]

OFDM based modulation techniques have been proposed for IEEE 802.16 (WiMAX). The IEEE 802.16 standard is a wireless technology proposed which can revolutionize the broadband wireless access industry [3]. It is designed to provide services for the last mile broadband access in the Metropolitan Area Networks (MAN). The early versions of IEEE 802.16 standard employ a point to multipoint (PMP) architecture in 10-66 GHz, but the problem is the requirement of line of sight towers. The IEEE 802.16a extension does not require line of sight transmissions and works in relatively lower band of frequencies, i.e., 2-11 GHz. This can provide services up to 31-50 miles range with 70 Mbps data transfer

rates in the form of point to multipoint and mesh technologies [3]. IEEE 802.20 will be another standard of WiMAX to provide services in wide area networks.

1.2 OFDM Application in Digital Broadcasting

Multicarrier modulation has been used in Europe for broadcasting of digital signal for a long time. European standardization committee has adopted OFDM as the method of choice for the modulation of signals in several applications of digital audio and digital television, both for terrestrial and satellite transmission [33]. Coded orthogonal frequency division multiplexing (COFDM) has also been proposed for digital video broadcasting terrestrial (DVB-T). Digital video broadcasting services cover more than digital television. The wireless video covers the applications such as multimedia mobile and wireless data services. Multipath propagation is a major problem for a terrestrial broadcasting channel. Robust modulation schemes are required to mitigate the strong interference in channels. COFDM is suitable to combat against strong multipath fading. Proper arrangement of pilot signals in time and frequency slots in OFDM symbols provides an acceptable performance in mobile multimedia communication.

1.3 OFDM Based Multiple Access Techniques

Frequency spectrum is a shared resource among users, and needs an appropriate allocation technique so that each user can have a unique access. Spectrum becomes crowded because of the large demand for frequency allocation and a large number of users try to access the channel simultaneously. OFDM based multiple access techniques and hybrid systems have also been proposed. These hybrid systems can minimize the

impact of interference and efficiently use the frequency spectrum. In this section, we discuss about OFDM based multiple access techniques.

Frequency division multiple access (FDMA) divides the available bandwidth into many sub-channels and each sub-channel is assigned to a specific user. If all sub-channels are occupied, the next call cannot be placed until a channel is available. Channels are non-overlapping and guard intervals are used between two consecutive channels, which is a waste of available bandwidth. This technique is efficient if the network size is small but creates problems if the network size exceeds the number of available channels. OFDM-FDMA systems split the entire band into many sub-channels. Adaptive bit-loading is possible in each subcarrier which assigns different modulation schemes in order to allocate different number of bits to each subcarrier.

In time division multiple access (TDMA), the time frame is divided into slots. An integer number of time slots is assigned to each user. This allows each user to use the whole spectrum for a particular time interval. In TDMA methods, the frequency allocation is easier. Moreover, power requirements are low. Overhead is required in every frame for synchronization problem. In OFDM-TDMA systems, a particular user uses all subcarriers within the predetermined TDMA time interval. WLAN based systems have been developed using OFDM-TDMA technology, where each user uses OFDM modulation for data transmission.

The OFDM modulation technique has also been proposed to use with code division multiple access (CDMA) as a hybrid system. CDMA is a spread spectrum technique that uses direct sequence spread spectrum. Frequency spectrum is divided both in the time and

the frequency directions. All users in CDMA can use the whole channel for the entire time. In CDMA, narrow-band signals are multiplied by spreading signals, which are pseudo-noise code sequences with higher rates. Each code is unique and the destination can recover the message using the correct code sequence. In frequency-selective fading channels, orthogonality of codes is not guaranteed due to the inter-chip interference. In order to suppress this interference, OFDM properties are combined with the use of CDMA techniques. The longer OFDM symbol duration will greatly decrease the problem of acquiring synchronization of the spreading code in the receiver [3-5].

Orthogonal frequency division multiple access (OFDMA) is another promising scheme that attracted lot of interests. OFDMA is based on OFDM and shows robustness against inter-symbol interference in frequency-selective fading channels. One class of OFDMA systems is flash-OFDM, where the subcarriers are distributed among the mobile stations. Flash-OFDM uses fast hopping across all tones in a predetermined pattern. With fast hopping, one user uses one tone in an OFDM symbol and different tone in the next OFDM symbol. Flash-OFDM provides higher data rates when it is close to the base stations as different tones in an OFDM symbol could be modulated differently [3].

1.4 Objective of this thesis

Multicarrier modulation is a strong candidate for packet switched wireless applications and offers several advantages over single carrier systems. OFDM systems are viable solutions for achieving high data rates. Data transmission in wireless environments experiences delay spread which we have already discussed. In a single carrier system, an equalizer handles this detrimental effect for the delay spread. If the delay spread increases beyond the duration of one symbol, maximum likelihood sequence estimator structure is not easily implementable because of its exponentially increasing complexity [5]. Decision feedback type equalizers are also used in single carrier systems. The number of taps of the equalizer should be enough to cancel out the inter-symbol interference. One major problem for this type of equalizer is that the equalizer coefficients should be trained for every packet as the channel characteristics are different for each packet. A large overhead is required for this purpose. In multicarrier OFDM systems, this type of training sequence is not required. However, channel estimation is required for coherent data detection. Channel estimation is not an easy task in OFDM systems for proper data detection. A large number of techniques have already been proposed for channel estimation that we will discuss in later chapters in this thesis. The most popular technique is to assign pilot tones in OFDM symbols and channel estimation is performed based on those pilot tones at the receiving end for proper data detection. Pilot tones are generally inserted into the subcarriers of an OFDM symbol or in the consecutive OFDM symbols with a specific period. Channel capacity is wasted due to extra pilot tones in OFDM symbols.

In many applications of wireless communication, the channel introduces distortions and makes it hard to estimate the channel. In such situations, differential detection has been proposed for the data detection, where it is not needed to estimate the channel. In this thesis, we applied differential modulation both in frequency direction (in-frame) and time direction (inter-frame) for the data detection of OFDM systems. One of the advantages of differential detection is that it is very easy to implement with lower computational complexity but it can estimate the channel very accurately and it can improve the bit error rate (BER) performance for the estimated channel.

1.5 Methodology

We apply a semi-blind approach for the data detection using in-frame differential modulation. At first, we apply single differential modulation for the data detection and then we apply higher order differential modulations to investigate the performance improvements. It should be mentioned that in the in-frame modulation scheme, single differential uses only one pilot tone, whereas the double differential modulation scheme uses two pilot tones, and so on. Thus, overhead due to the reference symbols in conventional methods are minimized and the detection delay is reduced. We also apply differential modulation in consecutive OFDM symbols for the inter-frame modulation scheme to investigate the performance. In the inter-frame differential modulation scheme, only the first OFDM symbol is used for reference and no other symbols are used for pilot insertions. We use the double differential in-frame and the single differential inter-frame modulation scheme for channel estimation. We then use estimated channels iteratively in

our data detection process to improve the BER performance. We will show some results in later chapters.

1.6 Thesis Organization

In chapter 2, we discuss some of the benefits of the OFDM systems and provide basic block diagram for a typical OFDM systems. We discuss the block diagram, and then we show how to add cyclic prefix. We also discuss frequency-selective fading channels.

In chapter 3, differential OFDM systems are described. At first, we apply differential modulation in single carrier systems, where channels without memory have been used. Later, we show the block diagram for a differential OFDM system, where we use channels with memory (consists of more than one channel taps). The block diagram for differential encoder and decoder are shown and their working principles are then discussed. Both the in-frame and inter-frame differential modulation have been used. We also discuss about channel estimation in this chapter. At the last part of this chapter, we show least squares based technique for channel estimation, where data symbols of higher energy are used from an OFDM symbol.

In chapter 4, we show our simulation results. For the in-frame modulation, we apply higher order differential including single differential modulation to investigate the system performance. As double differential modulation scheme works better in high SNRs, we apply double differential for channel estimation. For the inter-frame modulation, we use single differential modulation scheme. BER performance and channel estimation error

comparison are also shown in this chapter. At last, we show performance improvement for the both modulation schemes using iterative techniques.

Chapter 5 gives the concluding remarks and suggestions for future study.

CHAPTER 2
OFDM SYSTEMS ARCHITECTURE

2.1 Introduction

Orthogonal Frequency Division Multiplexing (OFDM) is a multi-carrier modulation technique that divides the available spectrum into several subcarriers, each one being modulated by a low data rate stream. The concept of OFDM came from the multi-carrier modulation and demodulation technique. A simple multi-carrier communication system is the frequency division multiplexing (FDM) or multi-tone. In FDMA, each single channel is allocated for a specific user. The bandwidth allocation for each channel is typically 10 KHz – 30 KHz for voice communications where the minimum requirement for the speech signal is only 3 KHz [6]. The extra bandwidth is used for the guard interval to prevent channels from interfering each other. Therefore, a large portion of the bandwidth is wasted due to the extra spacing between channels. This problem becomes even worse when the channel bandwidth is narrow. OFDM can overcome this problem by dividing the available bandwidth into many orthogonal narrow-band channels. As all of the channels are orthogonal to one another their bandwidth can overlap, and thus the extra spacing between the adjacent channels can be eliminated. Bandwidth allocation for FDMA and OFDM are shown in Fig. 2.1 and Fig. 2.2.

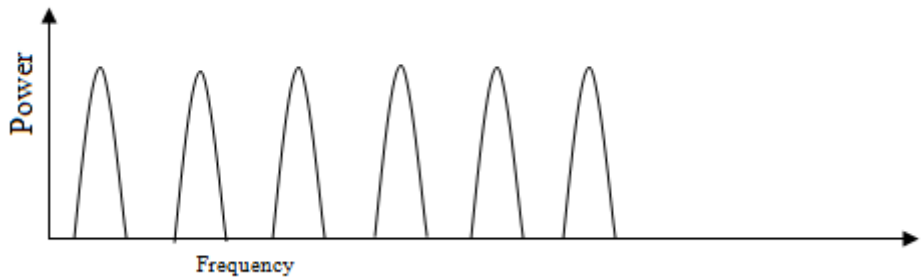

Fig. 2.1 Frequency spectrum of FDMA systems

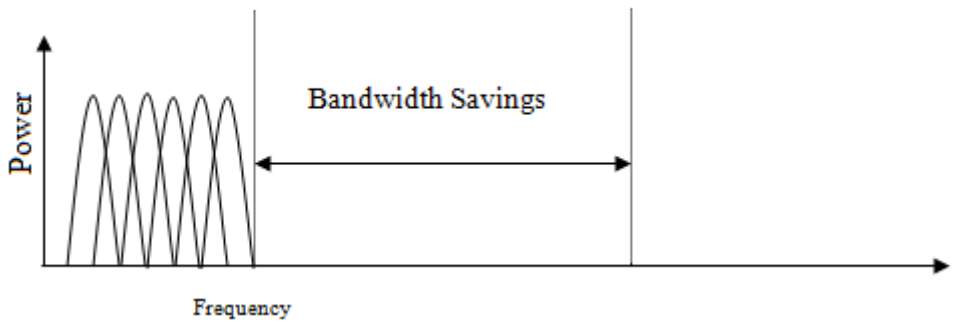

Fig. 2.2 Frequency spectrum of OFDM systems

Orthogonality of subcarriers is illustrated in Fig. 2.3. The spectrum of each carrier has a null at the center frequency of other carriers, thus there will be no interference between different carriers. Note that signals Φ_l and Φ_m, are orthogonal if

$$\int_0^T \Phi_l(t)\Phi^*{}_m(t)\,dt = \begin{cases} c, & \text{for } l = m \\ 0, & \text{for } l \neq m \end{cases} \tag{2.1}$$

where c is a constant. The frequency spectrum of OFDM signal is shown in Fig. 2.4. Each of the carrier frequencies has a narrow band and provides a low data rate resulting in a high tolerance to multipath delay spread.

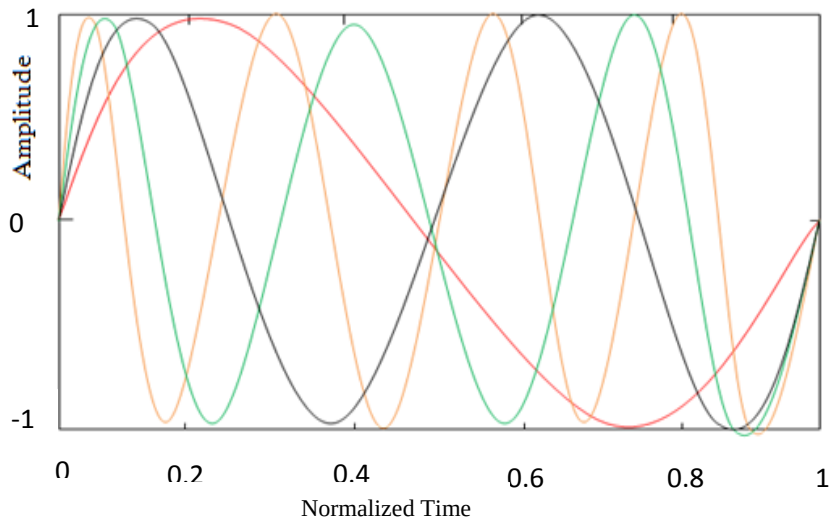

Fig. 2.3 An OFDM system using four orthogonal subcarriers

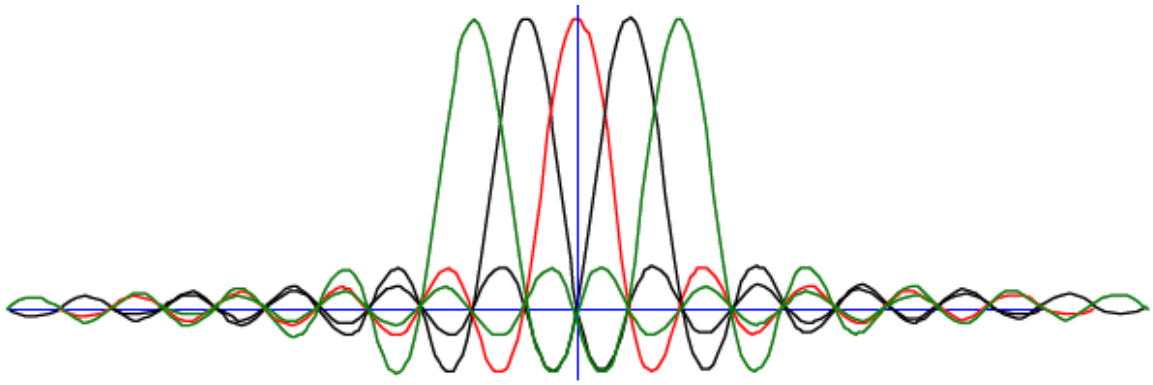

Fig. 2.4 Frequency spectrum of an OFDM signal with five subcarriers

2.2 OFDM Signal Generation

Next, we discuss the baseband representation of OFDM signals. In OFDM systems, total bandwidth is subdivided into N orthogonal subcarriers which are modulated by

separate low data rate streams. The number of subcarrier N is equal to 64 in IEEE802.11a (WLAN) [3]. Each of the baseband subcarriers can be expressed as:

$$\Phi_k(t) = e^{j2\pi f_k t} \tag{2.2}$$

where f_k is the frequency of the kth subcarrier. An OFDM symbol consisting of N subcarriers is expressed as [1]:

$$S(t) = \frac{1}{N}\sum_{k=0}^{N-1} x_k \Phi_k(t) \ , \qquad 0 < t < NT_s \tag{2.3}$$

here x_k is the kth data symbol taken from the baseband modulated signal constellation, NT_s is the OFDM symbol length and T_s is the sampling time. The frequency of each subcarrier is given by

$$f_k = \frac{k}{NT_s} \tag{2.4}$$

where k is the subcarrier index.

Replacing $\Phi_k(t)$ in (2.3) and sampling at the frequency $\frac{1}{T_s}$, the discrete version of (2.3) will become:

$$S(nT_s) = \frac{1}{N}\sum_{k=0}^{N-1} x_k e^{\frac{j2\pi kn}{N}} \ , \quad 0 \le n \le N-1 \tag{2.5}$$

A close observation reveals that (2.5) is nothing but an inverse discrete Fourier transform (IDFT) of the constellation symbols x_k. Thus, the discrete Fourier transform (DFT) can be utilized in the receiver for the demodulation of OFDM signals.

2.3 Basic Block Diagram

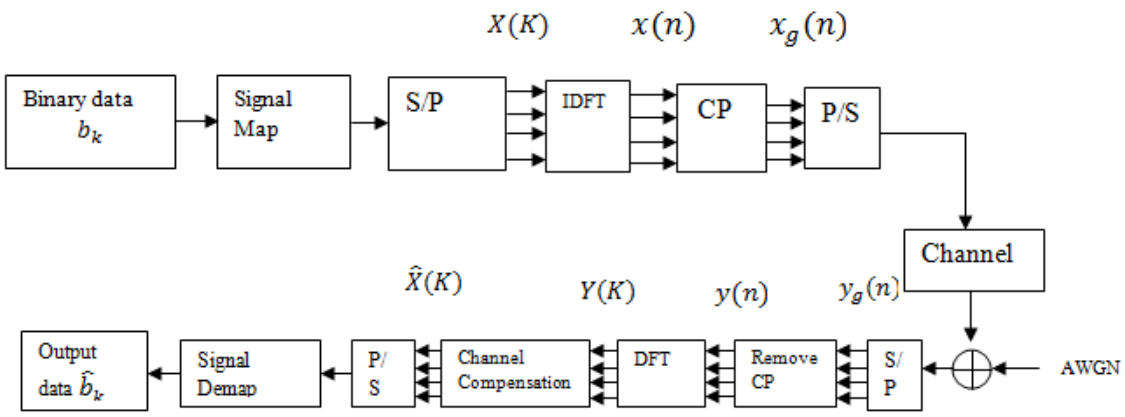

Fig. 2.5 Basic block diagram for OFDM systems

Fig. 2.5 shows the basic block diagram for OFDM systems. The binary high speed data is first grouped and mapped into complex data in the signal mapper. Generally, quadrature amplitude modulation (QAM) or phase shift keying (PSK) is used. These complex data are converted into parallel using a serial to parallel converter, where the number of parallel paths is equal to the number of subcarriers. The parallel data is modulated using the inverse discrete Fourier transform operation. Guard interval (GI) is used in each of the OFDM symbol to combat the inter-symbol interference (ISI). The parallel data is then serially transmitted through the frequency-selective fading channel in additive white Gaussian noise (AWGN) environment. At the receiver, reverse processes are employed. The noise corrupted serial data is converted into parallel and then the guard interval is removed from each of the OFDM symbols. Discrete Fourier transform (DFT) is applied to transform the time domain signal into frequency domain. After channel effects are compensated, the complex baseband signal is obtained and

demodulation is applied to get the output binary data. Each of the blocks in Fig. 2.5 is explained in the next section.

2.3.1 QPSK Modulation

Quadrature phase shift keying (QPSK) has been used throughout this thesis. The term "quadrature" implies that there are only four possible phases which the carrier can have at a given time. This is why, this type of modulation is sometimes called 4-PSK modulation. In QPSK, carrier is varied in phase while the amplitude and frequency are kept constant. Constellation diagram is shown in Fig. 2.6, where four phases are labeled {A, B, C, D} corresponding to one of {0, 90, 180, 270} degrees phase change. Since there are four possible phases, 2 bits of information are conveyed in each time slot.

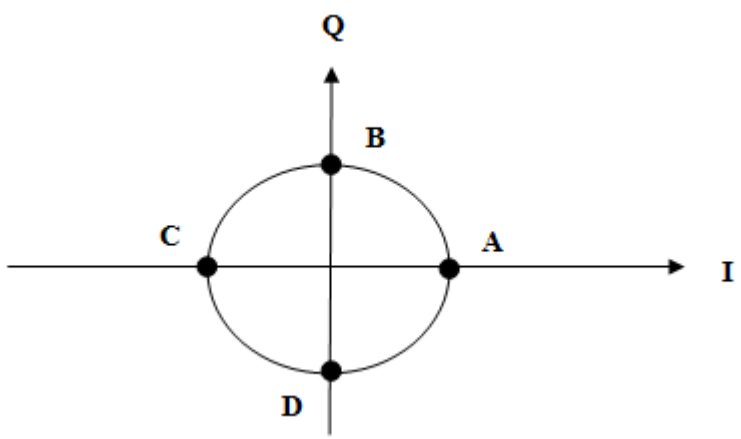

Fig. 2.6 Signal constellation diagram for QPSK

Table 2.1 Signal Mapping

Phase (Degrees)	State	Binary data
0	A	00
90	B	01
180	C	11
270	D	10

2.3.2 IDFT/DFT

At the transmitter parallel data are stacked up into frames, each frame is converted into time domain using the inverse discrete Fourier transform (IDFT). At the receiving end, DFT is applied to obtain frequency domain signal. So IDFT/DFT is the most critical part in OFDM systems where OFDM modulation and demodulation are performed. DFT for a finite length sequence of length N is defined as [2]:

$$X(K) = \sum_{n=0}^{N-1} x(n) W_N^{Kn} \ , \quad K = 0,1, \dots , \ N-1 \tag{2.6}$$

where $W_N = e^{-j\frac{2\pi}{N}}$.

The inverse discrete Fourier transform is given by [2]:

$$x(n) = \frac{1}{N} \sum_{K=0}^{N-1} X(K) W_N^{-Kn} \ , \ n = 0,1, \dots , \ N-1 \tag{2.7}$$

It should be mentioned that both $x(n)$ and $X(K)$ can be complex number. Equation (2.6) indicates that N complex multiplications and $N-1$ complex additions are required for the computation of each value of the DFT. To compute N values of DFT, it will require

N^2 complex multiplications and $N(N-1)$ complex additions. Direct computation of DFT using (2.6) is inefficient. Utilizing the symmetry and periodicity properties of the phase factor W_N, as given below, the DFT can be efficiently calculated through the fast Fourier transform algorithm.

$$\text{Symmetry property: } W_N^{K+\frac{N}{2}} = -W_N^K \tag{2.8}$$

$$\text{Periodicity property: } W_N^{K+N} = W_N^K \tag{2.9}$$

The FFT algorithm is based on decomposing the sequence $x(n)$ into successively smaller subsequences both in time domain and frequency domain. Here, we will only discuss the decimation-in-time algorithm, where the DFT length N is normally an integer power of 2, i.e., $N = 2^p$. As N is an even integer, we can compute $X(K)$ by separating $x(n)$ into two $(\frac{N}{2})$ point sequences. One part will contain the even-numbered points of $x(n)$ and the another part will contain odd-numbered points of $x(n)$.

$$X(K) = \sum_{n\ \text{even}} x(n) W_N^{nK} + \sum_{n\ \text{odd}} x(n) W_N^{nK} \tag{2.10}$$

After simple calculations, it can be shown that

$$X(K) = \sum_{r=0}^{\frac{N}{2}-1} x(2r)\, W_{\frac{N}{2}}^{rK} + W_N^K \sum_{r=0}^{\frac{N}{2}-1} x(2r+1)\, W_{\frac{N}{2}}^{rK}$$

$$= G(K) + W_N^K H(K), \qquad K = 0,1,\ldots, \quad N-1 \tag{2.11}$$

Each of the sums in the above equation is an $\frac{N}{2}$ -point DFT. Implementation of (2.11) is shown below, where $N = 8$.

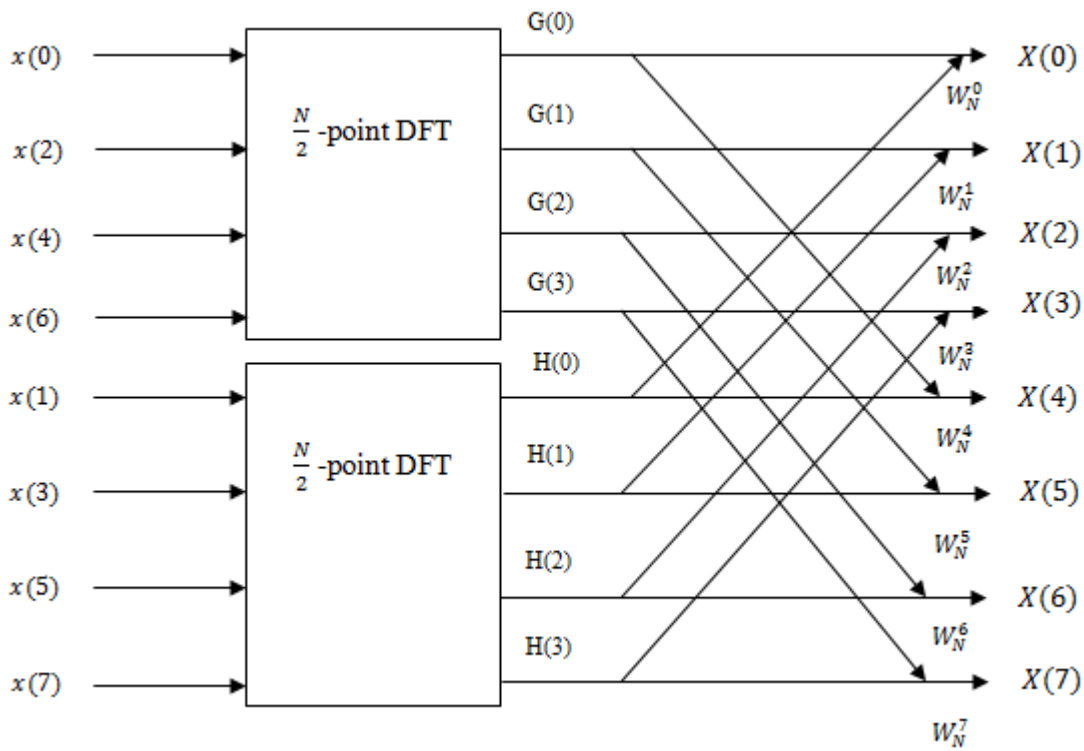

Fig. 2.7 Decimation in time decomposition of an 8-point DFT into two 4-point DFT [2]

If $N = 2^p$, where p is any integer, then the decomposition can be done for $p = \log_2 N$ times. Thus, the number of complex multiplications and additions is of the order $N \log_2 N$ [2].

2.3.3 Inter-carrier Interference (ICI)

Despite robustness against multipath fading channels, OFDM systems often suffer from carrier frequency offsets. Frequency offset occurs due to the unmatched local oscillators at the transmitter and the receiver. Therefore, subcarriers can be shifted from their original positions and the receiver experiences non-orthogonal signals. The loss of orthogonality introduces inter-carrier interference (ICI) at the receiver, which severely degrades the system performance.

Transmission of a signal through time-variant channel also destroys the orthogonality of subcarriers and introduces ICI. Due to this ICI, OFDM systems become very sensitive to frequency offsets and degrade the achievable bit error rate (BER) performance. Frequency offset correction techniques for OFDM systems can be classified into two categories: data aided and non-linear techniques. In data aided techniques, known bit patterns or pilot tones are inserted in OFDM symbols to estimate the timing or frequency offsets. On the other hand, cyclostationarity characteristics of the signal are utilized in non-linear techniques to estimate frequency offsets [3].

2.3.4 Inter-symbol Interference (ISI)

In many wireless systems, multipath channels create problems when the transmitted signal reflects from several objects. As a result, multiple delayed versions of the input signal arrive in the receiver at different time spans. Due to the multiple versions of the input signal, received OFDM symbol becomes distorted by the previously transmitted OFDM symbol. This problem is called as inter-symbol interference (ISI). This effect is similar to the inter-symbol interference of single-carrier systems. The inter-symbol interference problem is shown in Fig. 2.8.

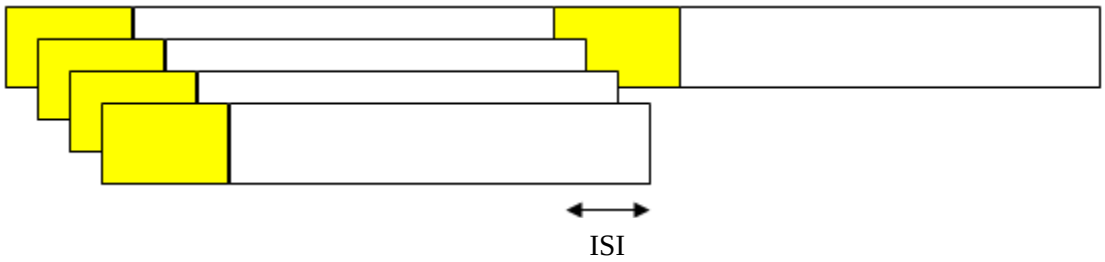

Fig. 2.8 Example of inter-symbol interference

First few samples of an OFDM symbol are distorted by inter-symbol interference. This problem can be minimized by adding extra guard interval in front of every OFDM symbol.

2.3.5 Cyclic Prefix

Due to the multipath fading environment, channel dispersion causes consecutive OFDM symbols to overlap and introduce inter-symbol interference. This degrades the performance of the overall system and destroys the orthogonality of subcarriers. To prevent ISI and to preserve the orthogonality, a guard interval is used in every OFDM symbol. Generally, last portion of an OFDM symbol is repeated in front of that symbol. This type of guard interval is called cyclic prefix (CP). As no extra information is transmitted through CP, this extended part is removed at the receiving end. This cyclic prefix should be at least equal to or longer than the maximum delay spread of the channel impulse response to avoid ISI. Due to the insertion of CP, cyclically-extended OFDM symbols now appear periodic when convolved with channel impulse response and the linear convolution converts into a cyclic convolution. A cyclic convolution is just a scalar multiplication in frequency domain. So, the effect of the channel becomes multiplicative. In order to minimize the channel effect, another multiplication is performed at the receiving end in frequency domain which acts like an inverse filter of the channel impulse response. This type of filter is known as equalizer. Technique for the insertion of cyclic prefix is shown in Fig. 2.9. Here, T_{cp} is the length of cyclic prefix, T_s is the original OFDM symbol length and $T = T_{cp} + T_s$ is the length of the transmitted symbol. The only disadvantage of cyclic prefix is that it increases transmitting energy due to the extra data in payload and hence reduces the efficiency of the overall system.

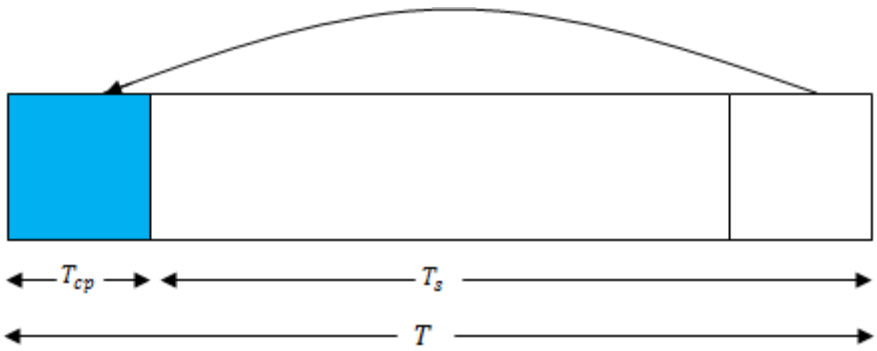

Fig. 2.9 Insertion of Cyclic Prefix (CP)

CP is used in multicarrier systems for equalization of frequency-selective fading channels. At the receiving end, CP is discarded to avoid inter-symbol interference and the fast Fourier transform is applied to the truncated block to convert frequency-selective channels into flat-faded independent sub-channels. Each of the sub-channels corresponds to a different subcarrier. Equalization is possible if the channel frequency response doesn't contain any zero in any of the sub-channels [26]. Zero padding has recently been proposed as an alternative to the traditional cyclic prefix for multicarrier systems and it can recover data symbols regardless of the channel zero locations. In ZP-OFDM transmission, zero symbols are appended after the IDFT block. Number of zero symbols is kept equal to the length of traditional CP without increasing bandwidth requirement. Zero padded OFDM systems guarantee symbol recovery and assure FIR equalization [27].

2.4 Channel Model

In most practical wireless communication systems, obstacles like earth, buildings, trees, etc., are present in the propagation path. When a signal is transmitted over this radio channel it reflects, diffracts and scatters from those obstacles. The transmitted signal arrives at the receiving end through multiple paths which is called multipath propagation. This complete set of propagation paths is known as multipath channels. Multiple versions of input signal arrive in the receiver at different times. Each of the received signals may have different amplitude, phase and delay. When the received signals are mixed together, they may add up constructively or destructively depending on the signals phases. Multipath propagation is described in Fig. 2.10.

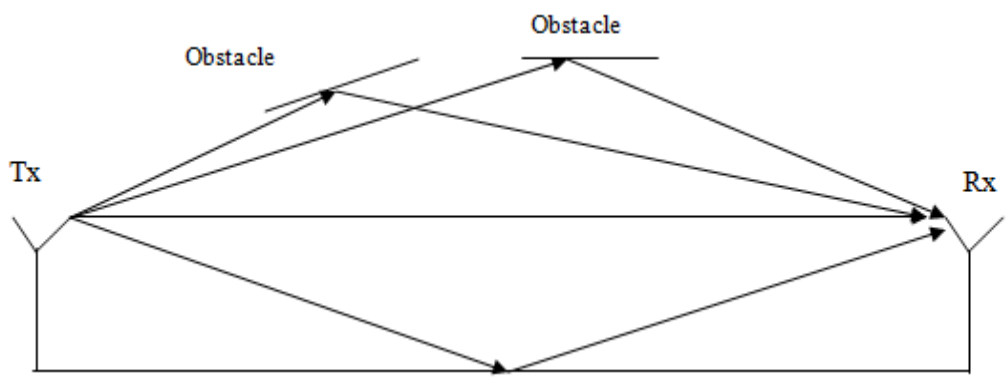

Fig. 2.10 Multipath propagation situations

The impulse response of a multipath channel exhibits time delay spread resulting variations of received signal strength with frequency and time. These variations are called fading characteristics. RMS delay spread (τ_{RMS}) is the metric to characterize the delay in multipath channels [3]. The time between the first and the last received components is called the maximum delay spread which is expressed as τ_{max} in Fig 2.11.

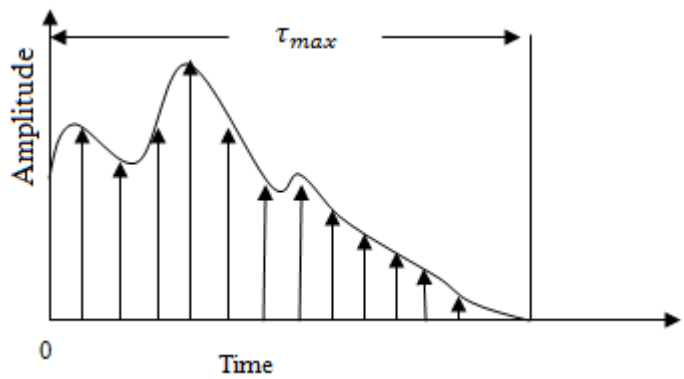

Fig. 2.11 Channel spreading in time

Another important parameter for the characterization of fading channels is coherence bandwidth B_c. The coherence bandwidth measures the range of frequency over which two frequencies of a signal are likely to experience the same kind of fading. Fading effects over a communication channel is determined by the relationship between the bandwidth B_s of the information signal and the coherence bandwidth B_c of the channel [3].

Flat fading or frequency non-selective fading occurs when the bandwidth of the information signal B_s is less than the coherence bandwidth i.e.,

$$B_s \ll B_c$$

$$T_s \gg \tau_{RMS}$$

where B_s is the bandwidth of the input signal, B_c is the coherence bandwidth, T_s is the symbol time and τ_{RMS} is the RMS delay spread. In this case, the whole signal spectrum is affected equally.

A signal undergoes frequency-selective fading if the bandwidth of the information signal is greater than the coherence bandwidth i.e.,

$$B_s > B_c$$

$$T_s < \tau_{RMS}$$

where B_s is the bandwidth of the input signal, B_c is the coherence bandwidth, T_s is the symbol time and τ_{RMS} is the RMS delay spread. Signal frequency components are not affected equally due to the frequency-selective fading channels. Some portions of the signal may experience gain and other portions may have dips due to the cancellation of certain frequencies. In an OFDM system, available bandwidth is divided into many narrow band subcarriers which are almost flat in the interval of two individual subcarriers. So the input signal experiences flat fading when it passes through this channel. Fig. 2.12 shows how a frequency-selective fading channel turns into flat fading channels.

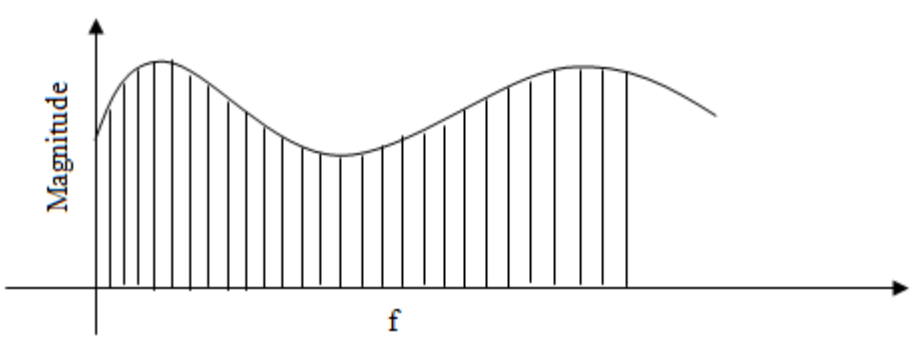

Fig. 2.12 Frequency-selective fading channel divided into flat fading sub-channels

Constructive and destructive phenomenon of multipath components in flat fading channel can be approximated by Rayleigh distribution if there is no single dominant path.

In our case, we have used frequency-selective fading channel where the impulse response of the channel is described as [5]:

$$h(\tau) = \sum_{k=0}^{M-1} a_k e^{-j\theta_k} \delta(\tau - \tau_k) \tag{2.12}$$

here a_k, θ_k and τ_k are the propagation paths' amplitudes, phases and delays, respectively, and τ_k is the path delay of path k. M is the total number of the paths. Each path gain a_k is a random variable with a Rayleigh distributed magnitude. Probability density function for the Rayleigh distribution is given by [28]:

$$P(x) = \frac{x}{\sigma^2} e^{-\frac{x^2}{2\sigma^2}}, \qquad 0 \leq x \leq \infty \tag{2.13}$$

In an indoor setting, path gain a_k and delay τ_k can be considered relatively static where the change of phases θ_k is uniformly distributed over the range $[0, 2\pi)$.

In the case of time-varying channels, the channel impulse response can be represented as [28]:

$$h(\tau;\ t) = \sum_{k=0}^{M-1} a_k(t) e^{-j\theta_k(t)} \delta(\tau - \tau_k(t)) \tag{2.14}$$

The frequency response of this time-varying channel is defined as:

$$H(f; t) = \int_{-\infty}^{\infty} h(\tau; t) e^{-j2\pi f\tau} d\tau$$

$$= \sum_{k=0}^{M-1} a_k(t) e^{-j[2\pi f\tau_k(t) + \theta_k(t)]} \tag{2.15}$$

In an indoor setting, path gains and delays are considered to be static, phases $\theta_k(t)$ may change rapidly for small displacements, which makes the channel time dependent. In

practice, path gains and propagation delays are usually considered to vary as a function of frequency. This variation occurs because of time-varying path lengths. If we use narrow bandwidth for the data transmission, we can ignore this frequency variation. Although individual path gains and delays are assumed to be independent of frequency, the overall channel response $\mathrm{H(f;t)}$ can still vary with frequency. This happens as different paths have different time delays. Equation (2.15) tells us that the frequency response $H(f;t)$ is a slowly varying function of time t. And hence, $h(\tau,t)$ can be considered as the impulse response of the system at a fixed time t. In typical multipath fading channels, time-scale at which the channel varies is considered to be longer than the delay spread of the impulse response. Normally, the time taken for the channel to change significantly is of the order of milliseconds, and the delay spread is of the order of microseconds [28]. Due to the phase variation of multiple propagation paths, a small phase offset can be observed at the receiving end. To compensate this phase offset, differential detection systems have been used in this thesis.

2.5 Chapter Summary

In this chapter, basic OFDM systems have been introduced. We have discussed some benefits of OFDM systems, and the principle of orthogonality. A brief overview is given for the IDFT and DFT to show how it helps the modulation and demodulation processes in OFDM systems. Cyclic prefix has been utilized to combat the effects of multipath propagation. A significant part of an OFDM symbol is repeated and the length of this cyclic prefix should be at least equal to the maximum channel delay to reduce the ISI completely. To reduce the channel effect, different kinds of equalization techniques are used at the receiving end. In most of the cases, pilot symbols are used for these equalization techniques. To avoid the transmission of extra data and channel information, we have introduced differential detection systems where received symbols are utilized to take decision directly for transmitted data. Differential detection systems will be discussed in the next chapter.

CHAPTER 3
DIFFERENTIAL DETECTION FOR OFDM SYSTEMS

3.1 Introduction

In this chapter, we study data detection using differential modulation schemes in Orthogonal Frequency Division Multiplexing (OFDM) systems. Data can be encoded in the relative phase of consecutive OFDM symbols (inter-frame modulation) or in the relative phase of symbols in adjacent sub-channels (in-frame modulation). Both single differential and double differential in-frame modulation can be used for the detection of data without prior knowledge of channel coefficients using only one pilot tone in single differential modulation and two pilot tones in double differential modulation. We will also show that higher order differential schemes don't have any further advantage in this respect. We use single differential modulation scheme for inter-frame modulation, where only one OFDM symbol is used as a reference. After detecting the output data, we also use differential modulation for estimating channel coefficients. Simulation results are shown in results and discussion chapter. Data detection using differential modulation is very easy and channel coefficients can be estimated with high accuracy. We apply coherent detection using our estimated channel to improve the system performance. Iterative technique can be used to minimize the channel estimation error and the estimated channel can further be used to improve BER performance for in-frame differential detection. We also use a new technique for channel estimation using single differential inter-frame modulation by reducing 15% low energy data from an OFDM symbol without compromising error performance.

3.2 Why Differential Modulation

In coherent detection of OFDM systems, it is necessary to have knowledge about channel impulse response for proper data detection. It is not always an easy task to get information about the channel in wireless communication especially when the channel is time-variant or fading. Channel effects on output data cannot be ignored without proper estimation of channel impulse response. Researchers have also focused on the estimation of channels for OFDM systems to overcome its effects on output data. A large number of techniques have already been proposed for channel estimation. One of the popular techniques proposed [8] is based on pilot arrangement in OFDM systems where pilot means the reference signal used by both transmitters and receivers. Pilot tones can be inserted into the subcarriers of an OFDM symbol or can be inserted in the consecutive OFDM symbols with a specific period. The first process is called the block type pilot channel estimation where pilots are inserted in frequency direction and the later is called comb-type where time direction is followed [3]. It has been observed that the channel capacity is wasted due to the transmission of a large number of pilot tones. To overcome the transmission loss, techniques like blind channel estimation have been proposed in [11]-[13]. Well known least-squares (LS) and minimum mean square error (MMSE) techniques have been proposed in [9] for channel estimation.

In many applications of digital communications, channel introduces random frequency shift or phase distortions into the carrier and makes it impossible to estimate the channel and hence output data. Situation becomes even worse in case of fading channel. In such situations, researchers have introduced techniques for data detection where it is not needed to estimate the channel at first. One of those techniques is to use differential

modulation (DM) for data detection without any channel information which can also overcome the channel effect. This type of modulation technique has already been used for fast fading channels [22]. Single differential modulation has been proposed for OFDM systems both for inter-frame and in-frame differential modulation [22]. Double differential has also been proposed for inter-frame modulation [24]. As double differential modulation works better in high signal to noise ratios (SNRs), we can use it to improve the accuracy for channel estimation. At higher SNRs, double differential can estimate the channel coefficients very accurately. Once we have our estimated channel, we can also use it in coherent data detection to improve the system performance.

The main purpose of using differential detection in OFDM systems is to avoid channel estimation and equalization. But after detecting the output data, we can also use differentially detected data to estimate channel coefficients. Once we have our estimated channel, we can use it for data detection to improve BER performance. Channel estimation using differential modulation is easy and channel coefficients can be estimated very accurately with a minor increase in complexity.

Incoherent detection using classical DPSK causes an SNR loss of approximately 3 dB compared to coherent detection. Here, we use differential modulation in consecutive OFDM symbols for inter-frame modulation which will minimize this loss. Instead of inserting pilot tones in every OFDM symbols, we use only one OFDM symbol as a reference for differential modulation. Except the reference symbol, no overhead is required for inter-frame modulation. This technique is easy and it has low complexity to estimate the channel accurately.

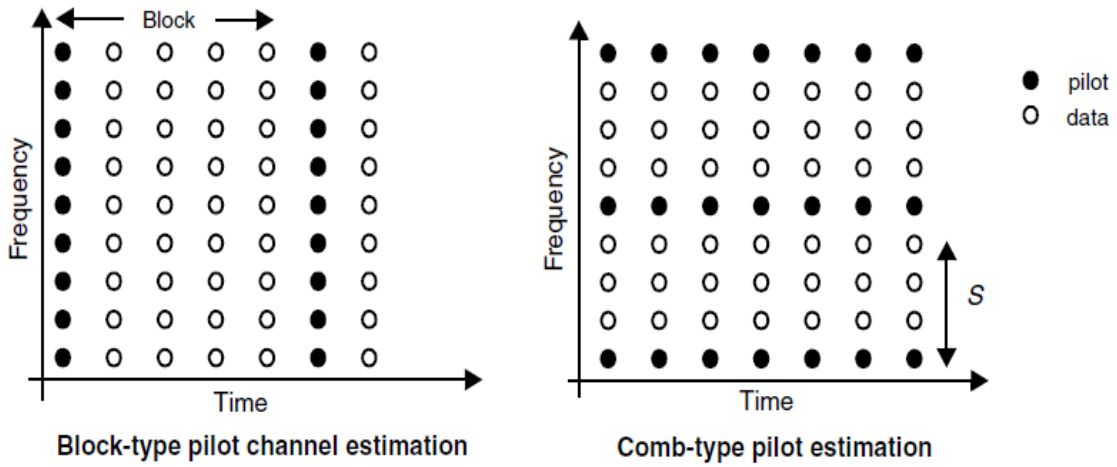

Fig. 3.1 Conventional pilot insertion techniques [3]

We applied semi-blind approach for data detection using in-frame differential modulation. Both single differential and double differential have been used for in-frame modulation. In conventional pilot estimation methods, pilot tones are inserted in every OFDM symbols for the purpose of data detection and channel estimation. In our method, single differential modulation uses one pilot tone, whereas double differential uses two pilot tones. Based on reference tones all other transmitted tones are estimated at the receiving end. Thus, overhead due to the reference symbols in conventional methods are minimized and the detection delay is reduced. If the frequency response of the channel doesn't vary significantly from one tap to the next, our method gives very good results. This happens mostly when the number of taps is significantly less than the length of the OFDM symbol. After proper detection it is also possible to use those estimated symbols to estimate the channel coefficients. Here, we validate our results by simulating bit error performance of OFDM systems using differential modulation. Moreover, we compare our results for channel estimation using in-frame and inter-frame differential modulation.

In our case, we have used multipath frequency-selective fading channel. Phase distortions are likely to be present in the received signal due to the imperfect knowledge of the phase of carrier, fading effects and multipath propagation. Differential encoding and decoding are used to compensate this phase distortions. We used this differential encoding and decoding as an alternative to coherent channel estimation and equalization. Both single differential and double differential modulation has been used in this thesis. In single differential modulation, data can be encoded in the relative phase of symbols in the adjacent sub-channels which is not robust in the case where a significant phase distortion is present. In such situations, higher order differential encoding gives better performances. Instead of using pilot tones in every subcarrier or in every OFDM symbol, we will use only one pilot tone for single differential and two for double differential. Channel capacity also increases because few pilot tones are used. In the next section, we will give a short review on single and double differential modulation for single carrier systems. Later, we will discuss about OFDM systems with differential modulation.

3.3 Differential modulation

Incoherent detection causes some performance loss in comparison to coherent detection. But data detection using differential modulation is very easy and it has low complexity. Moreover, channel can be estimated very accurately at higher SNRs and the estimated channel can be used in coherent detection to improve the system performance. Two types of differential schemes have been used in this chapter: in-frame differential modulation and inter-frame differential modulation. In the case of in-frame differential scheme, we also use higher order differential modulation including single differential scheme. Using differential modulation, it is possible to avoid the need to know the channel taps in the detection process. Here, as a background, we give a short review of single differential modulation (SDM) and double differential modulation (DDM) schemes for single carrier systems in a simpler setting of channels without memory. Later, we will discuss about OFDM systems with differential modulation.

3.3.1 Single Differential Modulation

Take a single carrier channel without memory. When there is a frequency offset between the transmitter and receiver, we have

$$\mathrm{Y(K)} = \mathrm{h}e^{j\omega K}\mathrm{S(K)} + \mathrm{W(K)} \tag{3.1}$$

where $Y(K)$ and $S(K)$ are received and transmitted signals, respectively, $W(K)$ is an additive white Gaussian noise and h is the unknown channel.

In a single differential modulation based system, information is encoded as a first order phase difference. Differentially modulated signal $S(K)$ is obtained from $Z(K)$ in the following way:

$$S(K) = S(K-1)Z(K), \quad K = 1,2,\ldots \tag{3.2}$$

where $Z(K)$ denote the unitary symbols belonging to the QPSK constellation to be transmitted at the time K and $|S(0)| = 1$. This $S(0)$ is the only pilot tone that we are using for transmission in single differential modulation.

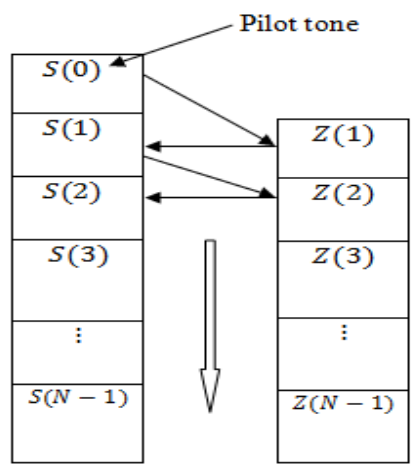

Fig. 3.2 Single differentially encoded frame

In the absence of noise, using (3.2) in (3.1) we get:

$$Y(K)Y(K-1)^{\star} = |h|^2 Z(K) \tag{3.3}$$

where $(.)^{\star}$ denotes complex conjugate. Equation (3.3) suggests the following rule for the detection of $Z(K)$ from $\{Y(K)Y(K-1)\}$ [15]:

$$\hat{Z}(K) = \min_{Z(K)\in C}\left|\arg\big(Z(K)\big) - \arg(Y(K)Y(K-1)^{\star})\right| \tag{3.4}$$

where C is the unitary symbol constellation under consideration. The discrete version of single differential encoder and decoder is described in Fig. 3.3.

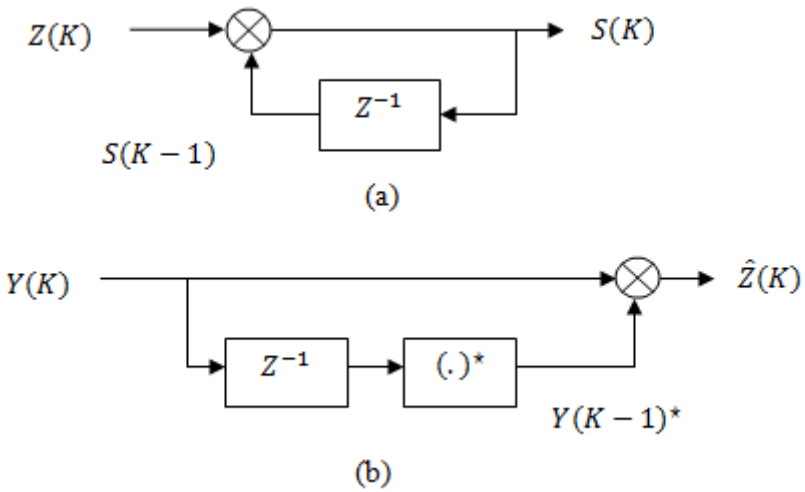

Fig. 3.3 Single differential (a) Encoder and (b) Decoder

3.3.2 Double Differential Modulation

Detectors of double differential modulation generally work using three consecutive received data symbols for decoding the current symbol, whereas the single differential modulation uses only two consecutive symbols. Thus two levels of single differential modulation can be used to implement the double differential modulation and the decoding process has slightly more complexity compared to the single differential modulation.

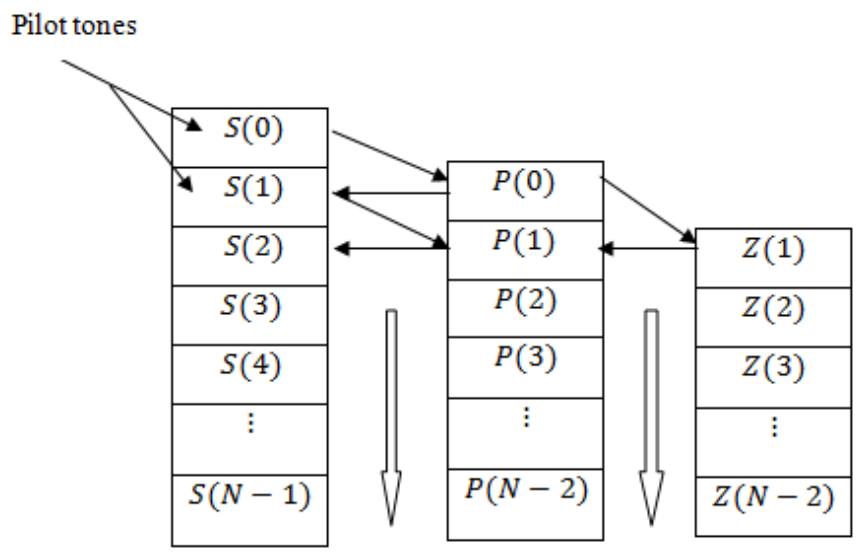

Fig. 3.4 Double differentially encoded frame

Let Z(K) denote the unitary symbols belonging to the QPSK constellation to be transmitted at the time K. Symbols Z(K) are encoded into S(K) in the following way:

$$P(K) = P(K-1)Z(K)$$

$$S(K) = S(K-1)P(K), \qquad K = 1,2, \quad \ldots\ldots \qquad (3.5)$$

here $|S(0)| = |S(1)| = 1$ and these are the transmitted pilot tones. As $|Z(K)| = 1$ for the QPSK symbols, it follows from equation (3.5) that $|S(K)| = |P(K)| = 1$, when $K > 0$. Block diagram of the encoder and decoder for double differential modulation is shown in Fig. 3.5. To describe the working principle of Fig. 3.5, define $Y(K) = e^{j\theta(k)}$ where $\theta(k)$ represents the phase angle of Y(K) in radians.

$$V(K) = Y(K)Y(K-1)^{\star}$$

$$= e^{j\theta(K)}.\, e^{-j\theta(K-1)}$$

$$= e^{j(\theta(K)-\theta(K-1))} \qquad (3.6)$$

$$\hat{Z}(K) = V(K).V(K-1)^{\star}$$

$$= e^{j(\theta(K)-\theta(K-1))}.e^{-j(\theta(K-1)-\theta(K-2))}$$

$$= e^{j(\theta(K)-2\theta(K-1)+\theta(K-2))} \tag{3.7}$$

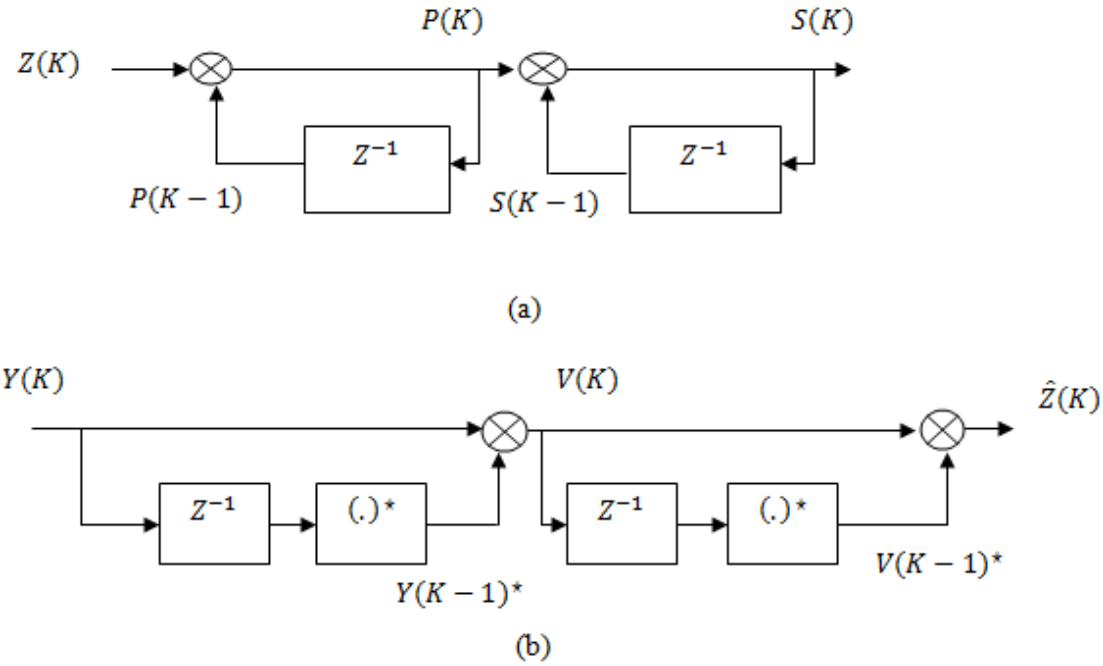

Fig. 3.5 Double differential (a) Encoder (b) Decoder

If $\Delta\theta(K)$ denotes the phase angle of $\hat{Z}(K)$ then

$$\Delta\theta(K) = \theta(K) - 2\theta(K-1) + \theta(K-2) \tag{3.8}$$

Based on (3.8) rule for the detection of $Z(K)$ has been shown in [15] as follows :

$$\hat{Z}(K) = \min_{Z(K)\in C}|\arg(Z(K)) - \arg(Y(K)Y(K-1)^{\star 2}Y(K-2))| \tag{3.9}$$

where C is the unitary symbol constellation under consideration. Equation (3.9) has been used as a decision rule for double differential detection systems.

3.4 OFDM Systems with Differential Modulation

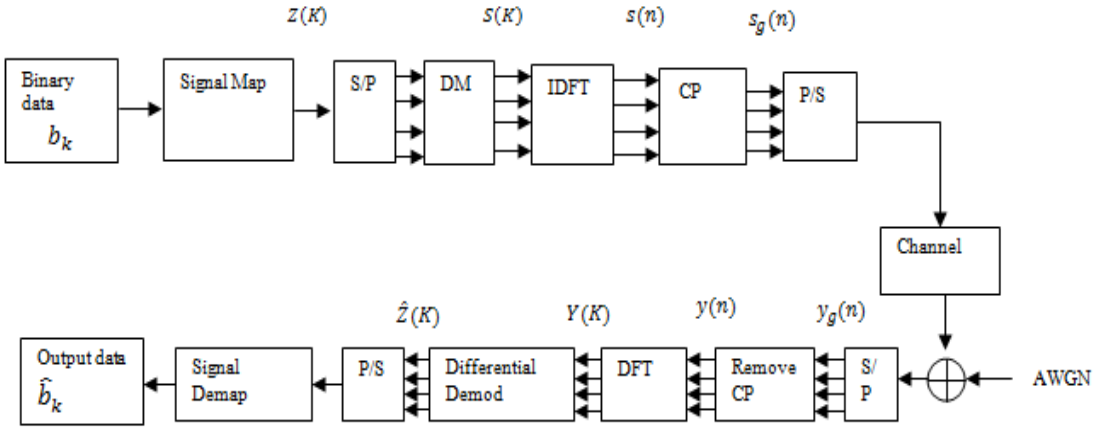

Fig. 3.6 Block diagram of an OFDM system with differential modulation

An OFDM system with differential modulation has been shown in Fig. 3.6. Here, we have used two extra blocks with the typical OFDM systems. Differential modulator should be used before the IDFT block for differential modulation and a demodulator in the receiving end, after DFT block for differential detection. The binary information is first grouped and mapped into Z(K) based on the modulation scheme. Differential modulation is applied and the symbols Z(K) are converted into differentially modulated symbols S(K) where K extends from 0 to $N-1$. There are two possible ways to perform differential modulation in OFDM systems. Data can be encoded in the relative phase of the consecutive samples of an OFDM symbol (see Fig. 3.7(a)) or in the relative phase of adjacent OFDM symbols in each sub-channel (see Fig. 3.7(b)). The former one is called in-frame modulation, where the later one is called inter-frame modulation. We use single differential and double differential for in-frame modulation, where single differential uses

one pilot tone and double differential uses two pilot tones. This technique minimizes the overhead in comparison to conventional pilot insertion methods and reduces the detection delay. We use single differential for inter-frame modulation, where the first OFDM symbol is used as a reference symbol. Consecutive OFDM symbols are modulated with respect to the reference symbol. In inter-frame modulation, it should be mentioned that only one OFDM symbol is used for reference. Any extra pilot insertion will not be required in other OFDM symbols. Each and every subcarriers can be used for data transmission and hence increase the efficiency. After differential modulation, parallel data sequence of length N is sent to the IDFT block to convert the frequency domain signal S(K) into time domain signal s(n) based on the following equation:

$$\mathrm{s(n) = IDFT\{S(K)\}}, \quad \mathrm{n} = 0,1,2 \quad \ldots, \quad \mathrm{N} - 1$$

$$= \frac{1}{\mathrm{N}} \sum_{\mathrm{K}=0}^{\mathrm{N}-1} \mathrm{S(K)} e^{j2\pi \frac{\mathrm{Kn}}{\mathrm{N}}} \tag{3.10}$$

The inter-symbol interference (ISI) can be avoided with a small loss of transmission energy using the concept of cyclic prefix (CP). This CP is chosen larger than the delay spread introduced by the time dispersive channel to overcome ISI effects. This guard time is just the cyclically extended part of an OFDM symbol and the resultant OFDM symbol will become [3]:

$$\mathrm{s_g(n)} = \begin{cases} \mathrm{s(N+n)}, & \mathrm{n} = -\mathrm{N_g}, -\mathrm{N_g}+1, \ldots. -1 \\ \mathrm{s(n)}, & \mathrm{n} = 0,1,2, \ldots\ldots \mathrm{N}-1 \end{cases} \tag{3.11}$$

where $\mathrm{N_g}$ is the length of the guard interval. In single carrier systems, we used channel without memory which consists of only one tap. For OFDM systems, we consider a channel with memory which consists of L number of taps. Transmitted signal $\mathrm{s_g(n)}$ is

passed through the frequency-selective fading channel $h(\tau)$ with additive white Gaussian noise environment. Channel impulse response can be represented as [5]:

$$h(\tau) = \sum_{k=0}^{M-1} a_k e^{-j\theta_k}\, \delta(\tau - \tau_k) \tag{3.12}$$

here a_k, θ_k and τ_k are the propagation path's amplitudes, phases and delays, respectively, and τ_k is the path delay of path k. M is the total number of propagation paths. For simplicity, channel consists of L number of taps will be represented as $h(L)$ from now on. Change of phase in channel taps vary slightly and that variation is considered as linear. CP insertion makes OFDM symbols periodic and linear convolution with channel turns into cyclic convolution, which in frequency domain is just multiplication of input signal with channel frequency response.

The received signal is given by:

$$y_g(n) = s_g(n) \otimes h(n) + w(n) \tag{3.13}$$

where $\otimes$ denotes convolution, $w(n)$ is the additive white Gaussian noise and $h(n)$ is the channel impulse response. At the receiving end, guard interval is first removed as it doesn't contain any information.

$$y(n) = y_g\big(n + N_g\big), \quad n = 0,1,2, \dots, \quad N - 1 \tag{3.14}$$

After removing CP, $y(n)$ is sent to the DFT block to convert the time domain signal into frequency domain signal.

$$Y(K) = DFT\{y(n)\}, \qquad K = 0,1,2, \dots, \qquad N - 1$$

$$= \sum_{n=0}^{N-1} y(n) e^{-j2\pi \frac{Kn}{N}} \tag{3.15}$$

If there is no ISI then the frequency domain representation of equation (3.13) without guard interval will become:

$$\mathrm{Y(K) = S(K)H(K) + W(K)} \tag{3.16}$$

where $W(K)$, $H(K)$ and $S(K)$ denote additive white Gaussian noise (AWGN), channel transfer function and transmitted data, respectively, in the frequency domain. It can be seen that (3.16) is similar to (3.1). Channel memory has been considered in (3.16), whereas in single carrier systems, channel is consists of only one tap. If the channel transfer function doesn't vary significantly from one tap to the next one, we can also use differential modulation in OFDM systems.

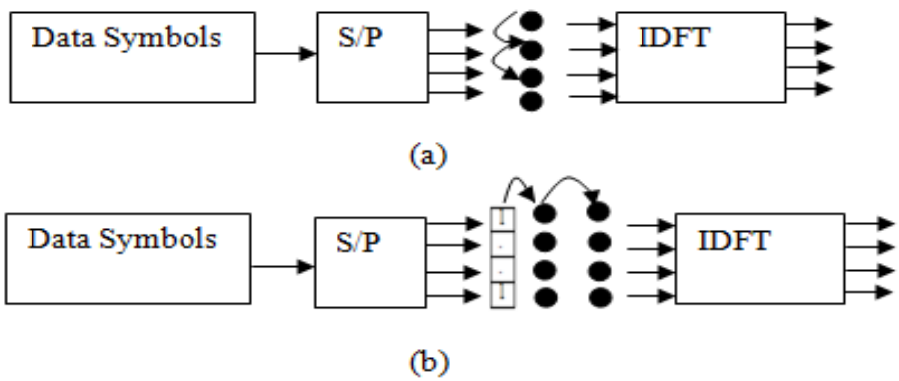

Fig. 3.7 (a) In-frame modulation (b) Inter-frame modulation

Here, differential detection is used in OFDM systems as an alternative to channel estimation and equalization. Differential detection is applied after DFT block to get the transmitted symbols $\hat{Z}(K)$ directly from output symbols $Y(K)$ without any channel

information. Differentially detected output data can be used for channel estimation. Once we have our estimated channel, we can use it in coherent data detection to improve the system performance. As differential detection works based on the phase difference between the output symbols, a small phase variation between the channel taps can be compensated using this detection technique. We are using differential encoding and decoding in this chapter to combat any small linear phase variation in channel transfer function.

3.5 Channel Estimation

In coherent detection, arbitrary signal constellation is chosen in signal mapper and channel estimation is not required for demodulation at the receiving end. But for incoherent detection, performance is not so high in comparison to coherent detection and hence channel estimation is required sometimes to improve the system performance. Two problems may arise at the time of channel estimation. Lot of attention is needed for the proper arrangement of pilot information in an OFDM symbol and the designed estimator should have low complexity and good channel tracking ability. Otherwise, designing the channel estimator will not be as worthy as expected. Two dimensional channel estimator has been developed based on the concept that the fading channel of OFDM systems is a two dimensional signal. This type of estimator is too complex to implement practically. Estimators that have low complexity but high accuracy are always expected for high data rates and low error rates. To accomplish this need, one dimensional estimator has been proposed [8]-[10], [25], [29]. Two common one dimensional channel estimator are block

type and comb type pilot channel estimation. In block type pilot arrangement, estimators are implemented based on least-square (LS), minimum-mean square error (MMSE) and modified MMSE techniques. In comb type arrangement, least-square with interpolation, maximum likelihood and parametric channel modeling estimators are used [7].

By exploiting the information in CP, blind channel estimation was developed [13]. Subspace based blind channel estimator using virtual carriers had also been derived in [27]. Multipath channel parameters can be fluctuated due to the mobility of users, and hence the subspace based blind channel estimators which need several OFDM symbols to identify the channel may not be practical to implement.

3.5.1 Channel Estimation Using In-frame Differential Modulation

Channel estimation using in-frame and inter-frame differential modulation and their performance comparison is quite rare in literature. In this section, we use in-frame differential modulation for channel estimation. In the next section, we will discuss about inter-frame differential modulation for channel estimation with a new technique, where we perform channel estimation using less than one OFDM symbol. For in-frame modulation, we use both single differential and double differential detection. It has been observed that double differential detection gives better performance to compensate the phase variation in the channel transfer function, which motivated us to use double differential modulation for channel estimation.

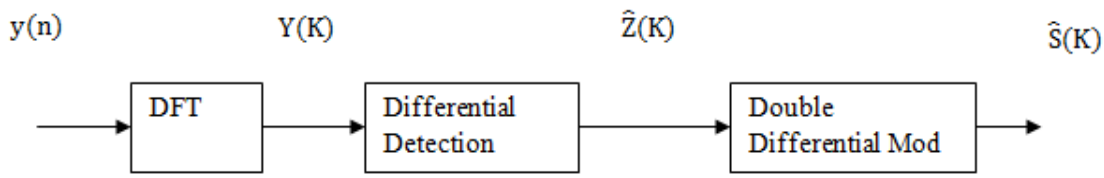

Fig. 3.8 Double differential modulated signal

It has been shown in Fig. 3.6 that differentially modulated signal S(K) is converted into time domain signal before transmission through channel h(L). If we choose guard interval to be greater than the maximum delay spread, there will be no leakage between OFDM symbols. Equation (3.16) can be written here in a convenient way:

$$\mathrm{Y} = \mathrm{XF}\bar{\mathrm{h}} + \mathrm{W} \tag{3.17}$$

where X is a diagonal matrix with the elements of $\hat{S}(K)$ on its diagonal. Double differential modulation of estimated output $\hat{\mathrm{Z}}(\mathrm{K})$ will give us $\hat{\mathrm{S}}(\mathrm{K})$.

$$\bar{\mathrm{h}} = [\mathrm{h}(0) \ldots\ldots\ldots\ldots\ldots\ldots\ldots \mathrm{h}(\mathrm{L}-1)]^{\mathrm{T}}$$

$$\mathrm{X} = \mathrm{diag}\big(\hat{\mathrm{S}}(0) \ldots\ldots\ldots\ldots\ldots\ldots\ldots\ldots\ \hat{\mathrm{S}}(\mathrm{N}-1)\big)$$

$$\mathrm{Y} = [\mathrm{Y}(0)\mathrm{Y}(1) \ldots\ldots\ldots\ldots\ldots\ldots \mathrm{Y}(\mathrm{N}-1)]^{\mathrm{T}}$$

$$\mathrm{W} = [\mathrm{W}(0)\mathrm{W}(1) \ldots\ldots\ldots\ldots\ldots\ldots \mathrm{W}(\mathrm{N}-1)]^{\mathrm{T}}$$

$$\mathrm{H} = [\mathrm{H}(0)\mathrm{H}(1) \ldots\ldots\ldots\ldots\ldots\ldots \mathrm{H}(\mathrm{N}-1)]^{\mathrm{T}} \tag{3.18}$$

$$= \mathrm{DFT}\{\bar{\mathrm{h}}\}$$

$$F = \frac{1}{\sqrt{N}} \begin{bmatrix} 1 & 1 & 1 & \dots & 1 \\ 1 & W_N & W_N^2 & \dots & W_N^{L-1} \\ 1 & W_N^2 & W_N^4 & \dots & W_N^{2(L-1)} \\ \vdots & \vdots & \vdots & \dots & \vdots \\ 1 & W_N^{N-1} & W_N^{2(N-1)} & \dots & W_N^{(N-1)(L-1)} \end{bmatrix}$$

and $\quad \mathrm{W_N^{nK}} = \mathrm{e}^{-\mathrm{j}2\pi\frac{\mathrm{nK}}{\mathrm{N}}}, \begin{cases} \mathrm{n} = 0,1,\dots,\mathrm{N}-1 \\ \mathrm{K} = 0,1,\dots,\mathrm{L}-1 \end{cases}$ (3.19)

If we use Least square (LS) technique, we get:

$$\mathrm{H_{LS}} = \mathrm{X^{-1}Y} \tag{3.20}$$

Equation (3.20) minimizes $\left(Y - XF\bar{h}\right)^H \left(Y - XF\bar{h}\right)$.

Channel coefficients can be obtained by:

$$\hat{\bar{\mathrm{h}}} = \mathrm{F^H H_{LS}} \tag{3.21}$$

Using (3.21) the Fourier coefficients of the estimated channel $\widehat{H}$ can be obtained as

$$\widehat{\mathrm{H}} = \mathrm{FF^H H_{LS}} \tag{3.22}$$

Note that $F(F^H F)^{-1} F^H$ is an orthogonal projection into column space of F.

As $F^H F = I$, we have $F(F^H F)^{-1} F^H = FF^H$. Therefore, FF^H is an orthogonal projection into the column space of F. Thus, (3.22) simply projects the least-squares Fourier coefficients of the channel into the L-dimensional subspace of Fourier coefficients of channels that have length L. As we will discuss, it turns out that in the case of in-frame OFDM detection the bit error rates of the incoherent detection will have a high error floor. This is because bit errors occur near the channel nulls. However, the orthogonal projection of the least-square results gives a more accurate estimation of the channel

coefficients. If the channel frequency components of higher values can be estimated accurately, then the L-dimensional projection will give more accurate channel coefficients. Using these channel coefficients, much more accurate results can be obtained by coherent detection of in-frame differential detection in high SNRs. Estimated channel can be used for coherent detection in the following way:

$$\hat{X} = \frac{Y}{\hat{H}} \tag{3.23}$$

Data obtained using (3.23) are mapped with QPSK constellation to get the original input signals.

3.5.2 Channel Estimation Using Inter-frame Modulation

In this section, we discuss about inter-frame differential modulation, where data symbols are encoded in the relative phase of consecutive OFDM symbols in each sub-channel. Here, differential modulation is applied in time direction. Fig. 3.9 shows an OFDM system with inter-frame differential modulation.

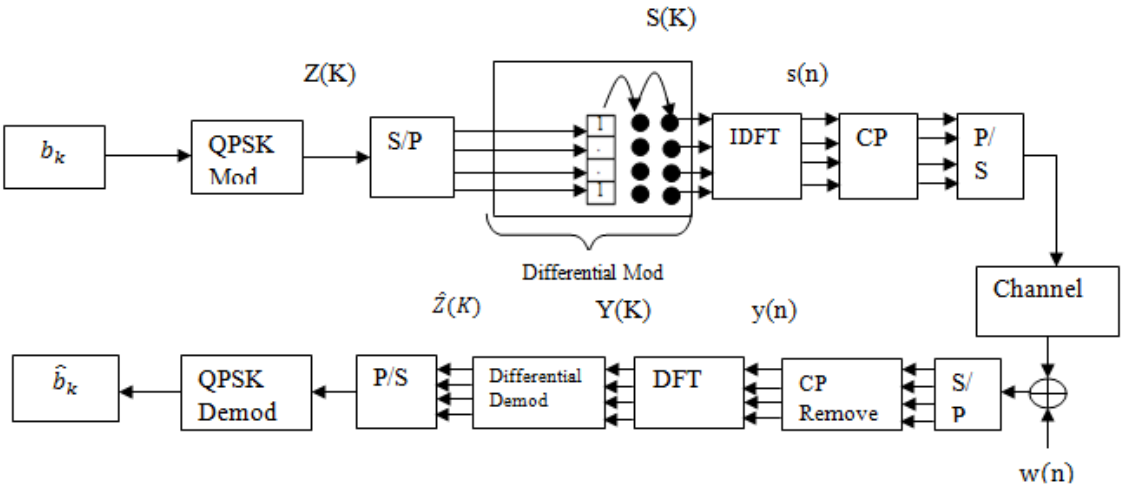

Fig. 3.9 An OFDM system with inter-frame differential modulation

First OFDM symbol doesn't contain any information but only pilot tones. In the remaining OFDM symbols, no other pilot insertion is required. Each of the subcarriers is used for data modulation and hence increases the transmission efficiency. Working principle of inter-frame differential OFDM systems is same as in-frame differential OFDM systems. Equation (3.17) to (3.21) can be used as before for channel estimation. As the first OFDM symbol contains only reference tones, channel estimation at the

receiving end using first symbol is supposed to give more accurate results. In the case of other OFDM symbols, estimation error will be somewhat higher at low SNRs.

To increase the efficiency and fast channel estimation, half of the data of an OFDM symbol can be utilized. By discarding the low energy data from an OFDM symbol, data symbols of higher energy will be taken for channel estimation. We define Y_{ml} vector which contains m higher energy data symbols of l-th received block. Equation (3.17) can be written here in the following way:

$$Y_{ml} = X_{ml}H_{ml} + W_{ml} \tag{3.24}$$

where X_{ml} is a diagonal matrix with the elements of D_{ml} on its diagonal. Differential modulation of $\hat{Z}(K)$ corresponding to Y_{ml} will give us D_{ml}.

$$Y_{ml} = \left[Y_{0l}\ Y_{1l} \dots\dots\dots\dots\dots\dots\ Y_{(m-1)l}\right]^T$$

$$X_{ml} = diag\{D_{ml}\}$$

$$D_{ml} = \left[D_{0l}\ D_{1l} \dots\dots\dots\dots\dots\dots\ D_{(m-1)l}\right]^T$$

$$H_{ml} = \left[H_{0l}\ H_{1l} \dots\dots\dots\dots\dots\dots\ H_{(m-1)l}\right]^T$$

$$W_{ml} = \left[W_{0l}\ W_{1l} \dots\dots\dots\dots\dots\dots\ W_{(m-1)l}\right]^T$$

If we apply least-squares approach we get:

$$H_{ml} = {X_{ml}}^{-1}Y_{ml} \tag{3.25}$$

Here, H_{ml} represents the frequency components of channel transfer function corresponding to m higher energy data symbols. H_{ml} can be represented in the following way:

$$\begin{bmatrix} H_{01} \\ H_{1l} \\ \vdots \\ H_{(m-1)l} \end{bmatrix} = \underbrace{\frac{1}{\sqrt{N}} \begin{bmatrix} 1 & 1 & 1 & \dots & 1 \\ 1 & W_N & W_N^2 & \dots & W_N^{L-1} \\ \vdots & \vdots & \vdots & \vdots & \vdots \\ 1 & W_N^{m-1} & W_N^{2(m-1)} & \dots & W_N^{(m-1)(L-1)} \end{bmatrix}}_{F_L} \begin{bmatrix} h(0) \\ \vdots \\ \vdots \\ h(L-1) \end{bmatrix} \Bigg\} \text{Channel taps} \tag{3.26}$$

where $\mathrm{W_N^{nK}} = \mathrm{e}^{-\mathrm{j}2\pi\frac{\mathrm{nK}}{\mathrm{N}}}, \begin{cases} \mathrm{n} = 0,1,\dots,\mathrm{m}-1 \\ \mathrm{K} = 0,1,\dots,\mathrm{L}-1 \end{cases}$

If we represent the DFT matrix by F_L, from (3.26) we get:

$$H_{ml} = F_L \hat{\hat{h}} \tag{3.27}$$

here, $$H_{ml} = \left[H_{01}\ H_{1l}\ \dots\dots\dots\dots\dots\dots\dots\dots\ H_{(m-1)l}\right]^T$$

$$\hat{\hat{h}} = [h(0)h(1)\dots\dots\dots\dots\dots\dots\dots h(L-1)]^T$$

Applying Least squares (LS) technique in (3.27) we have,

$$\hat{\hat{h}} = (F_L^T F_L)^{-1} F_L^T H_{ml} \tag{3.28}$$

Equation (3.28) will give us channel coefficients in time domain. Using this technique, only half of an OFDM symbol is enough to estimate the channel coefficients. We further investigate channel estimation error by increasing the number of higher energy data. Simulation results are shown in the next chapter.

3.6 Chapter Summary

In this chapter, differential OFDM systems have been described. At first, we apply differential modulation in single carrier systems, where channel without memory has been used. Later, we show the block diagram for a differential OFDM system, where we use channel with memory. The block diagram for differential encoder and decoder are shown and their working principles are then discussed. We also discuss about channel estimation in this chapter. At the last part of this chapter, we show a new technique for channel estimation, where data symbols of higher energy are used from an OFDM symbol.

CHAPTER 4
SIMULATION RESULTS AND DISCUSSION

4.1 Simulation Parameters

We assume to have perfect synchronization since the aim is to observe estimated output data and channel coefficients. We have chosen the guard interval to be greater than the maximum delay spread in order to avoid inter-symbol interference. Simulations are carried out for different signal to noise ratios and channels. Instead of using pilot tones in every OFDM symbols, we have used only one in single differential and two in double differential in-frame modulation. This will not only make the process faster but also increase the transmission efficiency. In the case of inter-frame single differential modulation, we use one complete OFDM symbol for pilot insertion. OFDM system parameters used in the simulation are given in Table 4.1. Randomly generated channels have been used in simulation.

Table 4.1 Simulation Parameters

FFT Size	32,64
Number of active carriers	32,64
Guard Interval	10
Guard Type	Cyclic Extension
Signal Constellation	QPSK
Channel Model	Frequency-selective Fading Channel
Channel Length	3-8

4.2 Results and Discussion

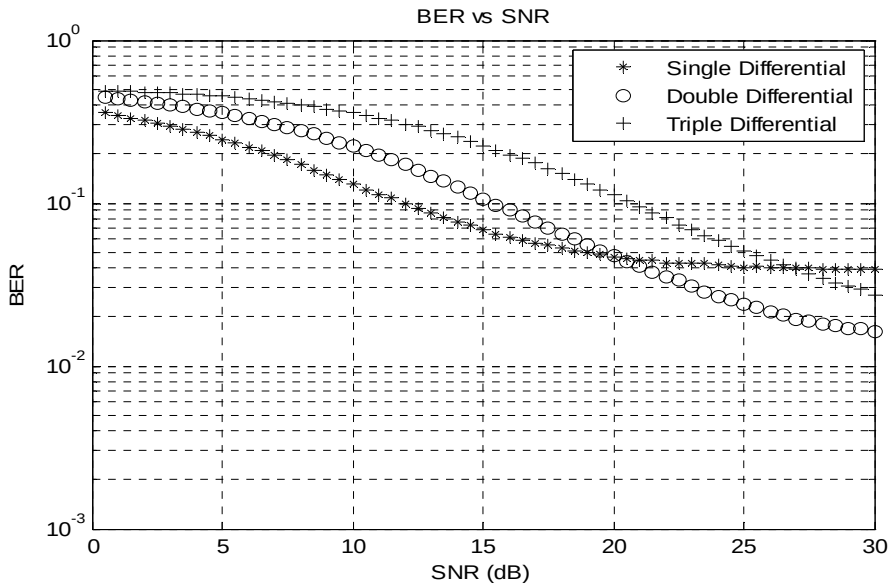

4.1 (a)

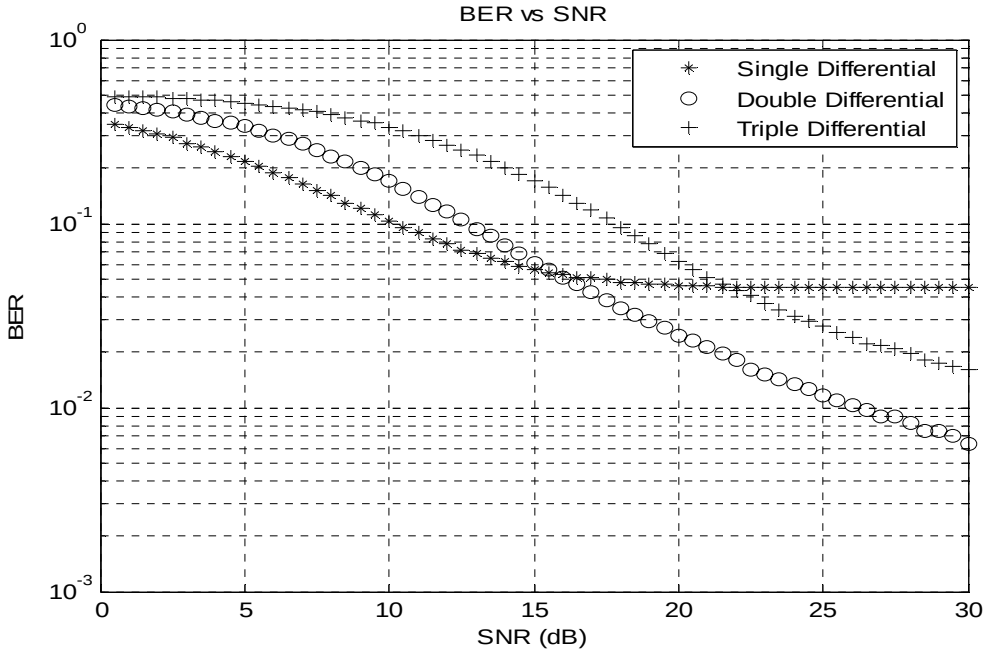

4.1 (b)

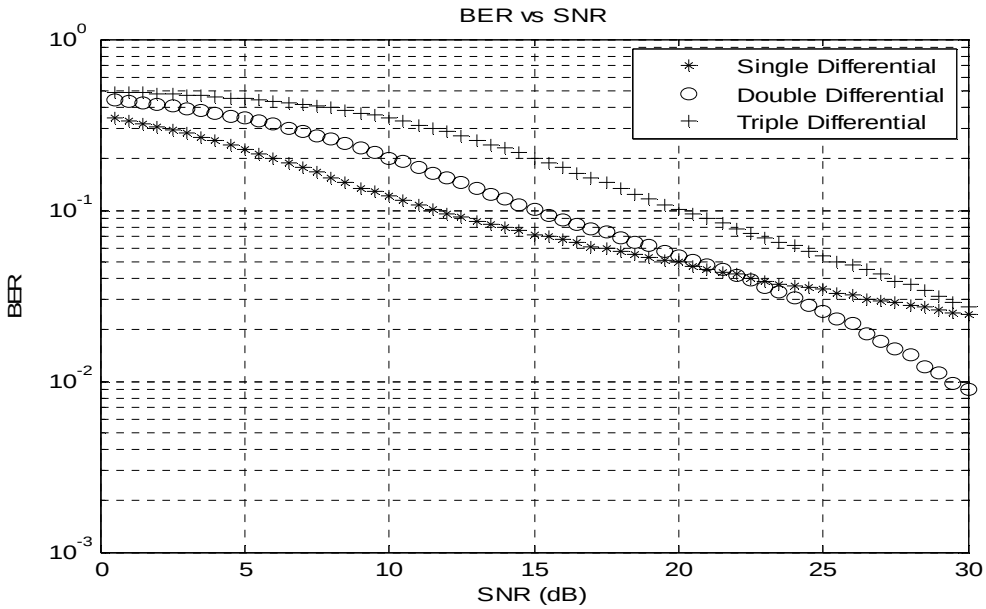

4.1 (c)

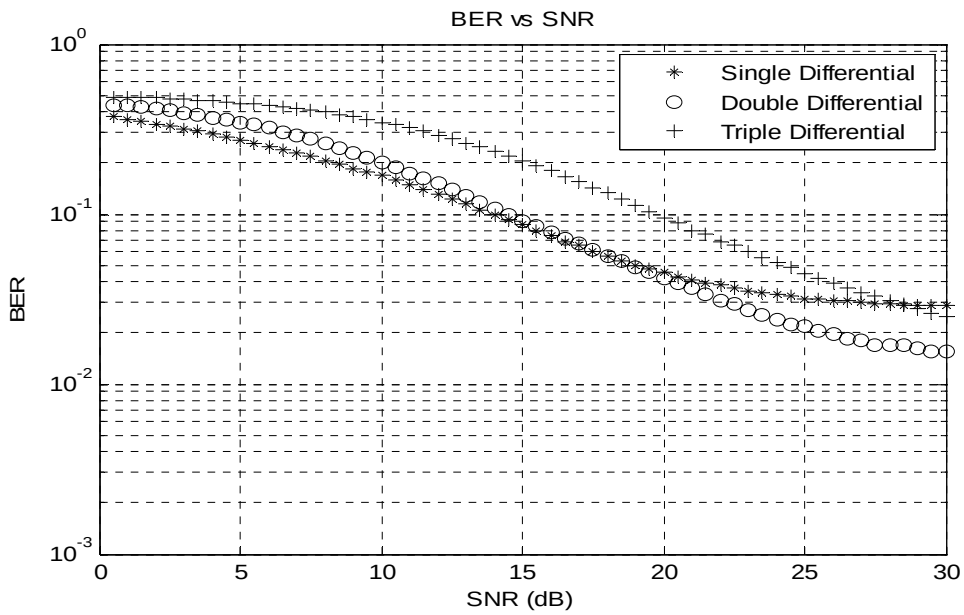

4.1 (d)

Fig. 4.1 BER performance of single, double and triple differential in-frame incoherent modulation (a)-(d)

Fig. 4.1 shows some of the simulation results for the BER (Bit Error Rate) performance using in-frame differential modulation. The frequency-selective fading channels that we use in our simulation for Fig. 4.1 are as follows:

For Fig.4.1(a): $\bar{\mathrm{h}} = [-0.0623 + 0.2275\mathrm{i}, 0.1920 - 1.0316\mathrm{i}, -1.0060 + 0.0836\mathrm{i}, 0.2936 + 0.4461\mathrm{i}, -0.6941 - 0.4429\mathrm{i}]^{\mathrm{T}}$

For Fig.4.1(b): $\bar{\mathrm{h}} = [-1.3358 + 0.1459\mathrm{i}, 0.7823 + 0.0047\mathrm{i}, -0.0942 + 0.7333\mathrm{i}, -0.0642 + 0.3868\mathrm{i}, -0.6438 - 1.2036\mathrm{i}, -0.2797 - 1.3087\mathrm{i}]^{\mathrm{T}}$

For Fig.4.1(c): $\bar{\mathrm{h}} = [0.3894 + 0.8719\mathrm{i}, -0.6211 + 0.0146\mathrm{i}, -0.8689 - 0.8255\mathrm{i}, 0.0276 - 0.1389\mathrm{i}, 0.0567 - 0.5119\mathrm{i}, 0.3299 - 0.0317\mathrm{i}, 0.2158 - 0.1230\mathrm{i}]^{\mathrm{T}}$

For Fig.4.1(d): $\bar{\mathrm{h}} = [-0.1246 + 0.2355\mathrm{i}, 0.7443 + 0.2478\mathrm{i}, 0.2797 + 0.3432\mathrm{i}, 0.8059 + 0.5616\mathrm{i}, 0.6410 - 0.2533\mathrm{i}, 0.6929 - 1.2859\mathrm{i}, -0.4392 + 0.2669\mathrm{i}, -0.7101 + 0.2423\mathrm{i}]^{\mathrm{T}}$

Simulation results show that at low SNRs, if we have only a few channel taps $(L < 5)$ single differential modulation performs better than double differential modulation. But only 3 dB better results can be achieved using single differential modulation when the SNR is below 15 dB or so. Results show that double differential works better in high SNRs or when we have higher number of channel taps. We also investigate the bit error performance with higher order in-frame differential modulation. It has been observed that higher order differential schemes don't have any further advantage in this respect.

A small linear phase variation has been considered in the channel taps. Phase distortions also likely to present in the received signal due to the fading effects and multipath propagation. Simulation results show that double differential works better for the phase offset compensation at higher SNRs with higher number of channel taps. Although single differential modulation can compensate phase offset at low SNRs and

low channel taps, it is not as robust as double differential with higher number of channel taps.

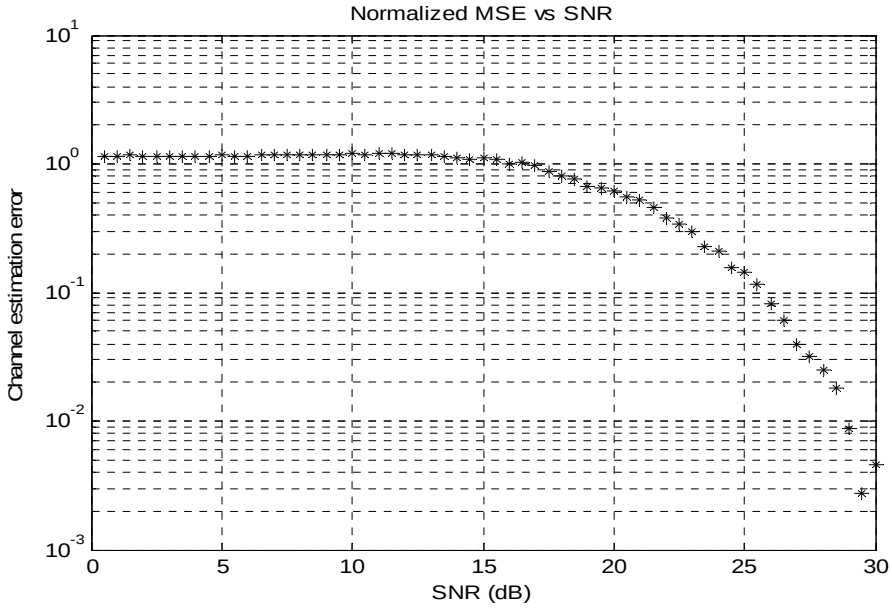

4.2 (a)

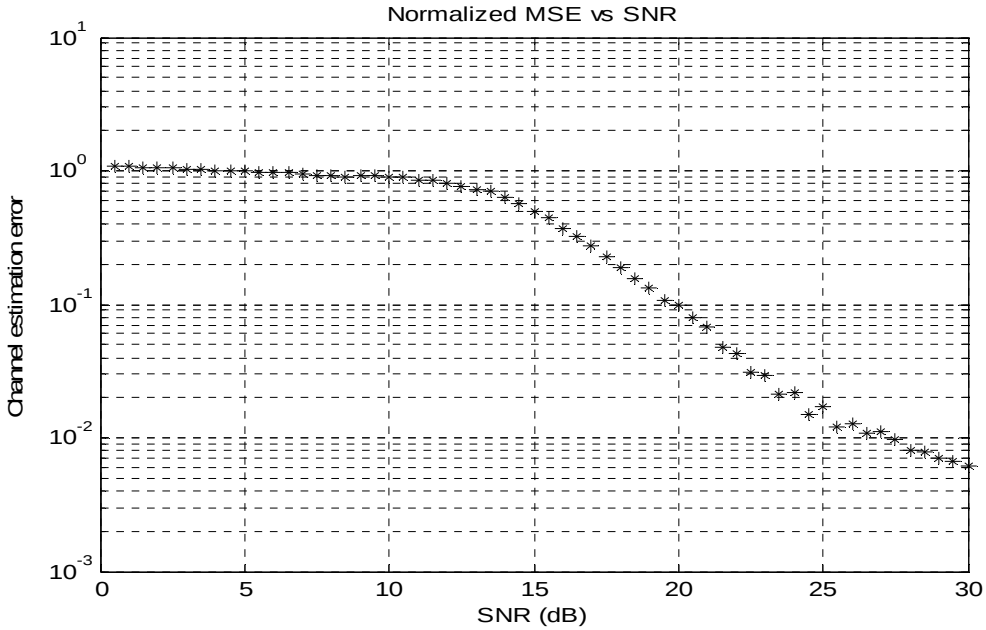

4.2 (b)

Fig. 4.2 Channel estimation error using double differential in-frame modulation (a)-(b)

In Fig. 4.2, simulated error has been plotted against SNR for estimated channel coefficients using double differential in-frame modulation. We use two different channels for our simulation and the channel coefficients are as follows:

For Fig. 4.2 (a): $\bar{\mathrm{h}} = [-0.0263 - 0.9526\mathrm{i}, 0.0681 + 0.1540\mathrm{i}, 0.2958 - 0.2459\mathrm{i}, 0.1963 + 0.4802\mathrm{i}, -0.6056 + 0.1785\mathrm{i}]^{\mathrm{T}}$

For Fig. 4.2 (b): $\bar{\mathrm{h}} = [0.8006 + 0.2532\mathrm{i}, -0.4275 + 0.1074\mathrm{i}, 0.7687 - 0.0105\mathrm{i}, 1.3151 + 0.2758\mathrm{i}, -1.1154 + 0.7144\mathrm{i}, 0.4749 + 1.2368\mathrm{i}]^{\mathrm{T}}$

For each SNR value, we performed the simulation at least 500 times and find the average normalized error, i.e., $\frac{|\hat{\bar{h}} - \bar{h}|}{|\bar{h}|}$. We observed that at around 30 dB SNR, the normalized mean square channel estimation error is about 10^{-2} for double differential in-frame modulation. Channels estimated at higher SNRs can be used for coherent detection to improve system performance, which we will discuss later in this chapter.

In inter-frame differential modulation, relative phase of consecutive OFDM symbols is used for data encoding. The first OFDM symbol is used for pilot tones insertion and all other OFDM symbols are modulated with respect to first symbol. No extra overhead is used in other OFDM symbols. We assume that the channel taps remain constant at least for two OFDM symbols in inter-frame single differential modulation. For the data detection using single differential inter-frame modulation, we use following channels in our simulations:

For Fig. 4.3 (a): $\bar{\mathrm{h}} = [0.2389 + 0.6603\mathrm{i}, -0.7571 + 0.4853\mathrm{i}, 0.4821 - 0.5896\mathrm{i}, -1.0678 - 0.6667\mathrm{i}, 0.4598 - 0.3077\mathrm{i}, 0.7119 + 0.3903\mathrm{i}, 0.4217 + 0.5543\mathrm{i}]^{\mathrm{T}}$

For Fig. 4.3 (b): $\bar{\mathrm{h}} = [-0.6912 + 0.8657\mathrm{i}, -0.7409 + 0.1601\mathrm{i}, 0.0108 + 0.1487\mathrm{i}, 0.3559 + 0.1576\mathrm{i}, -0.2219 - 0.7555\mathrm{i}, 1.0229 + 0.3273\mathrm{i}]^{\mathrm{T}}$

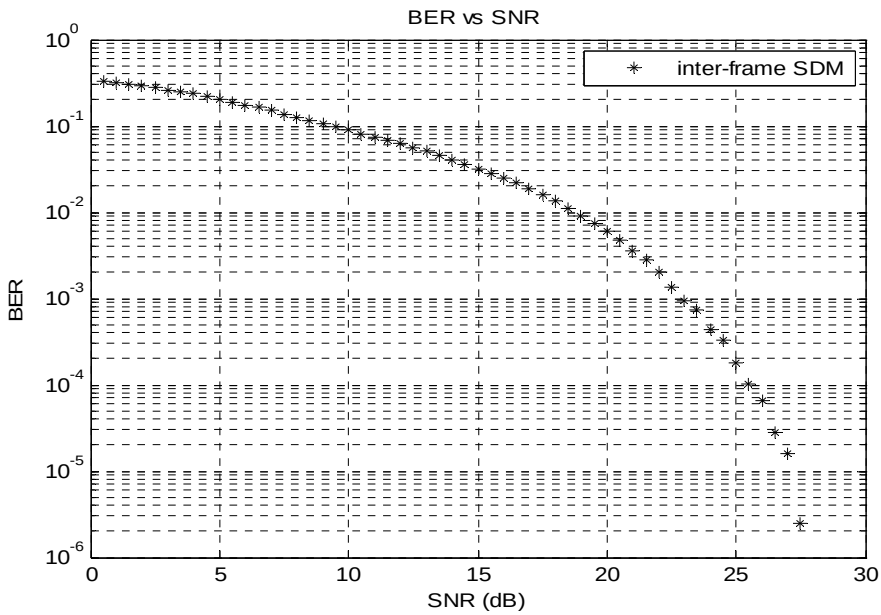

4.3 (a)

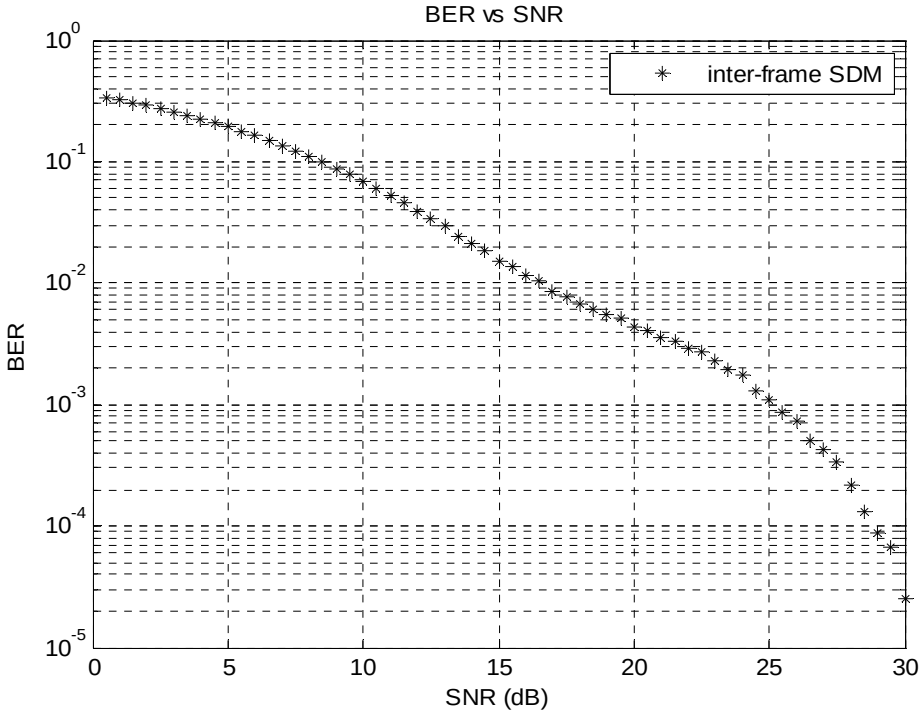

4.3 (b)

Fig. 4.3 BER performance for inter-frame single differential modulation (SDM) (a)-(b)

Fig. 4.3 shows the bit error performance of inter-frame single differential incoherent modulation for OFDM systems. We also compare BER performance between in-frame and inter-frame single differential modulation in Fig. 4.4. It indicates that the inter-frame differential is much better than in-frame differential modulation. This happens as the relative phase of data symbols in adjacent sub-channels is used for encoding in the in-frame modulation. Phase difference for data symbols in adjacent sub-channel is more vulnerable in noisy environment in comparison to inter-frame modulation, where same sub-channel but different OFDM symbols are used for encoding. The fading channel coefficients that we use in Fig. 4.4 are as follows:

$$\bar{h} = [0.1831 - 0.5187i, 0.2082 - 0.4072i, 0.2966 - 0.6578i, 0.2729 + 0.4843i, 0.2223 - 0.1434i, -0.8446 - 0.9813i, -0.2622 + 0.2280i, -0.1561 + 1.1442i]^T$$

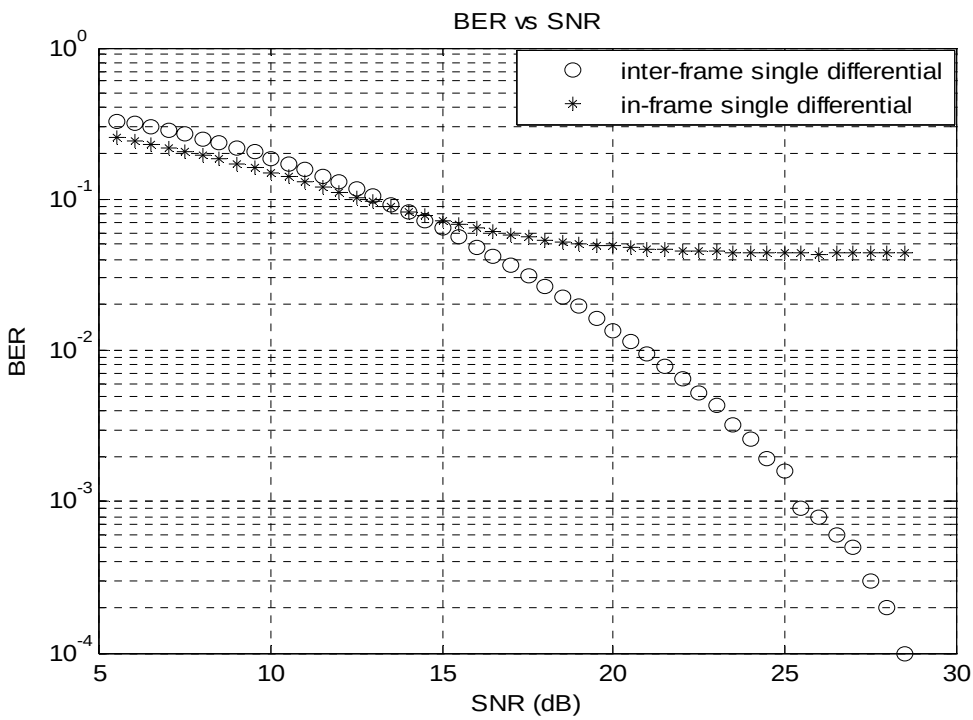

Fig. 4.4. BER performance comparison for inter-frame and in-frame single differential modulation

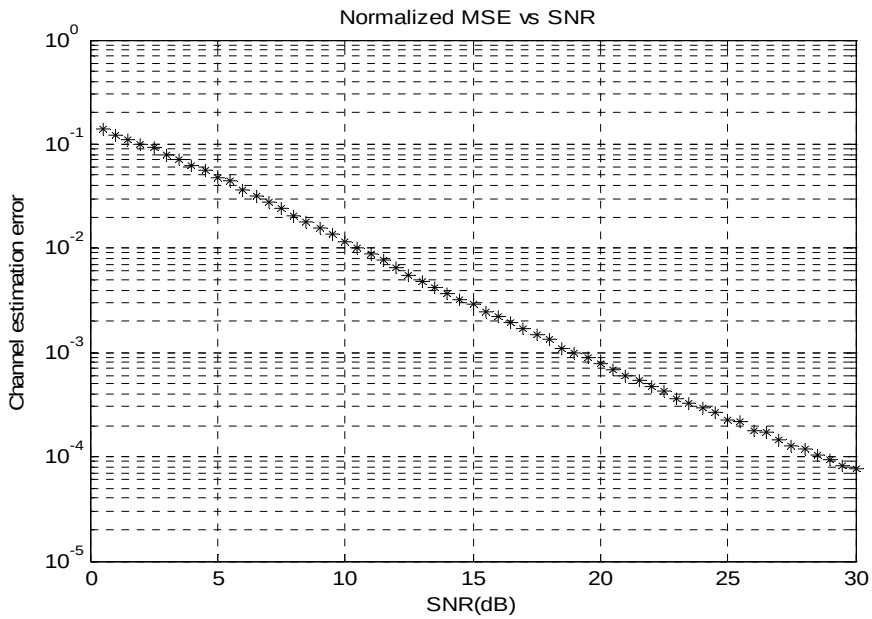

4.5 (a)

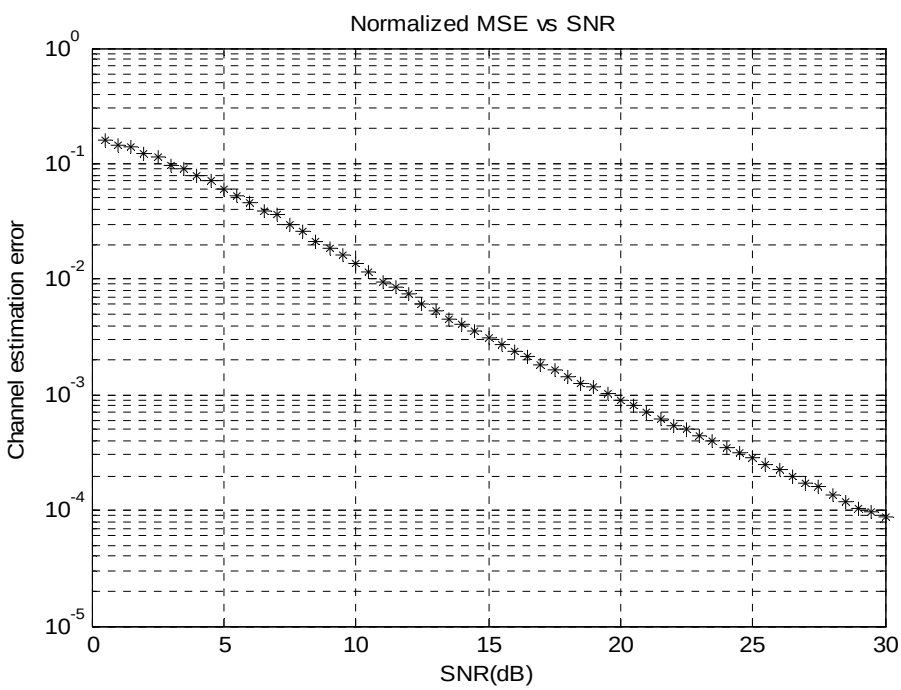

4.5 (b)

Fig. 4.5 Channel estimation using inter-frame single differential modulation (a)-(b)

We perform channel estimation using single differential inter-frame modulation and results are shown in Fig. 4.5 for two different channels. Channels that we use in Fig. 4.5 (a) and Fig. 4.5 (b) are as follows:

For Fig. 4.5 (a): $\bar{\mathrm{h}} = [-0.0263 - 0.9526\mathrm{i}, 0.0681 + 0.1540\mathrm{i}, 0.2958 - 0.2459\mathrm{i}, 0.1963 + 0.4802\mathrm{i}, -0.6056 + 0.1785\mathrm{i}]^{\mathrm{T}}$

For Fig. 4.5 (b): $\bar{\mathrm{h}} = [0.8006 + 0.2532\mathrm{i}, -0.4275 + 0.1074\mathrm{i}, 0.7687 - 0.0105\mathrm{i}, 1.3151 + 0.2758\mathrm{i}, -1.1154 + 0.7144\mathrm{i}, 0.4749 + 1.2368\mathrm{i}]^{\mathrm{T}}$

We compare the channel estimation error of in-frame double differential modulation to inter-frame single differential modulation for the above channels and the results are plotted in Fig. 4.6. We observed that at around 30 dB SNR, the normalized mean square error is about 10^{-4} for the single differential inter-frame modulation and 10^{-2} for the double differential in-frame modulation scheme.

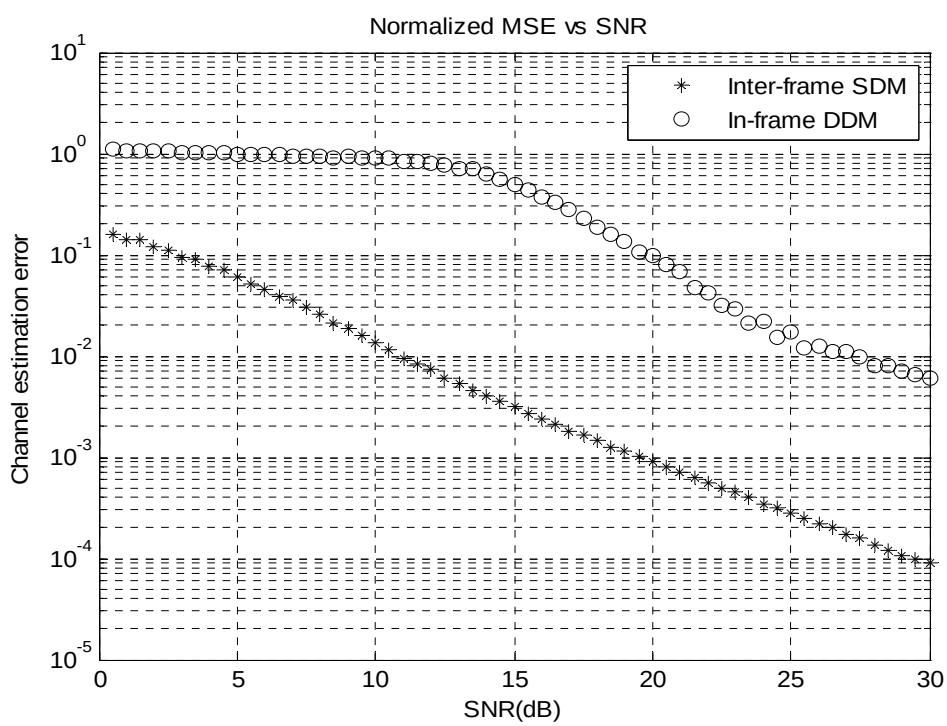

4.6 (a)

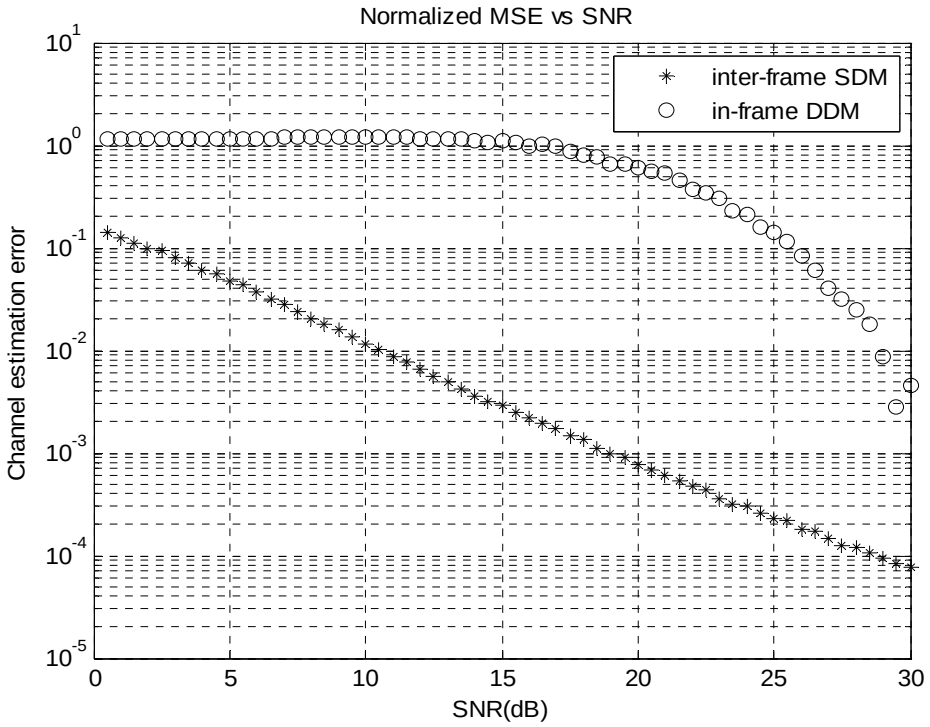

4.6 (b)

Fig. 4.6 Channel estimation error comparison for in-frame double differential modulation (DDM) and inter-frame single differential modulation (SDM)

To increase the efficiency and fast channel estimation, we use least squares based new technique by reducing data from an OFDM symbol. Data symbols of higher energy are taken from an OFDM symbol by ignoring lower energy data. At first, we use half of an OFDM symbol to estimate the channel and simulation result is shown in Fig. 4.7 for the following channel:

$$\bar{\mathrm{h}} = [0.2323 - 0.0433\mathrm{i}, 0.3140 + 1.2283\mathrm{i}, -0.2809 + 0.9589\mathrm{i}, 0.8079 + 0.0645\mathrm{i}, -0.0060 - 0.2129\mathrm{i}, 0.5772 + 0.4290\mathrm{i}, 0.2944 + 0.0528\mathrm{i}]^{\mathrm{T}}$$

Results show that channel estimation can be performed using only half of an OFDM symbol with slightly higher error in comparison to full OFDM symbol.

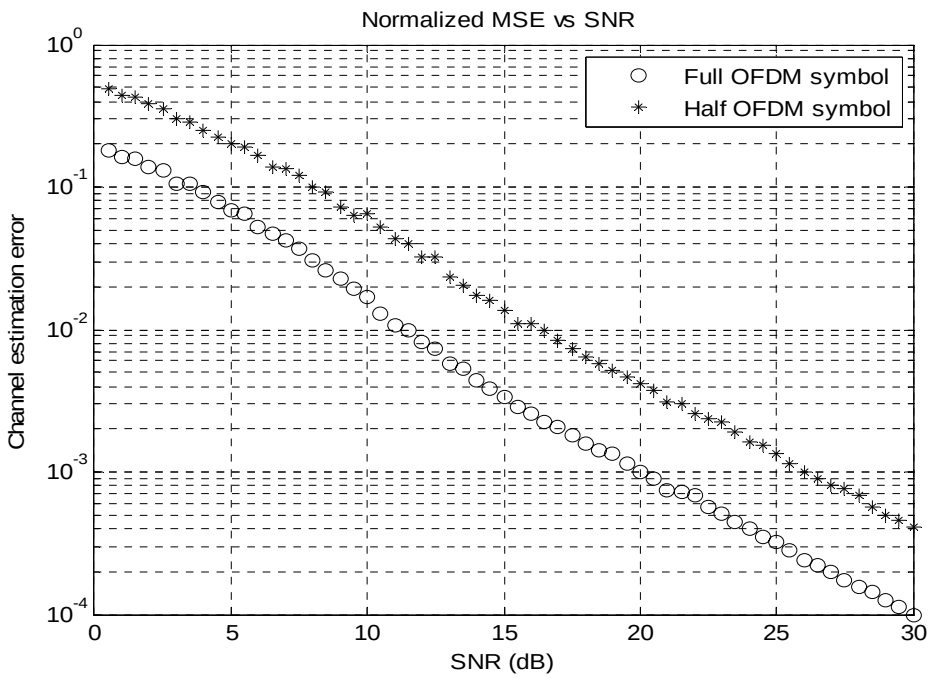

Fig. 4.7 Channel estimation error comparison using full and half OFDM symbol.

We also investigate channel estimation error by increasing the number of higher energy data from an OFDM symbol. Fig. 4.8 shows that the channel estimation error can be minimized by increasing the number of higher energy data. In our simulations, we try to find the amount of low energy data which doesn't have any contribution in channel estimation. It has been observed in simulation that 15% lower energy data can be reduced from an OFDM symbol without compromising error performance (see Fig. 4.9). Channel coefficients that we use in Fig. 4.8 and Fig. 4.9 are as follows:

For Fig. 4.8: $\bar{\mathrm{h}} = [0.1046 + 0.2180\mathrm{i}, 0.7058 - 0.4811\mathrm{i}, -0.6050 + 0.1448\mathrm{i}, 0.1301 + 0.1499\mathrm{i}, 0.7480 + 0.3631\mathrm{i}]^{\mathrm{T}}$

For Fig. 4.9: $\bar{\mathrm{h}} = [-0.1646 - 0.1167\mathrm{i}, -0.7312 + 0.3301\mathrm{i}, 0.3027 - 0.5092\mathrm{i}, 0.6183 + 0.2881\mathrm{i}, 0.2022 + 0.4121\mathrm{i}, 0.5644 + 0.3392\mathrm{i}, 0.6556 + 0.9390\mathrm{i}]^{\mathrm{T}}$

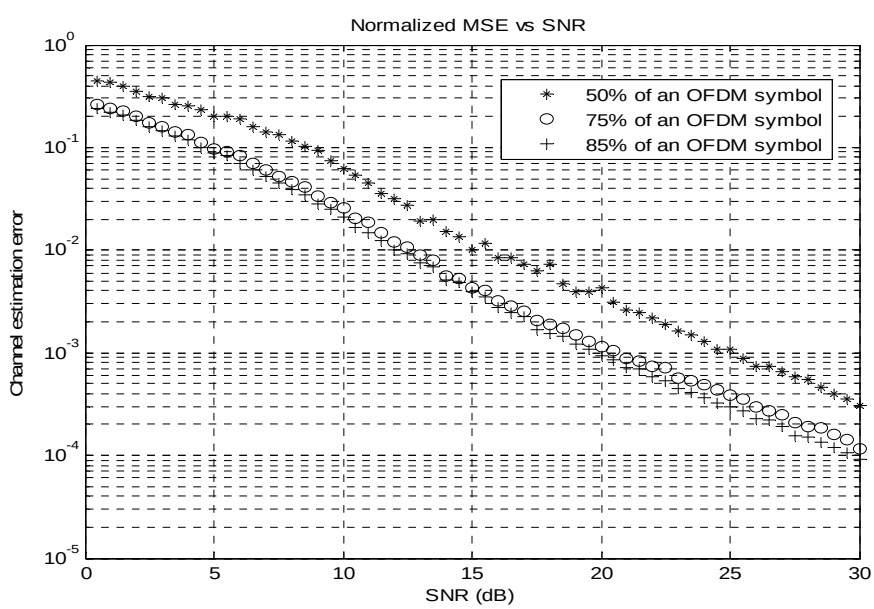

Fig. 4.8 Channel estimation by increasing the number of higher energy data

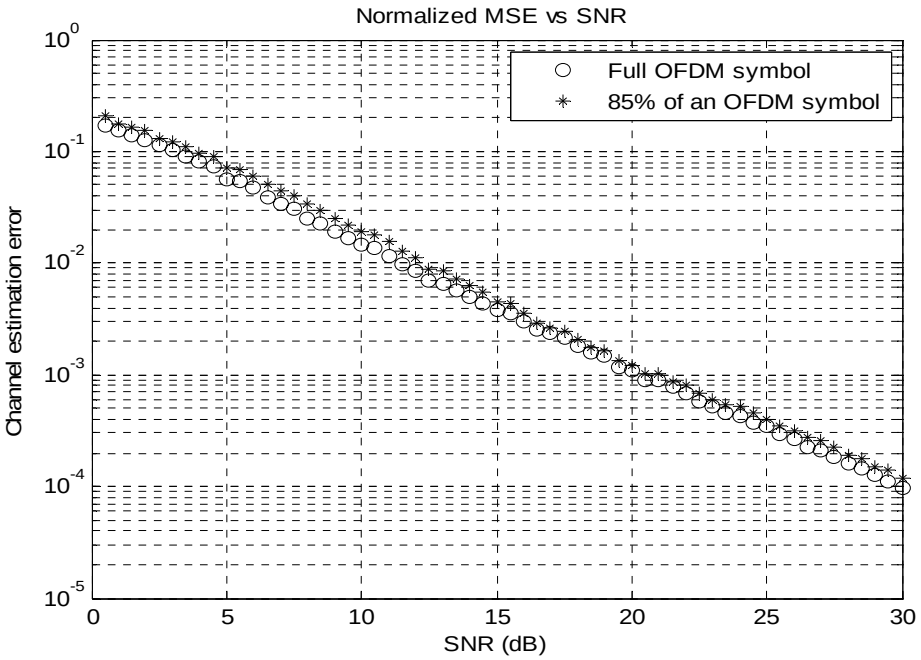

Fig. 4.9 channel estimation error using a full and 85% of an OFDM symbol

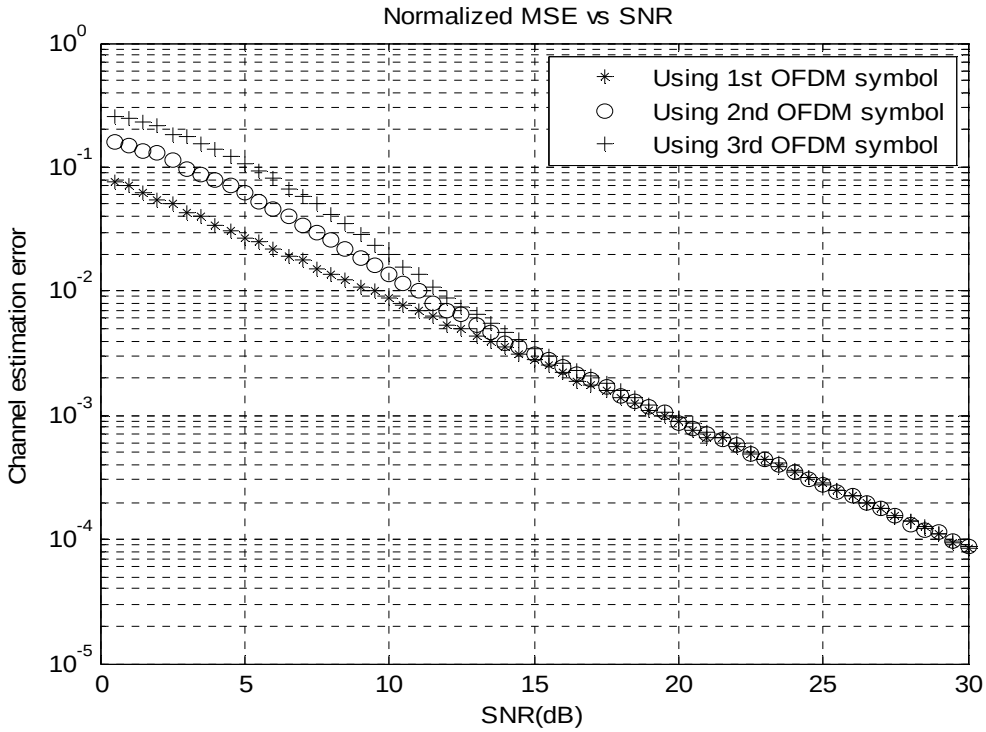

Fig. 4.10 Channel estimation using different OFDM symbols

In inter-frame differential modulation, first OFDM symbol is used for pilot insertion. Consecutive symbols are modulated with respect to the first symbol. At the receiving end, another reference symbol is used for demodulation purpose. As a result, channel estimation error using reference symbol will be less in comparison to any other symbol. Fig. 4.10 shows channel estimation error using different OFDM symbols where we use the following channel:

$$\bar{\mathrm{h}} = [0.8006 + 0.2532\mathrm{i}, -0.4275 + 0.1074\mathrm{i}, 0.7687 - 0.0105\mathrm{i}, 1.3151 + 0.2758\mathrm{i}, -1.1154 + 0.7144\mathrm{i}, 0.4749 + 1.2368\mathrm{i}]^{\mathrm{T}}$$

We observed that at higher SNRs, error doesn't vary with OFDM symbols; whereas at low SNRs, reference symbol gives the best performance.

4.3 Performance Improvement

One of the objectives of using differential modulation is to recover the SNR loss that happens in classical incoherent detection. It has already been mentioned that incoherent detection using classical DPSK may cause an SNR loss of approximately 3 dB compare to coherent detection. Here, we apply differential modulation and use iterative techniques which will minimize this SNR loss and improve BER performance.

Fourier coefficients of estimated channel taps can be projected into L-dimensional subspace. The orthogonal projection of least-squares results gives a more accurate estimation of the channel coefficients. Using these channel coefficients, much more accurate results can be obtained by coherent detection.

At first, we use inter-frame single differential detection for channel estimation to improve the BER performance with our estimated channel. Using single differential inter-frame modulation, channel coefficients can be estimated very accurately. We try to estimate channel at 30 dB SNR and use our estimated channel for coherent data detection. Fig. 4.11 shows the performance improvement with estimated channels. In the inter-frame scheme, simulation results show that the coherent detection provides an improvement of about 2dB over the incoherent detection. Channels that we use for the data detection in Fig. 4.11 are as follows:

For Fig. 4.11 (a): $\bar{\mathrm{h}} = [-0.2163 + 0.5946\mathrm{i}, -0.8328 - 0.0188\mathrm{i}, 0.0627 + 0.1636\mathrm{i}, 0.1438 + 0.0873\mathrm{i}, -0.5732 - 0.0934\mathrm{i}, 0.5955 + 0.3629\mathrm{i}]^{\mathrm{T}}$

For Fig. 4.11 (b): $\bar{\mathrm{h}} = [1.5058 + 0.5250\mathrm{i}, -0.1146 + 0.2522\mathrm{i}, 0.5495 - 0.0437\mathrm{i}, 0.1963 + 0.2051\mathrm{i}, -0.9264 - 0.2680\mathrm{i}, -0.2669 - 0.2341\mathrm{i}, -0.1067 - 0.3396\mathrm{i}]^{\mathrm{T}}$

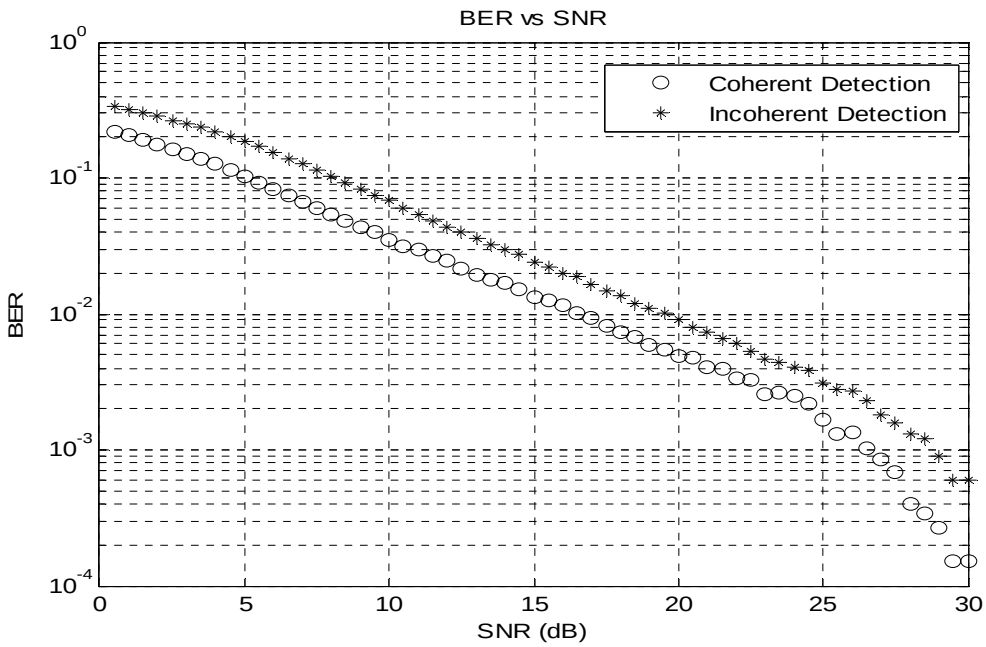

4.11 (a)

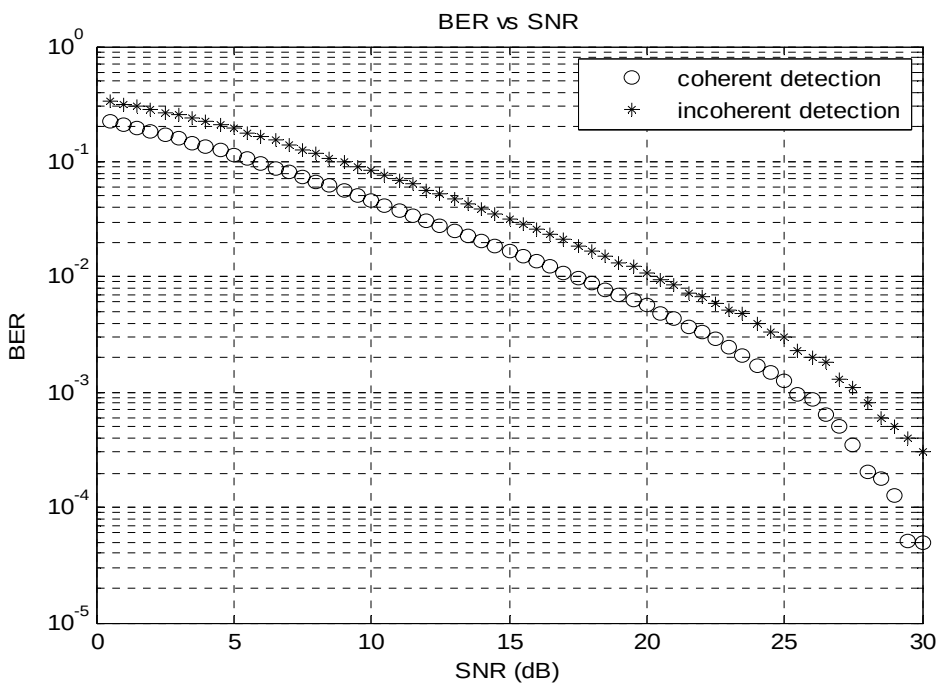

4.11 (b)

Fig. 4.11 BER comparison for inter-frame incoherent and coherent detection

In order to improve the BER performance of in-frame technique, we have used the results of the data detection to estimate the channel. It turns out that even though the BER is not good, a good estimate of the channel can be obtained, which in turn would result in improvement of data detection in the next iteration. This can be explained by the fact that bit errors occur near the channel nulls. In which case, channel frequency components of smaller values become erroneous. If we can estimate the frequency components of higher values accurately then the output becomes comparable to noise and bit errors improve. Simulation results show that the double differential in-frame scheme can estimate the channel coefficients very accurately in high SNRs, and thus the BER performance improvement is significant in high SNRs (see Fig. 4.12). The frequency-selective fading channel that we use in our simulation is as follows:

$$\bar{\mathrm{h}} = [-0.5074 - 0.6779\mathrm{i}, -0.4012 + 0.2537\mathrm{i}, 0.0419 + 0.8079\mathrm{i}, 0.2747 - 0.1493\mathrm{i}, 0.1988 + 0.5360\mathrm{i}, 0.2442 - 0.4546\mathrm{i}]^{\mathrm{T}}$$

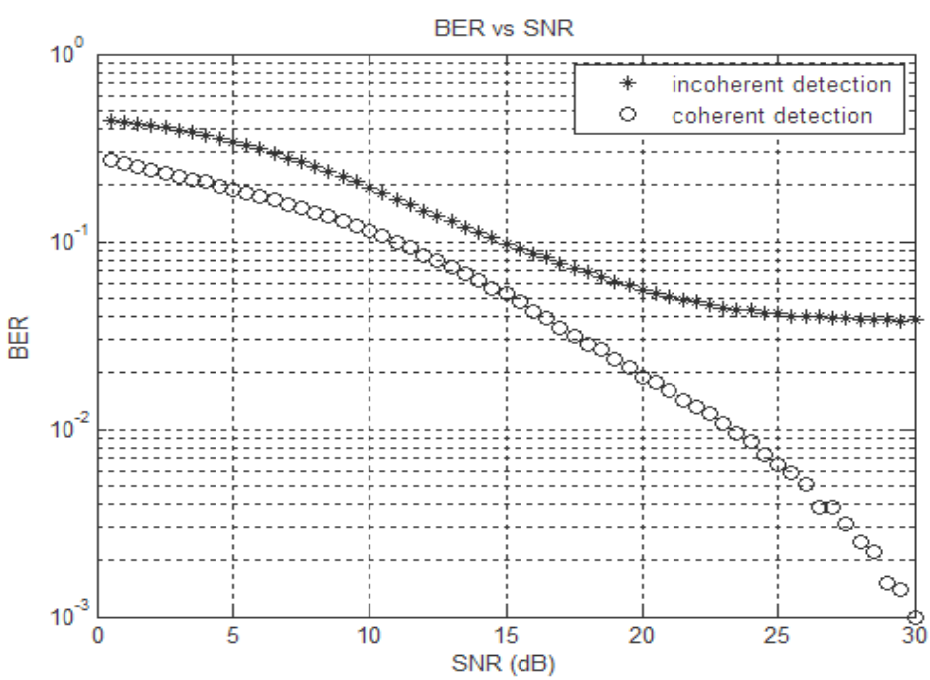

Fig. 4.12. BER comparison for in-frame incoherent and coherent detection

We also apply our estimated channel iteratively to improve the channel estimation accuracy. For the inter-frame modulation, higher number of iteration doesn't improve the performance significantly. On the other hand, a second iteration can improve the BER drastically for the in-frame coherent detection (see Fig. 4.13). The channel coefficients that we use in our simulations are as follows:

For Fig. 4.13: (a) $\bar{\mathrm{h}} = [0.6012 + 0.2617i, -0.1699 + 0.5306i, 0.1784 - 0.3511i, 0.0483 + 0.2479i, 0.4417 + 0.5183i, -0.0201 - 0.4087i, 0.6359 - 0.5712i]^T$

For Fig.4.13: (b) $\bar{\mathrm{h}} = [-0.6492 + 0.6951i, 0.7934 + 0.3726i, 1.3148 - 0.4253i, 0.3405 - 0.5206i, -0.4803 - 0.3624i, -0.1642 + 0.2674i, 0.0750 + 0.0499i]^T$

Based on our results, second iteration of in-frame coherent detection can achieve the same performance as inter-frame coherent detection. By increasing slightly higher computational complexity and using minimum number of pilot tones in the in-frame coherent detection, we can achieve the same performance as inter-frame coherent detection, where one complete OFDM symbol is wasted for pilot insertion. Other methods like conventional pilot channel estimation and blind data detection techniques are also used for data detection with higher computational complexity and complex algorithm [34]. But in our method, good performance can be obtained with lower computational complexity and using minimum number of pilot tones.

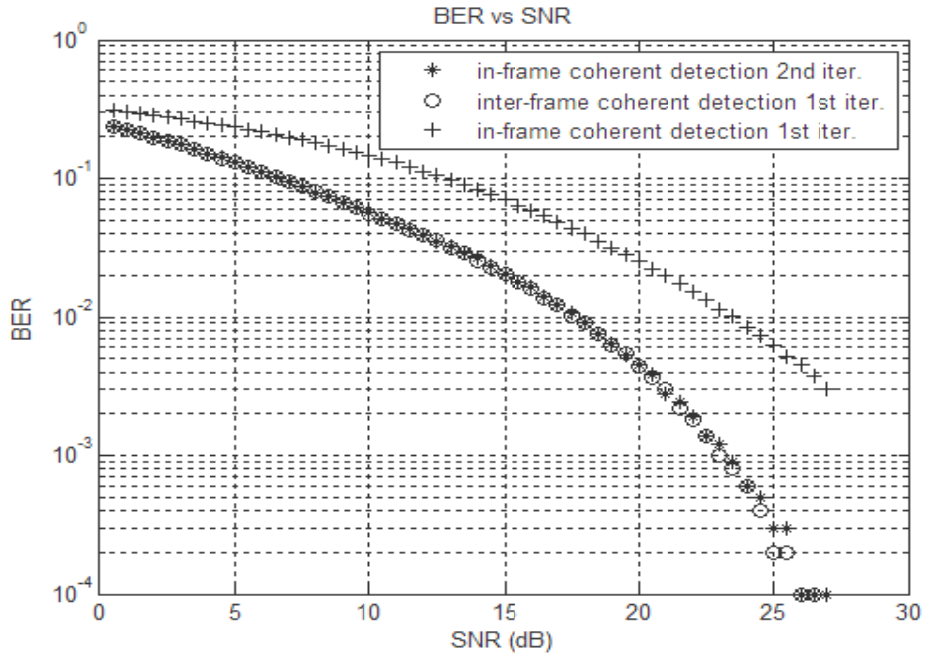

4.13 (a)

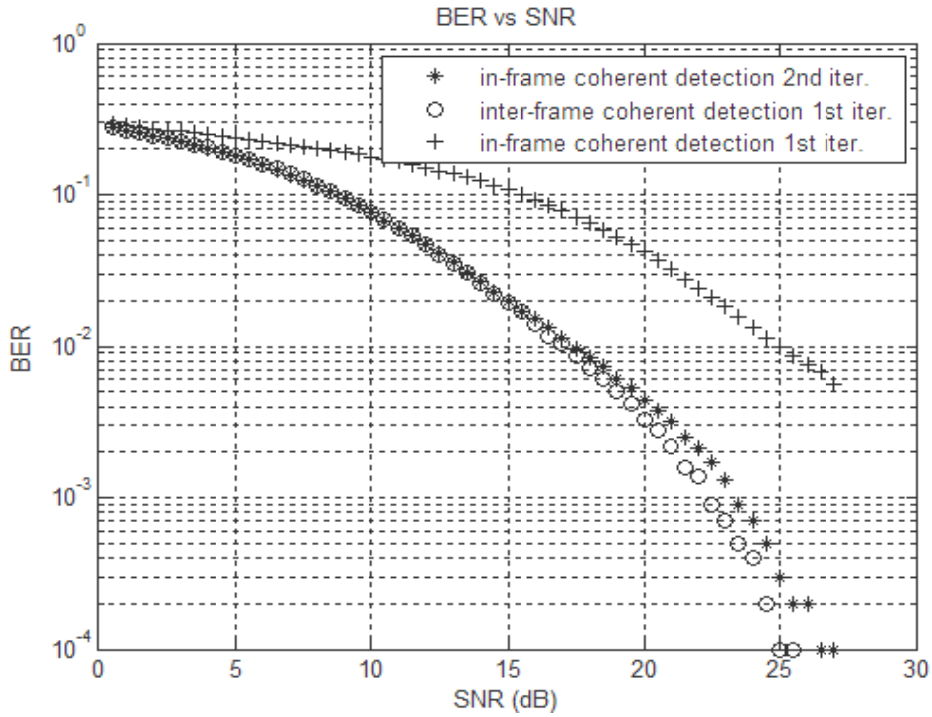

4.13 (b)

Fig. 4.13. BER comparison between in-frame and inter-frame coherent detection

4.4 Chapter Summary

In this chapter, we have used both the in-frame and inter-frame differential modulation schemes for the data detection of OFDM systems without having any channel information. Simulations are performed in zero mean white Gaussian noise environment.

For in-frame detection, based on our simulations, single differential performs better in low SNRs with low channel taps. Double differential detection works better in comparatively high SNRs. We observed that the performance of inter-frame differential detection is better in comparison to in-frame differential detection. But one complete pilot OFDM symbol for single differential and two pilot OFDM symbols for double differential are wasted in the inter-frame modulation. In the case of time-varying channel, channel taps should remain constant for at least one OFDM symbol for the in-frame differential modulation. For inter-frame modulation, channel taps should remain constant in two OFDM symbols for single differential and at least three OFDM symbols for double differential modulation. In practical wireless communication, channel taps hardly remain constant for more than one OFDM symbol. Therefore it may be advantageous to use the in-frame techniques. However, the BER need to be improved in order for this technique to work.

In order to improve the BER performance of in-frame techniques, we have used the results of the data detection to estimate the channel. It turns out that even though the BER is not good, a good estimate of the channel can be obtained, which in turn would results in improvement of data detection in the next iteration. This can be explained by the fact that bit errors occur near the channel nulls. In which case, channel frequency

components of smaller values become erroneous. If we can estimate the frequency components of higher values accurately then the output becomes comparable to noise and bit errors improve. This newly obtained data can be used for channel estimation again through iterative technique and the BER performance drastically improves in second iteration which we have shown in simulation results. Thus, we will advise to use in-frame differential modulation for time-varying channels, which uses only two pilot tones in double differential scheme. Performance can be improved significantly by increasing slightly higher computational complexity through iterative technique.

We also introduced a least squares (LS) based technique, where higher energy data of an OFDM symbol were used for channel estimation. It has been observed that 15% low energy data can be reduced from an OFDM symbol for channel estimation without compromising error performance.

CHAPTER 5
CONCLUSION

Orthogonal Frequency Division Multiplexing (OFDM) is widely applied in wireless communication systems due to its high data rate transmission capability, high bandwidth efficiency, and robustness to multipath delay. OFDM has been used in digital audio broadcasting (DAB) systems, digital video broadcasting (DVB) systems, digital subscriber line (DSL) standards and wireless LAN standards such as IEEE802.11a and European equivalent HIPERLAN/2. OFDM has also been proposed for wireless broadband access standards such as IEEE Standard 802.16g (WiMAX) and is the core technique for the fourth generation (4G) wireless mobile communication.

In the case of multipath reception, it becomes very difficult for the receiver to separate the original signal from the delayed signals which causes ISI. For broadband communication, this becomes even worse due to the high-rate of transmission. To mitigate the multipath fading effect, multicarrier technique like OFDM systems are used. Cyclic prefix is used as a guard interval in every OFDM symbol to avoid ISI. Generally, the last portion of an OFDM symbol is repeated in front of that symbol to create the guard interval. The guard intervals should be at least equal to or longer than the maximum delay spread of the channel. This type of cyclic prefix is easy to use and it will reduce some transmission efficiency due to extra data in OFDM symbols.

Channel estimation is required for the coherent data detection of OFDM systems which is not always an easy task in wireless communication. Channel estimation using conventional pilot insertion is a popular technique but it is not an efficient way. Channel capacity is wasted due to the extra pilot tones in every OFDM symbols. In this thesis, we

use differential modulation based incoherent data detection, where it is not needed to estimate channel at first. Moreover, differential detection is very easy to implement with low complexity. We use differential modulation schemes both in frequency and time directions. We apply a semi-blind approach for the data detection using in-frame differential modulation. Higher order differential modulation has been applied including single differential modulation. In our method, single differential modulation uses only one pilot tone, whereas double differential uses two pilot tones, and so on. Thus, overhead due to reference symbols are minimized and detection delay is reduced. From the simulation results, it has been observed that single differential works better at low SNRs with low channel taps, whereas double differential works better at higher SNRs. Simulation results show that higher order differential modulation schemes don't have any further advantage.

In the case of inter-frame modulation, we use single differential detection for the data detection and observe better results in comparison to in-frame differential detection. This happens as we modulate data using same subcarrier but different OFDM symbols. Although we get better results in inter-frame modulation, it costs us one complete OFDM symbol for pilot insertion under the constraint that the channel coefficients remain constant for at least two OFDM symbols for single differential detection. In practical wireless communication, channel parameters may change significantly from one OFDM symbol to another. In that case, in-frame differential detection is more useful than inter-frame detection. However, bit error rates need to be improved for this technique.

To improve the BER performance, our objective is to estimate channel coefficients accurately and perform coherent data detection using estimated channel. We use double differential modulation at higher SNRs to estimate channel coefficients. Good performance is observed at an SNR of 30 dB, where the mean square channel estimation error is about 10^{-2}. We use our estimated channel in coherent detection and observe a significant BER improvement in high SNRs. We further use iterative technique to improve channel estimation accuracy and observe that the BER performance improve drastically in second iteration. Thus, the in-frame differential detection can be used in OFDM systems for incoherent data detection using minimum number of pilot tones. By increasing a slightly higher computational complexity, we can use iterative technique for channel estimation and data detection can be performed with estimated channels in simple coherent detection. All the simulation results are shown in chapter 4.

As the channel estimation becomes quite difficult sometimes for time-varying channels, incoherent detection can be applied at first for the data detection and later performance can be improved using coherent detection with estimated channels. Differential detection is a promising technique for incoherent data detection. As we observe that the inter-frame differential detection gives better results, higher order inter-frame differential detection can be performed to investigate the performance improvement. Combined in-frame and inter-frame differential detection schemes can be used in OFDM systems and will be suggested for future research work.

REFERENCES

[1] J. J. Van de Beek, P. Odling, S. K. Wilson and P. O. Borjesson, "Orthogonal Frequency Division Multiplexing (OFDM)," *Division of Signal Processing*, Lulea University of Technology, Sweden.

[2] Alan V. Oppenheim and Ronald W. Schafer, *Discrete Signal Processing*, 2nd edition, Prentice Hall, Upper Saddle River, New Jersey 07458, 1999.

[3] Ahmad R. S. Bahai, Burton R. Saltzberg and Mustafa Ergen, *Multi-carrier Digital Communications: Theory and Applications of OFDM*, Second edition. (Information Technology: Transmission, Processing and Storage), 2004.

[4] Marc Engels, *Wireless OFDM Systems. How to make them work?*, IMEC., Belgium, 2002.

[5] Ramjee Prasad, *OFDM- for Wireless Communications Systems*, Artech House Universal Personal Communications, 2004.

[6] H. P. Manchala, "Equalization of OFDM Signals Using Pilot Carriers," MSc. Thesis, University of Texas at El Paso, December 2003.

[7] Yushi Shin and Ed Martinez, "Channel Estimation in OFDM system," *Freescal Semiconductor Inc.* 2006. AN3059.

[8] Sinem Coleri, Mustafa Ergen, Anuj Puri and Ahmad Bahai, "Channel Estimation Techniques Based on Pilot Arrangement in OFDM System," *IEEE Transactions on Broadcasting*, vol. 48, pp. 223-229, Sept. 2002.

[9] O. Edfors, M. Sandell, J. J. Van de Beek, S. K. Wilson and P. O. Brjesson, "On Channel Estimation in OFDM Systems," *In Proc. IEEE 45th Vehicular Technology Conference*, Chicago, IL, pp. 815-819, Jul. 1995.

[10] O. Edfors, M. Sandell, J. J. Van de Beek, S. K. Wilson and P. O. Brjesson, "OFDM Channel Estimation by Singular Value Decomposition," *IEEE Transactions on Communications*, vol. 46, No.7, pp. 931-939, July 1998.

[11] Marc C. Necker and Gordon L. Stuber, "Totally Blind Channel Estimation for OFDM on Fast Varying Mobile Radio Channels," *IEEE Transactions on Wireless Communications*, vol. 3, Issue. 5, pp. 1514-1525. Sept. 2004.

[12] H. H. Zeng, L. Tong, "Blind Channel Estimation Using the Second-order Statistics: Asymptotic Performance and Limitations," *IEEE Transactions on Signal Processing*, vol. 45, No. 8, pp. 2060-2071, August 1997.

[13] B. Muguet, M. de Courville, P. Duhamel, "Subspace Based Blind and Semi-Blind Channel Estimation for OFDM system," *IEEE Transactions on Signal Processing*, vol. 50, pp. 1699-1712, July 2002.

[14] M. K. Simon and D. Divsalar, "On the Implementation and Performance of Single and Double Differential Detection Schemes," *IEEE Trans. On Communication*, vol. 40, pp. 278-291, Feb. 1992.

[15] P. Stoica, J. Lin and J. Li, "Maximum Likelihood Double Differential Detection Clarified," *IEEE Trans. Information Theory*, vol. 50, pp. 572-576, Mar. 2004.

[16] M. R. Bhatnagar and A. Hjorungnes, "SER Expressions for Double Differential Modulation," *IEEE Information Theory Workshop*, pp. 203-207, Bergen, Norway, Jul. 2007.

[17] D. Divsalar and M. K. Simon, “Multiple-symbol differential detection of MPSK,” *IEEE Trans. Commun.*, vol. 38, pp. 300-308, Mar., 1990.

[18] D. K. van Alphen and W. C. Lindsey, “Higher-order differential phase shift keying modulation,” *IEEE Trans. On Commun.*, vol. 42, pp. 440-448, Apr. 1994.

[19] Rohling H. and May T., “OFDM Systems with Differential Modulation Schemes and Turbo Decoding Techniques,” In Proc. of *IEEE Broadband Communications*, pp. 251-255, ISBN: 0-780-5977-1, Zurich, 2000.

[20] M. K. Simon and M. S. Alouini, “Multiple symbol differential detection with diversity reception,” *IEEE Trans. Commun.*, vol. 49, pp. 1312-1319, Aug. 2001.

[21] Zhengdao Wang and Georgios B. Giannakis, “Wireless Multicarrier Communications,” *IEEE Signal Processing Magazine*, vol. 17, Issue. 3, pp. 29-48, May 2000.

[22] Marius Oltean, Eugen Marza and Miranda Nafornita, “BER performance of a differential OFDM system in Fading channels,” *IEEE Trans. On Electronics and Communications*, 2004.

[23] M. J. Dehghani, “Robust OFDM System with ml-HIM Encoding,” EURASIP *Journal on Wireless Communications and Networking*, Article ID 40264, pp. 1-7, 2006.

[24] J. A. Hurst and I. J. Wassell, “Double differentially demodulated scheme for short burst OFDM system operating in frequency selective environments,” *IEEE Electronics Letters*, vol. 36, No. 18, pp. 1559-1560.

[25] Wu Jiang and Wu Weiling, “A Comparative Study of Robust Channel Estimators for OFDM Systems,” *Proceedings of ICCT*, pp. 1932-1935, 2003.

[26] Boloix-Tortosa R., Payan-Somet F. J. and Murillo-Fuentes J. J. "Reduced complexity blind equalization schemes for ZP_OFDM systems," *IEEE SPAWC-2007*, ISBN: 978-1-4244-0955-6.

[27] Bertand Muquet, Zhengdao Wang, Gerorgios B. Giannakis, Marc de Courdeville, and Pierre Duhamel, "Cyclic prefixing or zero padding for wireless multicarrier transmissions?," *IEEE Trans. On Communications*, vol. 50, no. 12, pp. 2136-2148, December 2002.

[28] David Tse and Pramod Viswanath, *Fundamentals of Wireless Communication*, 1st edition, Cambridge University Press, 2005.

[29] Baoguo Yang, Khaled Ben Letaief, Roger S. Cheng and Zhigang Cao, "Channel Estiamtion for OFDM Transmission in Multipath Fading Channels Based on Parametric Channel Modeling," *IEEE Transaction on Communications*, vol. 49, pp. 467-479, March 2001.

[30] C. Li and S. Roy, "Subspace-based blind channel estimation for OFDM by exploiting virtual carriers," *IEEE Transaction on wireless Communications*, vol. 2, No. 1, pp. 141-150, Jan 2003.

[31] Athanasios Papoulis and S. Unnikrishna Pillai, *Probability, Random Variables and Stochastic Processes*, Mc Graw Hill, 4th ed., 2002.

[32] Weinstein, S. B., and P.M. Ebert, "Data Transmission by Frequency Division Multiplexing Using the Discrete Fourier Transform," *IEEE Trans. Communications*, Vol. COM-19, October 1971, pp. 628-634.

[33] Sari. H., G. Karma and I. Jeanclaude, “Transmission Techniques for Digital Terrestrial TV Broadcasting,” *IEEE Comm. Mag*., Vol. 33, February 1995, pp. 100-109.

[34] Tao Cui and Tellambura C., “Joint data detection and channel estimation for OFDM systems,” *IEEE Trans. On Communications*, Vol. 54, No. 4, pp. 670-679, April 2006.

[35] J. Rinne and M. Renfors, “Pilot spacing in orthogonal frequency division multiplexing systems on practical channels,” *IEEE Trans. On Consumer Electronics*, Vol. 42, No. 4, pp. 959-962, Nov. 1996.

[36] Y. Li, J. Cimini, and N. Sollenberger, “Robust channel estimation for OFDM systems with rapid dispersive fading channels,” *IEEE Trans. On Communications*, Vol. 46, No. 7, pp. 902-915, July 1998.