ENERGY EFFICIENCY MEASURES FOR DRIVE COOLING SYSTEM OF A MACHINE TOOL BY USE OF PHYSICAL SIMULATION MODELS

Kirchner, Henry; Rehm, Matthias; Quellmalz, Johannes; Schlegel, Holger

Technische Universität Chemnitz
Faculty of Mechanical Engineering
Institute for Machine Tools and Production Processes (IWP)
Reichenhainer Str. 70, 09126 Chemnitz, Germany

ABSTRACT

Due to global resource scarcity, the energy-efficient production constitutes an important measure for future-oriented operation of the manufacturing industry [1]. The machine tool as a central operational unit of production processes therefore offers a wide range of technical and technological capabilities for economization and optimization.
This paper deals with the development of a strategy to reduce the energy requirement of the drive coolant system of a machining center. Therefore several simulation models that build on one another with a high accuracy could be created. Based on these, three concepts with high potential for energy savings could be developed. Depending on the operating mode up to approximately 10 % of base load could be saved. In addition, the strategy can be applied to a wide range of different types of machine tools.

Index Terms – Energy efficiency, Machine Tool, Cooling unit

1. INTRODUCTION

Improved drive dynamics decisively boost productivity and accuracy of cutting machine tools but need thermal stability to ensure the process stability. Therefore the servo motors should be able to follow the enhanced dynamics without overheating. For that purpose selected motors are cooled by a customized ancillary unit. Since the amount of consumed electrical energy of the ancillary components is significant, compared to the total energy consumption of the machining center [2], a high potential for energy savings arises in this field of research [3]. The cooling unit solely accounts for about 20 to 30 % to this power consumption [4].
To ensure a controlled cooling of the servo motors, their temperatures are observed by calculations based on electrical values or alternatively using an additional temperature sensor. The cooling process is constituted by several physical basic processes of heat dissipation, such as conduction, convection and radiation. By means of multistage cooling circuits, which exist in variable designs, the heat will be transferred out of the machine.
Formerly a compressor chiller ran in permanent operation. In this case the excessed cooling power was wasted by a hot gas bypass control [5]. To reduce energy dissipation, modern chillers are equipped with an on-off controller in the secondary circuit and a coolant reservoir as a buffer in the primary circuit. The installed cooling power depends on the technological requirements of the machine tool.
The usage of an integrated standby-manager could be a further measure. This control software extension is responsible for a systematic shutdown of ancillary and auxiliary components in nonproductive time of the process.

©2014 - TU Ilmenau

The main target of this paper is to generate an overall approach for a strategy to reduce energy consumption of the cooling unit of machining centers. A machining center for turning and milling can therefore serve as reference and experimental machine. Those multifunctional production tools provide a large spectrum of manufacturing technologies and therefore be dimensioned very universally. That fact establishes a broad potential for optimization of cooling strategies for discrete production processes.
By means of appropriate simulation models and comparative experiments, new concepts for energy reduction should be stated and their potential should be quantified. Finally, the transferability of the concepts to other machine tools should be estimated.

2. APPROACH

The approach implies to develop a strategy for coolant supply on demand depending on the production process. Therefore it is necessary to determine the individual cooling demand for turning, milling or turn-milling. In order to generate and evaluate an energy efficient cooling strategy, a simulation model of the system is worthwhile. The benefits are cost-efficient testing conditions and safety against critical operating states of the machine.

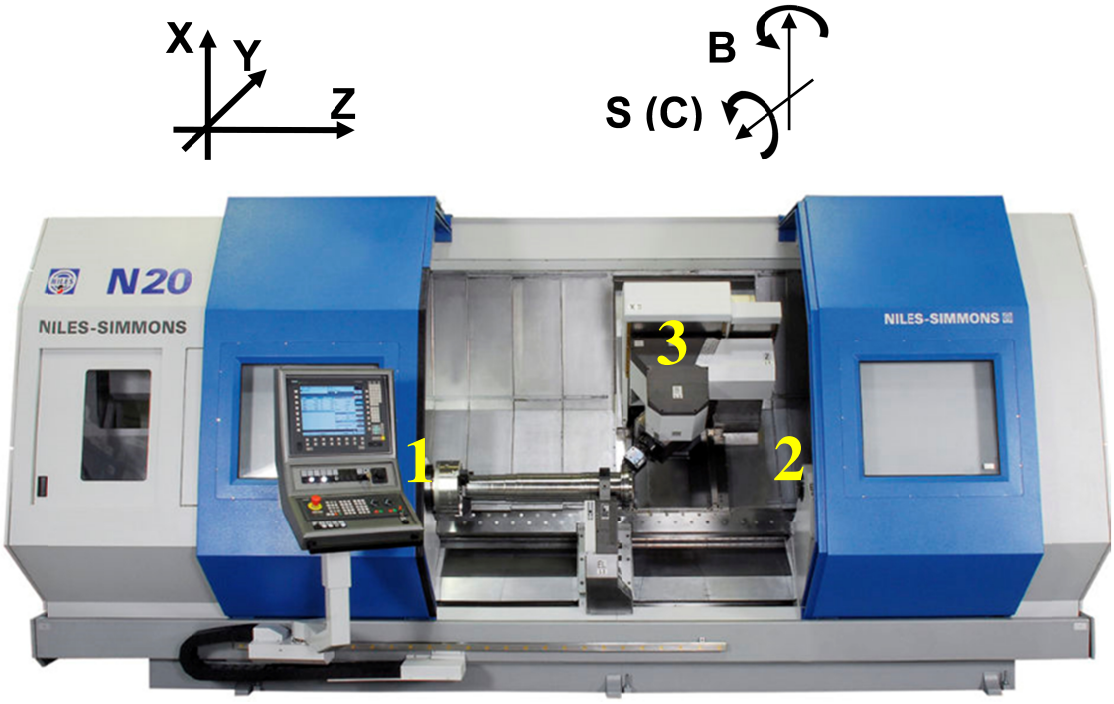

1) Main spindle, **2)** Counter spindle, **3)** Milling tower

Figure 1: Reference machining center for turning and milling (Co. Niles-Simmons)

Every information about the machine tool (geometrical parameters, data sheet information, etc.), stated in this paper, is taken from a modern machining center for turning and milling, which is shown in figure 1. The primary circuit of the coolant system consists of several semi-circulating systems according to the construction (comp. fig. 2). For emulating the hydraulic and thermal conditions in a simulation, these cooling sections need to be examined in detail. In consequence, one can get many input variables, which lead to a precise simulation model. Therefore controller-internal signals as well as system-integrated flow rate sensors and external installed pressure and temperature sensors can be used. Every machine tool will provide diverse measurements and sensors. Though the motor temperature will be the main

command variable. Other important physical values are the flow rate of the coolant and the pressure drop inside the hydraulic system, which both condition the heat transmission essentially.

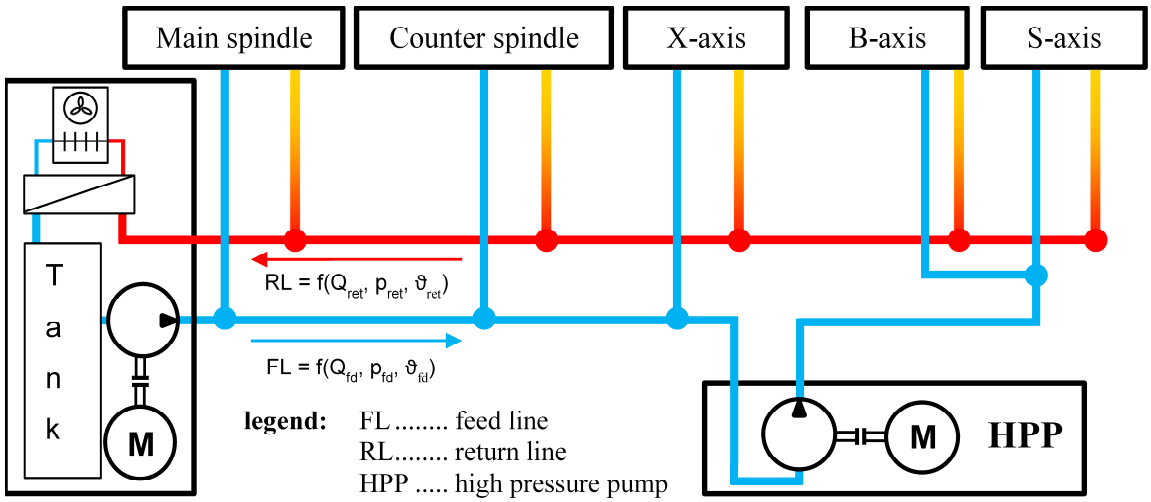

Figure 2: *Multistage coolant system of a machining center*

3. ANALYSIS OF THE ACTUAL STATE

The examination of the machining center culminated in a detailed scheme of the hydraulic cooling circuit, according to the simplified overview in figure 2. Four separate semi-circulating systems could be distinguished, namely:

- Main spindle circuit
- Counter spindle circuit
- Circuit of the feed axis X
- Circuit of the milling tower (B-axis and S-axis)

The main pressure is generated by a centrifugal pump inside a water chiller compact unit. The flow provides every sub-branch of the system with coolant. Due to the fact that the pressure drop within the milling tower pipes would cause a critical shortage of cooling power in this segment, this part of the system is equipped with a second centrifugal pump which has the same nominal data as the main pressure pump. The state-of-the-art water chiller operates with an on-off controller, so that the refrigerating compressor works in cyclic operation between a lower and a upper limiting temperature, buffered by the tanks capacity.
For the posterior evaluation of power savings the electric power consumption of the chiller aggregate and the auxiliary pump have been measured. The diagram in the upper section of Figure 3 shows the overall consumption of the cooling unit for about 40 minutes, while the machining center was idle. The three peaks of the curve mark the cyclic activation of the compressor. Although no machining process took place during the measurement time, the motors and especially the X-axis, which keeps the milling tower position controlled under the influence of gravity, discharge a certain amount of current heat into the coolant.
The lower diagram exemplarily shows the power consumption of each subcomponent at the enlarged first peak of the upper graph. In consideration of a higher heat input during the process time, the number of compressor activations can still increase.

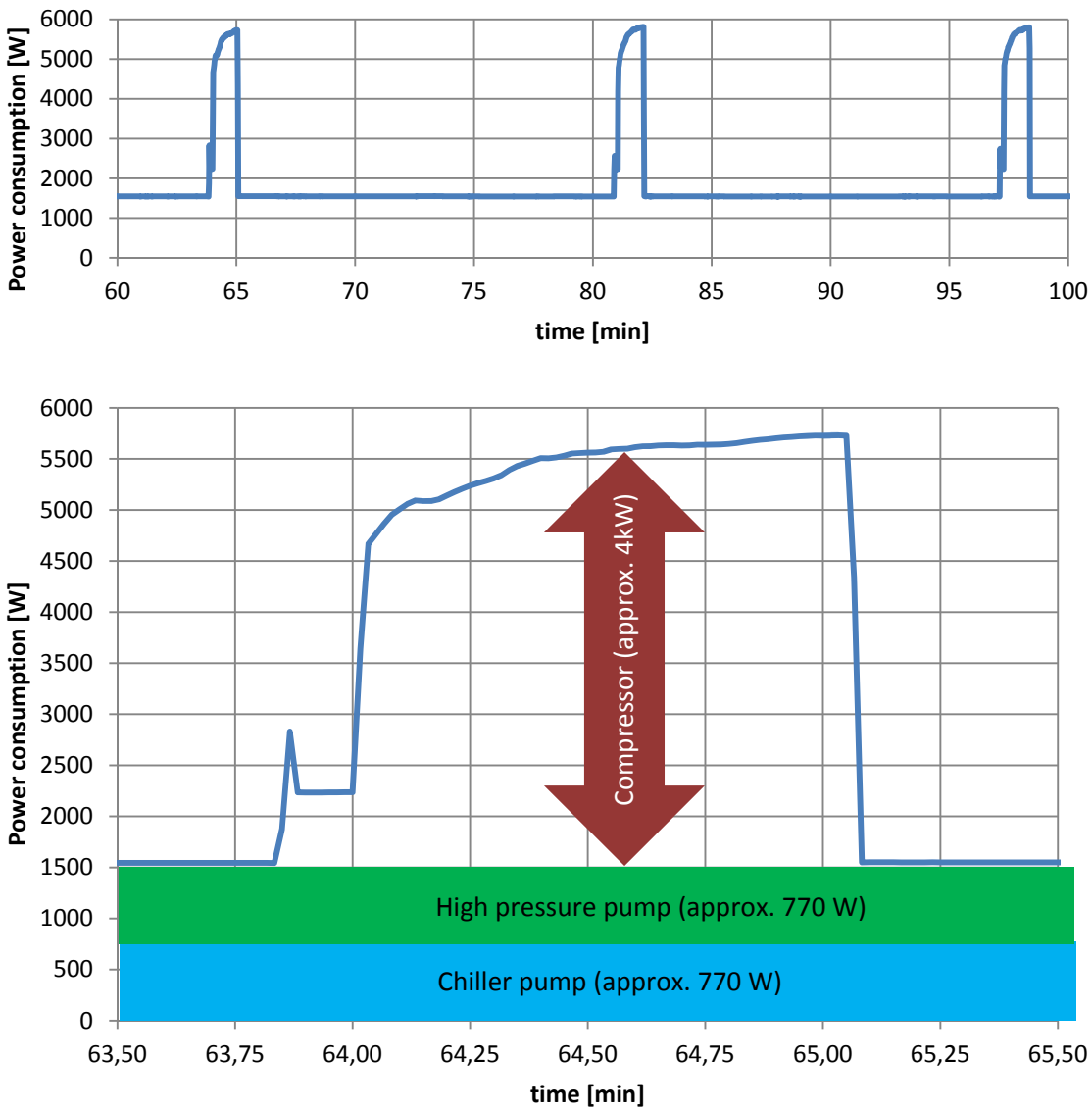

Figure 3: *Power consumption of the cooling unit; machining center idle*

To clarify the potential for energy savings even at this point of preliminary considerations, figure 4 points out that a possible deactivation of the high pressure pump could lead to a reduction in power consumption up to 30 % for the cooling unit. The consequences for the overall context of the machining center will further be explained in more detail.
Table 1 shows the axle configuration for different production processes. It becomes apparent that this overview forms the basis for the determination of the coolant supply on demand. It can be stated, that axes which are clamped and not part of the process itself need less cooling power than feed axes or even main drives. To quantify this proposition, different processing steps should be simulated. In addition to the detailed structural scheme of the cooling circuit some experiments, examining the thermal behavior and the fluid flow, should be executed.

Table 1: *Axle configurations for selected manufacturing processes*

Axis designation	Main spindle (MS)	Counter spindle (CS)	X (feed axis)	Y (feed axis)	B (swivel axis)	S (milling spindle)
Cooled	yes	yes	yes	no	yes	yes
Turning	M	optional	F	F	F	C
Milling	C/F	C	F	F	F	M
Hobbing	F	optional	F	F	F	M

Legend: M ..... Main drive
F..... Feed drive
C ..... Axis is clamped or position controlled (no feed motion)

4. SIMULATION MODEL

The quality of the simulation model, to be developed, depends on its depth of detail and hence on the available parameters. The parameterization requires specialized knowledge in the subjects fluid mechanics and thermo fluidics.
To simplify the development in the simulation environment, a division into two submodels, a hydraulic and a thermal simulation model, is worthwhile. The relevant input variables for the parameterization of each component could be found either in data sheets and physical tables or obtained by sensor signals within empirical research at the real machining center during non-critical operating states, as mentioned in chapter 3.

4.1 Hydraulic simulation model

The coolant flow rate through the servomotors cooling jacket is an essential variable for validating, if the cooling power is satisfactory for keeping thermal stability under real conditions. The pressure, which affects the fluid, is another necessary measurement to be identified, because of their physical interdependencies. By analogy with the electrical values current “I” and Voltage “U”, the flow rates in the system (analog I) emerges out of the pressure drop Δp (analog potential difference = voltage) and the hydraulic resistance (analog electrical resistance) of the considered component. Therefore, the primary consideration is to create a simulation model to such an extent, that it the occurring pressure and flow rates of the real cooling circuit correspond with the simulated ones. With the help of empirical determined parameters out of non-critical experiments the model should be evaluated. Subsequently, an exact simulation model result can rate, whether system states, depending on the deactivation of sub-branches, are critical or not in advance
After consulting the machine manufacturer all possible experimental configurations without the risk of damaging the cooling circuit or the whole machine could be identified. Figure 4 demonstrates the performed investigations. A successively deactivation of single branches of the cooling circuit has been carried out. The bright colored pipes were streamed by the coolant whereas the black pipes had been shut off via a ball valve.

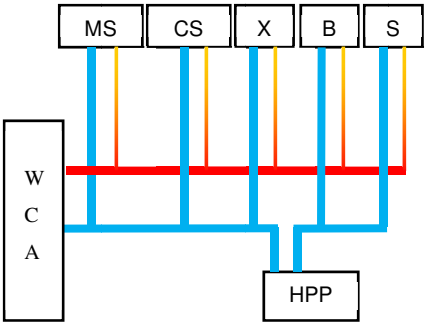

Cooling circuit unmodified

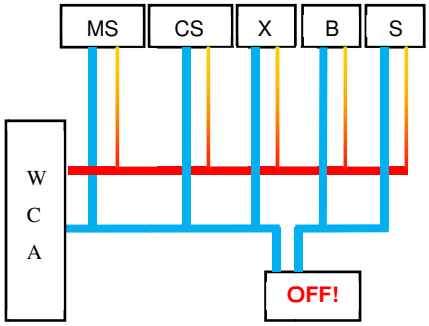

E1: Deactivation HPP

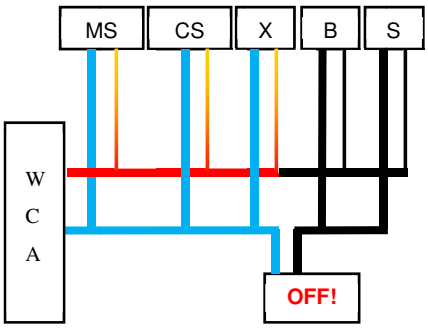

E2: E1 + deactivation MT

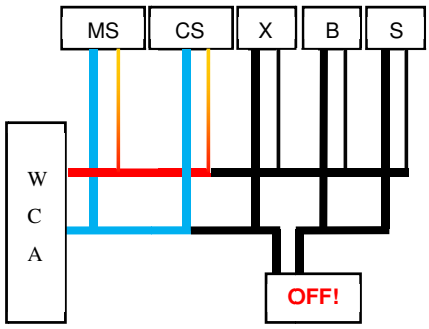

E3: E2 + deactivation X

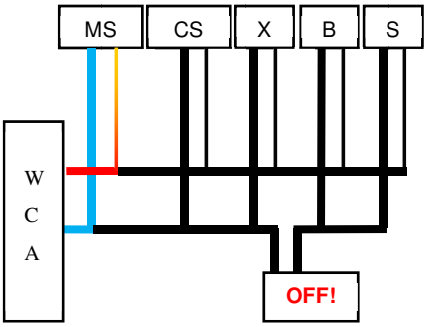

E4: E3 + deactivation CS

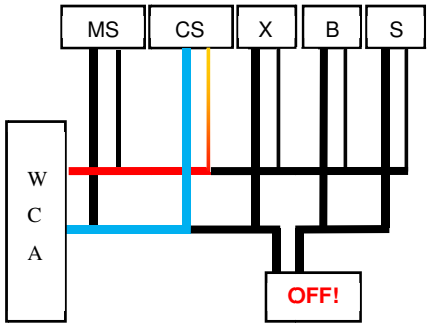

E5: E3 + deactivation MS

Legend:
WCA ... Water chiller aggregate
MT..... Milling tower
MS ..... Main spindle
CS ..... Counter spindle
E[…].... Experiment[…]

Figure 4: *Configurations of the cooling circuit for the experimental investigations*

To determine the fluid-dynamic behavior of the system, several sensors, pressure and temperature sensors had been applied. A strain gage-measuring element was used to determine the pressure at each monitoring executive. The flow rates were analyzed by sensors with elastic force measurement. Using all the collected data from the experiments and also from the research an elaborated simulation model was developed, which is represented in figure 5. It consists additionally of six sub-systems, which are interconnected in the structure, but not shown in figure 5. The four semi-circulating systems are separately marked.

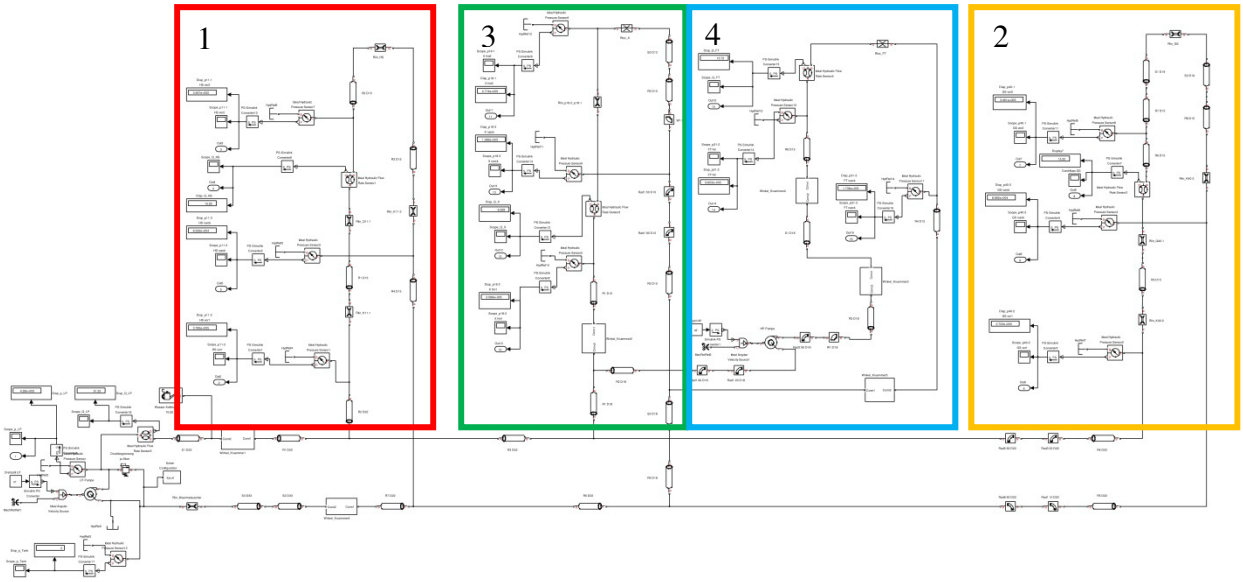

Legend:
1..... Main spindle circuit
2..... Counter spindle circuit
3..... Circuit of feed axis X
4..... Circuit of milling tower

Figure 5: *Hydraulic simulation model in Matlab Simulink*

There are several function blocks in Matlab Simulink which can be used for the emulation of the same hydraulic element. The quality of the simulation result depends on the accuracy of the input variables. The simulation model had to be improved successively, until the accuracy of all required variables was sufficient. The relative errors of the pressure and the flow rate at each measuring point are given in table 2 and table 3. The error specifies the aberration of the simulated value compared to the experimental value as arithmetic average over all configurations (comp. figure 4) in percent. The root mean square deviation (RMSD) serves for the validation of the failure between the individual measurements.

Table 2: *Simulative aberration compared to the experiments; pressure*

	Main pump	**Main spindle**		**Counter spindle**		**X-axis**		**Milling tower**	**Total**
Variable	p_MP1	p_MS1	p_MS2	p_CS1	p_CS2	p_X1	p_X2	p_MT1	p_T
Failure	1,0 %	2,0 %	3,3 %	2,4 %	3,7 %	2,2 %	0,3 %	2,1 %	***2,1 %***
RMSD	1,2 %	0,9 %	1,2 %	1,0 %	1,7 %	0,8 %	3,1 %	0,0 %	***1,2 %***

Table 3: *Simulative aberration compared to the experiments; flow rate*

	Main spindle	**Counter spindle**	**X-axis**	**Milling tower**	**Total**
Variable	Q_MS1	Q_CS1	Q_X1	Q_MT1	Q_T
Failure	3,2 %	4,8 %	4,8 %	4,4 %	***4,3 %***
RMSD	2,1 %	3,5 %	0,8 %	1,6 %	***2,0 %***

An averaged total aberration of 2,1 % for the hydraulic pressure and 4,3 % for the flow rates leads to the assessment that the simulation model has a sufficient accuracy and can be used for further predictions about the behavior of the hydraulic system in unidentified states.

4.2 Thermal simulation model

To realize a posterior validation of the thermal part of the simulation model, a similar approach as for the hydraulic model is worthwhile. Therefore, multiple temperature sensors have been installed in the cooling circuit to measure the temperature of the coolant. To reduce the measurement errors, caused by the influence of the pipe material, to a minimum, different sensors have been used for measurement. They are located on the pipe surface and also directly in the fluid. They had been positioned in a way, that the temperature of the feed line as well as the return of each branch of the cooling circuit can be taken as a measurement values.

Figure 6 shows three types of thermo-resistive measuring elements, which had been utilized. Although copper is a very good heat conductor, the thermal time constant of the Pt100 sensor with cooper jacket is too large for the present application. In contrast, the ceramic chip sensors were suitable for this requirement. Their structure is similar to a strain gage with an etched, meandering structure between a ceramic undercoating and a protection layer made from glass.

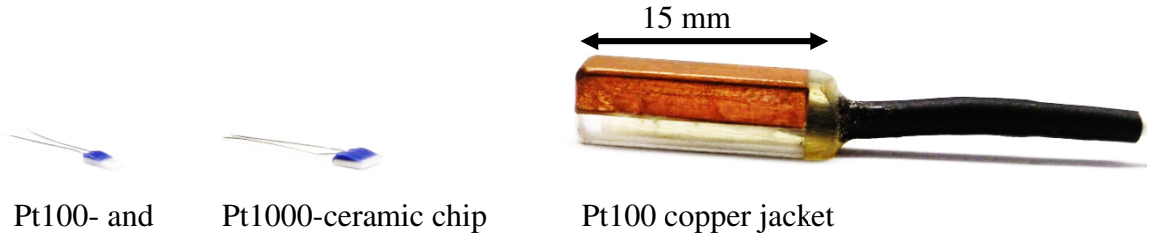

Figure 6: *Installed temperature sensors on the pipe surface*

To reproduce the cooling circuit and the motors as an overall thermal simulation model, first the subcomponents have to be analyzed successively. This should exemplarily be realized for the feed axis X. Due to its function in the machining center this axis is involved in nearly every manufacturing process. It is used as feed axis both, during turning and milling operations. The X-motor also has to move during tool changes and even during idle times of the machine this axis stays position controlled. Hence a permanent heat input at this location can be expected during the whole production process. The motor is exposed to a permanent thermal load. Therefore a thermal investigation at this motor is of particular importance.

In first approximation, the model for the X-motor has been emulated as a thermal single-body system. The signal flow plan arises out of the scheme in figure 7. The nominal power dissipation P_{VN} is determined by the nominal power of the motor P_N and the efficiency factor η_M. The thermal time constant T_θ is given in the datasheet and the nominal end-excess temperature $\Delta\theta_{\infty N}$.

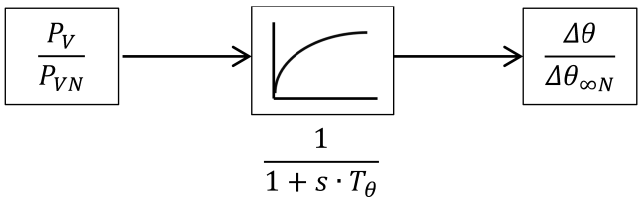

Figure 7: *Signal flow plan for the thermal single-body system*

The real power dissipation of the machining center is used as input variable for P_V. It can be traced by the machine control unit. Finally, the motor cooling power has to be emulated. Due to the fact that there is still no simulated value for the feed line temperature in this submodel,

the experimental recorded temperature of the motors inflow is used. The interconnecting factor between flow rate of the coolant and the heat dissipation of the motor is the heat transfer coefficient α. Actually, it will be determined by use of so called fluid mechanical similarity numbers. By means of the experimental values for the temperature gradients, the coefficient can be calculated by equation (1) [6]. The geometrical parameters pipe diameter D and pipe length L and also the specific isobaric heat capacity c_p are necessary as well. The material throughput $\dot{m}$ can be calculated by equation (2) with the values density ρ, flow rate c and cross section A.

$$\alpha = -\frac{ln\left(\frac{\theta_{RL} - \theta_M}{\theta_{VL} - \theta_M}\right) \cdot \dot{m} \cdot c_p}{D \cdot \pi \cdot L} \tag{1}$$

$$\dot{m} = \rho \cdot c \cdot A \tag{2}$$

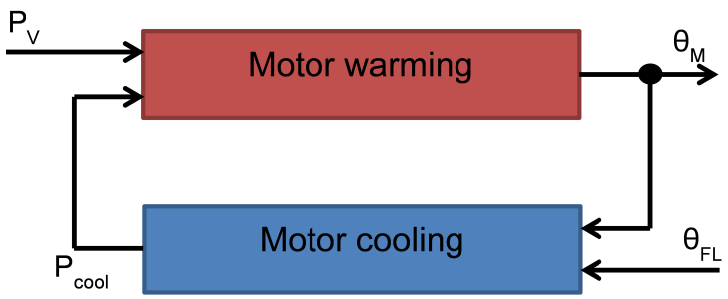

Figure 8: *Structural constitution of the thermal simulation model for the motor*

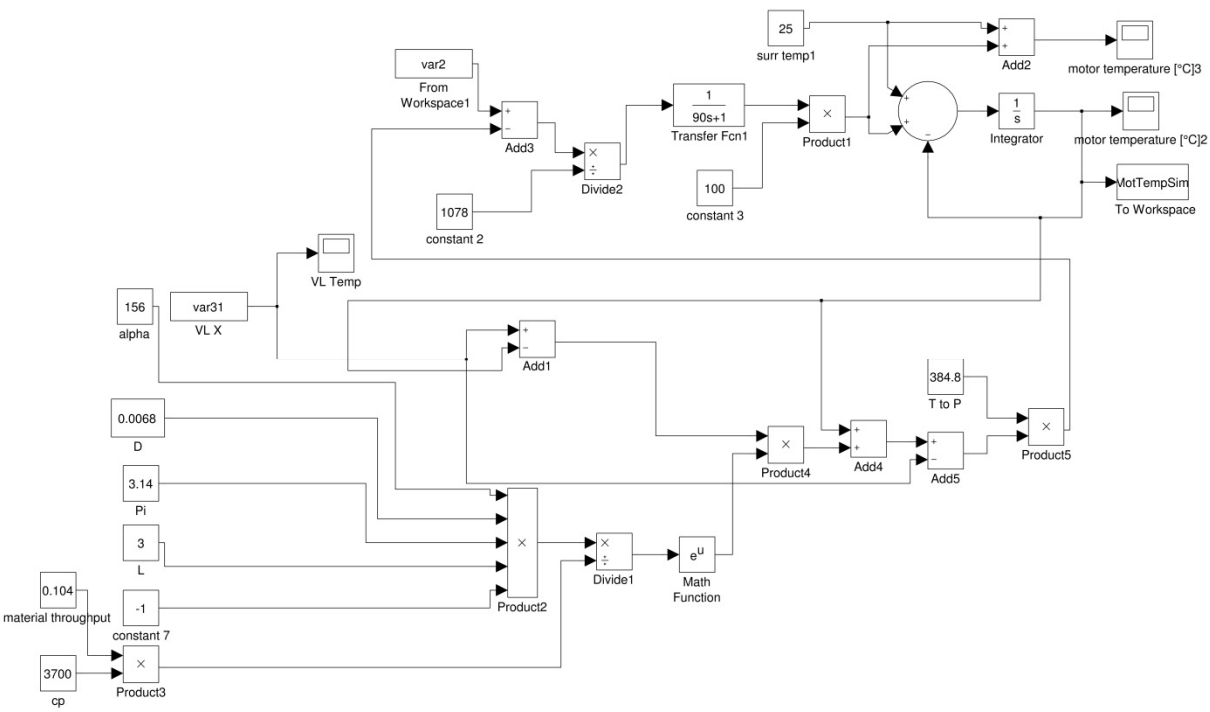

Figure 9: *Signal flow plan of the thermal submodel for the X axis*

The thermal model itself consists of two parts – one for the motor warming and one for the cooling (comp. figure 8). The first one calculates the actual temperature in the motor. The mathematical difference between power dissipation P_V and heat dissipation P_{cool} are the input

variables for this subsystem. The second submodel calculates the heat dissipation of the coolant out of the temperature gradient of the motor and the feed line (Θ_{FL}-Θ_M) in combination with the physical motor parameters. The two submodels for motor warming and for cooling are then subsequently combined in consideration of their physical interrelations. The signal flow plan, which has been created in Matlab Simulink is shown in Figure 9.

The validation of the thermal simulation was achieved by means of two experimental investigations at the machining center with varying production processes. Table 4 gives a short overview about the conditions of the examinations. Figures 10 and 11 show the recorded motor temperatures from the machine control trace in blue and the simulated curve in red.

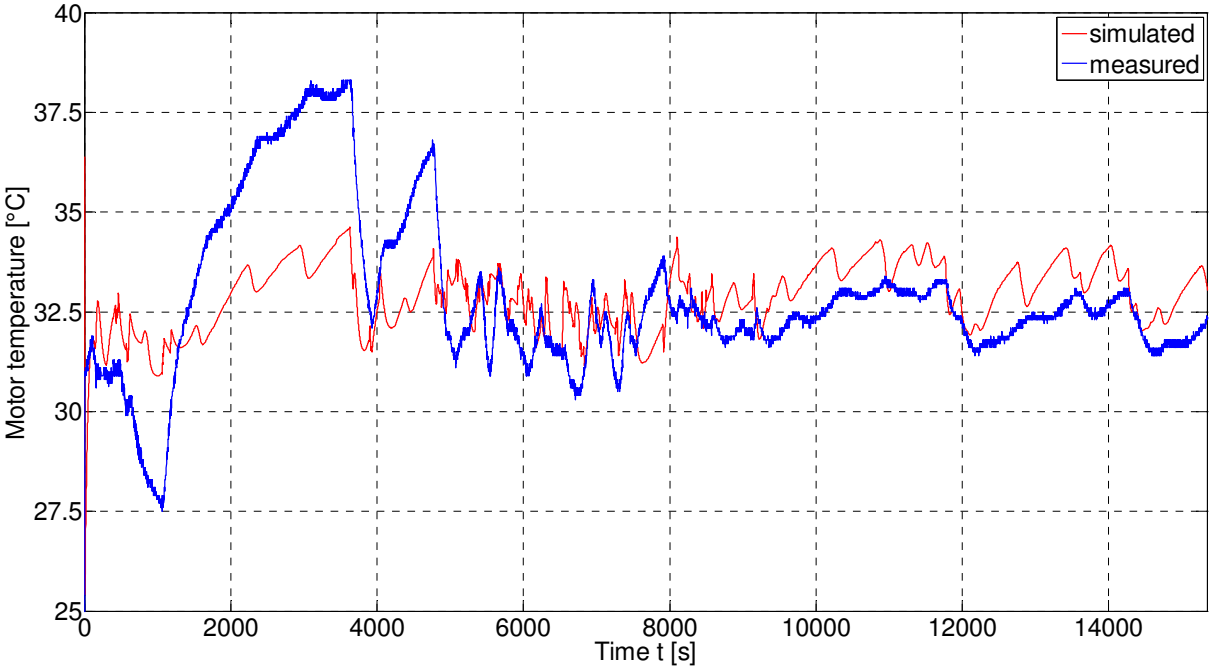

Figure 10: *Motor temperature during turning and milling operation; test series 1*

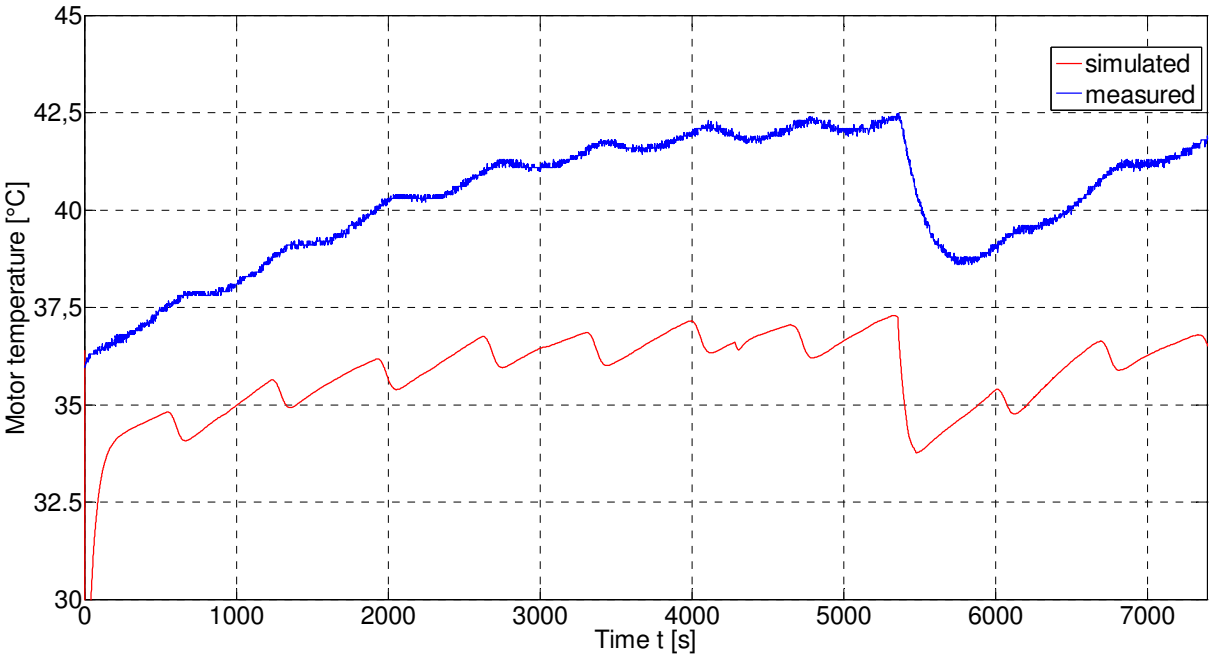

Figure 11: *Motor temperature during operational availability; test series 2*

Table 4: Constraints of the examined manufacturing processes

Descriptor	Duration	Constraints
Test series 1	Approx. 4 h	- Milling and turning operations - Idle times
Test series 2	Approx. 2 h	- Operational availability of the machining center - No cutting operations

A maximum aberration between the simulation and the experimental measurement of 15 % is being observed for test series 1. The peaks of the recorded curve are qualitatively reproducible with the simulated curve, but a time shift and larger differences of the absolute value in some sections become apparent. Though, the average level of temperature coincides very well for both plots. The existence of further time constants, which currently have not been taken into account could be a reason for the time shifted behavior.
Test series 2 shows a maximum aberration up to 17 % between the simulated and the measured values. The average level of temperature coincides still good with the real behavior. The failure can be detected merely in positive direction. This leads to the assumption that an unknown offset exists in the system. A possible aberration could arise by large fluctuations of the ambient temperature.

5. REQUIREMENTS FOR AN OVERALL SIMULATION MODEL

The previous results of the simulated and empirical determined data show that there is still a lot of research to do on the way to an overall simulation model for the whole cooling circuit. The already sufficient results for the X-axis could be further improved by an extension of the single-body system of the motor. A more accurate observation of the ambient temperature level can also be a measure for a higher accuracy of the model. Additionally as well heat sinks and sources which influence the thermal behavior of the system should be investigated An example could be the cooling lubricant for the process cooling at the cutting tool. The submodels for the remaining three subsystems can be generated subsequently, following the same approach than for X-axis. Once a high accuracy for all submodels can be observed, they can be interconnected to the overall model.

6. ENERGY SAVING MEASURES

Despite the fact that a complete simulation model is not yet established, energy saving strategies can already be posited based on the simulation results of the hydraulic and the thermal submodel as well as the experimental measured data. The three concepts are namely:

- Concept 1 – Activation/Deactivation of the high pressure pump on demand
The first concept insists the deactivation of the ancillary high pressure pump. This always leads to a decrease of the coolant flow rate in the circuit of the milling tower. Due to the milling spindle is clamped during turning operations there is no current flow in the field winding which could produce current heat. So the decreased cooling power is still sufficient to maintain the motor on a constant temperature level and assure thermal process stability of the machine tool. The B-axis will be charged in a varying quantity during turning processes depending on the feed motion. A detailed evaluation, whether the decreased cooling power is still sufficient in this case, can posterior be carried out with the help of the holistic thermal simulation model.

- Concept 2 –Deactivation of semi-circulating systems depending on the production process
The second concept constitutes an extension of the first one in the sense, that additionally whole sub-branches of the cooling circuit can be deactivated, as it was still examined in divers experimental preliminary investigations. Whether the thermal process stability can be sustained in those cases, has to be evaluated by the surface quality and the geometrical accuracy of a sample workpiece. The energy savings appear indirect. The flow rate of the other remaining circuits increases with the deactivation of selected sub-branches. This feature can be used, if the motors work at their upper limiting temperature. This could be assessed in one of the experimental measurements. The increased coolant flow rate causes a larger cooling power and thus raises the upper power limitation of the motor which is conditioned by the heat dissipation. Higher dynamics and feed velocities are possible and finally lead to shorter cycle times and therefore to a reduction of electrical power consumption of the constant consumers. These are the ancillary units, whose power consumption is much larger than the electric power for the proper production process.

- Concept 3 – Flow rate control by speed regulation
If the motors do not work at their upper thermal limit forces, it can be worthwhile to control the flow rate of the coolant by a frequency converter-controlled pump in the chiller aggregate and possibly also for the high pressure pump. Due to the coolant pump is a two-machine system consisting of a centrifugal pump and a motor, the energy savings will depend on the operating point of the system itself. By decreasing the effectiveness of the pump, the energy savings for the motor could at least partially be decreased, too.

The absolute values for energy savings can only be determined for concept 1. It can be calculated as the sum of its nominal electrical power consumption of the high pressure pump and the not warmed coolant, while passing through this machine, which leads to power savings in the chiller aggregate. Relating to the experimental machining center for turning and milling approximately 10 % of base load could be saved with this measure.
The energy savings of concept 2 can be estimated based on the reduction of cycle time. With the measured base load of 8000 W for the machine tool, the savings can be calculated as the product of the reduced time and the base load of the machine.
The reduction of energy consumption for the third concept depends on the two-machine system centrifugal pump and motor and therefore cannot be quantified, yet.

7. SUMMARY AND OUTLOOK

The paper shows an approach for a continuous theoretical and practical process of generating a physical simulation model for the cooling circuit of a machining center for turning and milling. With the help of divers experiments and mathematical calculations different sub-simulation models could be created, evaluated and improved. As mentioned, the hydraulic model showed good correlation with the coolant system. The analysis of the thermal behavior of the machining center revealed a lot of heat sinks and sources. Therefore, the thermal model should be created successively for each servo motor. Finally an accuracy up to 5 % for the hydraulic submodel and up to 15 % for the thermal submodel could be achieved.
Using simulation and reference experiments, various diverging constellations of the cooling circuit, realized by manipulating its physical parameters, could be investigated. As a result, three consecutive energy saving concepts for the cooling ancillary system can be stated. A first approach is the coolant supply on demand. Secondly, the deactivation of partial circuits of the cooling unit could lead to additional energy savings. As a third concept, the substitution

of the constant feed pump of the chiller by a frequency converter-controlled pump improves the overall energy efficiency.
The explained procedure can be transferred to any modern cutting machine tool, because of its theoretical approach. The detailed implementation always depends on the machine design and the production processes. A future research approach is the identification of relevant heat sinks and sources and its integration into the simulation model. Finally, the derived energy-saving concepts should be implemented into the machine control unit for an automated application.

REFERENCES

[1] Forschungszentrum Karlsruhe PTKA, Fraunhofer IWU, Fraunhofer IPA et al., "Energieeffizienz in der Produktion", Study, Federal Ministry for Education and Research Germany, Dresden, 2008

[2] Yufeng Li, Yan He, Yan Wang et al., "A framework for characterizing energy consumption of machining manufacturing systems", Internat. Journal of Production Research, Taylor & Francis, London, pp. 314-325, 2013-07-17

[3] E. Augstein, J. Nelles and A. Wurm, "Energieeffiziente Kühlsysteme für Werkzeugmaschinen", wt Werkstatttechnik online, Springer-VDI, Vol. H.5, No 102, pp. 306-311, 2012

[4] J. Nelles A. Wurm and E. Augstein, "Effiziente Werkzeugmaschine", Kälte Klima Aktuell, Vol. Großkälte, pp. 42-45, 2011

[5] C. Brecher, S. Bäumler, D. Jasper et al., „Energy Efficient Cooling Systems for Machine Tools", Leveraging Technology for a Sustainable World, CIRP, Berkeley, pp. 239-244, 2012

[6] R. Marek and K. Nitsche, Praxis der "Wärmeübertragung", Carl Hanser Verlag, München, 2010

CONTACTS

DI Henry Kirchner henry.kirchner@mb.tu-chemnitz.de
DI Matthias Rehm matthias.rehm@mb.tu-chemnitz.de
DI Johannes Quellmalz johannes.quellmalz@mb.tu-chemnitz.de
Dr.-Ing. Holger Schlegel holger.schlegel@mb.tu-chemnitz.de