Purdue University
Purdue e-Pubs

Department of Electrical and Computer Engineering Technical Reports

Department of Electrical and Computer Engineering

11-1-1989

PUPHS2D 2.0 User's Manual

P. E. Dodd
Purdue University

P. D. DeMoulin
Purdue University

M. S. Lundstrom
Purdue University

Follow this and additional works at: https://docs.lib.purdue.edu/ecetr

Dodd, P. E.; DeMoulin, P. D.; and Lundstrom, M. S., "PUPHS2D 2.0 User's Manual" (1989). *Department of Electrical and Computer Engineering Technical Reports.* Paper 685.
https://docs.lib.purdue.edu/ecetr/685

This document has been made available through Purdue e-Pubs, a service of the Purdue University Libraries. Please contact epubs@purdue.edu for additional information.

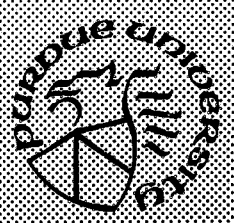

PUPHS2D 2.0
User's Manual

P. E. Dodd
P. D. DeMoulin
M. S. Lundstrom

TR-EE 89-62
November, 1989

School of Electrical Engineering
Purdue University
West Lafayette, Indiana 47907

PUPHS2D
USER'S MANUAL

Version 2.0

Paul E. Dodd
Paul D. DeMoulin
Mark S. Lundstrom
School of Electrical Engineering
Purdue University
West Lafayette, Indiana 47907
November 1989

The Purdue University Program for Heterostructure Simulation in Two Dimensions (PUPHS2D) solves Poisson's equation and the electron and hole continuity equations within a two–dimensional heterostructure device. The program will compute the electrostatic potential, electron and hole densities, recombination rate, and other quantities of interest as a function of applied bias. Like its predecessor, version 2.0 allows extensive analysis of solar cells, including computation of the current–voltage characteristics of two–terminal devices, solar cell parameters, quantum efficiency, and current versus solar intensity. Extensions to version 2.0 include transient analysis and bipolar transistor capability. The heterojunction bipolar transistor routines allow computation of dc currents as a function of applied bias, as well as quasi–static evaluation of the high–frequency behavior. A simplified energy balance equation has been added in the interest of more accurately computing high–field characteristics, and should be viewed as a preliminary step toward this goal. PUPHS2D stands as an accurate model for computing low–field device characteristics and recombinative losses.

While PUPHS2D was written for the ternary $Al_xGa_{1-x}As$, all material–specific parameters are contained within a single subroutine (BANDX), except for absorption coefficient and carrier mobilities which are computed in subroutines ALGABS and SETMOB, respectively. Material–specific parameters used for the energy balance equation are found in subroutines INITMU and INITAU. The program may be readily modified to analyze other semiconductors. For a more thorough discussion of the theoretical basis and numerical implementation of PUPHS2D, the user is directed to the references. Materials parameters are described in reference [1].

Various phases of the development of PUPHS2D have been supported by the Semiconductor Research Corporation, Sandia National Laboratories, the Eastman Kodak Company, and by Research Triangle Institute.

© Copyright, 1989 by Purdue Research Foundation, West Lafayette, Indiana 47907. All Rights Reserved. Unless permission is granted, this material shall not be copied, reproduced or coded for reproduction by any electrical, mechanical or chemical processes, or combinations thereof, now known or later developed.

TABLE OF CONTENTS

INPUT FORMAT 1
- MESH (GRID) 3
- SOLVE 5
- DEVICE 7
- DOPING 8
- MATTER 11
- LIFETIME 13
- SURFACE 15
- CONTACT 17
- COMPUTE 19
- IV 20
- SCELL 21
- QE 22
- INTSITY 23
- FET 24
- BIPOLAR 26
- TRANSNT 29
- ENERGY 31
- OPTICAL 32
- PRINT 34
- SAVE 35

REFERENCES 36
APPENDIX A: DEFAULT INPUT DECK 37
APPENDIX B: EXAMPLE INPUT DECKS 38
APPENDIX C: EXAMPLE OUTPUT 44
- Example #2: Homojunction diode for testing 44
- Example #4: HBT with surface recombination 46

APPENDIX D: DATA RETRIEVAL PROGRAM 65
APPENDIX E: DEFAULT INPUT DECK FOR RETRIEVE 67
APPENDIX F: PUPHS2D INSTALLATION NOTES 68

INPUT FORMAT

The input deck for PUPHS2D is loosely based on the FORTRAN NAMELIST statement.
An input card has the form:

```
NAME  KEY1=VALUE1, KEY2=STRING2, ..., KEYn=VALUEn
+     ARRAY1=VA1/VA2/VA3/VA4, ARRAY2=WA1/WA2
+     ARRAY2=WA3/WA4
```

Each card begins in column 1 with its name; a card may be up to 5 lines long. If a card is longer than one line, the continuation symbol, +, must appear in column 1 for lines 2, 3, 4, etc. Commas or blanks are assumed to be separators; any number of separators may appear between assignments. An assignment cannot contain any blanks, i.e.

PARM = – 12.0

is not valid. The above assignment should read:

PARM=–12.0

Values are assigned to arrays by separating the values by /'s In the example card shown above, values are defined for ARRAY1(1), ARRAY1(2), ARRAY1(3), ARRAY1(4), and for ARRAY2(1), and ARRAY2(2). Any parameter that does not appear in the card assumes its default value. Only those keys that are to be changed from their default value need to be specified. If the default values are to be used for all parameters of the card, the card need not appear.

Special care should be taken when continuing cards since array elements cannot be continued across lines. For example, the following card is NOT ALLOWED:

```
NAME  KEY1=VALUE1, KEY2=STRING2, ..., KEYn=VALUEn
+     ARRAY1=VA1/VA2/VA3/VA4, ARRAY2=WA1/WA2/
+    WA3/WA4
```

The array should either be contained on one line or continued as shown above in the first example.

The input deck consists of a title followed by several other cards. The *TITLE card, which consists of up to 80 characters, is used to identify the simulation run; it must not be omitted. For the other cards, order is not significant. On the following pages, we briefly describe the allowed keys and their default values for of the cards.

MESH (GRID)

The MESH card is used to specify the finite difference mesh for the problem. Since the accuracy of the computed results is to a great extent determined by the quality of the mesh, it must be carefully specified. When specifying the mesh, several nodes should be placed in each of the material and doping layers defined. Nodes should be concentrated where the electrostatic potential (or the space–charge density) is expected to vary rapidly.

The MESH keys are:

NODESX

The total number of nodes in the x–direction. Allowed values are integers from 1 to 100. Since the total number of nodes cannot exceed 2000, (NODESX+1)x(NODESY+1) must be less than or equal to 2000.
Default value: NODESX=40

NODESY

The total number of nodes in the y–direction. Allowed values are integers from 1 to 100. Since the total number of nodes cannot exceed 2000, (NODESX+1)x(NODESY+1) must be less than or equal to 2000.
Default value: NODESY=40

XD(i)

The user–specified mesh is defined by dividing the device length in the x–direction into a number of sections, then placing a specified number of nodes uniformly within each region. The XD(i) keys, where $1 \leq i \leq 10$, specify the right edge of each section in micrometers.
Default value: XD(1)=10.

YD(i)

The user–specified mesh is defined by dividing the device length in the y–direction into a number of sections, then placing a specified number of nodes uniformly within each region. The YD(i) keys, where $1 \leq i \leq 10$, specify the right edge of each section in micrometers.
Default value: YD(1)=10.

NXD(i)

The number of x–nodes to be placed within each of the x–sections. NXD(i) values must be specified for each XD(i) specified. The sum of the NXD(i), the total number of x–nodes, must not exceed 100. Note that the $x = 0$ boundary node is not among these, but the boundary at $x = L$ is (the last node may be at most, node 100).
Default value: NXD(1)=40

NYD(i)

The number of y–nodes to be placed within each of the y–sections. NYD(i) values must be specified for each YD(i) specified. The sum of the NYD(i), the total number of y–nodes, must not exceed 100.
Default value: NYD(1)=50

SOLVE

The SOLVE card is used to specify iteration and convergence criteria for the finite difference solution. For most applications, the default values of these parameters should suffice. Note that changes to DVMAX can affect the accuracy of the results.

The SOLVE keys are:

DVMAXQ

Before iteration can be terminated, the maximum change in the electrostatic potential between iterations in the equilibrium solution must be less than DVMAXQ. DVMAXQ is a dimensionless voltage measured in units of kT/q.

Default value: DVMAXQ=1.0e-04

DVMAX

Before iteration can be terminated, the maximum change in the electrostatic potential between iterations in the nonequilibrium solution must be less than DVMAX. DVMAX is a dimensionless voltage measured in units of kT/q.

Default value: DVMAX=1.0e-03

ITMAXQ

ITMAXQ is the maximum number of iterations allowed in the equilibrium solution. The program aborts if convergence it not achieved in ITMAXQ or fewer iterations.

Default value: ITMAXQ=120

ITMAX

ITMAX is the maximum number of iterations allowed in the nonequilibrium solution. The program aborts if convergence it not achieved in ITMAX or fewer iterations.

Default value: ITMAX=50

IDVRG

IDVRG is the maximum number of iterations for which the maximum change in potential may increase before divergence is presumed.

Default value: IDVRG=5

MTEST

If the maximum correction in electrostatic potential (in kT/q) is less than MTEST, then use the previous Jacobi matrix.
Default value: MTEST=0.0

MTMX

If the number of iterations for which the maximum correction is less than MTEST exceeds MTMX, then recompute the Jacobi matrix.
Default value: MTMX=3

OMEGA

OMEGA is an over–relaxation parameter which aids in convergence speed of the equilibrium solution.
Default value: OMEGA=1.5

GUESS

GUESS is a character string which specifies the method by which the electrostatic potential is changed due to an applied bias. When GUESS is set to SPLIT, the quasi–fermi levels in the p– and n–type regions are split by the applied bias. If GUESS is set to LAPLACE, then the change in electrostatic potential will satisfy the Laplace equation. (GUESS is ignored for field–effect transistors.)
Default value: GUESS=SPLIT

DEVICE

The DEVICE card is used to specify certain device–related parameters for the simulation such as the device length and operating temperature.

The DEVICE keys are:

TEMP

A real variable that specifies the operating temperature in degrees celsius.

Default value: TEMP=27.0

XMAX

The device length along the x–direction in micrometers.

Default value: XMAX=10.

YMAX

The device length along the y–direction in micrometers.

Default value: YMAX=10.

DOPING

The DOPING card is used to specify the position–dependent donor and acceptor concentrations and related parameters.

The DOPING keys are:

BEGIN(i)

The left (for profiles in the y–direction) or bottom (for profiles in the x–direction) endpoint for a doping profile. BEGIN(i), where $1 \leq i \leq 10$, is specified in microns.

Default value: BEGIN(1)=0.0.

END(i)

The right (for profiles in the y–direction) or top (for profiles in the x–direction) endpoint for a doping profile. END(i), where $1 \leq i \leq 10$, is specified in microns.

Default value: END(1)=10.0

PROFILE(i)

A string identifying each doping profile (up to 10 profiles allowed). Allowed values are:

PROFILE=UNIFORM:	uniform
PROFILE=ERFC:	complementary error function
PROFILE=GAUSS:	gaussian
PROFILE=NONE:	no profile
PROFILE=DATA1:	data file on tape 1
PROFILE=DATA2:	data file on tape 2
PROFILE=DATA3:	data file on tape 3
PROFILE=DATA4:	data file on tape 4

Default value: PROFILE(1)=UNIFORM

PEAK(i)

The peak concentration per cubic centimeter of the ith profile; p–type concentrations are specified as negative numbers, n–type dopants are positive.

Default value: PEAK(1)=5.0E18

ZPEAK(i)

The location of the peak concentration from the BEGIN, END line in micrometers (=0.0 for ERFC profile).
Default value: ZPEAK(1)=1.0

DIRECT(i)

A character string which specifies the direction of the diffusion of the ith profile. Allowed values are:

DIRECT=Y+ : direct diffusion up
DIRECT=Y– : direct diffusion down
DIRECT=X+ : direct diffusion to the right
DIRECT=X– : direct diffusion to the left

Default value: DIRECT(1)=Y+

XJ(i)

The junction depth of the ith profile in micrometers.
Default value: XJ(1)=1.0

SURFACE(i)

The y or x location of the surface of the ith profile in micrometers.
Default value: SURFACE(1)=0.0

DOPBLK

The background concentration per cubic centimeter (p–type < 0, n–type > 0).
Default value: DOPBLK=0.0

BGN

A logical variable which invokes bandgap narrowing in p–type GaAs.
Default value: BGN=FALSE

An example of the DOPING card key definitions is shown below for a structure with two uniform doping regions. Note that direct(i) = y+ basically defines a coordinate system as indicated, with (0,0) located at the bottom left corner of the structure.

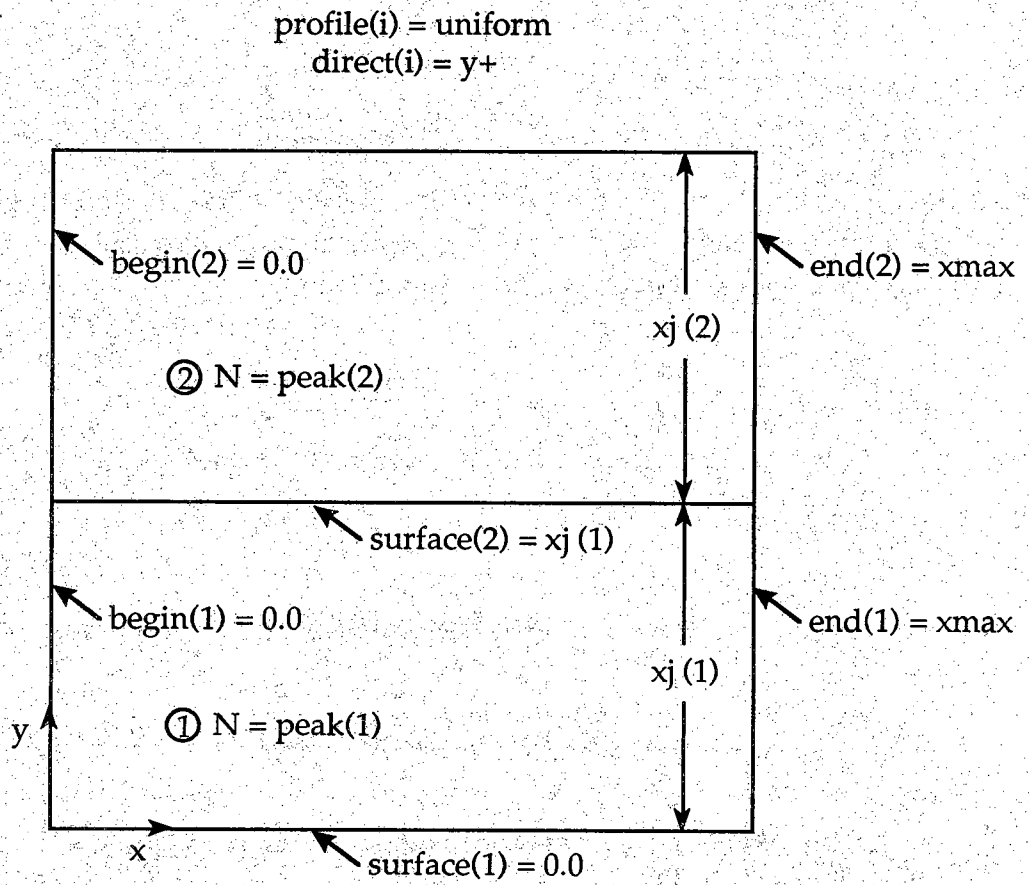

MATTER

The MATTER card is used to specify the position–dependent material composition.

The MATTER keys are:

XLL(i)

An array which specifies the location of the left edge of the ith rectangle ($1 \le i \le 5$).

Default value: XLL(1)=0.0.

YLL(i)

An array which specifies the location of the bottom edge of the ith rectangle ($1 \le i \le 5$).

Default value: YLL(1)=0.0.

WX(i)

An array which specifies the width of the ith rectangle along the x–direction ($1 \le i \le 5$).

Default value: WX(1)=10.0.

WY(i)

An array which specifies the width of the ith rectangle along the y–direction ($1 \le i \le 5$).

Default value: WY(1)=10.0.

XAL(i)

The AlAs mole fraction of the ith rectangle. XAL(i) must be ≥ 0 and ≤ 1.

Default value: XAL(1)=0.0

DECFRC

A real parameter that controls the magnitude of the conduction band discontinuity in AlGaAs:GaAs. The program computes ΔE_C = DECFRC*ΔE_G, where ΔE_G is the bandgap difference between the two materials.

Default value: DECFRC=.67

UGRADE

A logical variable that, if true, indicates that the user is supplying a FORTRAN subroutine, UMAT, to define the AlAs mole fraction versus position.
Default value: UGRADE=FALSE

An example of the MATTER card key definitions is shown below for a structure with two material regions. Note that the coordinate system is always as indicated, with (0,0) located at the bottom left corner of the structure.

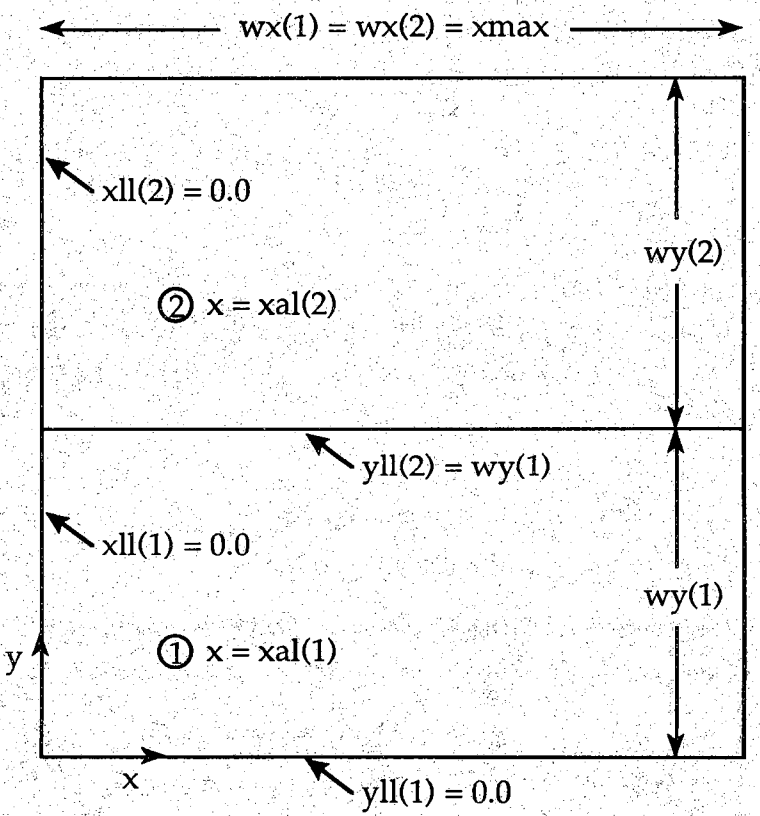

LIFETIME

The LIFETIME card is used to specify recombination parameters in the bulk material.

The LIFETIME keys are:

XLL(i)

An array which specifies the location of the left edge of the ith rectangle ($1 \leq i \leq 10$).

Default value: XLL(1)=0.0.

YLL(i)

An array which specifies the location of the bottom edge of the ith rectangle ($1 \leq i \leq 10$).

Default value: YLL(1)=0.0.

WX(i)

An array which specifies the width of the ith rectangle along the x–direction ($1 \leq i \leq 10$).

Default value: WX(1)=0.0.

WY(i)

An array which specifies the width of the ith rectangle along the y–direction

($1 \leq i \leq 10$).

Default value: WY(1)=0.0.

TAUN(i)

An array which specifies the SRH electron lifetime (sec) of the ith rectangle. The actual lifetime will be TAUN/(1+DOP/NC) where DOP is the total impurity concentration.

Default value: TAUN=1.0E-9

TAUP(i)

An array which specifies the SRH hole lifetime (sec) of the ith rectangle. The actual lifetime will be TAUP/(1+DOP/NC) where DOP is the total impurity concentration.

Default value: TAUP=1.0E-9

NC

A nonphysical value which specifies the cutoff for impurity dependent SRH lifetime (cm^{-3}).
Default value: NC=1.0E50

ET

The trap level with respect to the intrinsic level (eV).
Default value: ET=0.0

AN

The electron Auger coefficient (cm^6/sec).
Default value: AN=0.21E-28

AP

The hole Auger coefficient (cm^6/sec).
Default value: AP=0.0

A0

The radiative recombination term (cm^6/sec).
Default value: A0=2.0E-10

SURFACE

The SURFACE card is used to specify the charge density and recombination parameters at the surfaces of the device.

The SURFACE keys are:

QSSTOP

The fixed charge per square centimeter on the top surface.
Default value: QSSTOP=0.0

QSSBOT

The fixed charge per square centimeter on the bottom surface.
Default value: QSSBOT=0.0

QSSRIT

The fixed charge per square centimeter on the right surface.
Default value: QSSRIT=0.0

QSSLEF

The fixed charge per square centimeter on the left surface.
Default value: QSSLEF=0.0

SNTOP

The electron surface recombination velocity along top boundary.
Default value: SNTOP=0.0

SNBOT

The electron surface recombination velocity along bottom boundary.
Default value: SNBOT=0.0

SNLEF

The electron surface recombination velocity along left boundary.
Default value: SNLEF=0.0

SNRIT

The electron surface recombination velocity along right boundary.
Default value: SNRIT=0.0

SPTOP

The hole surface recombination velocity along top boundary (cm/sec).
Default value: SPTOP=0.0

SPBOT

The hole surface recombination velocity along bottom boundary (cm/sec).
Default value: SPBOT=0.0

SPLEF

The hole surface recombination velocity along left boundary (cm/sec).
Default value: SPLEF=0.0

SPRIT

The hole surface recombination velocity along right boundary (cm/sec).
Default value: SPRIT=0.0

ETS

The surface state trap level with respect to the intrinsic level (eV).
Default value: ETS=0.0

CONTACT

The CONTACT card is used to specify the type and location of the metal contacts.

The CONTACT keys are:

BEGIN(i)

An array which specifies the location of the left or bottom edge of the ith contact ($1 \leq i \leq 5$).

Default value: BEGIN(1)=0.0

END(i)

An array which specifies the location of the right or top edge of the ith contact ($1 \leq i \leq 5$).

Default value: END(1)=10.0

TYPE(i)

A character string which specifies the type of contact ($1 \leq i \leq 5$). Allowed values are:

TYPE=OHMIC:	ohmic contact (space–charge neutrality assumed)
TYPE=SB:	Schottky barrier contact
TYPE=NONE:	no contact

Default value: TYPE(1)=OHMIC

LOCATE(i)

A character string which specifies the location of the ith contact ($1 \leq i \leq 5$). Allowed values are:

LOCATE=TOP:	indicates top contact
LOCATE=BOTTOM:	indicates bottom contact
LOCATE=RIGHT:	indicates right contact
LOCATE=LEFT:	indicates left contact

Default value: LOCATE(1)=BOTTOM

PHIM(i)

If TYPE=SB, then the metal work function, PHIM (in electron volts), must be specified.
Default value: PHIM=5.02 (Al:GaAs)

IDEAL

A logical variable which, if true, will force carrier concentrations to their equilibrium values at the contacts.
Default value: IDEAL=TRUE

SPP

If IDEAL=FALSE, the effective hole recombination velocity at the p–type contacts (cm/sec).
Default value: SPP=1.0E7

SNP

If IDEAL=FALSE, the effective electron recombination velocity at the p–type contacts (cm/sec).
Default value: SNP=0.99E7

SNN

If IDEAL=FALSE, the effective electron recombination velocity at the n–type contacts (cm/sec).
Default value: SNN=1.0E7

SPN

If IDEAL=FALSE, the effective hole recombination velocity at the n–type contacts (cm/sec).
Default value: SPN=0.99E7

COMPUTE

The COMPUTE card is used to specify the desired analysis type. The COMPUTE keys are:

TYPE

A character string which specifies the desired computations. Allowed values are:

TYPE=IV:	to compute current–voltage characteristics
TYPE=SCELL:	to simulate a solar cell
TYPE=QE:	to compute the quantum efficiency versus wavelength
TYPE=INTSITY:	to compute current versus solar intensity
TYPE=FET:	to compute field–effect transistor characteristics
TYPE=BIPOLAR:	to compute bipolar transistor characteristics
TYPE=TRANSNT:	to compute transient response characteristics

Default value: TYPE=IV

IV

The IV card is used to specify current–voltage characteristics.
The IV keys are:

VSTART
: The starting bias in volts.
Default value: VSTART=0.0.

VSTOP
: The ending bias in volts.
Default value: VSTOP=1.0.

DV
: The bias increment in volts. The number of biases must not exceed 60.
Default value: DV=0.1

VAPPL(i)
: An array of applied biases. The number of biases must not exceed 60.

SCELL

The SCELL card is used to specify solar cell characteristics.
The SCELL keys are:

VBEGIN
The beginning bias in volts.
Default value: VBEGIN=0.0

DVSMALL
The smallest bias increment in volts.
Default value: DVSMALL=0.03

DVBIG
The largest bias increment in volts.
Default value: DVBIG=0.15

COMPV
A logical variable, when TRUE, computes solutions at the max–power point and open–circuit voltage.
Default value: COMPV=TRUE

RSCELL
The external series resistance (Ω/cm^2).
Default value: RSCELL=0.0

QE

The QE card is used to specify quantum efficiency characteristics. The QE keys are:

VA

The applied bias in volts at which quantum efficiency is desired.
Default value: VA=0.0

JSR

The incident flux multiplied by q (A/cm^2).
Default value: JSR=1.0E-6

LAMBDA(i)

An array of no more than 20 wavelengths (in microns) at which the quantum efficiency is to be computed.
Default value: LAMBDA=.3/.4/.5/.6/.7/.8/.9

INTSITY

The INTSITY card is used to specify current versus solar intensity characteristics.

The INTSITY keys are:

VA

The applied bias in volts.
Default value: VA=0.0

CONC(i)

An array of no more than 20 solar intensities at which the current is to be computed.
Default value: CONC=.1/.3/1./3./10./30./100./300./1000.

FET

The FET card is used to specify field–effect transistor characteristics. The FET keys are:

VDRAIN(i)

An array of applied biases (in volts) at the drain contact while the source contact is held at ground. No more than 20 drain voltages may be applied.

VDSTART

Instead of specifying VDRAIN, the user may increment the drain voltage to which VDSTART (in volts) is the starting drain bias.
Default value: VDSTART=0.0

VDSTOP

The stopping drain bias (in volts) when the drain voltage is incremented.
Default value: VDSTOP=5.0

DVD

The drain to source bias increment (in volts).
Default value: DVD=0.5

VGATE

The bias (in volts) at the gate contact with the source contact held at ground.
Default value: VGATE=0.0

SCONTACT(i)

An array of two values which indicates the position (in microns from x=0.0) of the source contact. The first value specifies the left edge of the source contact. The second value specifies the right edge of the source contact. The contact is positioned on the y=0.0 line.

GCONTACT(i)

An array of two values which indicates the position (in microns from x=0.0) of the gate contact. The first value specifies the left edge of the gate contact. The second value specifies the right edge of the gate contact. The contact is positioned on the y=0.0 line.

DCONTACT(i)

An array of two values which indicates the position (in microns from x=0.0) of the drain contact. The first value specifies the left edge of the drain contact. The second value specifies the right edge of the drain contact. The contact is positioned on the y=0.0 line.

BIPOLAR

The BIPOLAR card is used to specify bipolar transistor characteristics. The BIPOLAR keys are:

VARY

A character string indicating the desired analysis type. If VARY=COLL, then the base–emitter voltage is held constant at VBASE and the collector–emitter voltage is varied from 0.0 to VCOLL. If VARY=BASE, then the collector–emitter voltage is held constant at VCOLL as the base–emitter voltage is varied from VBASE to VBMAX.
Default value: VARY=COLL

SMSIG

If VARY=BASE, the small signal hybrid–pi circuit model parameters may be extracted using quasi–static assumptions. SMSIG is a logical variable which, if true, directs PUPHS2D to perform the quasi–static analysis. Execution time will be significantly increased.
Default value: SMSIG=FALSE

VCOLL

The bias (in volts) at the collector contact with the emitter contact held at ground.
Default value: VCOLL=3.0

DVSMALL

The initial increment in the collector bias (in volts). DVSMALL is a positive quantity.
Default value: DVSMALL=.03

DVBIG

The final increment in the collector bias (in volts). DVBIG is a positive quantity.
Default value: DVBIG=.15

VBASE

The bias (in volts) at the base contact with the emitter contact held at ground.
Default value: VBASE=1.0

VBMAX

The ending bias (in volts) at the base contact for a VARY=BASE analysis.
Default value: VBMAX=1.0

ECONTACT(i)

An array of two values which indicates the position (in microns from x=0.0) of the emitter contact. The first value specifies the left edge of the emitter contact. The second value specifies the right edge of the emitter contact. The contact is positioned on the y=0.0 line.

BCONTACT(i)

An array of two values which indicates the position (in microns from x=0.0) of the base contact. The first value specifies the left edge of the gate contact. The second value specifies the right edge of the gate contact. The contact is positioned on the y=0.0 line.

CCONTACT(i)

An array of two values which indicates the position (in microns from x=0.0) of the collector contact. The first value specifies the left edge of the collector contact. The second value specifies the right edge of the collector contact. The parameter COLLECT determines on which surface the collector resides.

COLLECT

A character string which indicates the surface placement of the collector contact. If COLLECT equals FRONT, then the collector contact is positioned on the y=0.0 line. If COLLECT equals BACK, then the collector contact is positioned on the y=ymax line.
Default value: COLLECT=FRONT

RESTART

A logical variable which, if true, directs PUPHS2D to use the solution from a previous run as the initial guess for the current run. This option is designed for use with the VARY=BASE option, such that an initial simulation is performed and the results saved at VBASE, VCOLL in a dump file named *p2d.dmp_rst* (see the SAVE card). A second run is made with the solution at VBASE, VCOLL used as the initial guess while VBASE is incremented to VBMAX.
Default value: RESTART=FALSE

TRANSNT

The TRANSNT card specifies the parameters for transient analysis. The TRANSNT keys are:

DEVICE

A character variable which specifies the device type to be analyzed. Allowed values are DIODE and BJT. If DEVICE=DIODE, the diode is placed under an initial bias VSTART, the bias is instantaneously stepped to the final bias VSTOP (which may be less or greater than VSTART), and the response is computed. If DEVICE=BJT, the collector bias is set to VCOLL (as specified on the BIPOLAR card, which must still be present to define the contact positions and VCOLL), and the base voltage is set to VSTART. The base voltage is then stepped to VSTOP and the response as a function of time is computed.
Default value: DEVICE=DIODE

LINEAR

A logical variable that, if true, specifies to use the linear time discretisation model. If false, the exponential time discretisation model is used.
Default value: LINEAR=TRUE

VSTART

The initial bias (in volts) on the device as explained above.
Default value: VSTART=0.0

VSTOP

The final bias (in volts) on the device as explained above.
Default value: VSTOP=1.0

DELTAT

The time step (in seconds) used to compute the response. DELTAT must not be too large or the accuracy of the solution will be poor.
Default value: DELTAT=10.0e-12

TSTEPS

The number of time step repetitions for which to compute the transient response. Note: an absurd number of steps will result in an absurd amount of cpu time, especially for large meshes.
Default value: TSTEPS=50

ENERGY

The ENERGY card is used to specify parameters for solution of the electron energy balance equation with the semiconductor equations.

The ENERGY keys are:

UCALC

A logical variable which, when true, directs PUPHS2D to solve an energy balance equation for electrons self–consistently with the drift–diffusion and Poisson equations.

Default value: UCALC=FALSE

UPDIFF

A logical variable which, when true, directs PUPHS2D to update the electron diffusion coefficients based on the solution to the energy balance equation. The electron mobilities are always updated.

Default value: UPDIFF=FALSE

BALCON

The semiconductor equations will converge to a maximum correction of BALCON before the self–consistent solution of the balance equation will begin its first iteration, thereby enhancing stability.

Default value: BALCON=1.0e-3

UMXPCT

UMXPCT*100 is the maximum percent change allowed in the electron energy for self–consistency to be considered to be achieved.

Default value: UMXPCT=0.05

MMXPCT

MMXPCT*100 is the maximum percent change allowed in the electron mobility for self–consistency to be considered to be achieved.

Default value: MMXPCT=0.05

DMXPCT

DMXPCT*100 is the maximum percent change allowed in the electron diffusion coefficient for self–consistency to be considered to be achieved. Default value: DMXPCT=0.10

OPTICAL

The OPTICAL card is used to specify parameters concerning optical generation.

The OPTICAL keys are:

IGEN

A character string which sets the generation rate.
Allowed values are:

IGEN= DARK:	no illumination
IGEN= QE:	QE option only
IGEN= MONO:	monochromatic illumination
IGEN= AM0P0:	am0.0 illumination
IGEN= AM1P0:	am1.0 illumination
IGEN= AM1P5:	am1.5 illumination

Default value: IGEN=DARK

REFL

Relative reflectance of incident light off front surface (assumed uniform across spectrum).
Default value: REFL=0.0

CONCEN

The solar concentration or flux multiplier for monochromatic generation such that the flux is 10^{-6} A/q.
Default value: CONCEN=0.0

SHADOW

An integer which sets the cell shadowing. Allowed values are:

SHADOW= NONE:	no shadowing
SHADOW= CONTACT:	shadowing set by contacts
SHADOW= OTHER:	shadowing set by XSHAD

Default value: SHADOW=CONTACT

XSHAD

If SHADOW=OTHER, then XSHAD (a real value measured in microns) will define a region to be shadowed. If XSHAD is greater than zero, then the region between 0 and XSHAD is shadowed. If XSHAD is less than zero, then the region between ABS(XSHAD) and XMAX is shadowed.
Default value: XSHAD=0.0

BSR

A real fraction which specifies the relative reflectance from the back of the cell. ($0 \leq BSR \leq 1$)
Default value: BSR=0.0

WL

The wavelength for monochromatic generation in microns.
Default value: WL=0.7

PRINT

The PRINT card specifies the desired printed output.
The PRINT keys are:

INFO

An integer variable between 0 and 5 that controls the printing of diagnostic output.
Default value: INFO=5

TABLES

A logical variable that, if true, prints tables of results.
Default value: TABLES=FALSE

NSTEP

An integer which specifies that tables are to be printed at each NSTEPth node in the mesh.
Default value: NSTEP=1

XVERT(i)

An array which specifies the location (in microns from the left edge of the device) of a column of output such as the y–coordinate, doping density, electrostatic potential, etc. ($1 \leq i \leq 5$).
Default value: XVERT(1)=0.0

YHORZ(i)

An array which specifies the location (in microns from the bottom edge of the device) of a row of output such as the x–coordinate, doping density, electrostatic potential, etc. ($1 \leq i \leq 5$).
Default value: YHORZ(1)=0.0

SAVE

The SAVE card is used to store the computed results in an output file. The SAVE keys are:

SAVE

A logical variable which, if true, stores the computed results in an output file.
Default value: SAVE=FALSE

TAG

A character variable used to name the output data file. The output file produced will be named *p2d.dmp_TAG*. If a quasi–static analysis of a bipolar transistor is performed, an output file named *p2d.fdmp_TAG* will also be produced.
Default value: TAG=xxx

REFERENCES

[1] M.S. Lundstrom, S. Datta, R.J. Schuelke, S. Bandyopadhyay, and P. Sorlie, "Physics and Modeling of Heterostructure Semiconductor Devices," Annual Report for Semiconductor Research Corporation, Contract 83-01-001, August, 1984. (Also available as Technical Report TR-EE 84-35, School of Electrical Engineering, Purdue University, West Lafayette, Indiana, 47907.)

[2] M.S. Lundstrom and R.J. Schuelke, "Numerical Simulation of Heterostructure Semiconductor Devices," *IEEE Trans. Electron Devices*, Vol. ED–30, Sept. 1983.

[3] J.L. Gray, "Two–Dimensional Modeling of Silicon Solar Cells," Ph.D. Thesis, Purdue University, West Lafayette, IN, August 1982.

[4] J.L. Gray and M.S. Lundstrom, "Numerical Solution of Poisson's Equation with Application to C–V Analysis of III–V Heterostructure Capacitors," *IEEE Trans. Electron Devices.*, Vol. ED–32, pp. 2102-2109, 1985.

[5] P. D. DeMoulin, "The Physics and Modeling of Gallium Arsenide Solar Cells," Ph.D. Thesis, Purdue University, West Lafayette, IN, June 1988.

[6] P. E. Dodd, "Simulation of Heterojunction Bipolar Transistors in Two Dimensions," M.S. Thesis, Purdue University, West Lafayette, IN, November 1989.

APPENDIX A: DEFAULT INPUT DECK

The default input deck is listed below.

```
*TITLE  DEFAULT INPUT DECK
MESH    NXD=40,NYD=50,XD=10.0,YD=10.0,NODESX=40,NODESY=50
SOLVE   ITMAXQ=120,ITMAX=50,DVMAXQ=1.0e-4,DVMAXQ=1.0e3
+           IDVRG=5,MTEST=0.0,MTMX=3,GUESS=SPLIT,OMEGA=1.5
MATTER  XLL=0.0,YLL=0.0,WX=10.0,WY=10.0,XAL=0.0,UGRADE=FALSE
+          DECFRC=.67
CONTACT     LOCATE=BOTTOM,TYPE=OHMIC,BEGIN=0.0,END=10.0
+      PHIM=5.02,SPP=1.e7,SNP=.99e7,SNN=1.e7,SPN=.99e7,IDEAL=TRUE
DEVICE   TEMP=27.0,XMAX=10.0,YMAX=10.0
DOPING  BEGIN=0.0,END=10.0,PROFILE=UNIFORM,XJ=1.0,SURFACE=0.0
+      PEAK=5.0e18,ZPEAK=1.0,DIRECT=Y+,DOPBLK=0.0,BGN=FALSE
SURFACE  QSSTOP=0.,QSSBOT=0.,QSSRIT=0.,QSSLEF=0., SNTOP=0.
+      SNBOT=0.,SNLEF=0.,SNRIT=0.,SPTOP=0.,SPBOT=0.,SPLEF=0.
+      SPRIT=0.,ETS=0.
LIFETIME   XLL=0.0,YLL=0.0,WX=1.0,WY=1.0,TAUN=1.e-9,TAUP=1.e-9
+       NC=1.0e50,ET=0.,AN=0.21e-28,AP=0.,A0=2.e-10
OPTICAL   IGEN=DARK,REFL=0.,CONCEN=0.,SHADOW=NONE,XSHAD=0.
+       BSR=0.,WL=.7
COMPUTE    TYPE=IV
IV       VSTART=0.,VSTOP=0.,DV=0.1
SCELL   VBEGIN=0.,DVSMALL=.03,DVBIG=.15,COMPV=TRUE,RSCELL=0.
QE     VA=0.,JSR=1.0e-6,LAMBDA=.3/.4/.5/.6/.7/.8/.9
INTSITY   VA=0.,CONC=.1/.3/1./3./10./30./100./300./1000.
FET      VDSTART=0.,VDSTOP=5.0,DVD=.5,VGATE=0.
BIPOLAR    VARY=COLL,SMSIG=FALSE,VCOLL=3.0,DVSMALL=.03,
+       DVBIG=.15,VBASE=1.0,VBMAX=1.0,COLLECT=FRONT
+       RESTART=FALSE
TRANSNT    TYPE=DIODE,LINEAR=TRUE,VSTART=0.0,VSTOP=1.0
+      DELTAT=1.0E-11,TSTEPS=50
PRINT     TABLES=FALSE,INFO=5,NSTEP=1,XVERT=0.0,YHORZ=0.0
SAVE       SAVE=FALSE,TAG=XXX
```

APPENDIX B: EXAMPLE INPUT DECKS

1) Find solar cell characteristics for a p/n heteroface cell. Note that the cards with no keys present are not required but are shown merely to remind the user that default values are assumed.

```
*title   example #1: heteroface solar cell
mesh    nxd=5/10/5,xd=1.5/2.5/4.0,nyd=3/5/6/5/5/30/10/10
+       yd=.09/.0994/.1006/.11/.65/.9/2./20.
+       nodesx=20,nodesy=74
solve    itmaxq=500,dvmaxq=1.e-4,omega=1.5
matter  xll=0./0.,yll=0.0/.1,wx=4./4.
+       wy=.1/19.9,xal=.9/0.,decfrc=.67
contact  locate=top/bottom,type=ohmic/ohmic,begin=0./2.
+       end=4.0/4.0
device   temp=27.,xmax=4.,ymax=20.
doping   begin=0./0.,end=4./4.,dopblk=0.0,xj=.7/19.3
+       surface=0./.7,peak=-5.e18/2.e17
+        direct=y+/y+,profile=uniform/uniform
lifetime xll=0./0./0.,yll=0./.1/.7,wx=4./4./4.,wy=.1/.6/19.3
+       taun=.1e-9/1.e-9/5.e-9,taup=.1e-9/1.e-9/5.e-9
compute  type=scell
scell    vbegin=0.0,dvsmall=.02,dvbig=.04
optical  igen=am1p0,refl=0.,concen=1.,shadow=contact
print
save
```

2) Compute the current–voltage characteristics of a one–dimensional homojunction diode for testing purposes.

```
*title   example #2:  1–d np homojunction diode for testing
mesh    nxd=3 xd=1.
+      nyd=4/25/5 yd=0.0675/0.17/0.325
+       nodesx=3 nodesy=34
solve   itmaxq=800 dvmaxq=1.e-6 omega=1.5 dvmax=1.e-6
matter  xll=0. yll=0.0 wx=1. wy=0.325 xal=0. decfrc=0.67
contact locate=bottom/top type=ohmic/ohmic begin=0./0.
+       end=1./1. ideal=true
device  temp=27. xmax=1. ymax=0.325
doping  begin=0./0. end=1./1. xj=0.075/0.25
+       surface=0./0.075 peak=-1.e19/5.e17  bgn=false
+        direct=y+/y+ profile=uniform/uniform
lifetime xll=0. yll=0. wx=1. wy=0.325
+       taun=1e-9 taup=1e-9 a0=0. an=0.
surface
compute  type=iv
iv       vstart=0.0 vstop=2.0 dv=0.1 smsig=true
optical  igen=dark
print    tables=true info=5 nstep=1 xvert=0. yhorz=0.
save     save=true
```

3) Compute the nonequilibrium solution for a metal–semiconductor field–effect transistor. The gate–source voltage is set at -0.1 volts while the drain–source voltage is incremented from 0.0 to 2.0 volts.

```
*title   example #3: MESFET
mesh    nxd=6/28,xd=1.2/4.,nyd=10/5/5/5
+       yd=.1/.2/.5/1.
+       nodesx=34,nodesy=25
solve    itmaxq=250,dvmaxq=1.e-4,omega=1.5
matter   xll=0.,yll=0.0,wx=4.0
+       wy=1.,xal=0.,decfrc=.67
device   temp=27.,xmax=4.,ymax=1.
doping   begin=0.,end=4.,dopblk=0.0,xj=1.,surface=0.,peak=1.e16
+        direct=y+,profile=uniform
lifetime xll=0.0,yll=0.0,wx=4.0,wy=1.0
+       taun=1.e-9,taup=1.e-9
optical  igen=dark,refl=0.,concen=1.
compute  type=fet
fet      vgate=-.1,vdstart=0.0,vdstop=2.0,dvd=.2,scontact=0./1.
+       gcontact=1.5/2.5,dcontact=3./4.
print
save
```

4) Compute the nonequilibrium solution for an N/p/n heterojunction bipolar transistor. The use of the restart option is illustrated. Part a computes the solution up to V_{BE}=0.7 V, V_{CE}=2.0 V. The solution is then saved. For part b, the solution from part a is read in, then V_{CE} is held at 2.0 V while V_{BE} is varied from 0.7 to 1.5 V. A quasi–static frequency analysis is also requested.

a)

```
*title   example #4a:  hbt with surface recombination
mesh    nodesx=33 nodesy=57 xd=0.95/0.997/1.01/1.21/3.2
+      yd=0.15/0.205/0.226/0.31/0.35/0.67/0.725/0.82
+      nxd=4/3/10/12/4 nyd=5/6/9/5/4/21/4/3
solve    dvmaxq=1e-3 dvmax=1e-4 itmaxq=800 itmax=80
+         idvrg=10
device   xmax=3.2 ymax=0.82
lifetime     xll=0./0.998/1.0/1.0/0. yll=0.0/0.0/0.0/0.22/0.222
+      wx=0.998/0.002/2.2/2.2/3.2
+      wy=0.222/0.222/0.22/0.002/0.598
+      taun=1e-9/2.e-14/1e-15/2.e-14/1.e-9
+      taup=1e-9/2.e-14/1e-15/2.e-14/1.e-9
surface
doping  begin=0./1./1.2/0./0./0. end=1./1.2/3.2/3.2/3.2/3.2
+    profile=uniform/uniform/uniform/uniform/uniform
+  profile=uniform  peak=3e17/0./-5e18/-5e18/5e16/2e18
+  surface=0./0./0./0.22/0.32/0.72  bgn=false
+  xj=0.22/0.22/0.22/0.1/0.4/0.1 direct=y+/y+/y+/y+/y+/y+
matter   ugrade=true
compute  type=bipolar
optical  igen=dark
bipolar  vcoll=2.0 dvsmall=0.06 dvbig=0.20 vbase=0.7 vbmax=1.5
+  vary=coll econtact=0.0/1. bcontact=1.2/3.2 ccontact=0.0/3.2
+  collect=back smsig=false restart=false
print    info=5 xvert=0.3 yhorz=0.0
save     save=true
```

b)

```
*title   example #4b:  hbt with surface recombination
mesh     nodesx=33 nodesy=57 xd=0.95/0.997/1.01/1.21/3.2
+        yd=0.15/0.205/0.226/0.31/0.35/0.67/0.725/0.82
+        nxd=4/3/10/12/4 nyd=5/6/9/5/4/21/4/3
solve    dvmaxq=1e-3 dvmax=1e-4 itmaxq=800 itmax=80 idvrg=10
device   xmax=3.2 ymax=0.82
lifetime xll=0./0.998/1.0/1.0/0. yll=0.0/0.0/0.0/0.22/0.222
+        wx=0.998/0.002/2.2/2.2/3.2
+        wy=0.222/0.222/0.22/0.002/0.598
+        taun=1e-9/2.e-14/1e-15/2.e-14/1.e-9
+        taup=1e-9/2.e-14/1e-15/2.e-14/1.e-9
surface
doping  begin=0./1./1.2/0./0./0. end=1./1.2/3.2/3.2/3.2/3.2
+     profile=uniform/uniform/uniform/uniform/uniform
+  profile=uniform  peak=3e17/0./-5e18/-5e18/5e16/2e18
+  surface=0./0./0./0.22/0.32/0.72 bgn=false
+  xj=0.22/0.22/0.22/0.1/0.4/0.1 direct=y+/y+/y+/y+/y+/y+
matter   ugrade=true
compute  type=bipolar
optical  igen=dark
bipolar  vcoll=2.0 dvsmall=0.06 dvbig=0.20 vbase=0.7 vbmax=1.5
+  vary=base econtact=0.0/1. bcontact=1.2/3.2 ccontact=0.0/3.2
+  collect=back smsig=true restart=true
print    info=5 xvert=0.3 yhorz=0.0
save     save=true
```

5) Compute the nonequilibrium solution for a double heterostructure laser.

```
*title   example #5: double heterostructure laser
mesh    nxd=5/10/5,xd=1.5/2.5/4.0,nyd=5/5/2/2/10/2/2/5/5
+       yd=2./2.19/2.1996/2.2004/2.2096/2.2104/2.22/2.41/4.41
+       nodesx=20,nodesy=38
solve    itmaxq=500,dvmaxq=1.e-2,omega=1.5
matter   ugrade=true
contact  locate=top/bottom,type=ohmic/ohmic,begin=0./2.
+       end=4.0/4.0
device   temp=27.,xmax=4.,ymax=4.41
doping   begin=0./0./0./0.,end=4./4./4./4.,xj=2./.2/.01/2.2
+       surface=0./2./2.2/2.21,peak=-5.e18/-1.e17/5.e16/1.e17
+          profile=uniform/uniform/uniform/uniform
+       direct=y+/y+/y+/y+,
lifetime xll=0./0./0.,yll=0./2.2/2.21,wx=4./4./4.,wy=2.2/0.01/2.2
+       taun=.1e-9/1.e-9/.1e-9,taup=.1e-9/1.e-9/.1e-9
surface
compute  type=iv
iv       vstart=0.0,vstop=1.5,dv=.1
optical  igen=dark
print
save
```

APPENDIX C: EXAMPLE OUTPUT

Example #2: Homojunction diode for testing

Equilibrium Results:

```
                                        ***   TABLE OF COMPUTED RESULTS   ***

                                      COLUMN  NUMBER     1     X= 0.00000E+00

   1 Y=0.0000E+00 HY=1.6875E-06 DOP=-1.00E+19 NI= 2.21E+06 K= 12.8 V=-7.5370E-01 P= 1.00E+19 N= 4.88E-07 RHO=-1.57E+06
   2 Y=1.6875E-06 HY=1.6875E-06 DOP=-1.00E+19 NI= 2.21E+06 K= 12.8 V=-7.5370E-01 P= 1.00E+19 N= 4.88E-07 RHO=-1.07E+11
   3 Y=3.3750E-06 HY=1.6875E-06 DOP=-1.00E+19 NI= 2.21E+06 K= 12.8 V=-7.5370E-01 P= 1.00E+19 N= 4.88E-07 RHO=-1.68E+13
   4 Y=5.0625E-06 HY=1.6875E-06 DOP=-1.00E+19 NI= 2.21E+06 K= 12.8 V=-7.5369E-01 P= 1.00E+19 N= 4.89E-07 RHO=-2.64E+15
   5 Y=6.7500E-06 HY=1.6875E-06 DOP=-1.00E+19 NI= 2.21E+06 K= 12.8 V=-7.5262E-01 P= 9.59E+18 N= 5.09E-07 RHO=-4.07E+17
   6 Y=7.1600E-06 HY=4.1000E-07 DOP=-1.00E+19 NI= 2.21E+06 K= 12.8 V=-7.2774E-01 P= 3.67E+18 N= 1.33E-06 RHO=-6.33E+18
   7 Y=7.5700E-06 HY=4.1000E-07 DOP= 5.00E+17 NI= 2.21E+06 K= 12.8 V=-5.5290E-01 P= 4.25E+15 N= 1.15E-03 RHO= 5.04E+17
   8 Y=7.9800E-06 HY=4.1000E-07 DOP= 5.00E+17 NI= 2.21E+06 K= 12.8 V=-3.9000E-01 P= 7.82E+12 N= 6.25E-01 RHO= 5.00E+17
   9 Y=8.3900E-06 HY=4.1000E-07 DOP= 5.00E+17 NI= 2.21E+06 K= 12.8 V=-2.3893E-01 P= 2.27E+10 N= 2.15E+02 RHO= 5.00E+17
  10 Y=8.8000E-06 HY=4.1000E-07 DOP= 5.00E+17 NI= 2.21E+06 K= 12.8 V=-9.9705E-02 P= 1.04E+08 N= 4.68E+04 RHO= 5.00E+17
  11 Y=9.2100E-06 HY=4.1000E-07 DOP= 5.00E+17 NI= 2.21E+06 K= 12.8 V= 2.7683E-02 P= 7.58E+05 N= 6.45E+06 RHO= 5.00E+17
  12 Y=9.6200E-06 HY=4.1000E-07 DOP= 5.00E+17 NI= 2.21E+06 K= 12.8 V= 1.4323E-01 P= 8.70E+03 N= 5.62E+08 RHO= 5.00E+17
  13 Y=1.0030E-05 HY=4.1000E-07 DOP= 5.00E+17 NI= 2.21E+06 K= 12.8 V= 2.4694E-01 P= 1.58E+02 N= 3.10E+10 RHO= 5.00E+17
  14 Y=1.0440E-05 HY=4.1000E-07 DOP= 5.00E+17 NI= 2.21E+06 K= 12.8 V= 3.3882E-01 P= 4.52E+00 N= 1.08E+12 RHO= 5.00E+17
  15 Y=1.0850E-05 HY=4.1000E-07 DOP= 5.00E+17 NI= 2.21E+06 K= 12.8 V= 4.1885E-01 P= 2.05E-01 N= 2.38E+13 RHO= 5.00E+17
  16 Y=1.1260E-05 HY=4.1000E-07 DOP= 5.00E+17 NI= 2.21E+06 K= 12.8 V= 4.8705E-01 P= 1.47E-02 N= 3.33E+14 RHO= 5.00E+17
  17 Y=1.1670E-05 HY=4.1000E-07 DOP= 5.00E+17 NI= 2.21E+06 K= 12.8 V= 5.4341E-01 P= 1.66E-03 N= 2.94E+15 RHO= 4.97E+17
  18 Y=1.2080E-05 HY=4.1000E-07 DOP= 5.00E+17 NI= 2.21E+06 K= 12.8 V= 5.8801E-01 P= 2.96E-04 N= 1.65E+16 RHO= 4.83E+17
  19 Y=1.2490E-05 HY=4.1000E-07 DOP= 5.00E+17 NI= 2.21E+06 K= 12.8 V= 6.2116E-01 P= 8.21E-05 N= 5.95E+16 RHO= 4.41E+17
  20 Y=1.2900E-05 HY=4.1000E-07 DOP= 5.00E+17 NI= 2.21E+06 K= 12.8 V= 6.4387E-01 P= 3.41E-05 N= 1.43E+17 RHO= 3.57E+17
  21 Y=1.3310E-05 HY=4.1000E-07 DOP= 5.00E+17 NI= 2.21E+06 K= 12.8 V= 6.5814E-01 P= 1.96E-05 N= 2.49E+17 RHO= 2.51E+17
  22 Y=1.3720E-05 HY=4.1000E-07 DOP= 5.00E+17 NI= 2.21E+06 K= 12.8 V= 6.6646E-01 P= 1.42E-05 N= 3.43E+17 RHO= 1.57E+17
  23 Y=1.4130E-05 HY=4.1000E-07 DOP= 5.00E+17 NI= 2.21E+06 K= 12.8 V= 6.7106E-01 P= 1.19E-05 N= 4.10E+17 RHO= 9.03E+16
  24 Y=1.4540E-05 HY=4.1000E-07 DOP= 5.00E+17 NI= 2.21E+06 K= 12.8 V= 6.7353E-01 P= 1.08E-05 N= 4.51E+17 RHO= 4.93E+16
  25 Y=1.4950E-05 HY=4.1000E-07 DOP= 5.00E+17 NI= 2.21E+06 K= 12.8 V= 6.7482E-01 P= 1.03E-05 N= 4.74E+17 RHO= 2.62E+16
  26 Y=1.5360E-05 HY=4.1000E-07 DOP= 5.00E+17 NI= 2.21E+06 K= 12.8 V= 6.7550E-01 P= 1.00E-05 N= 4.86E+17 RHO= 1.37E+16
  27 Y=1.5770E-05 HY=4.1000E-07 DOP= 5.00E+17 NI= 2.21E+06 K= 12.8 V= 6.7585E-01 P= 9.91E-06 N= 4.93E+17 RHO= 7.06E+15
  28 Y=1.6180E-05 HY=4.1000E-07 DOP= 5.00E+17 NI= 2.21E+06 K= 12.8 V= 6.7603E-01 P= 9.84E-06 N= 4.96E+17 RHO= 3.57E+15
  29 Y=1.6590E-05 HY=4.1000E-07 DOP= 5.00E+17 NI= 2.21E+06 K= 12.8 V= 6.7613E-01 P= 9.80E-06 N= 4.98E+17 RHO= 1.68E+15
  30 Y=1.7000E-05 HY=4.1000E-07 DOP= 5.00E+17 NI= 2.21E+06 K= 12.8 V= 6.7619E-01 P= 9.78E-06 N= 4.99E+17 RHO= 5.44E+14
  31 Y=2.0100E-05 HY=3.1000E-06 DOP= 5.00E+17 NI= 2.21E+06 K= 12.8 V= 6.7621E-01 P= 9.77E-06 N= 5.00E+17 RHO= 1.93E+13
  32 Y=2.3200E-05 HY=3.1000E-06 DOP= 5.00E+17 NI= 2.21E+06 K= 12.8 V= 6.7621E-01 P= 9.77E-06 N= 5.00E+17 RHO= 6.87E+11
  33 Y=2.6300E-05 HY=3.1000E-06 DOP= 5.00E+17 NI= 2.21E+06 K= 12.8 V= 6.7621E-01 P= 9.77E-06 N= 5.00E+17 RHO= 2.44E+10
  34 Y=2.9400E-05 HY=3.1000E-06 DOP= 5.00E+17 NI= 2.21E+06 K= 12.8 V= 6.7621E-01 P= 9.77E-06 N= 5.00E+17 RHO= 8.68E+08
  35 Y=3.2500E-05 HY=3.1000E-06 DOP= 5.00E+17 NI= 2.21E+06 K= 12.8 V= 6.7621E-01 P= 9.77E-06 N= 5.00E+17 RHO= 1.84E+05

                                        ***   TABLE OF COMPUTED RESULTS   ***

                                      ROW  NUMBER     1     Y= 0.00000E+00

   1 X=0.0000E+00 HX=3.3333E-05 DOP=-1.00E+19 NI= 2.21E+06 K= 12.8 V=-7.5370E-01 P= 1.00E+19 N= 4.88E-07 RHO=-1.57E+06
   2 X=3.3333E-05 HX=3.3333E-05 DOP=-1.00E+19 NI= 2.21E+06 K= 12.8 V=-7.5370E-01 P= 1.00E+19 N= 4.88E-07 RHO=-1.57E+06
   3 X=6.6667E-05 HX=3.3333E-05 DOP=-1.00E+19 NI= 2.21E+06 K= 12.8 V=-7.5370E-01 P= 1.00E+19 N= 4.88E-07 RHO=-1.57E+06
   4 X=1.0000E-04 HX=3.3333E-05 DOP=-1.00E+19 NI= 2.21E+06 K= 12.8 V=-7.5370E-01 P= 1.00E+19 N= 4.88E-07 RHO=-1.57E+06
1

********************************************** MATERIAL PARAMETERS **********************************************


0LAYER:     1  PROPERTIES

         XAL =      0.000     EG  =      1.422     CHI =      4.070
         NC  =  0.397E+18     NV  =  0.942E+19     NI  =  0.221E+07
         KREL=     12.847

*****************************************************************************************************************
```

Nonequilibrium Results:

********** PUPHS2D **********

APPLIED VOLTAGE (VOLTS)	CURRENT (AMPS/CM^2)	CAPACITANCE (FARADS)
0.00000	-0.21652E-19	0.17887E-10
0.10000	0.22017E-09	0.18583E-10
0.20000	0.15271E-08	0.19360E-10
0.30000	0.14453E-07	0.20239E-10
0.40000	0.15085E-06	0.21247E-10
0.50000	0.12573E-05	0.22422E-10
0.60000	0.78096E-05	0.23820E-10
0.70000	0.47128E-04	0.25525E-10
0.80000	0.37112E-03	0.27679E-10
0.90000	0.41843E-02	0.30535E-10
1.00000	0.76960E-01	0.34624E-10
1.10000	0.25952E+01	0.41524E-10
1.20000	0.11400E+03	0.65967E-10
1.30000	0.50828E+04	0.47409E-09
1.40000	0.15175E+06	0.34706E-08
1.50000	0.15027E+07	0.62811E-08
1.60000	0.48682E+07	0.52616E-08
1.70000	0.90368E+07	0.36346E-08
1.80000	0.13224E+08	0.26435E-08
1.90000	0.17339E+08	0.20447E-08
2.00000	0.21386E+08	0.16334E-08

TEMPERATURE: 27.00 DEG C

********** PUPHS2D **********

PERCENT RECOMBINATION IN EACH REGION

V	J(V)	J(REC)	BOT	TOP	LEFT	RIGHT	SURF	P	N	BMET	TMET	LMET	RMET
0.00000	-0.21652E-19	-0.21652E-19	0.00	0.00	0.00	0.00	0.00	0.00	100.00	0.00	0.00	0.00	0.00
0.10000	0.22017E-09	0.22017E-09	0.00	0.00	0.00	0.00	0.00	0.00	100.00	0.00	0.00	0.00	0.00
0.20000	0.15271E-08	0.15271E-08	0.00	0.00	0.00	0.00	0.00	0.00	100.00	0.00	0.00	0.00	0.00
0.30000	0.14453E-07	0.14453E-07	0.00	0.00	0.00	0.00	0.00	0.00	100.00	0.00	0.00	0.00	0.00
0.40000	0.15085E-06	0.15085E-06	0.00	0.00	0.00	0.00	0.00	0.00	100.00	0.00	0.00	0.00	0.00
0.50000	0.12573E-05	0.12573E-05	0.00	0.00	0.00	0.00	0.00	0.00	99.98	0.01	0.01	0.00	0.00
0.60000	0.78096E-05	0.78096E-05	0.00	0.00	0.00	0.00	0.00	0.00	99.88	0.07	0.05	0.00	0.00
0.70000	0.47128E-04	0.47128E-04	0.00	0.00	0.00	0.00	0.00	0.00	99.02	0.57	0.41	0.00	0.00
0.80000	0.37112E-03	0.37112E-03	0.00	0.00	0.00	0.00	0.00	0.00	94.10	3.45	2.45	0.00	0.00
0.90000	0.41843E-02	0.41843E-02	0.00	0.00	0.00	0.00	0.00	0.01	75.20	14.58	10.21	0.00	0.00
1.00000	0.76960E-01	0.76960E-01	0.00	0.00	0.00	0.00	0.00	0.03	36.19	37.77	26.02	0.00	0.00
1.10000	0.25952E+01	0.25952E+01	0.00	0.00	0.00	0.00	0.00	0.04	10.56	53.34	36.06	0.00	0.00
1.20000	0.11400E+03	0.11400E+03	0.00	0.00	0.00	0.00	0.00	0.04	4.06	57.78	38.12	0.00	0.00
1.30000	0.50828E+04	0.50828E+04	0.00	0.00	0.00	0.00	0.00	0.04	2.36	60.81	36.79	0.00	0.00
1.40000	0.15175E+06	0.15175E+06	0.00	0.00	0.00	0.00	0.00	0.05	0.80	73.96	25.19	0.00	0.00
1.50000	0.15027E+07	0.15027E+07	0.00	0.00	0.00	0.00	0.00	0.04	0.26	85.60	14.10	0.00	0.00
1.60000	0.48682E+07	0.48682E+07	0.00	0.00	0.00	0.00	0.00	0.03	0.13	89.34	10.49	0.00	0.00
1.70000	0.90368E+07	0.90368E+07	0.00	0.00	0.00	0.00	0.00	0.03	0.09	90.65	9.23	0.00	0.00
1.80000	0.13224E+08	0.13224E+08	0.00	0.00	0.00	0.00	0.00	0.02	0.07	91.27	8.64	0.00	0.00
1.90000	0.17339E+08	0.17339E+08	0.00	0.00	0.00	0.00	0.00	0.02	0.06	91.63	8.29	0.00	0.00
2.00000	0.21386E+08	0.21386E+08	0.00	0.00	0.00	0.00	0.00	0.02	0.05	91.88	8.05	0.00	0.00

Example #4: HBT with surface recombination

Equilibrium Results:

*** TABLE OF COMPUTED RESULTS ***

OLUMN NUMBER 2 X= 0.23750E-04

1	Y=0.0000E+00	HY=3.0000E-06	DOP= 3.00E+17	NI= 2.44E+03	K= 11.9	V= 8.9592E-01	P= 1.99E-11	N= 3.00E+17	RHO= 2.74E+05
2	Y=3.0000E-06	HY=3.0000E-06	DOP= 3.00E+17	NI= 2.44E+03	K= 11.9	V= 8.9592E-01	P= 1.99E-11	N= 3.00E+17	RHO= 4.27E+12
3	Y=6.0000E-06	HY=3.0000E-06	DOP= 3.00E+17	NI= 2.44E+03	K= 11.9	V= 8.9592E-01	P= 1.99E-11	N= 3.00E+17	RHO= 7.63E+13
4	Y=9.0000E-06	HY=3.0000E-06	DOP= 3.00E+17	NI= 2.44E+03	K= 11.9	V= 8.9581E-01	P= 2.00E-11	N= 2.99E+17	RHO= 1.36E+15
5	Y=1.2000E-05	HY=3.0000E-06	DOP= 3.00E+17	NI= 2.44E+03	K= 11.9	V= 8.9384E-01	P= 2.15E-11	N= 2.77E+17	RHO= 2.32E+16
6	Y=1.5000E-05	HY=3.0000E-06	DOP= 3.00E+17	NI= 2.44E+03	K= 11.9	V= 8.6008E-01	P= 7.94E-11	N= 7.50E+16	RHO= 2.25E+17
7	Y=1.5917E-05	HY=9.1667E-07	DOP= 3.00E+17	NI= 2.44E+03	K= 11.9	V= 7.8835E-01	P= 1.27E-09	N= 4.69E+15	RHO= 2.95E+17
8	Y=1.6833E-05	HY=9.1667E-07	DOP= 3.00E+17	NI= 2.44E+03	K= 11.9	V= 6.7889E-01	P= 8.76E-08	N= 6.80E+13	RHO= 3.00E+17
9	Y=1.7750E-05	HY=9.1667E-07	DOP= 3.00E+17	NI= 2.44E+03	K= 11.9	V= 5.3110E-01	P= 2.65E-05	N= 2.25E+11	RHO= 3.00E+17
10	Y=1.8667E-05	HY=9.1667E-07	DOP= 3.00E+17	NI= 2.44E+03	K= 11.9	V= 3.4499E-01	P= 3.54E-02	N= 1.68E+08	RHO= 3.00E+17
11	Y=1.9583E-05	HY=9.1667E-07	DOP= 3.00E+17	NI= 8.22E+03	K= 12.1	V= 1.2218E-01	P= 4.78E+02	N= 1.42E+05	RHO= 3.00E+17
12	Y=2.0500E-05	HY=9.1667E-07	DOP= 3.00E+17	NI= 6.66E+04	K= 12.4	V=-1.3379E-01	P= 3.88E+07	N= 1.14E+02	RHO= 3.00E+17
13	Y=2.0733E-05	HY=2.3333E-07	DOP= 3.00E+17	NI= 1.15E+05	K= 12.4	V=-2.0389E-01	P= 8.35E+08	N= 1.57E+01	RHO= 3.00E+17
14	Y=2.0967E-05	HY=2.3333E-07	DOP= 3.00E+17	NI= 1.97E+05	K= 12.5	V=-2.7593E-01	P= 1.94E+10	N= 2.01E+00	RHO= 3.00E+17
15	Y=2.1200E-05	HY=2.3333E-07	DOP= 3.00E+17	NI= 3.40E+05	K= 12.6	V=-3.4991E-01	P= 4.84E+11	N= 2.39E-01	RHO= 3.00E+17
16	Y=2.1433E-05	HY=2.3333E-07	DOP= 3.00E+17	NI= 5.87E+05	K= 12.7	V=-4.2577E-01	P= 1.30E+13	N= 2.64E-02	RHO= 3.00E+17
17	Y=2.1667E-05	HY=2.3333E-07	DOP= 3.00E+17	NI= 1.01E+06	K= 12.7	V=-5.0351E-01	P= 3.77E+14	N= 2.72E-03	RHO= 3.00E+17
18	Y=2.1900E-05	HY=2.3333E-07	DOP= 3.00E+17	NI= 1.75E+06	K= 12.8	V=-5.8310E-01	P= 1.17E+16	N= 2.61E-04	RHO= 3.12E+17
19	Y=2.2133E-05	HY=2.3333E-07	DOP=-5.00E+18	NI= 2.21E+06	K= 12.8	V=-6.6473E-01	P= 3.21E+17	N= 1.52E-05	RHO=-4.68E+18
20	Y=2.2367E-05	HY=2.3333E-07	DOP=-5.00E+18	NI= 2.21E+06	K= 12.8	V=-7.1037E-01	P= 1.87E+18	N= 2.61E-06	RHO=-3.13E+18
21	Y=2.2600E-05	HY=2.3333E-07	DOP=-5.00E+18	NI= 2.21E+06	K= 12.8	V=-7.3203E-01	P= 4.33E+18	N= 1.13E-06	RHO=-6.73E+17
22	Y=2.4280E-05	HY=1.6800E-06	DOP=-5.00E+18	NI= 2.21E+06	K= 12.8	V=-7.3572E-01	P= 4.99E+18	N= 9.79E-07	RHO=-9.16E+15
23	Y=2.5960E-05	HY=1.6800E-06	DOP=-5.00E+18	NI= 2.21E+06	K= 12.8	V=-7.3577E-01	P= 5.00E+18	N= 9.77E-07	RHO=-1.18E+14
24	Y=2.7640E-05	HY=1.6800E-06	DOP=-5.00E+18	NI= 2.21E+06	K= 12.8	V=-7.3577E-01	P= 5.00E+18	N= 9.77E-07	RHO=-1.24E+14
25	Y=2.9320E-05	HY=1.6800E-06	DOP=-5.00E+18	NI= 2.21E+06	K= 12.8	V=-7.3572E-01	P= 4.99E+18	N= 9.79E-07	RHO=-9.69E+15
26	Y=3.1000E-05	HY=1.6800E-06	DOP=-5.00E+18	NI= 2.21E+06	K= 12.8	V=-7.3182E-01	P= 4.29E+18	N= 1.14E-06	RHO=-7.08E+17
27	Y=3.2000E-05	HY=1.0000E-06	DOP= 5.00E+16	NI= 2.21E+06	K= 12.8	V=-5.9581E-01	P= 2.23E+16	N= 2.19E-04	RHO= 7.23E+16
28	Y=3.3000E-05	HY=1.0000E-06	DOP= 5.00E+16	NI= 2.21E+06	K= 12.8	V=-4.6999E-01	P= 1.72E+14	N= 2.84E-02	RHO= 5.02E+16
29	Y=3.4000E-05	HY=1.0000E-06	DOP= 5.00E+16	NI= 2.21E+06	K= 12.8	V=-3.5124E-01	P= 1.75E+12	N= 2.80E+00	RHO= 5.00E+16
30	Y=3.5000E-05	HY=1.0000E-06	DOP= 5.00E+16	NI= 2.21E+06	K= 12.8	V=-2.3953E-01	P= 2.32E+10	N= 2.10E+02	RHO= 5.00E+16
31	Y=3.6524E-05	HY=1.5238E-06	DOP= 5.00E+16	NI= 2.21E+06	K= 12.8	V=-8.2844E-02	P= 5.44E+07	N= 8.98E+04	RHO= 5.00E+16
32	Y=3.8048E-05	HY=1.5238E-06	DOP= 5.00E+16	NI= 2.21E+06	K= 12.8	V= 5.7486E-02	P= 2.39E+05	N= 2.04E+07	RHO= 5.00E+16
33	Y=3.9571E-05	HY=1.5238E-06	DOP= 5.00E+16	NI= 2.21E+06	K= 12.8	V= 1.8146E-01	P= 1.98E+03	N= 2.46E+09	RHO= 5.00E+16
34	Y=4.1095E-05	HY=1.5238E-06	DOP= 5.00E+16	NI= 2.21E+06	K= 12.8	V= 2.8909E-01	P= 3.09E+01	N= 1.58E+11	RHO= 5.00E+16
35	Y=4.2619E-05	HY=1.5238E-06	DOP= 5.00E+16	NI= 2.21E+06	K= 12.8	V= 3.8036E-01	P= 9.07E-01	N= 5.38E+12	RHO= 5.00E+16
36	Y=4.4143E-05	HY=1.5238E-06	DOP= 5.00E+16	NI= 2.21E+06	K= 12.8	V= 4.5528E-01	P= 5.01E-02	N= 9.75E+13	RHO= 4.99E+16
37	Y=4.5667E-05	HY=1.5238E-06	DOP= 5.00E+16	NI= 2.21E+06	K= 12.8	V= 5.1388E-01	P= 5.20E-03	N= 9.40E+14	RHO= 4.91E+16
38	Y=4.7190E-05	HY=1.5238E-06	DOP= 5.00E+16	NI= 2.21E+06	K= 12.8	V= 5.5643E-01	P= 1.00E-03	N= 4.87E+15	RHO= 4.51E+16
39	Y=4.8714E-05	HY=1.5238E-06	DOP= 5.00E+16	NI= 2.21E+06	K= 12.8	V= 5.8423E-01	P= 3.42E-04	N= 1.43E+16	RHO= 3.57E+16
40	Y=5.0238E-05	HY=1.5238E-06	DOP= 5.00E+16	NI= 2.21E+06	K= 12.8	V= 6.0034E-01	P= 1.84E-04	N= 2.66E+16	RHO= 2.34E+16
41	Y=5.1762E-05	HY=1.5238E-06	DOP= 5.00E+16	NI= 2.21E+06	K= 12.8	V= 6.0879E-01	P= 1.32E-04	N= 3.69E+16	RHO= 1.31E+16
42	Y=5.3286E-05	HY=1.5238E-06	DOP= 5.00E+16	NI= 2.21E+06	K= 12.8	V= 6.1296E-01	P= 1.13E-04	N= 4.33E+16	RHO= 6.67E+15
43	Y=5.4810E-05	HY=1.5238E-06	DOP= 5.00E+16	NI= 2.21E+06	K= 12.8	V= 6.1494E-01	P= 1.04E-04	N= 4.68E+16	RHO= 3.21E+15
44	Y=5.6333E-05	HY=1.5238E-06	DOP= 5.00E+16	NI= 2.21E+06	K= 12.8	V= 6.1588E-01	P= 1.01E-04	N= 4.85E+16	RHO= 1.49E+15
45	Y=5.7857E-05	HY=1.5238E-06	DOP= 5.00E+16	NI= 2.21E+06	K= 12.8	V= 6.1633E-01	P= 9.90E-05	N= 4.94E+16	RHO= 6.42E+14
46	Y=5.9381E-05	HY=1.5238E-06	DOP= 5.00E+16	NI= 2.21E+06	K= 12.8	V= 6.1656E-01	P= 9.80E-05	N= 4.98E+16	RHO= 1.85E+14
47	Y=6.0905E-05	HY=1.5238E-06	DOP= 5.00E+16	NI= 2.21E+06	K= 12.8	V= 6.1674E-01	P= 9.74E-05	N= 5.02E+16	RHO=-1.57E+14
48	Y=6.2429E-05	HY=1.5238E-06	DOP= 5.00E+16	NI= 2.21E+06	K= 12.8	V= 6.1697E-01	P= 9.65E-05	N= 5.06E+16	RHO=-6.03E+14
49	Y=6.3952E-05	HY=1.5238E-06	DOP= 5.00E+16	NI= 2.21E+06	K= 12.8	V= 6.1740E-01	P= 9.49E-05	N= 5.14E+16	RHO=-1.44E+15
50	Y=6.5476E-05	HY=1.5238E-06	DOP= 5.00E+16	NI= 2.21E+06	K= 12.8	V= 6.1829E-01	P= 9.17E-05	N= 5.33E+16	RHO=-3.26E+15
51	Y=6.7000E-05	HY=1.5238E-06	DOP= 5.00E+16	NI= 2.21E+06	K= 12.8	V= 6.2026E-01	P= 8.50E-05	N= 5.75E+16	RHO=-7.46E+15
52	Y=6.8375E-05	HY=1.3750E-06	DOP= 5.00E+16	NI= 2.21E+06	K= 12.8	V= 6.2412E-01	P= 7.32E-05	N= 6.67E+16	RHO=-1.67E+16
53	Y=6.9750E-05	HY=1.3750E-06	DOP= 5.00E+16	NI= 2.21E+06	K= 12.8	V= 6.3245E-01	P= 5.31E-05	N= 9.21E+16	RHO=-4.21E+16
54	Y=7.1125E-05	HY=1.3750E-06	DOP= 5.00E+16	NI= 2.21E+06	K= 12.8	V= 6.5197E-01	P= 2.49E-05	N= 1.96E+17	RHO=-1.46E+17
55	Y=7.2500E-05	HY=1.3750E-06	DOP= 2.00E+18	NI= 2.21E+06	K= 12.8	V= 7.1032E-01	P= 2.61E-06	N= 1.87E+18	RHO= 1.31E+17
56	Y=7.5667E-05	HY=3.1667E-06	DOP= 2.00E+18	NI= 2.21E+06	K= 12.8	V= 7.1205E-01	P= 2.44E-06	N= 2.00E+18	RHO= 1.22E+15
57	Y=7.8833E-05	HY=3.1667E-06	DOP= 2.00E+18	NI= 2.21E+06	K= 12.8	V= 7.1207E-01	P= 2.44E-06	N= 2.00E+18	RHO= 1.10E+13
58	Y=8.2000E-05	HY=3.1667E-06	DOP= 2.00E+18	NI= 2.21E+06	K= 12.8	V= 7.1207E-01	P= 2.44E-06	N= 2.00E+18	RHO= 2.46E+05

1 *** TABLE OF COMPUTED RESULTS ***

ROW NUMBER 1 Y= 0.00000E+00

1	X=0.0000E+00	HX=2.3750E-05	DOP= 3.00E+17	NI= 2.44E+03	K= 11.9	V= 8.9592E-01	P= 1.99E-11	N= 3.00E+17	RHO= 2.74E+05
2	X=2.3750E-05	HX=2.3750E-05	DOP= 3.00E+17	NI= 2.44E+03	K= 11.9	V= 8.9592E-01	P= 1.99E-11	N= 3.00E+17	RHO= 2.74E+05
3	X=4.7500E-05	HX=2.3750E-05	DOP= 3.00E+17	NI= 2.44E+03	K= 11.9	V= 8.9592E-01	P= 1.99E-11	N= 3.00E+17	RHO= 2.74E+05
4	X=7.1250E-05	HX=2.3750E-05	DOP= 3.00E+17	NI= 2.44E+03	K= 11.9	V= 8.9592E-01	P= 1.99E-11	N= 3.00E+17	RHO= 2.74E+05
5	X=9.5000E-05	HX=2.3750E-05	DOP= 3.00E+17	NI= 2.44E+03	K= 11.9	V= 8.9592E-01	P= 1.99E-11	N= 3.00E+17	RHO= 2.74E+05
6	X=9.6567E-05	HX=1.5667E-06	DOP= 3.00E+17	NI= 2.44E+03	K= 11.9	V= 8.9592E-01	P= 1.99E-11	N= 3.00E+17	RHO= 2.74E+05
7	X=9.8133E-05	HX=1.5667E-06	DOP= 3.00E+17	NI= 2.44E+03	K= 11.9	V= 8.9592E-01	P= 1.99E-11	N= 3.00E+17	RHO= 2.74E+05
8	X=9.9700E-05	HX=1.5667E-06	DOP= 3.00E+17	NI= 2.44E+03	K= 11.9	V= 8.9592E-01	P= 1.99E-11	N= 3.00E+17	RHO= 2.74E+05
9	X=9.9830E-05	HX=1.3000E-07	DOP= 3.00E+17	NI= 2.44E+03	K= 11.9	V= 8.9592E-01	P= 1.99E-11	N= 3.00E+17	RHO= 2.74E+05
10	X=9.9960E-05	HX=1.3000E-07	DOP= 3.00E+17	NI= 2.44E+03	K= 11.9	V= 8.9592E-01	P= 1.99E-11	N= 3.00E+17	RHO= 2.74E+05
11	X=1.0009E-04	HX=1.3000E-07	DOP= 0.00E+00	NI= 6.05E-10	K= 1.0	V= 8.9395E-01	P= 2.44E-25	N= 1.50E+06	RHO=-1.50E+06
12	X=1.0022E-04	HX=1.3000E-07	DOP= 0.00E+00	NI= 6.05E-10	K= 1.0	V= 8.8126E-01	P= 3.98E-25	N= 9.19E+05	RHO=-9.19E+05
13	X=1.0035E-04	HX=1.3000E-07	DOP= 0.00E+00	NI= 6.05E-10	K= 1.0	V= 8.6859E-01	P= 6.50E-25	N= 5.63E+05	RHO=-5.63E+05
14	X=1.0048E-04	HX=1.3000E-07	DOP= 0.00E+00	NI= 6.05E-10	K= 1.0	V= 8.5593E-01	P= 1.06E-24	N= 3.45E+05	RHO=-3.45E+05
15	X=1.0061E-04	HX=1.3000E-07	DOP= 0.00E+00	NI= 6.05E-10	K= 1.0	V= 8.4329E-01	P= 1.73E-24	N= 2.12E+05	RHO=-2.12E+05
16	X=1.0074E-04	HX=1.3000E-07	DOP= 0.00E+00	NI= 6.05E-10	K= 1.0	V= 8.3066E-01	P= 2.82E-24	N= 1.30E+05	RHO=-1.30E+05
17	X=1.0087E-04	HX=1.3000E-07	DOP= 0.00E+00	NI= 6.05E-10	K= 1.0	V= 8.1805E-01	P= 4.59E-24	N= 7.98E+04	RHO=-7.98E+04
18	X=1.0100E-04	HX=1.3000E-07	DOP= 0.00E+00	NI= 6.05E-10	K= 1.0	V= 8.0546E-01	P= 7.46E-24	N= 4.90E+04	RHO=-4.90E+04
19	X=1.0267E-04	HX=1.6667E-06	DOP= 0.00E+00	NI= 6.05E-10	K= 1.0	V= 6.4547E-01	P= 3.63E-21	N= 1.01E+02	RHO=-1.01E+02

```
20 X=1.0433E-04 HX=1.6667E-06 DOP= 0.00E+00 NI= 6.05E-10 K=  1.0 V= 4.8881E-01 P= 1.55E-18 N= 2.36E-01 RHO=-2.36E-01
21 X=1.0600E-04 HX=1.6667E-06 DOP= 0.00E+00 NI= 6.05E-10 K=  1.0 V= 3.3638E-01 P= 5.61E-16 N= 6.52E-04 RHO=-6.52E-04
22 X=1.0767E-04 HX=1.6667E-06 DOP= 0.00E+00 NI= 6.05E-10 K=  1.0 V= 1.8887E-01 P= 1.68E-13 N= 2.17E-06 RHO=-2.17E-06
23 X=1.0933E-04 HX=1.6667E-06 DOP= 0.00E+00 NI= 6.05E-10 K=  1.0 V= 4.6621E-02 P= 4.12E-11 N= 8.88E-09 RHO=-8.84E-09
24 X=1.1100E-04 HX=1.6667E-06 DOP= 0.00E+00 NI= 6.05E-10 K=  1.0 V=-9.0412E-02 P= 8.24E-09 N= 4.44E-11 RHO= 8.19E-09
25 X=1.1267E-04 HX=1.6667E-06 DOP= 0.00E+00 NI= 6.05E-10 K=  1.0 V=-2.2259E-01 P= 1.37E-06 N= 2.68E-13 RHO= 1.37E-06
26 X=1.1433E-04 HX=1.6667E-06 DOP= 0.00E+00 NI= 6.05E-10 K=  1.0 V=-3.5056E-01 P= 1.92E-04 N= 1.90E-15 RHO= 1.92E-04
27 X=1.1600E-04 HX=1.6667E-06 DOP= 0.00E+00 NI= 6.05E-10 K=  1.0 V=-4.7517E-01 P= 2.38E-02 N= 1.54E-17 RHO= 2.38E-02
28 X=1.1767E-04 HX=1.6667E-06 DOP= 0.00E+00 NI= 6.05E-10 K=  1.0 V=-5.9739E-01 P= 2.68E+00 N= 1.36E-19 RHO= 2.68E+00
29 X=1.1933E-04 HX=1.6667E-06 DOP= 0.00E+00 NI= 6.05E-10 K=  1.0 V=-7.1832E-01 P= 2.88E+02 N= 1.27E-21 RHO= 2.88E+02
30 X=1.2100E-04 HX=1.6667E-06 DOP=-5.00E+18 NI= 2.21E+06 K= 12.8 V=-7.3577E-01 P= 5.00E+18 N= 9.77E-07 RHO=-1.84E+06
31 X=1.7075E-04 HX=4.9750E-05 DOP=-5.00E+18 NI= 2.21E+06 K= 12.8 V=-7.3577E-01 P= 5.00E+18 N= 9.77E-07 RHO=-1.84E+06
32 X=2.2050E-04 HX=4.9750E-05 DOP=-5.00E+18 NI= 2.21E+06 K= 12.8 V=-7.3577E-01 P= 5.00E+18 N= 9.77E-07 RHO=-1.84E+06
33 X=2.7025E-04 HX=4.9750E-05 DOP=-5.00E+18 NI= 2.21E+06 K= 12.8 V=-7.3577E-01 P= 5.00E+18 N= 9.77E-07 RHO=-1.84E+06
34 X=3.2000E-04 HX=4.9750E-05 DOP=-5.00E+18 NI= 2.21E+06 K= 12.8 V=-7.3577E-01 P= 5.00E+18 N= 9.77E-07 RHO=-1.84E+06
```

*** GENERATION-RECOMBINATION RATE ***

X-MESH LINE NUMBER 3 X=0.475000E-04

```
 1 Y=0.0000E+00 HY=0.3000E-05 DOP=0.3000E+18 G=0.0000E+00 R=-.2905E-14 TAUN= 0.1000E-08 TAUP= 0.1000E-08
 2 Y=0.3000E-05 HY=0.3000E-05 DOP=0.3000E+18 G=0.0000E+00 R=0.7979E-11 TAUN= 0.1000E-08 TAUP= 0.1000E-08
 3 Y=0.6000E-05 HY=0.3000E-05 DOP=0.3000E+18 G=0.0000E+00 R=0.1187E-10 TAUN= 0.1000E-08 TAUP= 0.1000E-08
 4 Y=0.9000E-05 HY=0.3000E-05 DOP=0.3000E+18 G=0.0000E+00 R=0.1576E-10 TAUN= 0.1000E-08 TAUP= 0.1000E-08
 5 Y=0.1200E-04 HY=0.3000E-05 DOP=0.3000E+18 G=0.0000E+00 R=0.2089E-10 TAUN= 0.1000E-08 TAUP= 0.1000E-08
 6 Y=0.1500E-04 HY=0.3000E-05 DOP=0.3000E+18 G=0.0000E+00 R=0.8527E-10 TAUN= 0.1000E-08 TAUP= 0.1000E-08
 7 Y=0.1592E-04 HY=0.9167E-06 DOP=0.3000E+18 G=0.0000E+00 R=0.1366E-08 TAUN= 0.1000E-08 TAUP= 0.1000E-08
 8 Y=0.1683E-04 HY=0.9167E-06 DOP=0.3000E+18 G=0.0000E+00 R=0.9403E-07 TAUN= 0.1000E-08 TAUP= 0.1000E-08
 9 Y=0.1775E-04 HY=0.9167E-06 DOP=0.3000E+18 G=0.0000E+00 R=0.2850E-04 TAUN= 0.1000E-08 TAUP= 0.1000E-08
10 Y=0.1867E-04 HY=0.9167E-06 DOP=0.3000E+18 G=0.0000E+00 R=0.3801E-01 TAUN= 0.1000E-08 TAUP= 0.1000E-08
11 Y=0.1958E-04 HY=0.9167E-06 DOP=0.3000E+18 G=0.0000E+00 R=0.4582E+03 TAUN= 0.1000E-08 TAUP= 0.1000E-08
12 Y=0.2050E-04 HY=0.9167E-06 DOP=0.3000E+18 G=0.0000E+00 R=0.1224E+03 TAUN= 0.1000E-08 TAUP= 0.1000E-08
13 Y=0.2073E-04 HY=0.2333E-06 DOP=0.3000E+18 G=0.0000E+00 R=0.1689E+02 TAUN= 0.1000E-08 TAUP= 0.1000E-08
14 Y=0.2097E-04 HY=0.2333E-06 DOP=0.3000E+18 G=0.0000E+00 R=0.2160E+01 TAUN= 0.1000E-08 TAUP= 0,1000E-08
15 Y=0.2120E-04 HY=0.2333E-06 DOP=0.3000E+18 G=0.0000E+00 R=0.2568E+00 TAUN= 0.1000E-08 TAUP= 0.1000E-08
16 Y=0.2143E-04 HY=0.2333E-06 DOP=0.3000E+18 G=0.0000E+00 R=0.2840E-01 TAUN= 0.1000E-08 TAUP= 0.1000E-08
17 Y=0.2167E-04 HY=0.2333E-06 DOP=0.3000E+18 G=0.0000E+00 R=0.2924E-02 TAUN= 0.1000E-08 TAUP= 0.1000E-08
18 Y=0.2190E-04 HY=0.2333E-06 DOP=0.3000E+18 G=0.0000E+00 R=0.2811E-03 TAUN= 0.1000E-08 TAUP= 0.1000E-08
19 Y=0.2213E-04 HY=0.2333E-06 DOP=-.5000E+19 G=0.0000E+00 R=0.1741E-04 TAUN= 0.1000E-08 TAUP= 0.1000E-08
20 Y=0.2237E-04 HY=0.2333E-06 DOP=-.5000E+19 G=0.0000E+00 R=0.3849E-05 TAUN= 0.1000E-08 TAUP= 0.1000E-08
21 Y=0.2260E-04 HY=0.2333E-06 DOP=-.5000E+19 G=0.0000E+00 R=0.2257E-05 TAUN= 0.1000E-08 TAUP= 0.1000E-08
22 Y=0.2428E-04 HY=0.1680E-05 DOP=-.5000E+19 G=0.0000E+00 R=0.2059E-05 TAUN= 0.1000E-08 TAUP= 0.1000E-08
23 Y=0.2596E-04 HY=0.1680E-05 DOP=-.5000E+19 G=0.0000E+00 R=0.2013E-05 TAUN= 0.1000E-08 TAUP= 0.1000E-08
24 Y=0.2764E-04 HY=0.1680E-05 DOP=-.5000E+19 G=0.0000E+00 R=0.1970E-05 TAUN= 0.1000E-08 TAUP= 0.1000E-08
25 Y=0.2932E-04 HY=0.1680E-05 DOP=-.5000E+19 G=0.0000E+00 R=0.1924E-05 TAUN= 0.1000E-08 TAUP= 0.1000E-08
26 Y=0.3100E-04 HY=0.1680E-05 DOP=-.5000E+19 G=0.0000E+00 R=0.2032E-05 TAUN= 0.1000E-08 TAUP= 0.1000E-08
27 Y=0.3200E-04 HY=0.1000E-05 DOP=0.5000E+17 G=0.0000E+00 R=0.2108E-03 TAUN= 0.1000E-08 TAUP= 0.1000E-08
28 Y=0.3300E-04 HY=0.1000E-05 DOP=0.5000E+17 G=0.0000E+00 R=0.2720E-01 TAUN= 0.1000E-08 TAUP= 0.1000E-08
29 Y=0.3400E-04 HY=0.1000E-05 DOP=0.5000E+17 G=0.0000E+00 R=0.2682E+01 TAUN= 0.1000E-08 TAUP= 0.1000E-08
30 Y=0.3500E-04 HY=0.1000E-05 DOP=0.5000E+17 G=0.0000E+00 R=0.2014E+03 TAUN= 0.1000E-08 TAUP= 0.1000E-08
31 Y=0.3652E-04 HY=0.1524E-05 DOP=0.5000E+17 G=0.0000E+00 R=0.7951E+05 TAUN= 0.1000E-08 TAUP= 0.1000E-08
32 Y=0.3805E-04 HY=0.1524E-05 DOP=0.5000E+17 G=0.0000E+00 R=0.1869E+06 TAUN= 0.1000E-08 TAUP= 0.1000E-08
33 Y=0.3957E-04 HY=0.1524E-05 DOP=0.5000E+17 G=0.0000E+00 R=0.1898E+04 TAUN= 0.1000E-08 TAUP= 0.1000E-08
34 Y=0.4110E-04 HY=0.1524E-05 DOP=0.5000E+17 G=0.0000E+00 R=0.2964E+02 TAUN= 0.1000E-08 TAUP= 0.1000E-08
35 Y=0.4262E-04 HY=0.1524E-05 DOP=0.5000E+17 G=0.0000E+00 R=0.8695E+00 TAUN= 0.1000E-08 TAUP= 0.1000E-08
36 Y=0.4414E-04 HY=0.1524E-05 DOP=0.5000E+17 G=0.0000E+00 R=0.4801E-01 TAUN= 0.1000E-08 TAUP= 0.1000E-08
37 Y=0.4567E-04 HY=0.1524E-05 DOP=0.5000E+17 G=0.0000E+00 R=0.4982E-02 TAUN= 0.1000E-08 TAUP= 0.1000E-08
38 Y=0.4719E-04 HY=0.1524E-05 DOP=0.5000E+17 G=0.0000E+00 R=0.9620E-03 TAUN= 0.1000E-08 TAUP= 0.1000E-08
39 Y=0.4871E-04 HY=0.1524E-05 DOP=0.5000E+17 G=0.0000E+00 R=0.3289E-03 TAUN= 0.1000E-08 TAUP= 0.1000E-08
40 Y=0.5024E-04 HY=0.1524E-05 DOP=0.5000E+17 G=0.0000E+00 R=0.1767E-03 TAUN= 0.1000E-08 TAUP= 0.1000E-08
41 Y=0.5176E-04 HY=0.1524E-05 DOP=0.5000E+17 G=0.0000E+00 R=0.1275E-03 TAUN= 0.1000E-08 TAUP= 0.1000E-08
42 Y=0.5329E-04 HY=0.1524E-05 DOP=0.5000E+17 G=0.0000E+00 R=0.1087E-03 TAUN= 0.1000E-08 TAUP= 0.1000E-08
43 Y=0.5481E-04 HY=0.1524E-05 DOP=0.5000E+17 G=0.0000E+00 R=0.1007E-03 TAUN= 0.1000E-08 TAUP= 0.1000E-08
44 Y=0.5633E-04 HY=0.1524E-05 DOP=0.5000E+17 G=0.0000E+00 R=0.9722E-04 TAUN= 0.1000E-08 TAUP= 0.1000E-08
45 Y=0.5786E-04 HY=0.1524E-05 DOP=0.5000E+17 G=0.0000E+00 R=0.9560E-04 TAUN= 0.1000E-08 TAUP= 0.1000E-08
46 Y=0.5938E-04 HY=0.1524E-05 DOP=0.5000E+17 G=0.0000E+00 R=0.9476E-04 TAUN= 0.1000E-08 TAUP= 0.1000E-08
47 Y=0.6090E-04 HY=0.1524E-05 DOP=0.5000E+17 G=0.0000E+00 R=0.9413E-04 TAUN= 0.1000E-08 TAUP= 0.1000E-08
48 Y=0.6243E-04 HY=0.1524E-05 DOP=0.5000E+17 G=0.0000E+00 R=0.9329E-04 TAUN= 0.1000E-08 TAUP= 0.1000E-08
49 Y=0.6395E-04 HY=0.1524E-05 DOP=0.5000E+17 G=0.0000E+00 R=0.9174E-04 TAUN= 0.1000E-08 TAUP= 0.1000E-08
50 Y=0.6548E-04 HY=0.1524E-05 DOP=0.5000E+17 G=0.0000E+00 R=0.8855E-04 TAUN= 0.1000E-08 TAUP= 0.1000E-08
51 Y=0.6700E-04 HY=0.1524E-05 DOP=0.5000E+17 G=0.0000E+00 R=0.8201E-04 TAUN= 0.1000E-08 TAUP= 0.1000E-08
52 Y=0.6837E-04 HY=0.1375E-05 DOP=0.5000E+17 G=0.0000E+00 R=0.7055E-04 TAUN= 0.1000E-08 TAUP= 0.1000E-08
53 Y=0.6975E-04 HY=0.1375E-05 DOP=0.5000E+17 G=0.0000E+00 R=0.5108E-04 TAUN= 0.1000E-08 TAUP= 0.1000E-08
54 Y=0.7112E-04 HY=0.1375E-05 DOP=0.5000E+17 G=0.0000E+00 R=0.2400E-04 TAUN= 0.1000E-08 TAUP= 0.1000E-08
55 Y=0.7250E-04 HY=0.1375E-05 DOP=0.2000E+19 G=0.0000E+00 R=0.2652E-05 TAUN= 0.1000E-08 TAUP= 0.1000E-08
56 Y=0.7567E-04 HY=0.3167E-05 DOP=0.2000E+19 G=0.0000E+00 R=0.1662E-05 TAUN= 0.1000E-08 TAUP= 0.1000E-08
57 Y=0.7883E-04 HY=0.3167E-05 DOP=0.2000E+19 G=0.0000E+00 R=0.7897E-06 TAUN= 0.1000E-08 TAUP= 0.1000E-08
58 Y=0.8200E-04 HY=0.3167E-05 DOP=0.2000E+19 G=0.0000E+00 R=-.1544E-09 TAUN= 0.1000E-08 TAUP= 0.1000E-08
```

*** GENERATION-RECOMBINATION RATE ***

Y-MESH LINE NUMBER 1 Y=0.000000E+00

```
 1 X=0.0000E+00 HX=0.2375E-04 DOP=0.3000E+18 G=0.0000E+00 R=-.2905E-14 TAUN= 0.1000E-08 TAUP= 0.1000E-08
 2 X=0.2375E-04 HX=0.2375E-04 DOP=0.3000E+18 G=0.0000E+00 R=-.2905E-14 TAUN= 0.1000E-08 TAUP= 0.1000E-08
 3 X=0.4750E-04 HX=0.2375E-04 DOP=0.3000E+18 G=0.0000E+00 R=-.2905E-14 TAUN= 0.1000E-08 TAUP= 0.1000E-08
 4 X=0.7125E-04 HX=0.2375E-04 DOP=0.3000E+18 G=0.0000E+00 R=-.2905E-14 TAUN= 0.1000E-08 TAUP= 0.1000E-08
 5 X=0.9500E-04 HX=0.2375E-04 DOP=0.3000E+18 G=0.0000E+00 R=-.2905E-14 TAUN= 0.1000E-08 TAUP= 0.1000E-08
 6 X=0.9657E-04 HX=0.1567E-05 DOP=0.3000E+18 G=0.0000E+00 R=-.2905E-14 TAUN= 0.1000E-08 TAUP= 0.1000E-08
 7 X=0.9813E-04 HX=0.1567E-05 DOP=0.3000E+18 G=0.0000E+00 R=-.2905E-14 TAUN= 0.1000E-08 TAUP= 0.1000E-08
 8 X=0.9970E-04 HX=0.1567E-05 DOP=0.3000E+18 G=0.0000E+00 R=-.2905E-14 TAUN= 0.1000E-08 TAUP= 0.1000E-08
 9 X=0.9983E-04 HX=0.1300E-06 DOP=0.3000E+18 G=0.0000E+00 R=-.1434E-09 TAUN= 0.2000E-13 TAUP= 0.2000E-13
10 X=0.9996E-04 HX=0.1300E-06 DOP=0.3000E+18 G=0.0000E+00 R=-.1434E-09 TAUN= 0.2000E-13 TAUP= 0.2000E-13
11 X=0.1001E-03 HX=0.1300E-06 DOP=0.0000E+00 G=0.0000E+00 R=-.2097E-21 TAUN= 0.1000E-14 TAUP= 0.1000E-14
12 X=0.1002E-03 HX=0.1300E-06 DOP=0.0000E+00 G=0.0000E+00 R=-.6740E-21 TAUN= 0.1000E-14 TAUP= 0.1000E-14
13 X=0.1003E-03 HX=0.1300E-06 DOP=0.0000E+00 G=0.0000E+00 R=-.1100E-20 TAUN= 0.1000E-14 TAUP= 0.1000E-14
14 X=0.1005E-03 HX=0.1300E-06 DOP=0.0000E+00 G=0.0000E+00 R=-.2112E-20 TAUN= 0.1000E-14 TAUP= 0.1000E-14
15 X=0.1006E-03 HX=0.1300E-06 DOP=0.0000E+00 G=0.0000E+00 R=-.3605E-20 TAUN= 0.1000E-14 TAUP= 0.1000E-14
16 X=0.1007E-03 HX=0.1300E-06 DOP=0.0000E+00 G=0.0000E+00 R=-.7349E-20 TAUN= 0.1000E-14 TAUP= 0.1000E-14
17 X=0.1009E-03 HX=0.1300E-06 DOP=0.0000E+00 G=0.0000E+00 R=-.1287E-19 TAUN= 0.1000E-14 TAUP= 0.1000E-14
```

```
 18 X=0.1010E-03  HX=0.1300E-06  DOP=0.0000E+00  G=0.0000E+00  R=-.1082E-19  TAUN=    0.1000E-14  TAUP=    0.1000E-14
 19 X=0.1027E-03  HX=0.1667E-05  DOP=0.0000E+00  G=0.0000E+00  R=-.4340E-17  TAUN=    0.1000E-14  TAUP=    0.1000E-14
 20 X=0.1043E-03  HX=0.1667E-05  DOP=0.0000E+00  G=0.0000E+00  R=-.1636E-14  TAUN=    0.1000E-14  TAUP=    0.1000E-14
 21 X=0.1060E-03  HX=0.1667E-05  DOP=0.0000E+00  G=0.0000E+00  R=-.5304E-12  TAUN=    0.1000E-14  TAUP=    0.1000E-14
 22 X=0.1077E-03  HX=0.1667E-05  DOP=0.0000E+00  G=0.0000E+00  R=-.1385E-09  TAUN=    0.1000E-14  TAUP=    0.1000E-14
 23 X=0.1093E-03  HX=0.1667E-05  DOP=0.0000E+00  G=0.0000E+00  R=0.6822E-07  TAUN=    0.1000E-14  TAUP=    0.1000E-14
 24 X=0.1110E-03  HX=0.1667E-05  DOP=0.0000E+00  G=0.0000E+00  R=0.1709E-06  TAUN=    0.1000E-14  TAUP=    0.1000E-14
 25 X=0.1127E-03  HX=0.1667E-05  DOP=0.0000E+00  G=0.0000E+00  R=0.2504E-10  TAUN=    0.1000E-14  TAUP=    0.1000E-14
 26 X=0.1143E-03  HX=0.1667E-05  DOP=0.0000E+00  G=0.0000E+00  R=0.1423E-12  TAUN=    0.1000E-14  TAUP=    0.1000E-14
 27 X=0.1160E-03  HX=0.1667E-05  DOP=0.0000E+00  G=0.0000E+00  R=0.1582E-14  TAUN=    0.1000E-14  TAUP=    0.1000E-14
 28 X=0.1177E-03  HX=0.1667E-05  DOP=0.0000E+00  G=0.0000E+00  R=0.1658E-16  TAUN=    0.1000E-14  TAUP=    0.1000E-14
 29 X=0.1193E-03  HX=0.1667E-05  DOP=0.0000E+00  G=0.0000E+00  R=-.5348E-18  TAUN=    0.1000E-14  TAUP=    0.1000E-14
 30 X=0.1210E-03  HX=0.1667E-05  DOP=-.5000E+19  G=0.0000E+00  R=-.1388E-04  TAUN=    0.1000E-14  TAUP=    0.1000E-14
 31 X=0.1707E-03  HX=0.4975E-04  DOP=-.5000E+19  G=0.0000E+00  R=-.1388E-04  TAUN=    0.1000E-14  TAUP=    0.1000E-14
 32 X=0.2205E-03  HX=0.4975E-04  DOP=-.5000E+19  G=0.0000E+00  R=-.1388E-04  TAUN=    0.1000E-14  TAUP=    0.1000E-14
 33 X=0.2702E-03  HX=0.4975E-04  DOP=-.5000E+19  G=0.0000E+00  R=-.1388E-04  TAUN=    0.1000E-14  TAUP=    0.1000E-14
 34 X=0.3200E-03  HX=0.4975E-04  DOP=-.5000E+19  G=0.0000E+00  R=-.1388E-04  TAUN=    0.1000E-14  TAUP=    0.1000E-14

    ************************************************** PROBLEM SUMMARY**************************************************

DATE:       TIME:

PROBLEM TITLE:    EX 4B: HBT WITH SURFACE RECOMBINATION

KT/Q= 2.58641E-02  NI(GAAS)= 2.21001E+06  TEMP=     300.150 KELVIN

DEVICE WIDTH= 3.20000E+00  DEVICE THICKNESS= 8.20000E-01

BULK DOPING DENSITY =   0.000E+00 PER CM3

MAXIMUM CHANGE IN POTENTIAL BETWEEN NODES IN THE X-DIRECTION:    10.32927 (IN UNITS OF KT/Q) AT GRIDLINE  18

MAXIMUM CHANGE IN POTENTIAL BETWEEN NODES IN THE Y-DIRECTION:     9.89690 (IN UNITS OF KT/Q) AT GRIDLINE  11

MAXIMUM CHANGE IN RECOMBINATION RATE BETWEEN NODES IN THE X-DIRECTION:   0.27136E+09 (IN UNITS OF CM**-3/S) AT GRIDLINE   8

MAXIMUM CHANGE IN RECOMBINATION RATE BETWEEN NODES IN THE Y-DIRECTION:   0.27133E+09 (IN UNITS OF CM**-3/S) AT GRIDLINE  10

MAXIMUM CHANGE IN E-FIELD BETWEEN NODES IN THE X-DIRECTION:      0.19265E+07 (IN UNITS OF VOLTS/CM) AT GRIDLINE  18

MAXIMUM CHANGE IN E-FIELD BETWEEN NODES IN THE Y-DIRECTION:      0.39826E+06 (IN UNITS OF VOLTS/CM) AT GRIDLINE  11

MAXIMUM CHANGE IN CHARGE DENSITY BETWEEN NODES IN THE X-DIRECTION:    0.13818E+00 (IN UNITS OF COUL/CM**3) AT GRIDLINE  11

MAXIMUM CHANGE IN CHARGE DENSITY BETWEEN NODES IN THE Y-DIRECTION:    0.79961E+00 (IN UNITS OF COUL/CM**3) AT GRIDLINE  18

   34 NODES IN X-DIRECTION        58 NODES IN Y-DIRECTION

RELAXATION FACTOR=     1.500
MAXIMUM ALLOWED CHANGE IN V= 0.100E-02

NUMBER OF EXPONENTIAL UNDERFLOWS:       0

*****************************************************************************************************************************
```

Nonequilibrium Results:

******** PUPHS2D ********

VCE = 2.000

VBE (VOLTS)	COLLECTOR CURRENT (AMPS/CM)	BASE CURRENT (AMPS/CM)	EMITTER CURRENT (AMPS/CM)	BETA
0.70000	0.18434E-09	0.90889E-08	0.90983E-08	0.02
0.75000	0.37052E-09	0.29422E-07	0.29525E-07	0.01
0.80000	0.88739E-09	0.85221E-07	0.85949E-07	0.01
0.85000	0.52738E-08	0.24639E-06	0.25147E-06	0.02
0.90000	0.35323E-07	0.74432E-06	0.77940E-06	0.05
0.95000	0.24239E-06	0.23346E-05	0.25766E-05	0.10
1.00000	0.16697E-05	0.77086E-05	0.93780E-05	0.22
1.05000	0.11513E-04	0.26226E-04	0.37738E-04	0.44
1.10000	0.79350E-04	0.91978E-04	0.17133E-03	0.86
1.15000	0.54611E-03	0.33466E-03	0.88076E-03	1.63
1.20000	0.37383E-02	0.12595E-02	0.49978E-02	2.97
1.25000	0.25039E-01	0.48974E-02	0.29937E-01	5.11
1.30000	0.15355E+00	0.18580E-01	0.17213E+00	8.26
1.35000	0.72089E+00	0.58403E-01	0.77929E+00	12.34
1.40000	0.21987E+01	0.13201E+00	0.23307E+01	16.66
1.45000	0.46286E+01	0.22731E+00	0.48559E+01	20.36
1.50000	0.77480E+01	0.33208E+00	0.80801E+01	23.33

* CURRENT CONSERVATION INFORMATION *

VCE = 2.000

VBE (VOLTS)	RESIDUAL (AMPS/CM)
0.70000	0.17494E-09
0.75000	0.26784E-09
0.80000	0.15931E-09
0.85000	0.19911E-09
0.90000	0.24483E-09
0.95000	0.37471E-09
1.00000	0.30245E-09
1.05000	0.26396E-09
1.10000	0.25847E-09
1.15000	0.22882E-09
1.20000	0.29835E-09
1.25000	0.27346E-09
1.30000	0.27470E-09
1.35000	0.26010E-09
1.40000	0.34132E-09
1.45000	0.29303E-09
1.50000	0.37301E-09

******** PUPHS2D ********

VCE = 2.000

VBE (VOLTS)	FT (GHZ)	GM (MHOS)	RPI (OHMS)	RO (OHMS)	CPI (FARADS/CM)	CMU (FARADS/CM)
0.70000	0.000000	0.4764E-07	0.4165E+07	-0.2081E+08	0.3211E-10	0.1226E-10
0.75000	0.000000	0.1139E-07	0.1464E+07	-0.1175E+09	0.3191E-10	0.1238E-10
0.80000	0.000000	0.4235E-07	0.5322E+06	-0.6926E+08	0.3163E-10	0.1250E-10
0.85000	-0.000001	0.2469E-06	0.1766E+06	-0.4206E+08	0.3134E-10	0.1263E-10
0.90000	-0.000005	0.1469E-05	0.5645E+05	0.4761E+08	0.3113E-10	0.1276E-10
0.95000	-0.000037	0.1031E-04	0.1723E+05	-0.7968E+09	0.3108E-10	0.1289E-10
1.00000	-0.000255	0.7112E-04	0.5017E+04	0.5605E+08	0.3135E-10	0.1303E-10
1.05000	-0.001719	0.4904E-03	0.1448E+04	0.1109E+08	0.3224E-10	0.1317E-10
1.10000	-0.011250	0.3378E-02	0.3988E+03	0.1731E+07	0.3447E-10	0.1332E-10
1.15000	-0.069464	0.2321E-01	0.1070E+03	0.2362E+06	0.3971E-10	0.1347E-10
1.20000	-0.388463	0.1579E+00	0.2751E+02	0.3419E+05	0.5108E-10	0.1363E-10
1.25000	-1.909215	0.1031E+01	0.7003E+01	0.5170E+04	0.7217E-10	0.1380E-10
1.30000	-7.610016	0.5710E+01	0.1993E+01	0.9197E+03	0.1054E-09	0.1398E-10
1.35000	-19.618308	0.2030E+02	0.8426E+00	0.2501E+03	0.1505E-09	0.1420E-10
1.40000	31.413469	0.4076E+02	0.5675E+00	0.1152E+03	0.1920E-09	0.1449E-10
1.45000	38.931693	0.5708E+02	0.4907E+00	0.7311E+02	0.2184E-09	0.1488E-10
1.50000	43.465124	0.6808E+02	0.4659E+00	0.5346E+02	0.2339E-09	0.1537E-10

NOTE IF FT IS NEGATIVE, THERE WAS GREATER THAN A 10% DIFFERENCE BETWEEN THE FT COMPUTED BY HOLE AND ELECTRON INCREMENTAL CHARGE

TEMPERATURE: 27.00 DEG C

```
********** PUPHS2D  EXECUTION SUMMARY **********


 DEVICE DIMENSIONS:
      X DIRECTION 0.3200E+01 MICRONS, 34 MESH LINES
      Y DIRECTION 0.8200E+00 MICRONS, 58 MESH LINES

 TEMPERATURE: 27.00 DEG C

      AN = 0.2100E-28 CM6/SEC AP = 0.0000E+00 CM6/SEC

      A0 = 0.2000E-09 CM3/SEC

 BANDGAP NARROWING SUPPRESSED

 NO OPTICAL GENERATION

 NORMALIZATION FACTORS:
      VNOR=   0.258641E-01      XNOR=  0.288251E+00
      CARNOR= 0.221001E+07      GRNOR= 0.265981E+08
      TIMNOR=0.830889E-01     CURNOR=0.122832E-11

 INITIAL GUESS READ FROM RUN:         0
      EQUILIBRIUM RUN:         0

 RESULTS:
      LINPACK EXECUTION TIME     0.0 CYBER205 SEC
      TOTAL EXECUTION TIME       0.0 CYBER205 SEC

 ********************************************************************************


********** PUPHS2D **********

 RUN:    0

 DEVICE DIMENSIONS:
      X DIRECTION 0.3200E+01 MICRONS, 34 MESH LINES
      Y DIRECTION 0.8200E+00 MICRONS, 58 MESH LINES


          00000000000000000000000000000000000
          NNNNNNNNNNNNNNNNNNNNNNNNNNNNNNNNNNN
```

Graphical output for V_{CE} = 2.0 V, V_{BE} = 1.5 V:

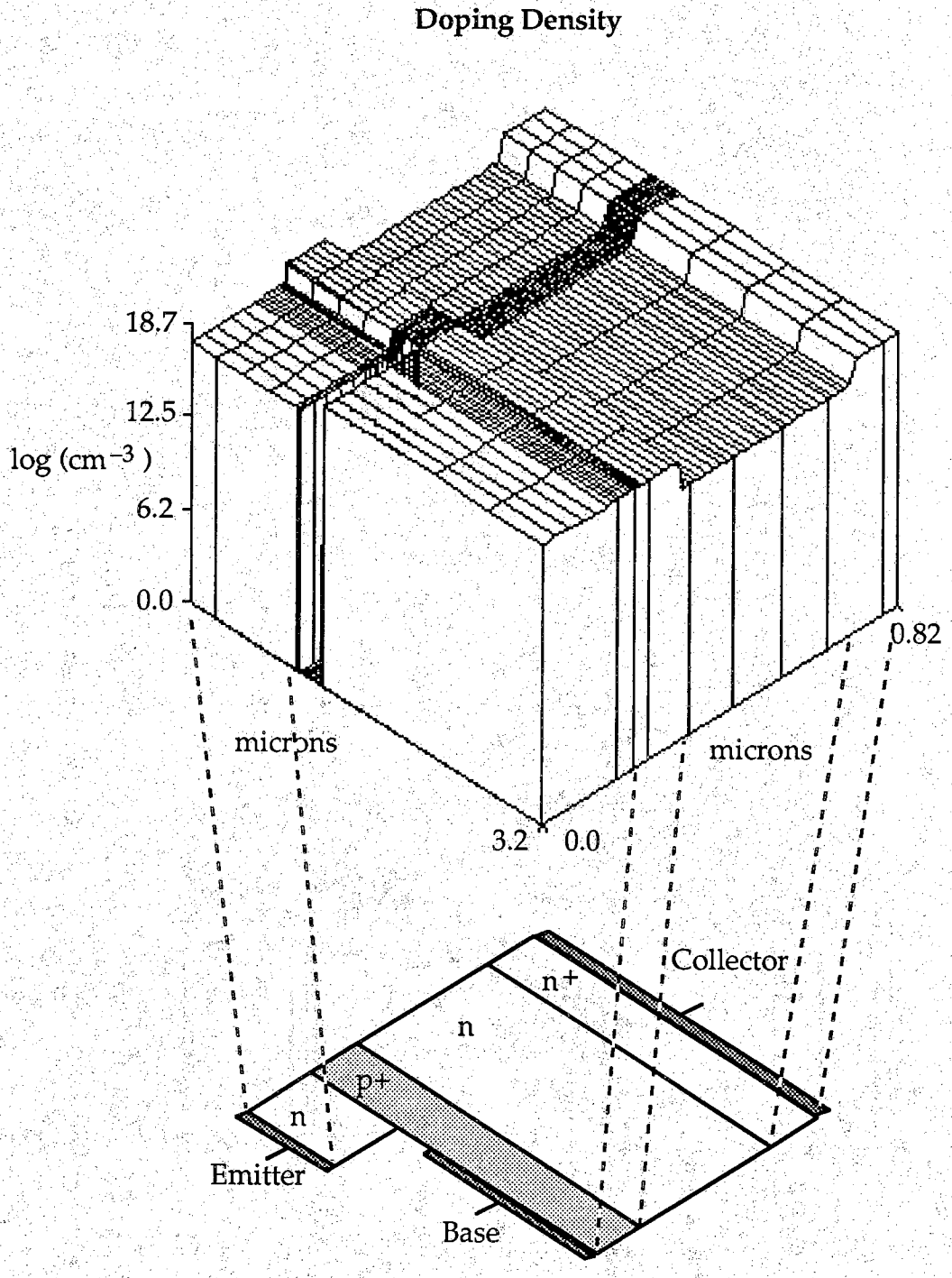

Electrostatic Potential

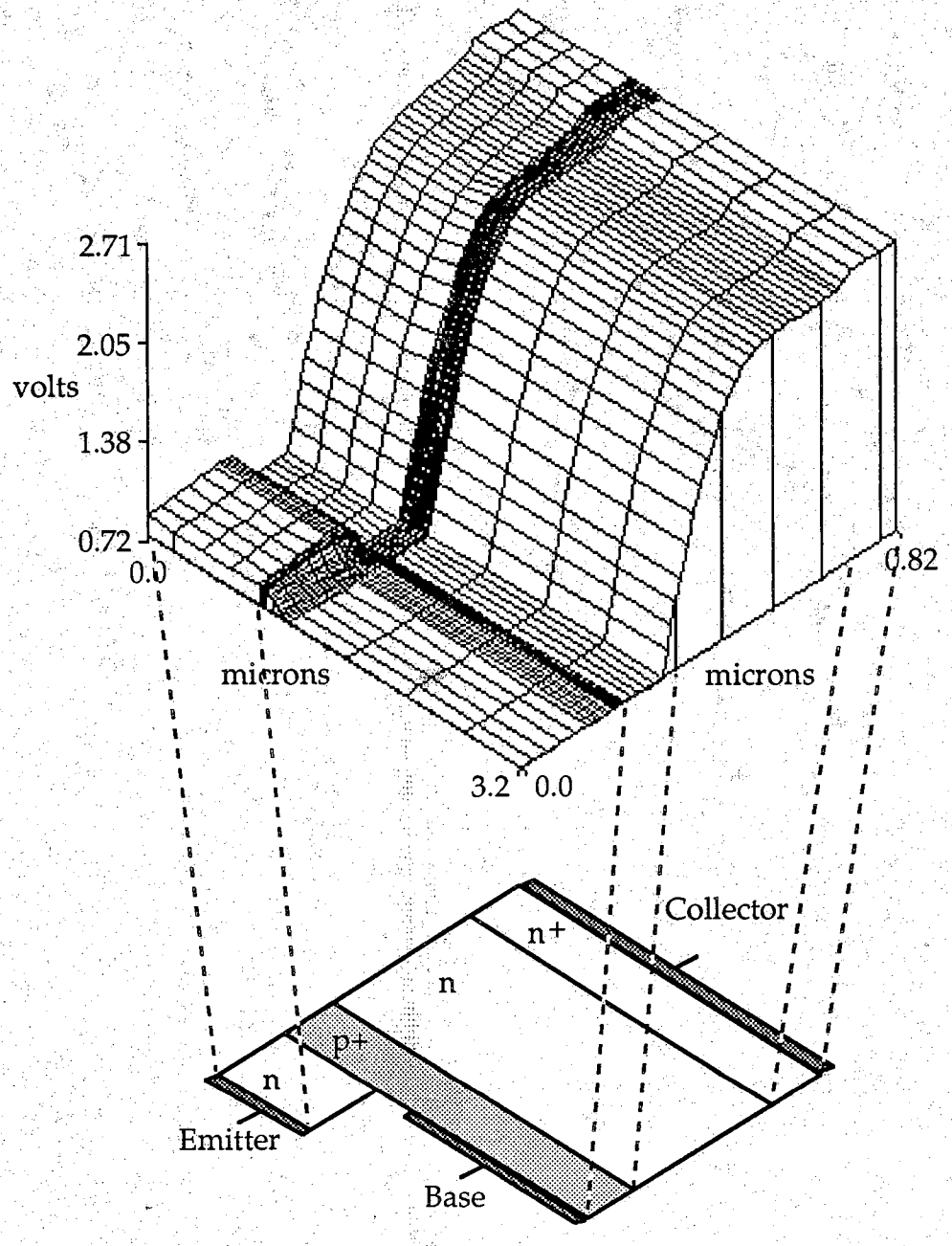

Electric Field Magnitude

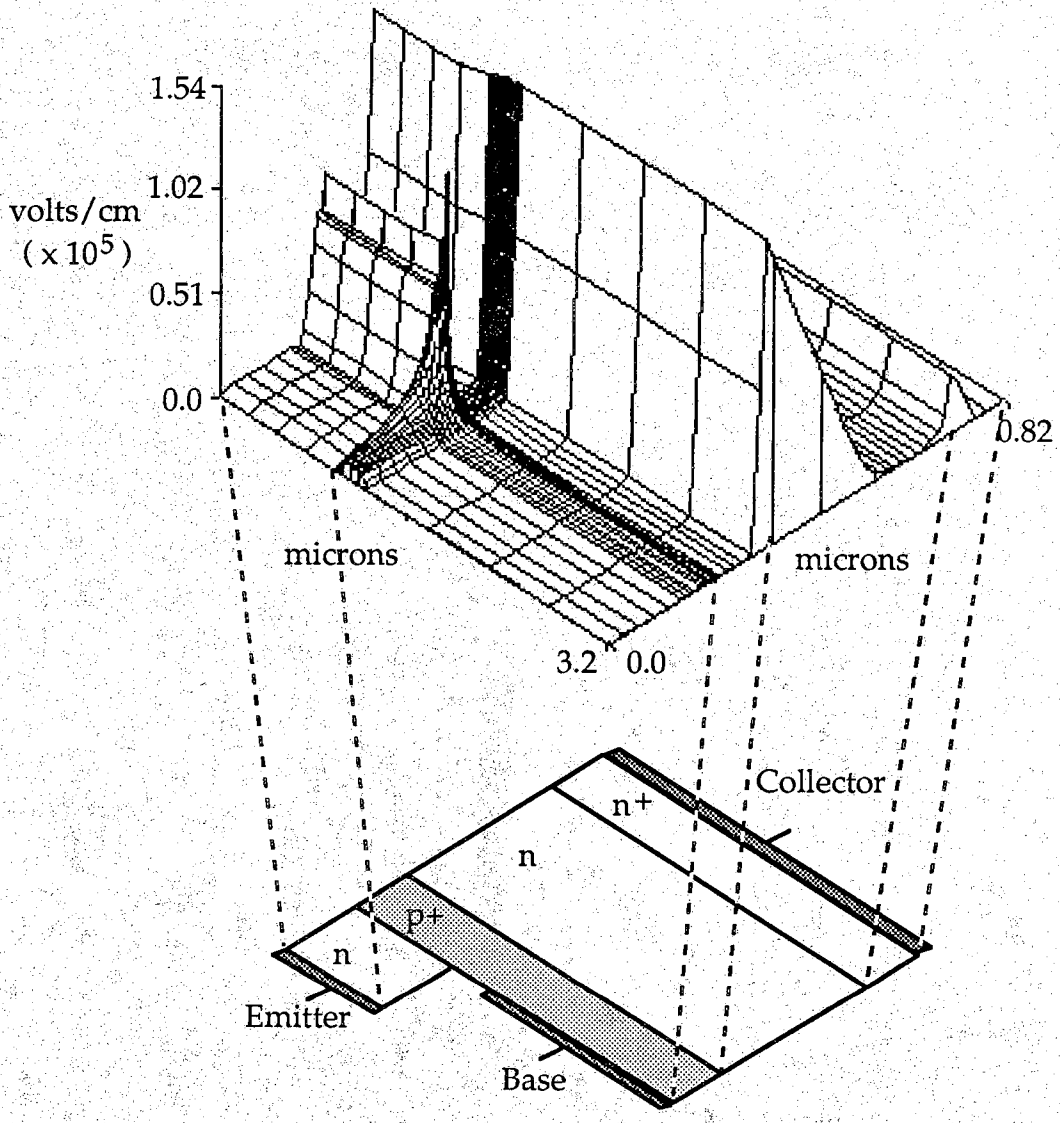

Electron Concentration

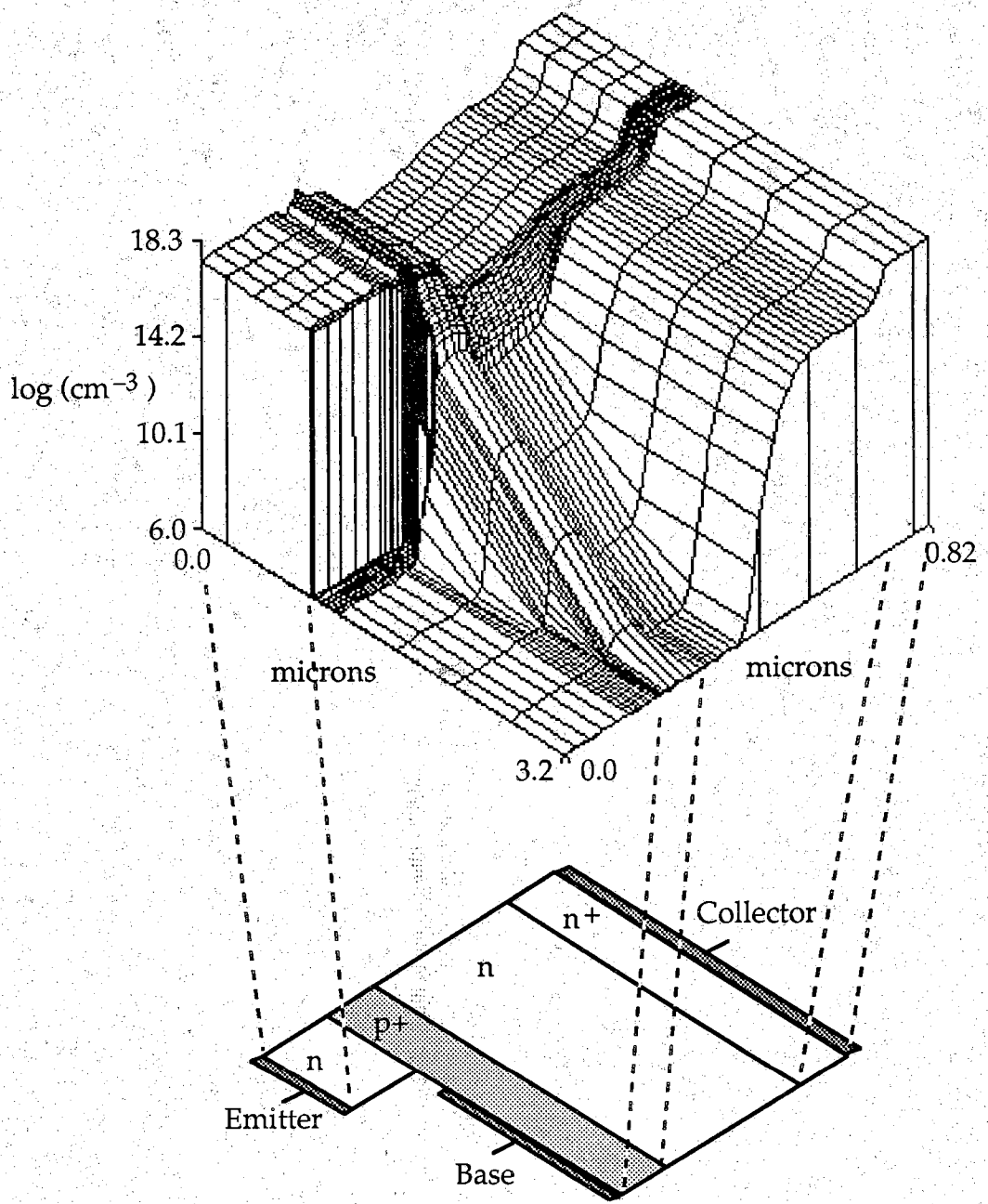

Hole Concentration

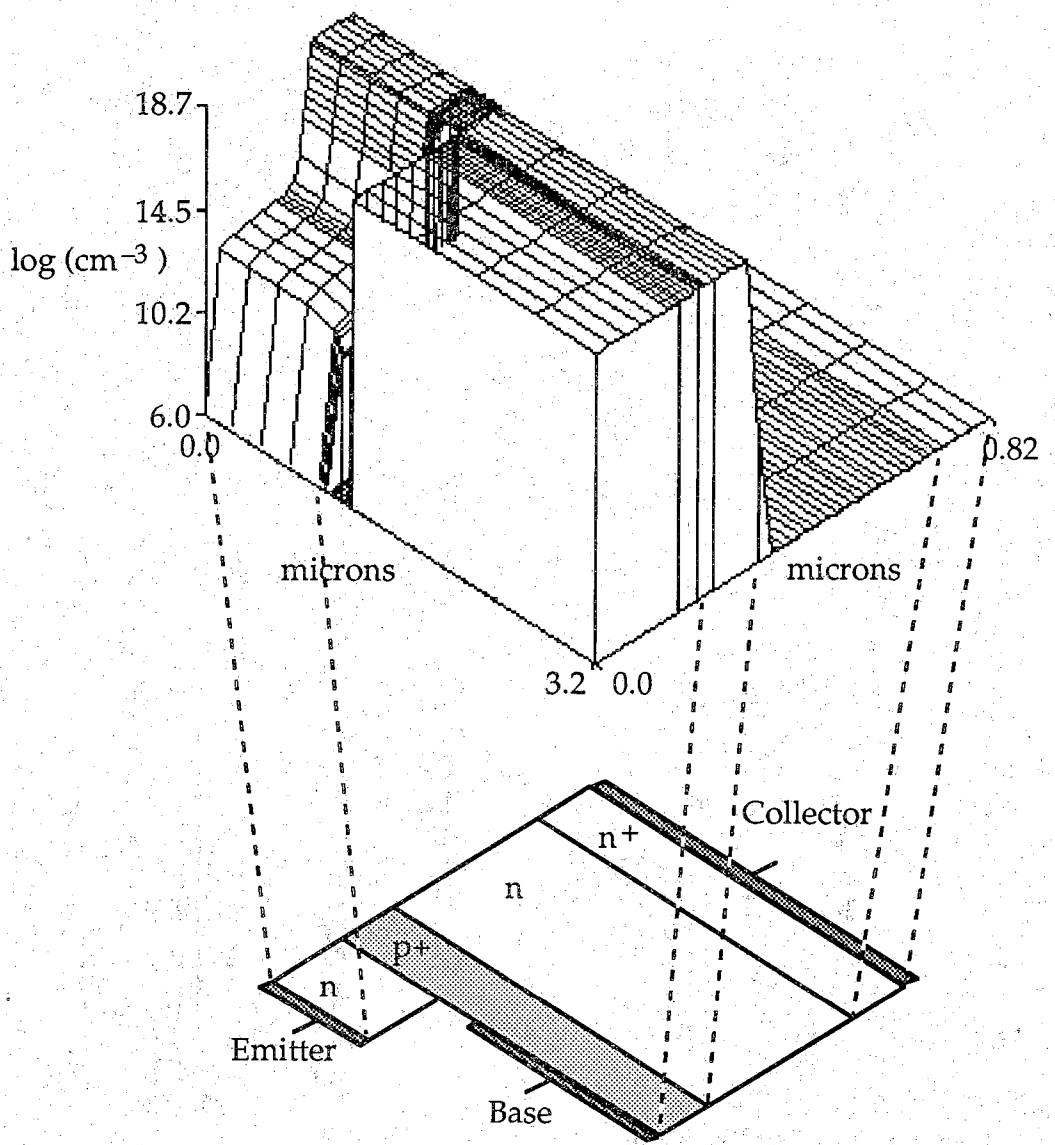

Excess Electron Concentration

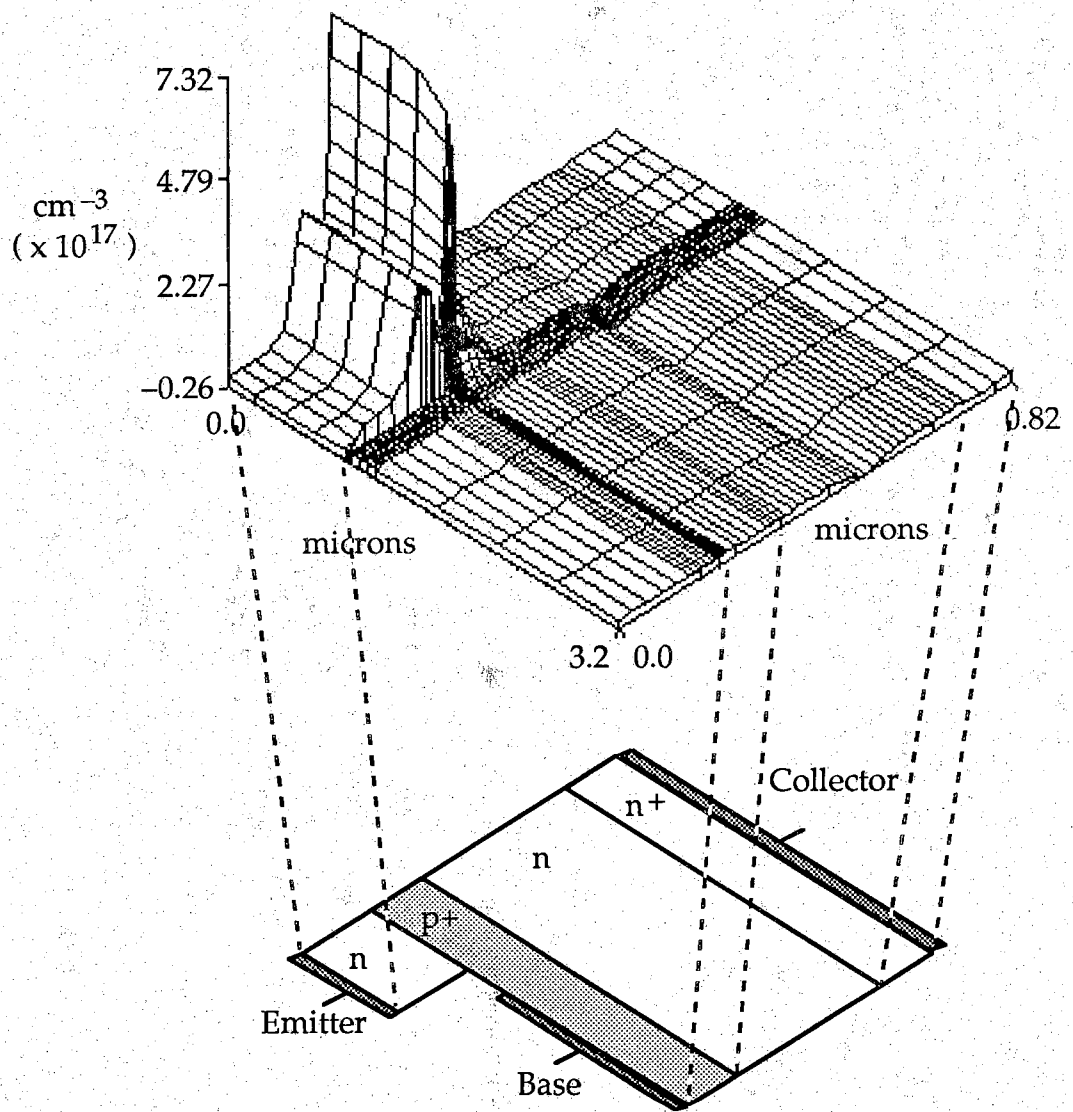

Excess Hole Concentration

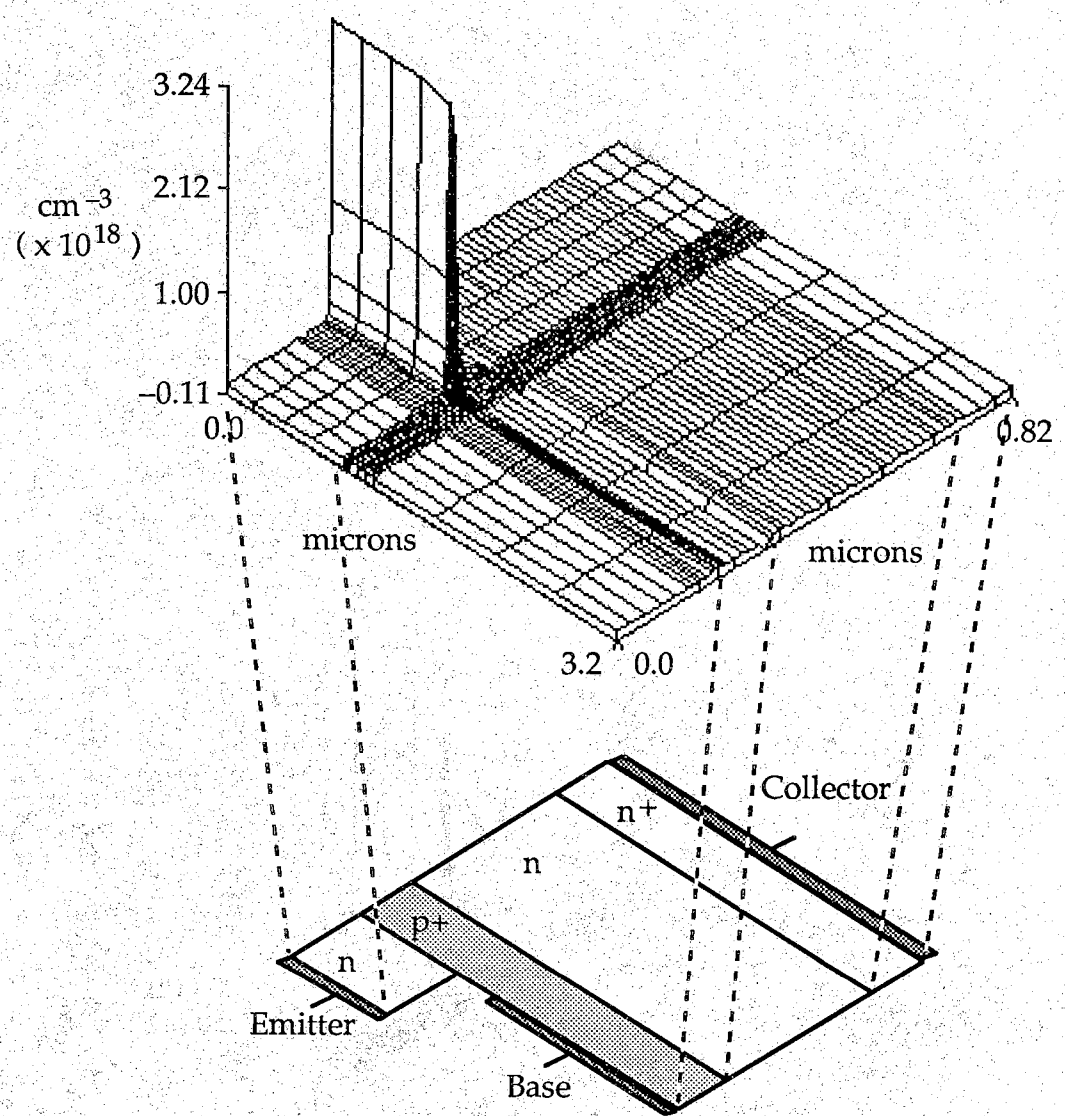

Recombination Rate

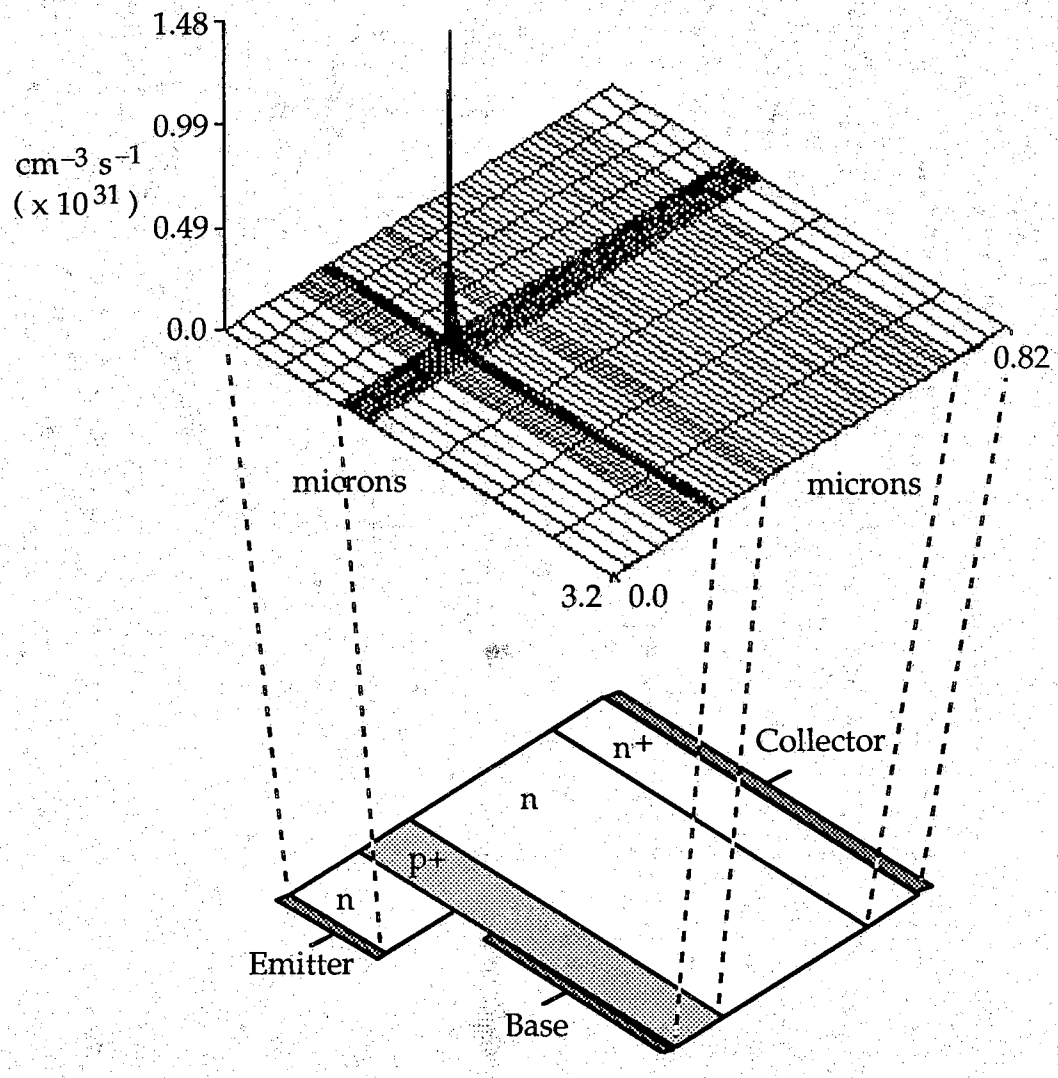

Electron Quasi–Fermi Level

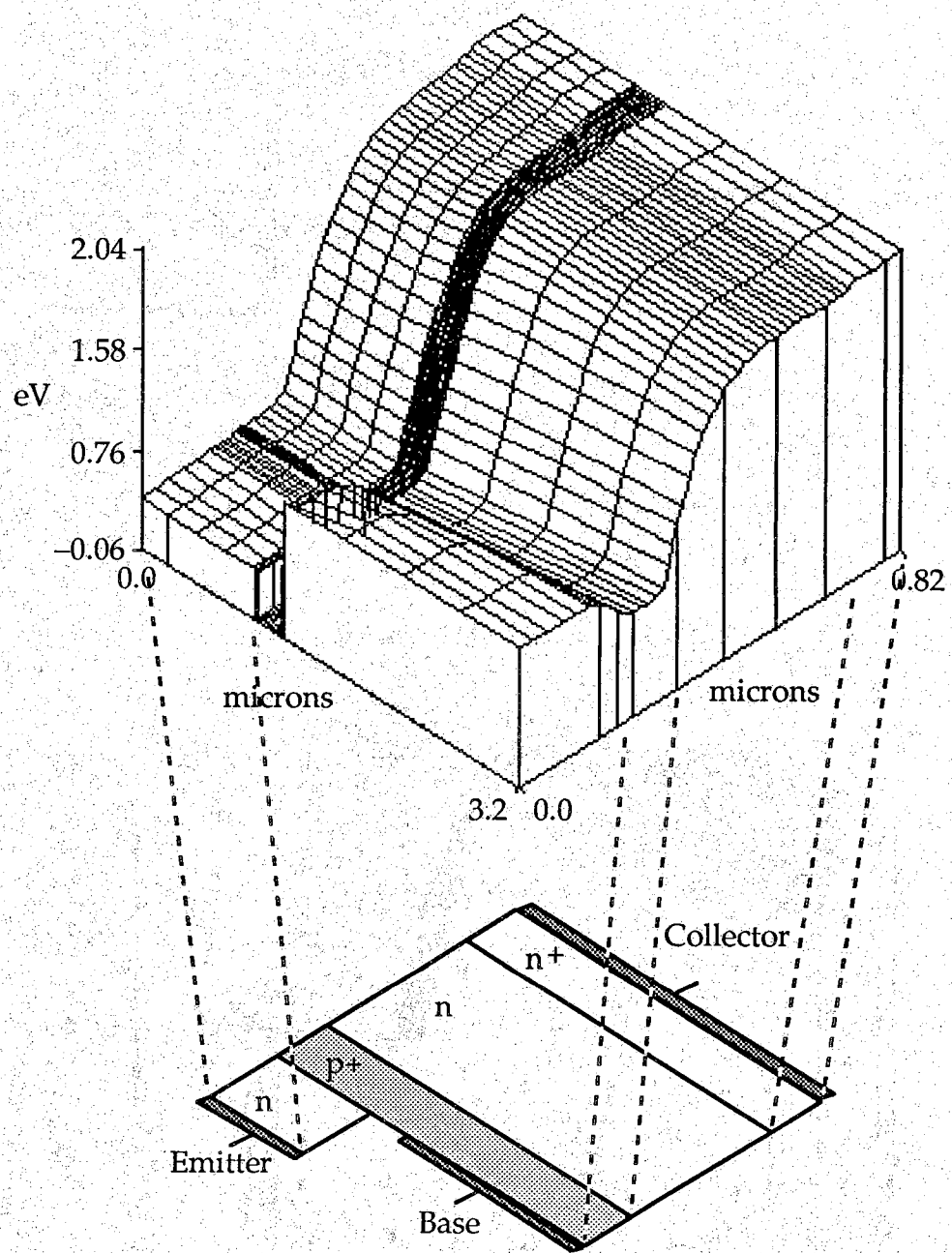

Electron Current Density Magnitude

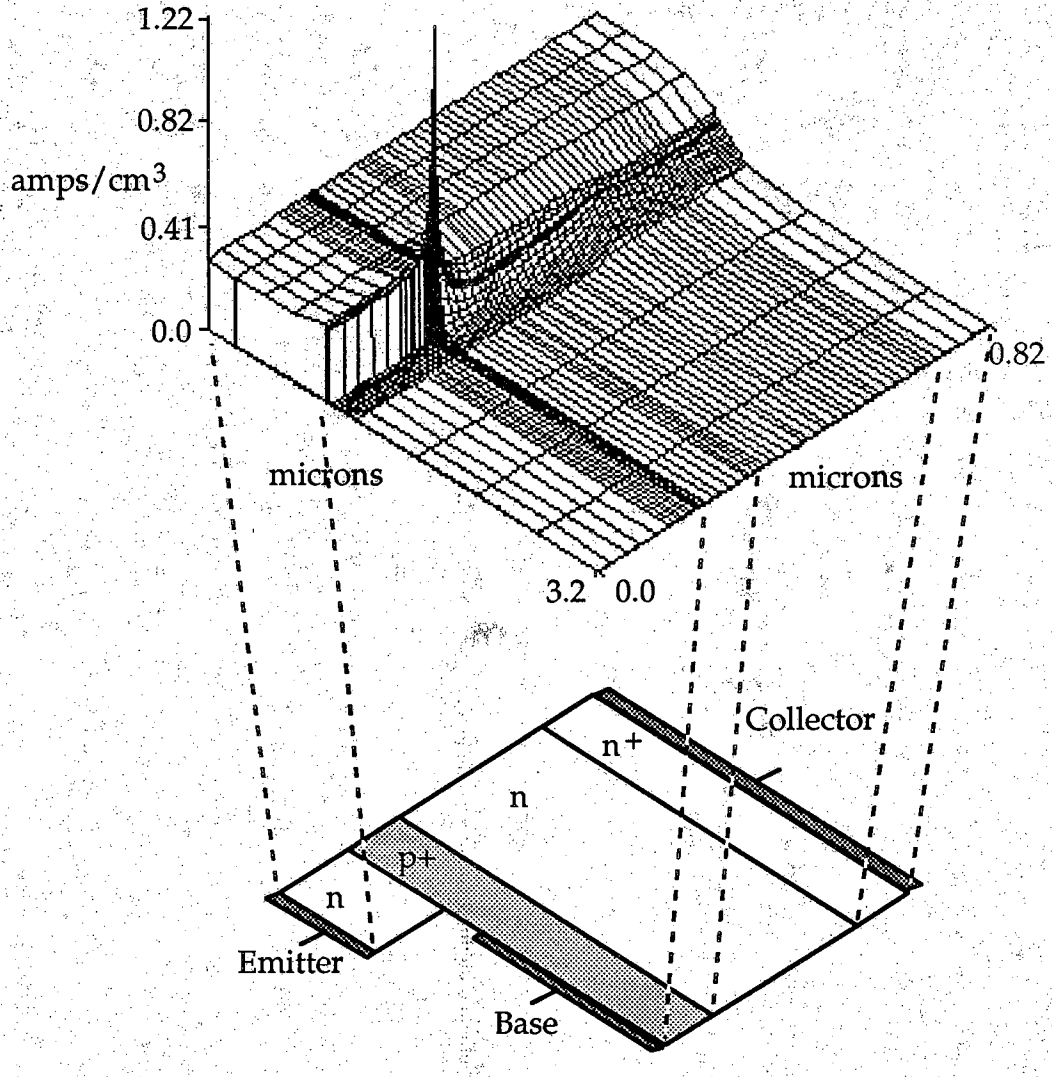

Transit Time

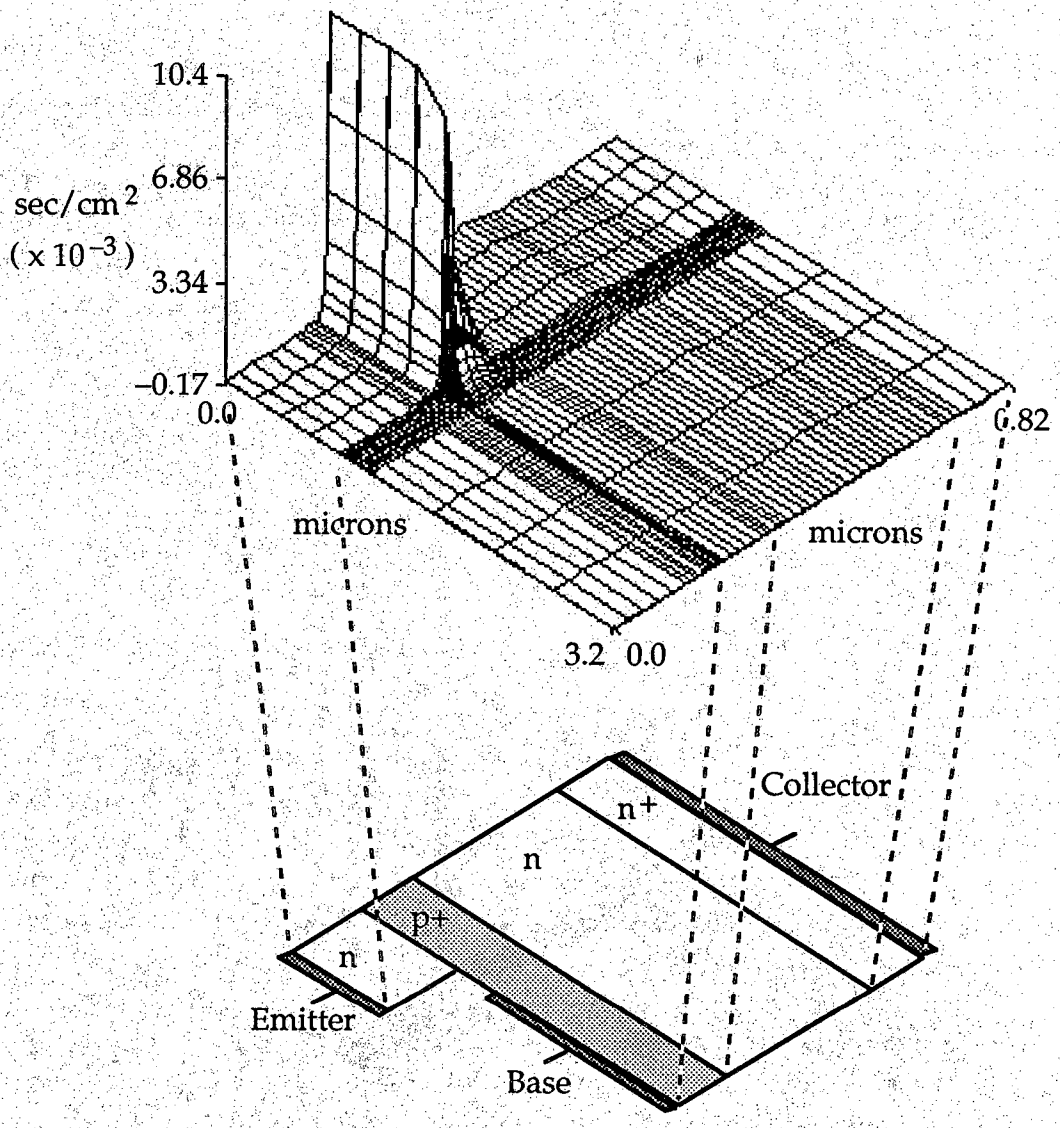

Normalized Charge Density

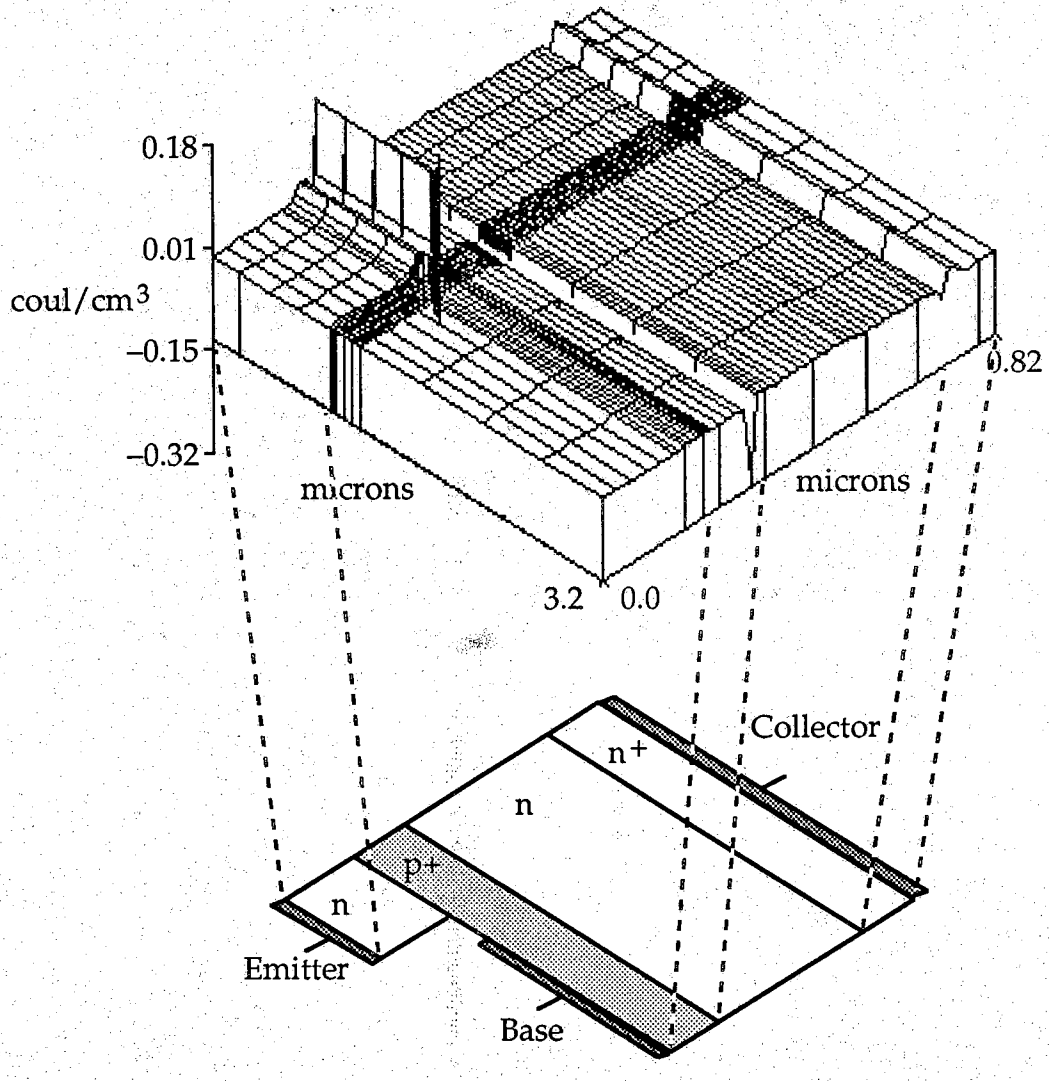

HBT Gummel Plot

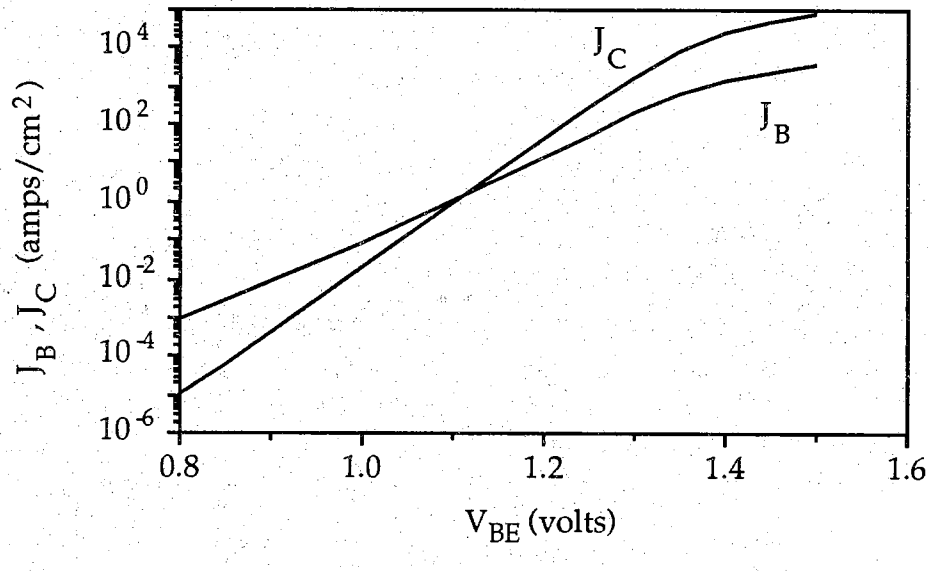

Current Gain versus Base–Emitter Voltage

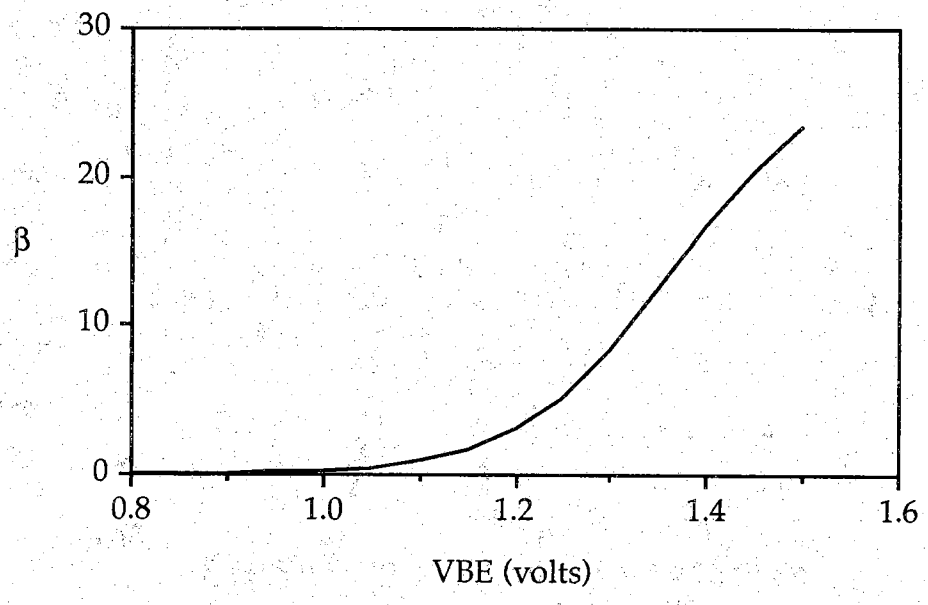

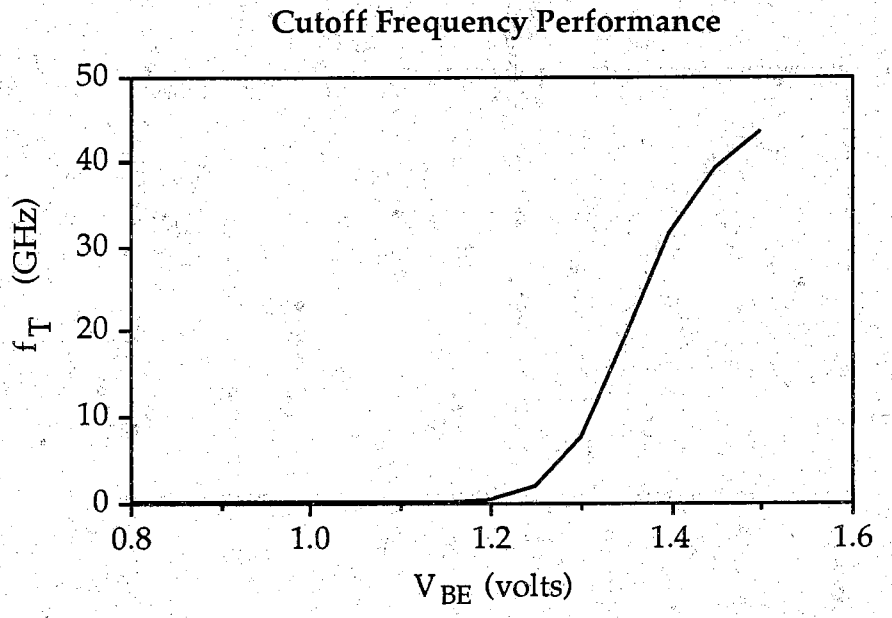
Cutoff Frequency Performance
50
40
30
20
10
0
f_T (GHz)
0.8
1.0
1.2
1.4
1.6
V_{BE} (volts)

APPENDIX D: DATA RETRIEVAL PROGRAM

The data retrieval program (RETRIEVE) for use with PUPHS2D has one card, BIAS, whose format is similar to those in the main program. In addition, the user must also indicate the data desired. To specify the data, the user simply places the name of the data type in column one. For each data type, a single column output file will be produced. The positional information is always dumped, in files *x.dat* and *y.dat* . This format is shown in the default input deck.

The data name keys and corresponding output files are:

1) doping:	doping concentration : *dop.dat*
2) potent:	electrostatic potential : *v.dat*
3) efield:	electric field magnitude : *e.dat*
4) electrons:	electron concentration : *n.dat*
5) holes:	hole concentration : *p.dat*
6) exholes:	excess hole concentration : *xp.dat*
7) exelectrons	excess electron concentration : *xn.dat*
8) recomb:	recombination rate : *rec.dat*
9) rho:	charge density : *rho.dat*
10) nicarr:	intrinsic carrier concentration : *ni.dat*
11) nfermi:	electron fermi level : *nf.dat*
12) pfermi:	hole fermi level : *pf.dat*
13) ncurrent:	electron current magnitude : *jn.dat*
14) pcurrent:	hole current magnitude : *jp.dat*
15) nvelo:	electron velocity : *vn.dat*
16) delay:	transit time per sq. cm: *tau.dat*
17) iv	terminal currents: *iv.dat*
18) freq	cutoff frequency: *f.dat*

Default values are: doping, potent, electrons, holes

The last three data types are only available for bipolar transistor runs, and data types delay and freq require a quasi–static analysis to have been performed. The data types iv and freq, are external (terminal) characteristics. These data files have a different format since they do not produce 3–D plots. The file *iv.dat* is a five column file containing the applied voltage, $\log(J_C)$, $\log(J_B)$, β, and J_C, respectively. The file *f.dat* is a five column file containing the applied voltage, f_T, total capacitance, g_m, and J_C.

BIAS

The BIAS card is used to specify the bias point for which data is desired. The BIAS key is:

BIAS

The applied bias at which data are desired.
Default value: BIAS=1.0

TAG

A character variable used to name the input data file. The input file is assumed to be named *p2d.dmp_TAG*. If quasi-static analysis results of a bipolar transistor are requested, an input file named *p2d.fdmp_TAG* will also be assumed.
Default value: TAG=xxx

APPENDIX E: DEFAULT INPUT DECK FOR RETRIEVE

The default input deck for RETRIEVE is listed below.

```
*title  default input deck
bias   bias=1.0   tag=xxx
doping
potent
electrons
holes
```

APPENDIX F: PUPHS2D INSTALLATION NOTES

PUPHS2D was written in standard FORTRAN 77, and it is configured to run under the UNIX operating system. A CYBER 205 version is also available. At Purdue PUPHS2D runs on a Gould NP-1, a computer with double precision wordlength of 64 bits and capable of manipulating numbers on the order of $10^{\pm 74}$. A CYBER 205 is also used with a highly vectorized version of the LINPACK matrix solver routines. The CYBER is capable of handling numbers greater than 10^{200}.

PUPHS2D uses the IMSL math library, version 10.0 or newer. In addition several LINPACK matrix solving routines are used, however the source code for these routines is included. Several files are needed to install PUPHS2D on your machine. The files needed and a brief description follow.

puphs2d.f :	Main program.
basis.f :	Equilibrium solver and material parameters subroutines.
options.f :	Control subroutines for the different analysis types and nonequilibrium parameter subroutines.
solver.f :	Nonequilibrium solution routines.
input.f :	Input deck interpretation subroutines.
linpack.f :	Matrix factoring and inversion routines.
vector.f :	Vectorized versions of some routines.

The first six of these files are necessary. *Vector.f* is for use on machines that allow vector processing of information. Due to the computational intensity of PUPHS2D, it is suggested that a vector–capable machine be used if possible. If a vector processor is not available, simply omit *vector.f*, the subroutines therein will be found in the IMSL library as they have been given the same names and argument lists as comparable scalar IMSL routines. In addition, lines of vector code in some of the transient routines must be modified. These are simple array equivalences and are marked with the following comment line:

```
c     vvv vector code vvv
```

There is at least one machine–dependent function, REXP. REXP is used to prevent underflow of exponentials. When exp(x) underflows, 0.0 is returned

and the underflow counter is incremented. The value of xmin, the most negative argument permitted by the exponential, is machine–dependent.

For runs in which photogeneration of carriers is desired, four additional files are required.

absorpt	:	GaAs–AlGaAs absorption coefficient data file.
am0p0	:	Spectrum data file for air mass 0.0 generation.
am1p0	:	Spectrum data file for air mass 1.0 generation.
am1p5	:	Spectrum data file for air mass 1.5 generation.

The data retrieval program, RETRIEVE, consists of two files. Their names and a brief description follow.

retrieve.f	:	Main program.
massage.f	:	Data massaging and input deck interpretation subroutines.

The IMSL subroutine library is also necessary for compilation of the retrieval program. There are no vector statements in the retrieval code. Of course it will be necessary to have a graphical interpretation package capable of producing two– and three–dimensional plots to utilize the data dumped by PUPHS2D.

As a final word of warning it should be noted that PUPHS2D solves a very large matrix equation by direct inversion of matrices. For a large finite difference mesh this will consume a large chunk of central memory. If PUPHS2D is run on a machine with insufficient memory, the simulation run will proceed **very** slowly.

Further questions may be directed to:

Paul Dodd or Mark Lundstrom
Electrical Engineering Building
Purdue University
West Lafayette, IN 47907
(317)–494–1185 or (317)–494–3515