HEDL-S/A - 1606

CONF-7809110--1

MASTER

FAST FLUX TEST FACILITY ACCEPTANCE TEST PROGRAM AND EARLY RESULTS

R.J. Bliss, C.L. Peckinpaugh,
J.B. Waldo, E.B. James

Presented at Plant Experience Working Group Meeting
O-ARAI ENGINEERING CENTER, JAPAN
September 1978

HANFORD ENGINEERING DEVELOPMENT LABORATORY
Operated by Westinghouse Hanford Company, a subsidiary of
Westinghouse Electric Corporation, under the Department of
Energy Contract No. EY-76-C-14-2170

The FFTF Acceptance Test Program and Early Results

R. J. Bliss C. L. Peckinpaugh J. B. Waldo E. B. James

INTRODUCTION

The Fast Flux Test Facility (FFTF) is an irradiation test reactor being constructed and operated by Westinghouse Hanford Company for the U. S. Department of Energy (DOE) on the Hanford Reservation at Richland, Washington. When operational, the FFTF will provide the fuel and component testing capability essential to the diverse needs of the breeder reactor program. Construction of the facility is nearing completion and system acceptance testing is in progress.

DESCRIPTION OF TEST PROGRAM

The overall FFTF acceptance program, as seen in Figure 1, has been divided into five phases for test planning and scheduling purposes. A brief description of each test phase is included below.

Phase 1 - Preoperational Tests

Preoperational tests are those tests performed on components or portions of systems to ready those various system components to support subsequent system operational tests. Separate Calibration, Grooming and Alignment (CG&A) test packages were prepared and are being performed in support of the Phase 1 test for each system. These packages include such things as calibration data sheets for all system instruments and instrumentation loops, valve grooming procedures, system flush procedures, small motor and pump operational checks, relief valve checks, electrical panel grooming and cleaning checks, baseline piping dimensional surveys, etc.

Phase 2 - System Startup Tests

System startup tests are those tests performed on individual systems or portions of systems subsequent to the preoperational tests and prior to sodium fill and hot functional testing. These tests, and all tests in subsequent phases, are performed in accordance with formal test procedures which have been prepared to fulfill the requirements of Test Specifications which were prepared by FFTF Engineering and approved by DOE.

Phase 3 - Hot Functional Tests

Hot functional tests are those tests performed on the overall plant, or on individual systems, that require the presence of sodium in the plant. These tests will demonstrate that the overall non-nuclear plant performance is acceptable and that FFTF is ready for initial fuel load.

Phase 4 - Nuclear Startup Tests

Nuclear startup tests are those tests performed to verify satisfactory system performance and overall nuclear plant operation at reactor power levels up to 10%. Phase 4 commences with fuel loading and initial criticality.

Phase 5 - Power Ascension Tests

Power ascension tests are those tests required to demonstrate satisfactory system performance and overall nuclear plant operation at reactor power levels up to and including 100% power.

KEY EVENTS IN STARTUP SEQUENCE

Figure 2 provides a listing and status of key events for the early phases of the FFTF acceptance test program. Figure 3 provides a time-sequenced display of major test events starting with sodium fill of the secondary and primary systems.

PRESENT STATUS OF TEST PROGRAM

At the present time, approximately 65% of the Phase 1 and 2 tests have been completed. Figure 4 summarizes the major systems which have been tested and are now operational to support sodium fill. On July 2, 1978 the first secondary loop was filled with sodium and pony motor flow initiated on July 3. Sodium sampling and cold trapping procedures were started immediately thereafter and are proceeding well.

The preoperational Integrated Leak Rate Test of the containment building was satisfactorily completed on June 2, 1978.

Presently, major emphasis is being placed on completing those test activities which are prerequisites for sodium fill of the remaining two secondary loops and the primary system. In particular, emphasis is being placed on dry refueling system tests and inerted primary cell leak rate testing since these two efforts present the major workloads remaining in the prerequisites to sodium fill of the primary system.

NETWORK SCHEDULING

A detailed computerized network scheduling system is presently being used to generate test program schedules and to compare actual test program progress with anticipated or scheduled progress. As basic input to this system, each test activity was broken down into a network of events showing individual test activities, time spans, manpower requirements and prerequisites. A sample network is shown in Figure 5. These individual pieces were then combined into a master test schedule which has since been used and updated to measure test progress. Since manpower requirements were entered for each individual test activity, the system has been able to provide a summary presentation of craft, operator and test engineer manpower needs versus time. A sample printout is shown in Figure 6. Actual manpower needs are then compared with estimated needs to assess productivity and to evaluate the need for revisions to the manpower estimates or possible revisions to actual manning levels.

MASTER WORK LIST

Another extremely useful system has been the computerized system for recording, compiling and tracking all open construction items, open test exceptions and open plant work items. Each open item is identified on a standard form and then input into the computer for tracking until the item has been resolved. Once the item has been worked off, it is removed from the active file but is retained in the memory file for historical reference purposes. At one time, as many as 2,000 open items were being tracked by this system.

By means of properly identifying need dates for the completion of the open items, it is possible to clearly predict and track the punchlist of items and ensuing workload which must be completed prior to commencing an upcoming key milestone in the test program. For example, this technique was used extensively to identify and track all items which had to be completed prior to sodium fill of the first secondary loop. Loop fill was not initiated until all of the pertinent items had been appropriately resolved.

By proper programming, the output of the system can be sorted by need date, system, organizational responsibility, type of open item or any number of other classifications as requested by the user organization.

Figure 7 shows a sample format for one open item in the Master Work List system. Each individual open item is listed on one of these printed formats. Daily updates are used to ensure that the data in the Master Work List are maintained current.

TEST PROGRAM RESULTS

The following section provides a discussion of the test results for some of the recent FFTF test program key events.

PREOPERATIONAL INTEGRATED LEAK RATE TEST (ILRT)

The FFTF Reactor Containment Building (RCB), shown in an aerial view in Figure 8, is a cylindrical, carbon steel vessel with hemi-ellipsoidal top and bottom heads. The steel in the cylindrical portion of the vessel is 3.5 cm thick while steel in the top and bottom heads ranges from 1.4 cm to 2.5 cm thick. The building is 56.7 m high and 41.1 m in diameter and, where exposed to the outside environment, is covered with 3.8 to 5.1 cm of insulation. The thermal resistivity of this insulation is approximately equivalent to that of 3.5 - 6.2 m of high density, steel reinforced concrete which is often used in the construction of light water reactor plant containment buildings.

The containment building is designed to limit leakage to less than .1% volume per day at a gage pressure of .703 Kg/cm^2. The total volume of the RCB is approximately 51,000 m^3 of which approximately 8,500 m^3 is normally inerted with nitrogen and isolated from the rest of the containment volume. For the preoperational ILRT, those cells which will normally be inerted during plant operation were vented and opened to the rest of the containment volume to provide an accurate measurement of leakage from the entire building.

The pressurization medium for the test was air supplied from the plant instrument air system at approximately 28 m^3/min. The pressurization and depressurization rates were limited to less than .0352 Kg/cm^2 per hour to prevent damage to critical components. The instrumentation used to measure changes in the total mass within the containment building is depicted in Figure 9 and listed below.

Item	Quantity	Repeatability
RTD's	66	.02^{o}C
Humidity Sensors	10	1.25% Full Scale
Quartz manometer pressure detectors	2	.00014 Kg/cm^2

The data from the humidity sensors, RTD/s, and pressure sensors were collected automatically at 15 minute intervals and recorded on magnetic tape and printed out on paper tape. The magnetic tape was then manually transferred to another tape recorder for updating and maintaining a master data file and for reading into a calculator. The calculator was programmed to provide a calculated change in total air mass within containment for each 15 minute period and to calculate the overall leak rate in percent volume per day. The calculator was tied directly to a copier to provide immediate hard copies of the data. Typical data plots are shown in Figures 10 and 11. Figure 10 is a least-squares plot of the data for the entire 24 hour test, whereas Figure 11 is a plot of the pressure profile for the same period. Similar plots were provided for temperature and relative humidity. The pressure plot (Figure 11) clearly shows the slight variation in pressure caused by the effect of the sun on the temperature in the building during the test period.

Following the 24 hour test for measuring leakage, a known leak was initiated as a quality check on the system's ability to detect leaks. The results of the .703 kg/cm^2 g tests are listed below:

	Acceptance Criteria	Actual
.703 kg/cm^2 g ILRT	.062% volume/day	.033%
.703 kg/cm^2 g Verification Test	.087 - .137% volume/day	.088%

Following the .703 kg/cm^2 g tests, the system was depressurized to .35 kg/cm^2 g and another ILRT and verification test was performed with the following results:

	Acceptance Criteria	Actual
.351 kg/cm^2 g ILRT	.044% volume/day	-.0015%
.351 kg/cm^{2}g Verification Test	.070 - .106% volume/day	.084%

The negative leak rate for the .351 kg/cm^2 g ILRT was evaluated to be due to data scatter and some minor amount of off-gassing since the leak rate was essentially zero. The fact that the system was able to detect the known leak at .351 kg/cm^2 g proved that the equipment was operating properly and was sensitive enough to detect leaks at the lower pressures.

During the preoperational ILRT, the RCB was cooled by five recirculating coolers in the upper part of the containment dome. The chilled water to these coolers was "blocked" at a constant flow rate to minimize temperature fluctuations in the building. The inerted cells in containment are cooled by 34 fans, 14 of which are redundant and not normally operated. These systems were not initially designed to operate at .703 kg/cm^2 g, hence extra precautions were taken and a special test of these blowers was conducted during the pressurization to .703 kg/cm^2 g for the preoperational ILRT. The results of this test are discussed in the next section.

HEATING AND VENTILATION SYSTEM TESTS

The basic heating and ventilation cooling system for FFTF is shown in Figure 12. At the present time the cooling water system and both the ex-containment and in-containment chilled water systems are operational. Prior to fill of any cooling system, open-end and closed-loop flushes were conducted wherever possible. These flushing activities proved to be very successful in eliminating system operating problems which would have been caused by minor amounts of construction debris left in the piping system at the time construction was completed.

Original plans were to use mobiltherm as the cooling medium for in-containment spaces but, because of higher expected heat loads, the medium was changed to a 40/60% water-glycol mixture because of better heat transfer properties of the water-glycol solution. Leak detectors have been installed in the in-containment gas blower systems so that the system can be shut down before substantial amounts of water leak out of a cooler if a tube leak occurred.

Since a significant heat load is not yet present in the plant, heating and ventilation system tests to date have merely verified satisfactory fan operation and confirmed that actual fan flowrates equal or exceed the design flow rates. A Phase 3 test is planned to determine overall heat removal capability once all systems are full of sodium. The data acquisition system which was used for the preoperational Integrated Leak Rate Test will also be used for this plant-wide test to rapidly collect large amounts of data for use in flow-balancing the cooling systems. To further assist with the balancing effort, computerized models of each chilled water system and a model of the cooling water system are being prepared. Once completed, these models will allow rapid determination of what effect a system lineup change will have on the flow balance of the rest of the system. These models, combined with the ability to rapidly collect system data, will greatly enhance the efforts to effectively balance the overall heating and ventilation system.

As stated earlier in the discussion of the preoperational ILRT, the ventilation fans for the normally inerted spaces were not originally designed to operate at the ILRT pressure of .703 Kg/cm^2 g. Hence, a special test was performed on these fans as the containment pressure was increased for the ILRT. In preparation for this test, current transducers and RTD's were attached to a representative sample of the units to measure running current and stator temperatures as a function of containment pressure; all data were taken using the ILRT data acquisition system. Several units were also throttled to lower the running current at atmospheric pressure to allow for the expected current increase as containment pressure was increased. The results of this special test are shown below and indicate that operation of the units will be possible for future ILRT's when they are required for heat removal from the inerted cells.

Unit	Type	Capacity	Maximum Allowable Running Current	Measured Running Current at .703 kg/cm^2 g
Reactor Cavity Fan (E-202)	Vane-Axial	450 m^3/min	94 Amps	87.7 Amps
HTS Cell Fan (E-208)	Vane-Axial	400 m^3/min	70 Amps	52.7 Amps
Interim Decay Storage Fan (E-222)	Vane-Axial	340 m^3/min	90 Amps	85.7 Amps
Head Compartment Fan (E-226)	Vane-Axial	425 m^3/min	90 Amps	61.6 Amps
Pipeway Booster Fan (R-97)	Centrifugal Turbine Compressor	15 m^3/min	5 Amps	4.4 Amps

Unit E-222 was also stopped and restarted at .703 kg/cm^2 g to verify the ability to restart a unit which trips off for some reason while containment is pressurized.

INERTED CELL LEAK RATE TESTING

Approximately 40 cells within the reactor containment building are required to be inerted with nitrogen during normal plant operation to minimize the effects of a sodium spill should one occur. Each of these cells is provided with a carbon steel liner to contain the inert gas atmosphere and to protect the structural concrete from sodium-concrete reactions. A high temperature carbon steel liner is provided to a height which is above the depth of the design basis spill for that cell and a low temperature liner continues to the top of the cell where the ceiling liner is sealed to the access plug penetrations where they exist. These cells will operate at a slight negative pressure (approximately -.00703 kg/cm^2 g)to prevent inert gas leakage into spaces which are normally occupied by operating personnel. The negative pressure in the cells is maintained by redundant compressors in the Cell Atmosphere Processing System. The capacities of these compressors require that all inerted cells and their associated cooling systems meet a leakage criteria of less than 1% volume per day at -.0175 kg/cm^2 g.

At the present time, an intensive test program is underway to test each inerted cell for leakage prior to filling piping in the cell with sodium. The cells are being tested at +.0175 Kg/cm^2 g instead of -.0175 Kg/cm^2 g since access to the cells is very limited once all closure plugs are in place; the positive pressure allows the use of bubble solution outside the cell to locate leak paths.

The first cell tested was the Primary Sodium Storage Vessel Cell which has a shielded access plug in one wall. Initial leak rates were high, but once a loose electrical penetration box was repaired the cell leakage was measured at 51 cc/min versus an allowable of 1042 cc/min.

The next major cell to be tested was one of the three main heat transport system cells with access plugs in the top of the cell instead of in the cell walls. Initial leak tests showed excessively high leak rates around many of these cell access plugs. A major rework program was initiated to clean plug sealing surfaces, to replace plug gasket material and to seal weld plates over the top of several plugs which will require very infrequent access. This activity substantially lowered the cell leak rate but still did not bring it within the allowable rate and seemed to change the major leak location from around the plugs to between the cell liner and the concrete at the top of the cell. This fact led to the conclusion that one of the seal welded plugs was now allowing the leakgage occurring past its seal to get behind the liner at some location. With this thought in mind, the large Intermediate Heat Exchange (IHX) access plug was pulled and several seal welds were noted as being incomplete. The repair of these welds is in progress and a retest is scheduled for the near future.

Once the major leaks in any given cell have been located and repaired, a technique using acoustic emission equipment is then being used to locate any smaller leaks. This technique requires manned access to the cells while the cells are pressurized. Temporary cell access plugs had previously been designed and built for the test program prior to fuel load to provide cell closure yet easy access to normally inerted cells. These plugs will now also be used to allow safe manned access into the cells while the cells are pressurized for leak testing. It is anticipated that this technique will greatly enhance leak location and our ability to meet the allowable leak rate criteria.

INITIAL SODIUM FILL OF A SECONDARY LOOP

Initial sodium fill of the first secondary loop was accomplished two days ahead of an accelerated schedule, on July 2, 1978. A basic one-line diagram of a typical secondary loop is shown in Figure 13. The following provides a discussion of several of the prelude activities which led to the actual sodium fill process.

For a number of months prior to the actual sodium fill evolution, an intensive test program was focused on ensuring that all secondary loop components were checked out and fully operational. In particular, Phase 1 and 2 tests were performed on the following secondary components:

DHX Components

- Fans
- Dampers and vanes
- Preheaters
- Isolation-valves
- Control system

Pump Components

- Liquid rheostat
- Pony motor
- Main motor
- Control system

Electrical Trace Heat Components

- Heaters
- Thermocouples
- Monitoring panels

Of high importance to the initial fill effort was the performance and expected reliability of the oil-fired preheaters for the DHX tube bundles (see Figure 14). The reliability of the preheaters is important because it was calculated that without sodium flow the sodium in a DHX tube bundle would begin to freeze in about thirty minutes should a preheater fail. To assess the performance and reliability of the preheaters a series of tests and operational runs were performed. Initial testing showed the need for the fuel oil system to maintain a constant fuel oil supply pressure. Once the system was modified to provide the constant pressure, the preheaters were then operated to preheat and hold the dry tube bundles at 205°C for 24 hours. Following these specific tests, Operations personnel ran the preheaters on an extended basis for training purposes and for the purpose of assessing unit reliability. In all, each preheater was operated for a total time of approximately two weeks prior to sodium fill. With the exception of minor fuel oil leaks, the oil-fired preheater system performed well during the entire process.

Other major evolutions which preceded the sodium fill activity were the inerting and preconditioning of the piping systems and checkout of the sodium tank car unloading system.

The secondary storage tank system and the first secondary loop were inerted simultaneously. The system was initially leak checked and inerted by evacuating the system to approximately .00703 Kg/cm^2 absolute, holding for 24 hours to detect any in-leakage, and then back filling with argon. After the initial evacuation and backfilling operation, the oxygen content in the system was lowered by pressurizing the system with argon to 2.8 kg/cm^2 g and then venting to .0703 kg/cm^2 g. This pressurization and venting cycle was repeated four times before the oxygen content was lowered to below the 50 ppm acceptance level. Gas samples for oxygen and moisture content were taken by means of an on-line purge cart. Grab samples were also taken for verification by laboratory analysis.

The sodium tank car unloading system, shown in Figures 15 and 16, was also completely checked out prior to filling the secondary sodium storage tank (T-44) shown in Figure 17. The initial test of the oil heating system to melt out a tank car indicated that an excessive amount of time would be required to heat a tank car to the desired temperature of 150°C. To speed the heating process, the oil burner nozzles were increased in size and the temperature of the primary oil system was increased from 170°C to 205°C. Following these modifications the tank car heating system was able to increase the tank car sodium temperature from ambient to approximately 150°C in 24 hours.

The next step in the sodium fill process was to preheat and fill the secondary sodium storage tank, T-44, using about 2.5 tank cars of sodium at 150°C. Following fill of T-44, the loop's sodium processing system was filled from T-44 for the purpose of obtaining a measure of sodium purity using a Plugging Temperature Indicator (PTI); results of this sample showed the plugging temperature to be less than 143°C, and indicated that sodium cold trapping would not be required prior to fill of the main secondary loop.

Preheat of the main secondary loop was performed in parallel with fill of its sodium processing system and was paced by the slow, methodical preheat of the Intermediate Heat Exchanger (IHX). A cutaway of an IHX is shown in Figure 18. Because of the large mass of the IHX and the indirect method of heat application with heaters on the outside of the IHX guard vessel, the IHX was limited to a heatup rate of less than 2°C per hour. To ensure that the IHX internals were fully heated to 175°C, the guard vessel temperature was increased to 230°C for 24 hours and then lowered back to approximately 175°C for sodium fill.

Once the secondary system had been fully preheated, sodium fill of the loop was completed by pressurizing T-44 and filling the loop via the loop drain lines as shown in Figure 19. After establishing freeze plugs in the high point freeze vents, efforts were focused on starting loop flow using the pony motor on the main loop pump. Pony motor flow at approximately 82 kg/s was started within 24 hours of completing the loop fill. Once main loop flow had been started, flow through the sodium processing system was reinitiated, and a PTI run was made with a resultant plugging temperature of approximately 150°C. Cold trapping was not initiated for several more days until the plugging temperature increased to approximately 157°C; at that time cold trapping was initiated with a minimum cold trap temperature of 138°C. Within a few days of initiating cold trapping, the loop plugging temperature had been lowered to less than 140°C.

The next sequence of events to occur included several rapid flushes of several hundred kg of sodium from the loop back to the storage tank (T-44) via a low point drain connection on the suction line of the main loop pump in an attempt to flush out any possible debris before operating the pump at high flow rates. Similar blowdowns were then performed through all loop drain valves following pump operation at full flow conditions.

Preparations are now being performed to proceed with sodium fill of the remaining two secondary loops.

FUTURE TEST SCHEDULE

Following fill of the secondary loops, the next major test activity in sequence will be sodium fill of the primary system. The major prerequisite to primary fill is completion of the dry testing of all refueling components. The refueling test program calls for actual performance of sufficient fuel and test article handling evolutions to ensure that all possible fuel handling configurations have been checked out prior to filling the primary system with sodium. This activity is presently progressing with a scheduled completion date which supports primary sodium fill in December 1978.

The follow-on key test activities with predicted schedule dates are shown in Figure 20. The present schedule calls for completion of the acceptance test program and initiation of beneficial irradiation testing in February, 1980.

FFTF FIVE PHASE TEST PROGRAM

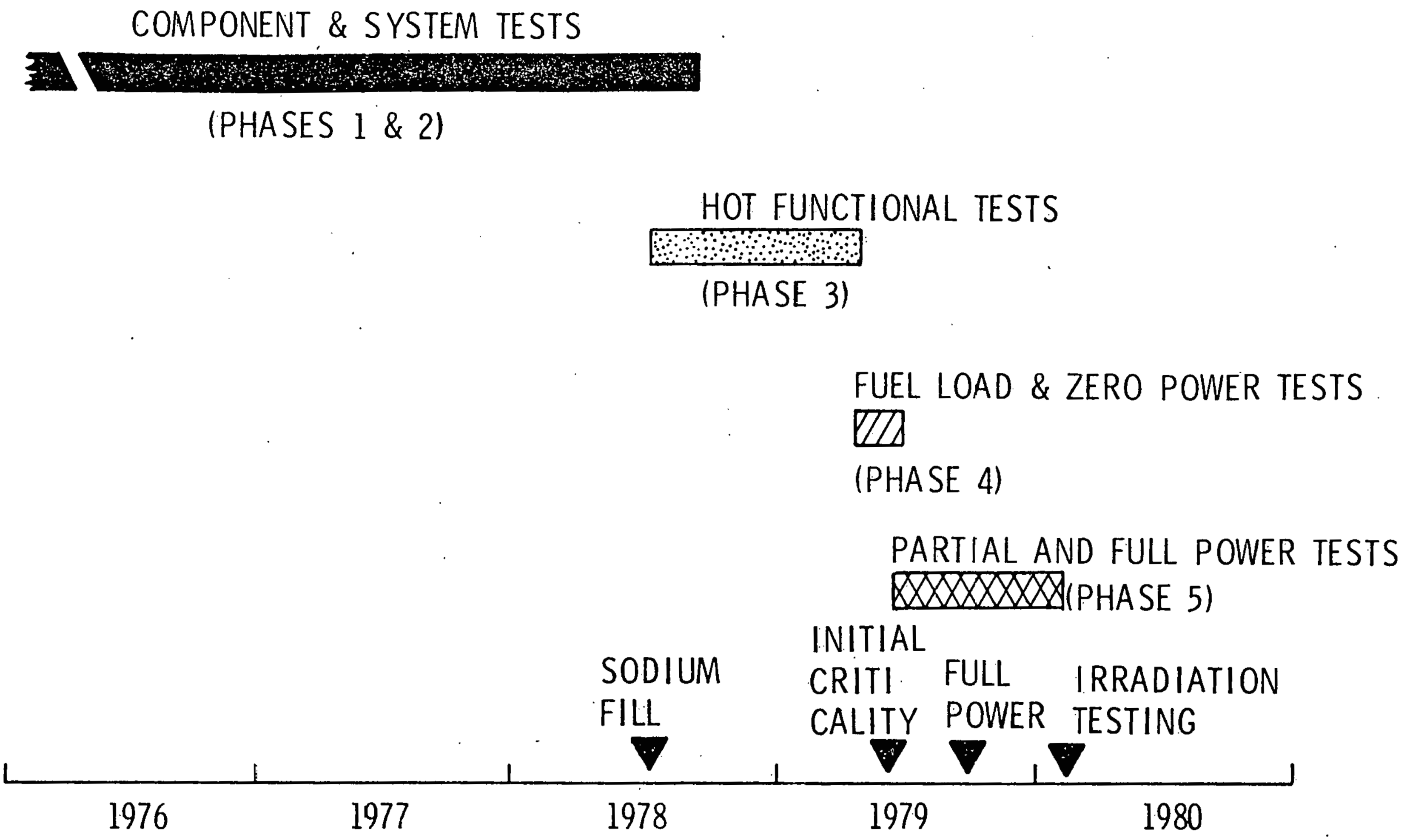

Figure 1

HEDL 7807-172.4

KEY EVENTS

EVENT	STATUS
• CELL HEAT REJECTION SYSTEM TESTING	APPROX. 90% COMPLETE
• INTEGRATED LEAK RATE TEST	COMPLETE
• INERTED CELL LEAK RATE TESTING	APPROX. 10% COMPLETE
• FUEL HANDLING SYSTEM TESTING (DRY)	APPROX. 20% COMPLETE
• NA FILL OF SECONDARY SYSTEM	ONE LOOP FULL
• NA FILL OF PRIMARY SYSTEM	SCHEDULED FOR DECEMBER 1978

Figure 2

FFTF ACCEPTANCE TEST PROGRAM

PHASES III, IV, AND V BASE PLAN

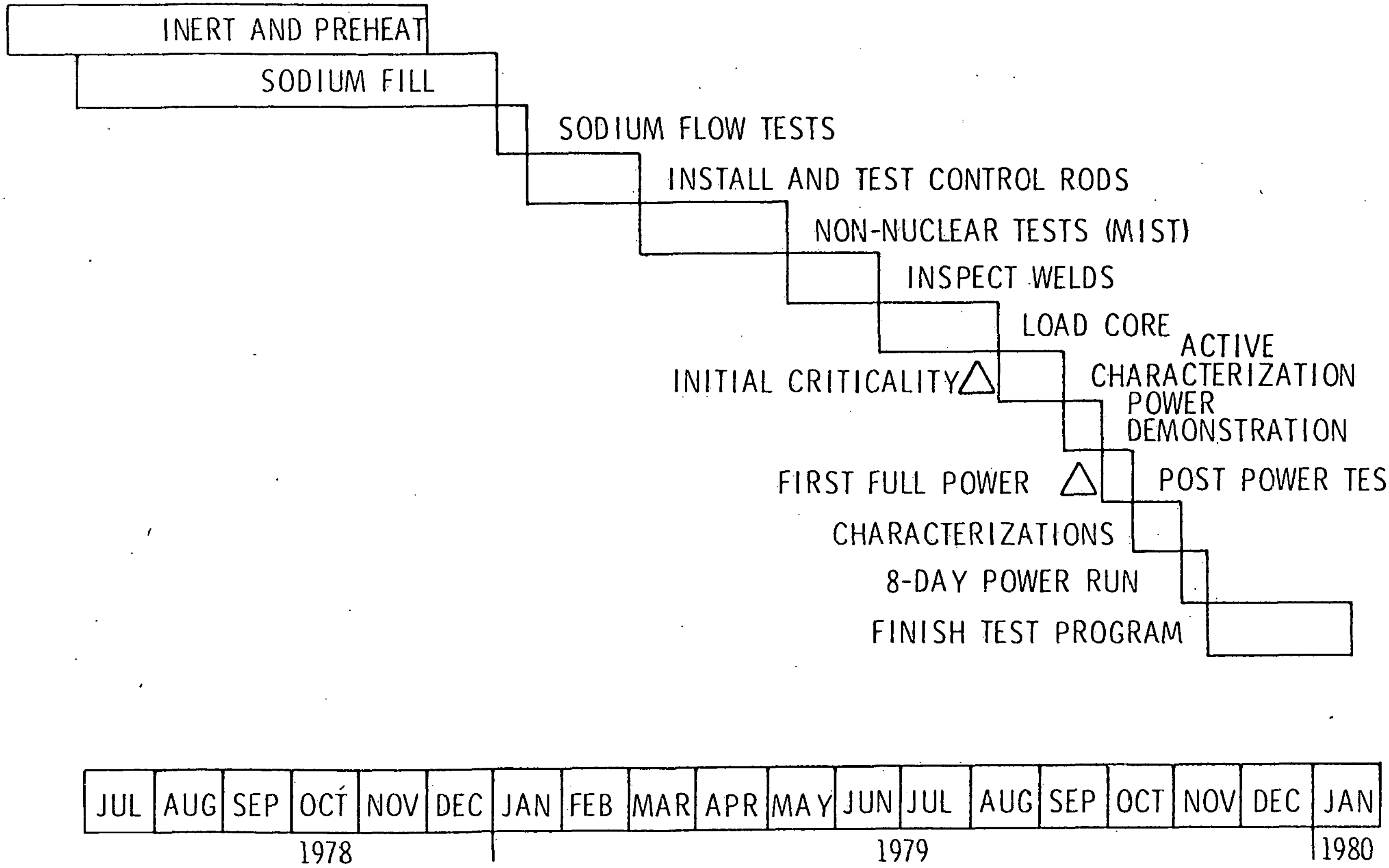

Figure 3

HEDL 7807-172.3

KEY OPERATIONAL SYSTEMS

- ELECTRICAL SYSTEMS
- COOLING WATER SYSTEMS
- MAJOR HEATING AND VENTILATION SYSTEMS
- FIRE DETECTION AND SUPPRESSION SYSTEMS
- INSTRUMENT AIR SYSTEMS
- DATA ACQUISITION SYSTEM
- PLANT ANNUNCIATOR SYSTEMS
- INERT GAS SYSTEMS
- SECONDARY LOOP PREHEAT SYSTEMS
- ONE SECONDARY LOOP IS FULL OF SODIUM AND THE PUMP IS OPERATING

Figure 4

COOLING WATER SYSTEM
FLUSH, CG&A, & ATP SAMPLE NETWORK

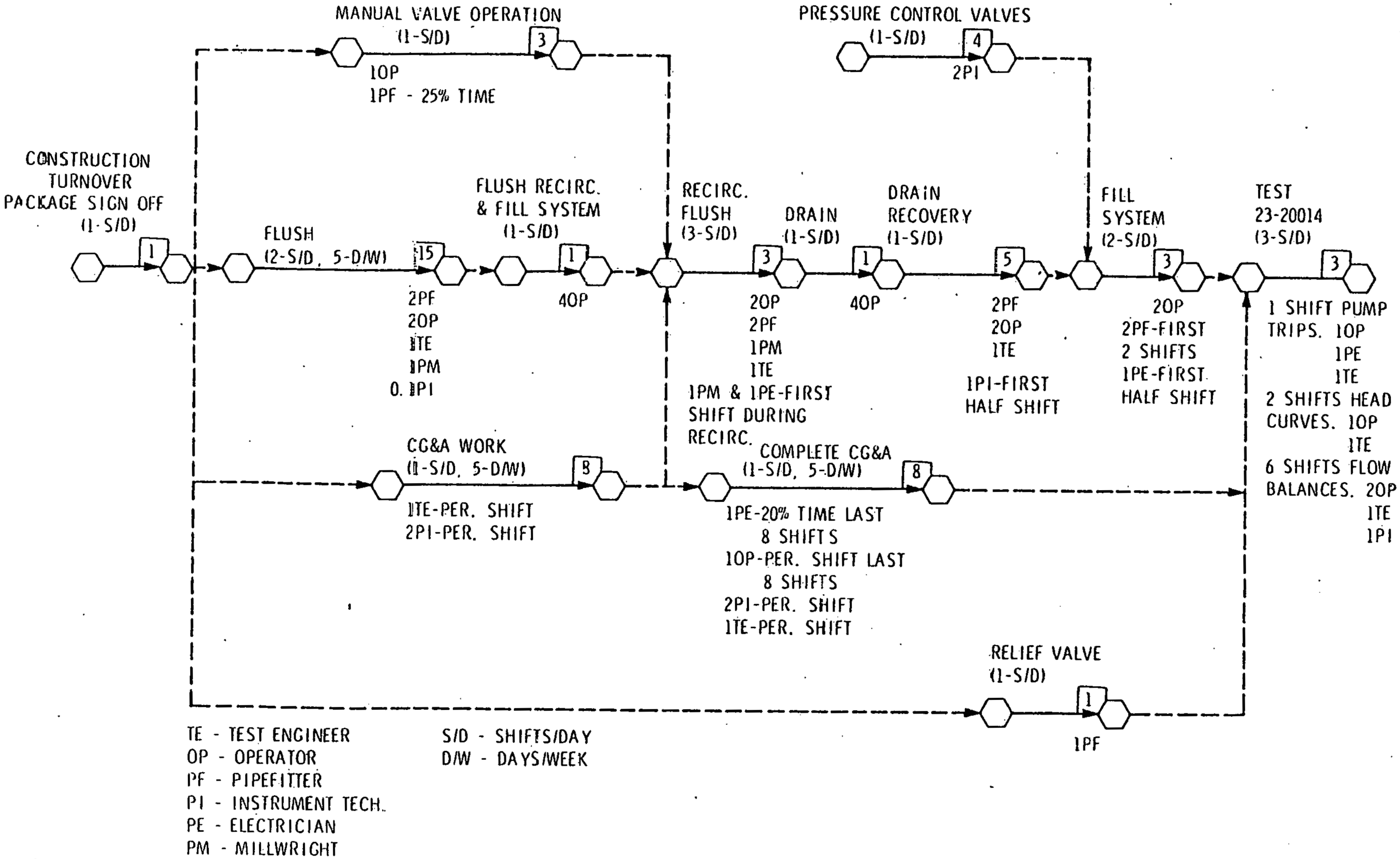

HEDL 7807-172.5

Figure 5

SAMPLE RESOURCE PLOT

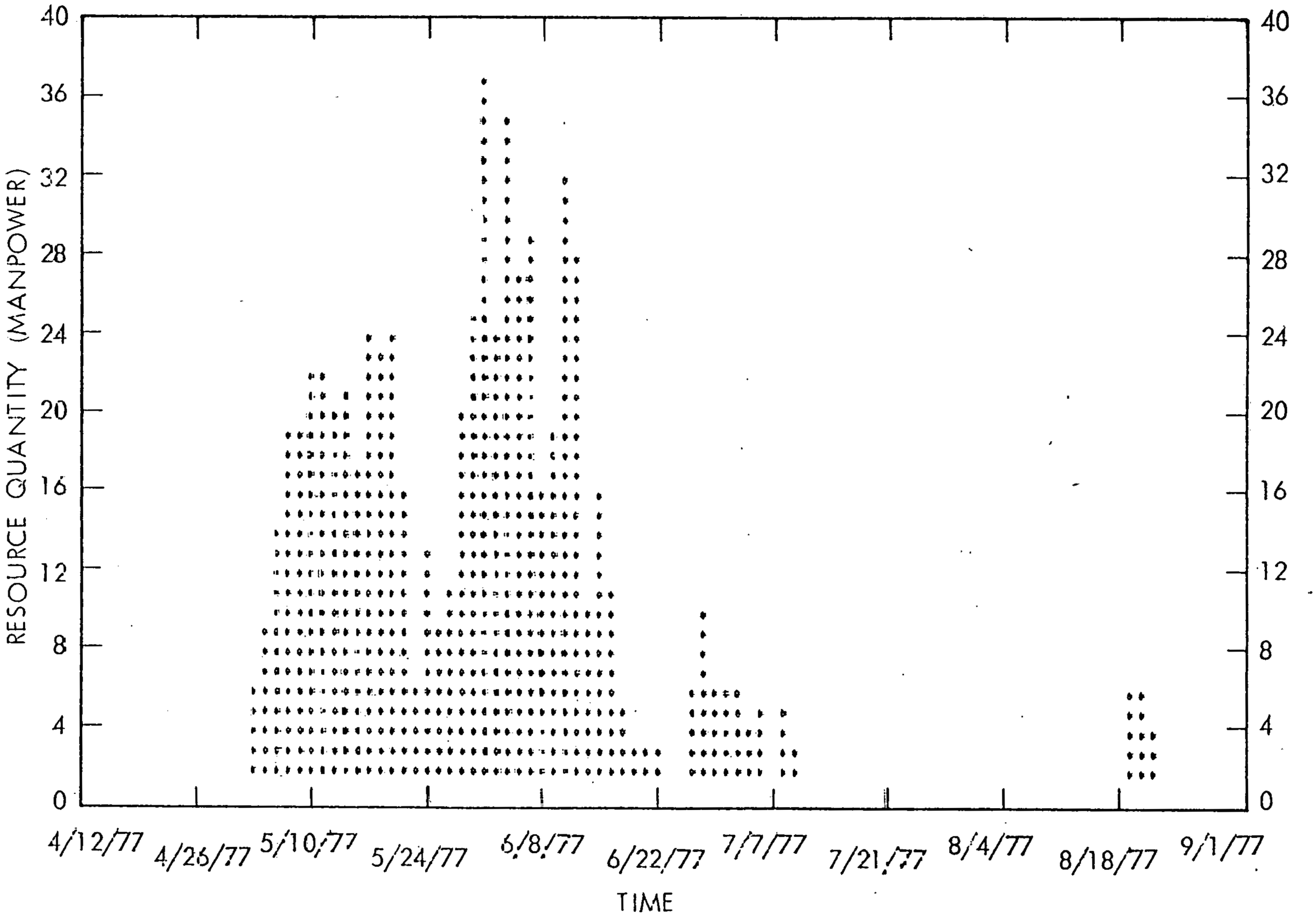

Figure 6

HEDL 7808-266.3

SAMPLE PRINTOUT FROM MASTER WORK LIST

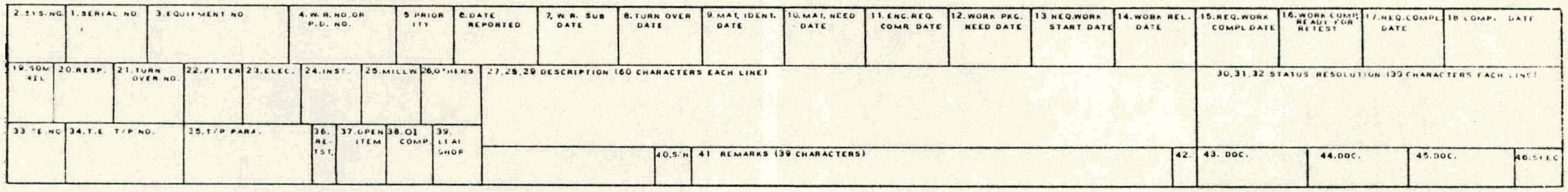

2.SYS.NO. | 1.SERIAL NO. | 3.EQUIPMENT NO. | 4.W.R.NO.OR P.D. NO. | 5 PRIORITY | 6.DATE REPORTED | 7. W.R. SUB DATE | 8.TURN OVER DATE | 9.MAT. IDENT. DATE | 10.MAT. NEED DATE | 11.ENG.REQ. COMP. DATE | 12.WORK PKG. NEED DATE | 13 REQ.WORK START DATE | 14.WORK REL. DATE | 15.REQ.WORK COMPL.DATE | 16.WORK COMP. READY FOR RETEST | 17.REQ.COMPL. DATE | 18 COMP. DATE

19.SOM REL | 20.RESP. | 21.TURN OVER NO. | 22.FITTER | 23.ELEC. | 24.INST. | 25.MILLW. | 26.OTHERS | 27,28,29 DESCRIPTION (60 CHARACTERS EACH LINE) | 30,31,32 STATUS RESOLUTION (30 CHARACTERS EACH LINE)

33 TE.NO | 34.T.E T/P NO. | 35.T/P PARA. | 36. RE-TST. | 37.OPEN ITEM | 38.OI COMP. | 39. LEAD SHOP | 40.S/H | 41 REMARKS (39 CHARACTERS) | 42. | 43. DOC. | 44.DOC. | 45.DOC. | 46.SPEC

SYS. - SYSTEM
W.R. - WORK REQUEST
P.D. - PLANT DEFICIENCY
MAT. - MATERIAL
IDENT. - IDENTIFICATION
ENG. - ENGINEERING
COMP. - COMPLETION
PKG. - PACKAGE
REQ. - REQUIRED
REL. - RELEASE
COMPL. - COMPLETION

SOM - SHIFT OPERATION MANAGER
RESP. - RESPONSIBILITY
FITTER - PIPEFITTER
ELEC. - ELECTRICIAN
INST. - INSTRUMENT TECHNICIAN
MILLW. - MILLWRIGHT
T.E. - TEST EXCEPTION
T/P - TEST PROCEDURE
O.I. - CONSTRUCTION OPEN ITEM
DOC. - REFERENCE DOCUMENT
SPEC. - USED TO IDENTIFY TEST PROGRAM RELEASE POINTS

Figure 7

HEDL 7808-266.1

Figure 8

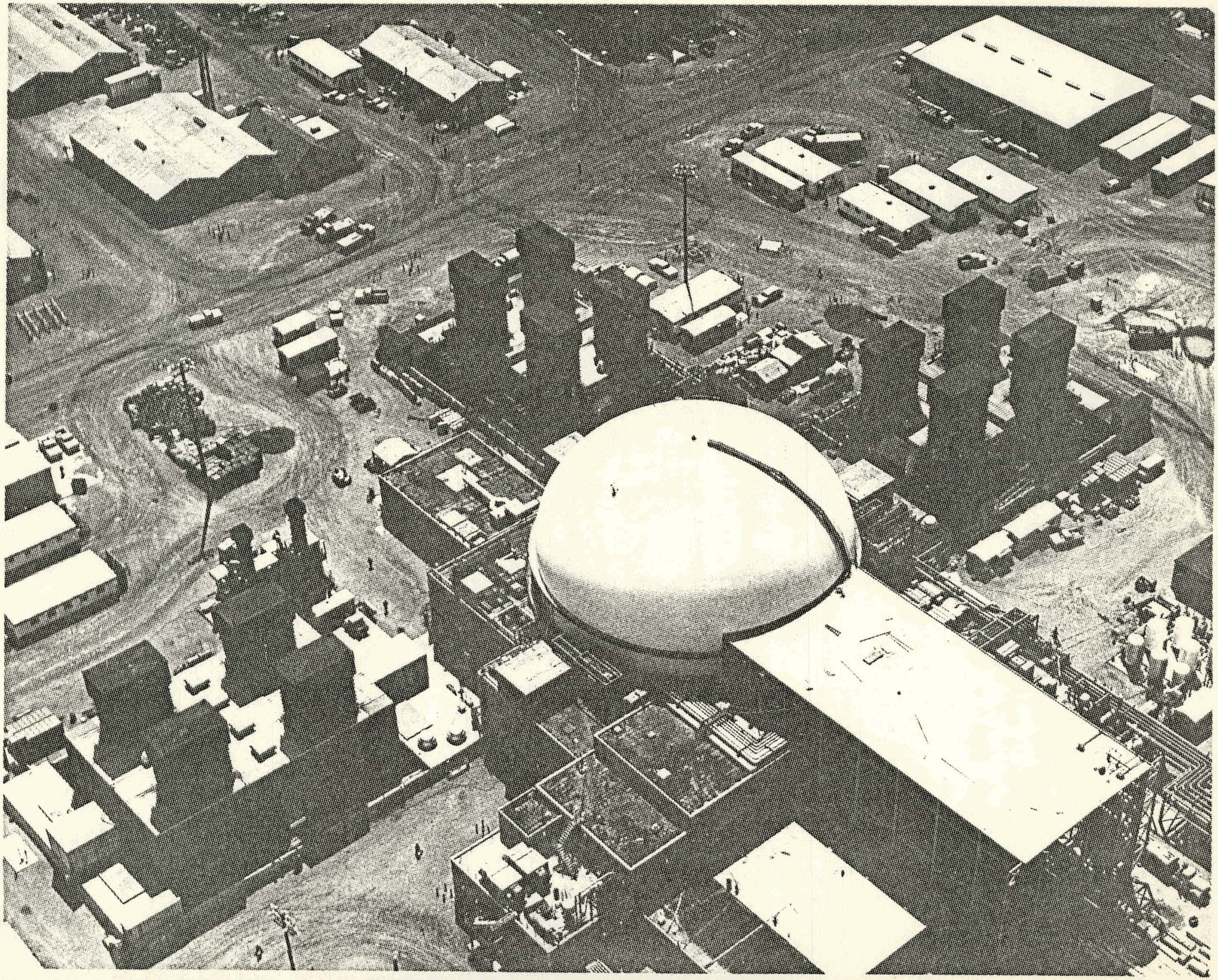

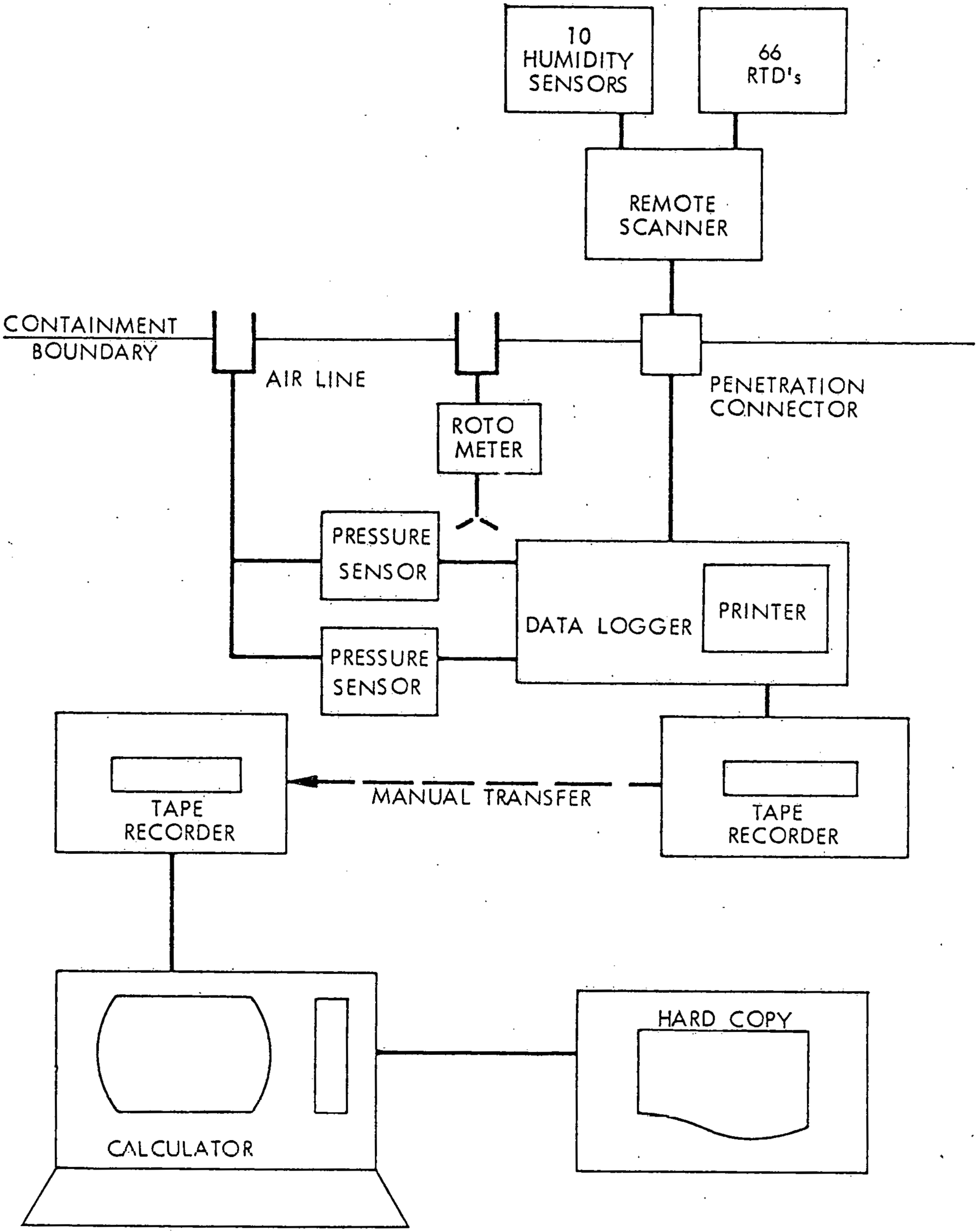

FFTF ILRT INSTRUMENTATION

HEDL 7805-062.1

Figure 9

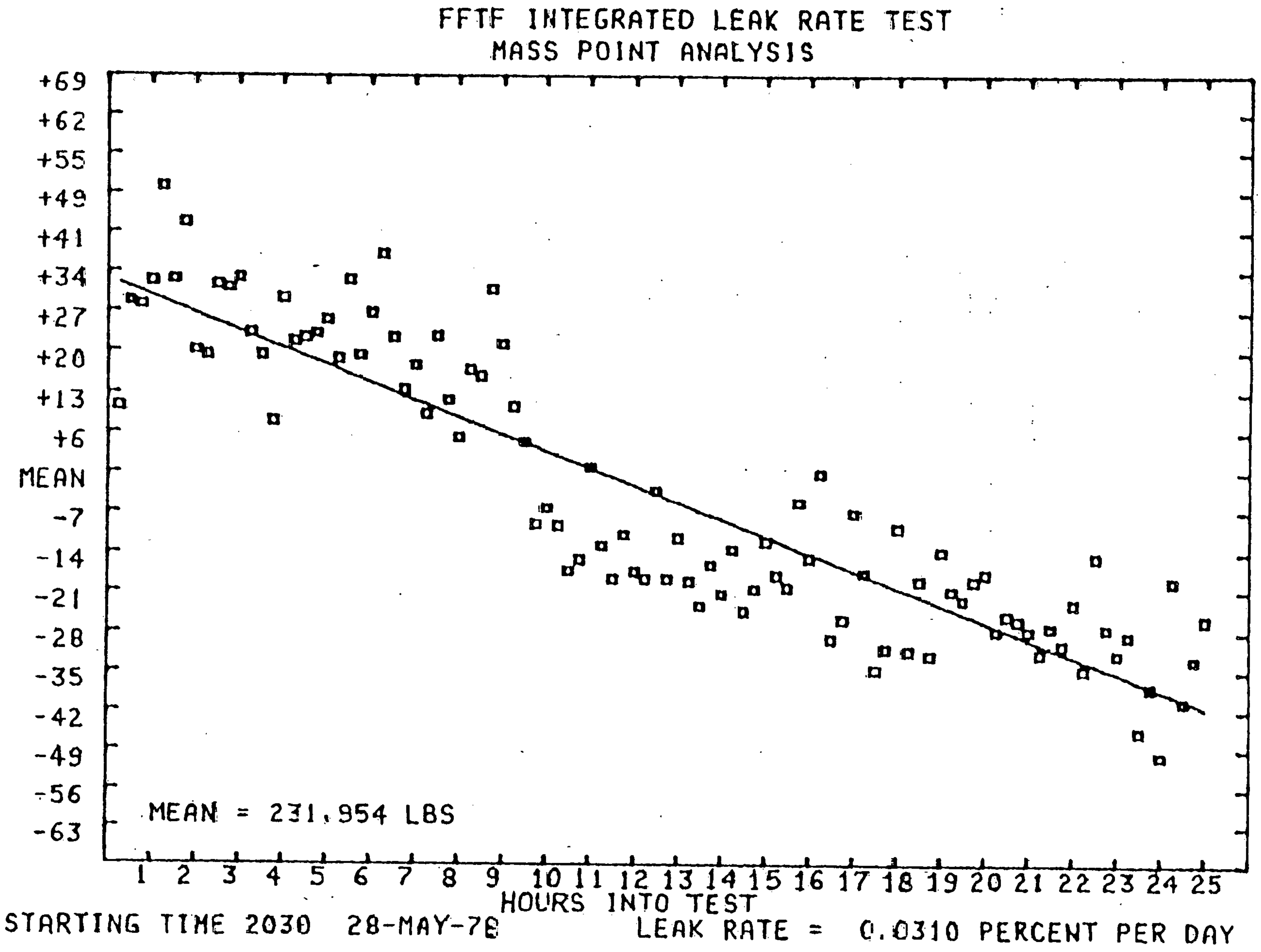
FFTF INTEGRATED LEAK RATE TEST
MASS POINT ANALYSIS
+69
+62
+55
+49
+41
+34
+27
+20
+13
+6
MEAN
-7
-14
-21
-28
-35
-42
-49
-56
-63
MEAN = 231,954 LBS
1 2 3 4 5 6 7 8 9 10 11 12 13 14 15 16 17 18 19 20 21 22 23 24 25
HOURS INTO TEST
STARTING TIME 2030 28-MAY-78
LEAK RATE = 0.0310 PERCENT PER DAY

Figure 10

Figure 11

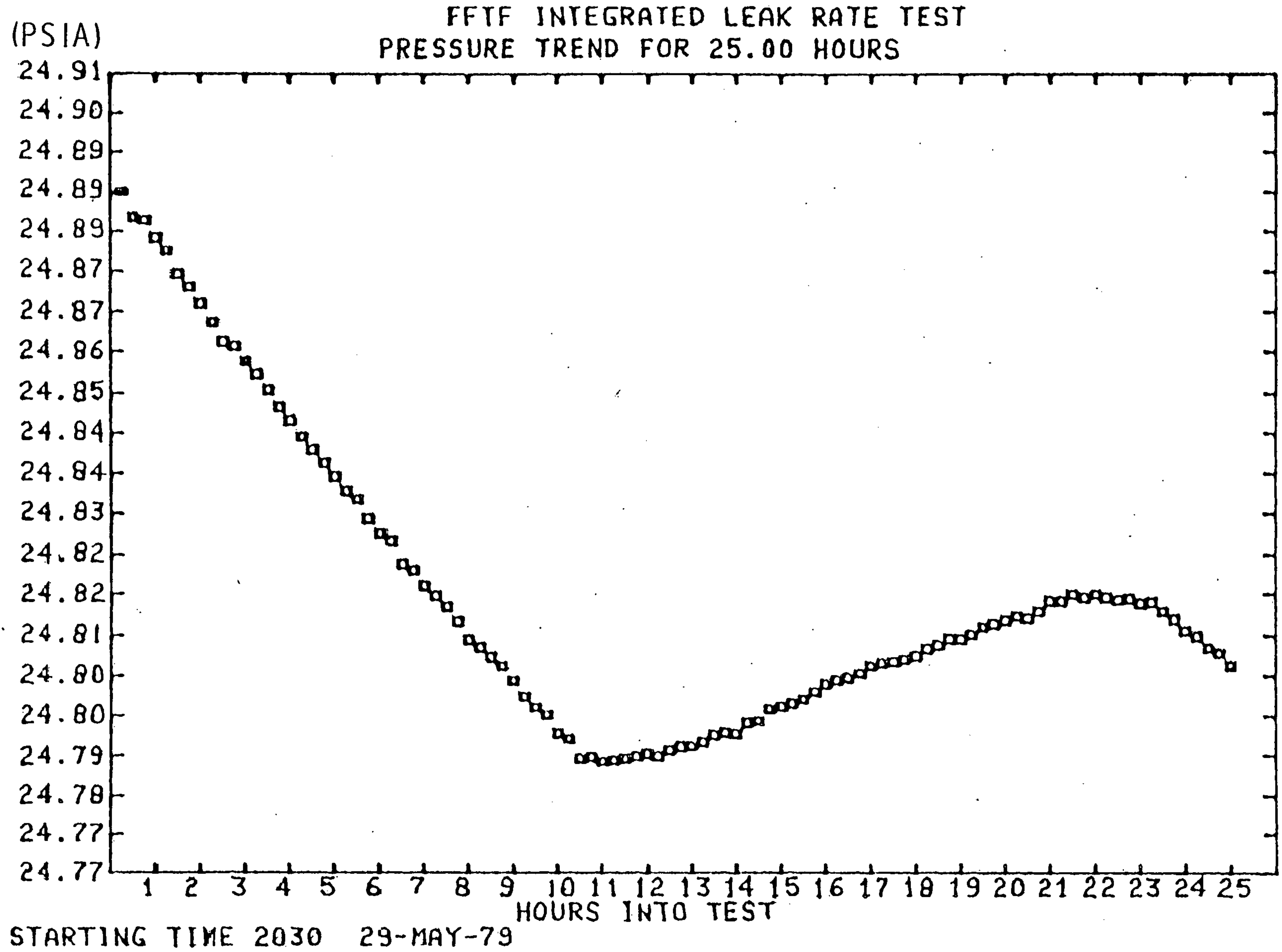

HEDL 7808-266.2

BASIC HEATING & VENTILATION COOLING SYSTEM

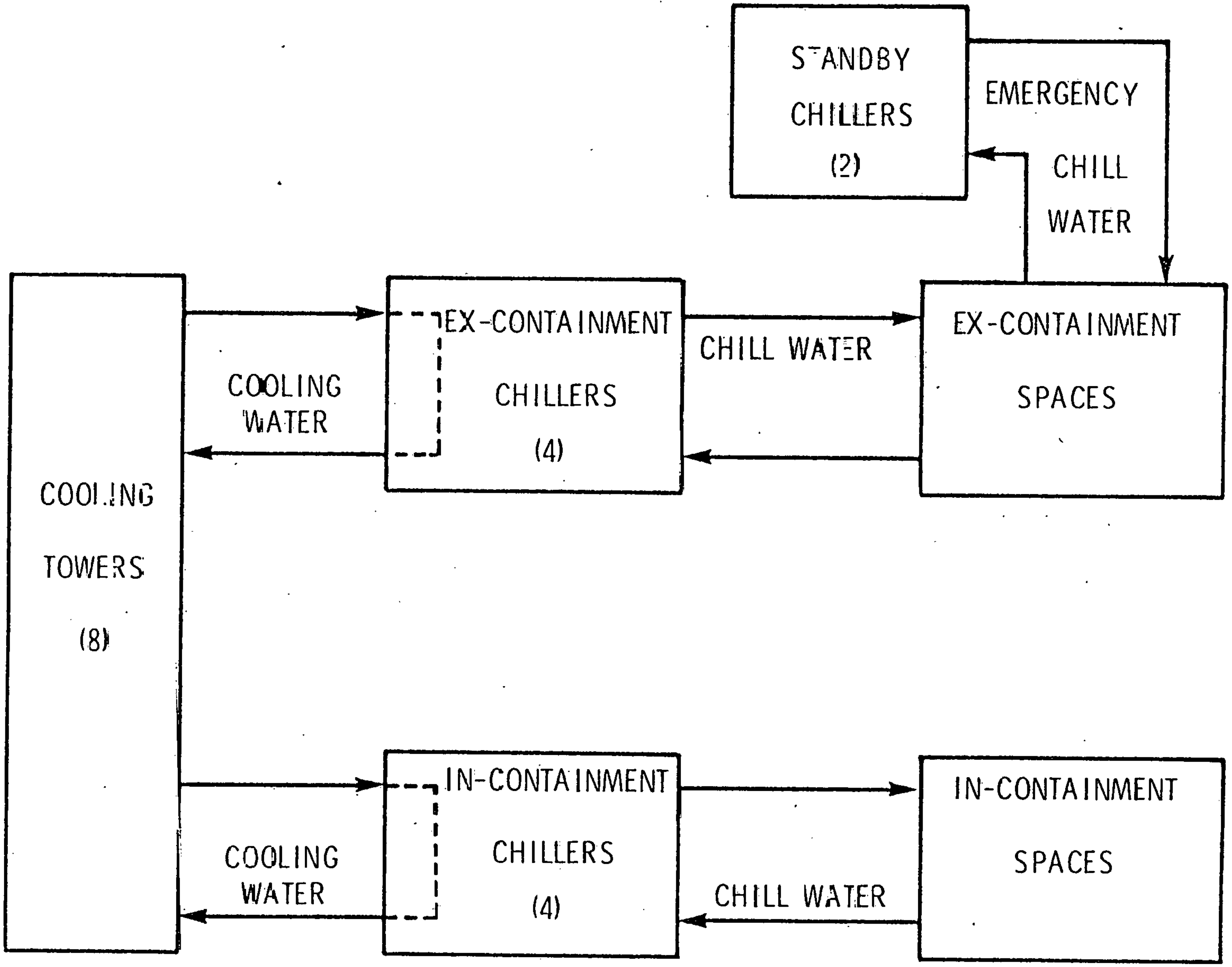

Figure 12

HEDL 7807-172.9

HTS SECONDARY LOOP DIAGRAM

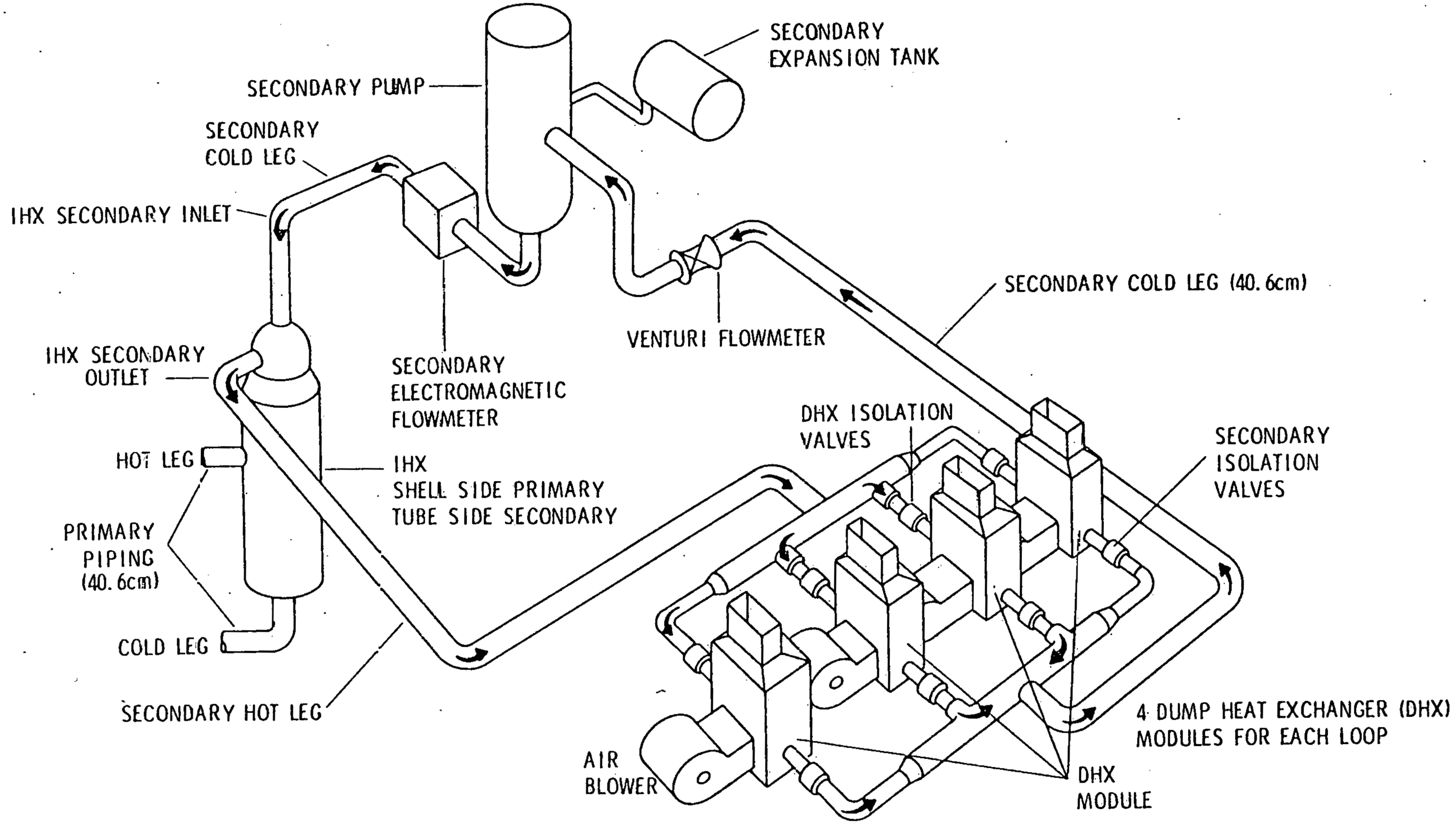

Figure 13

HEDL 7807-172.6

DUMP HEAT EXCHANGER PREHEATER

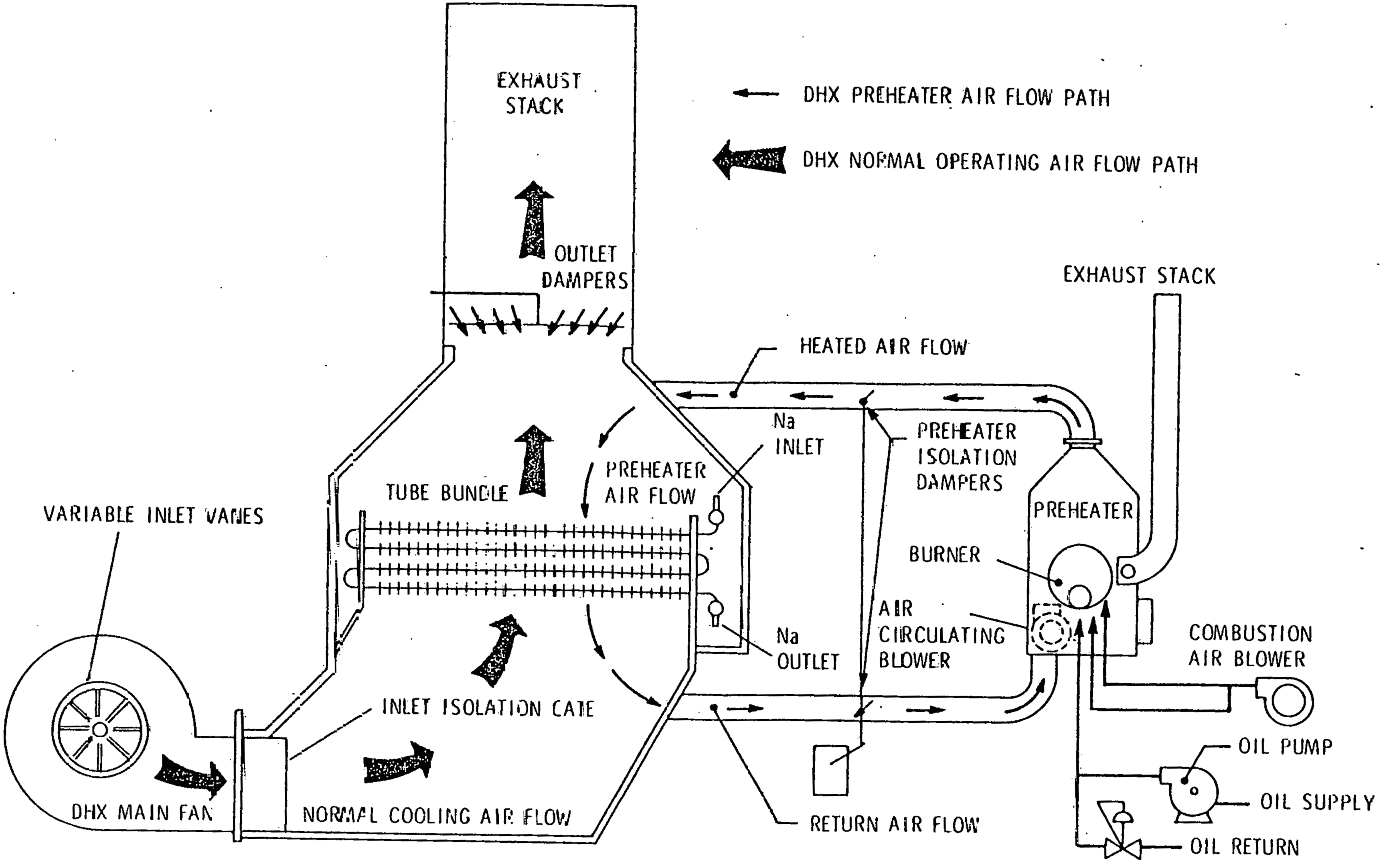

Figure 14

HEDL 7807-172.2

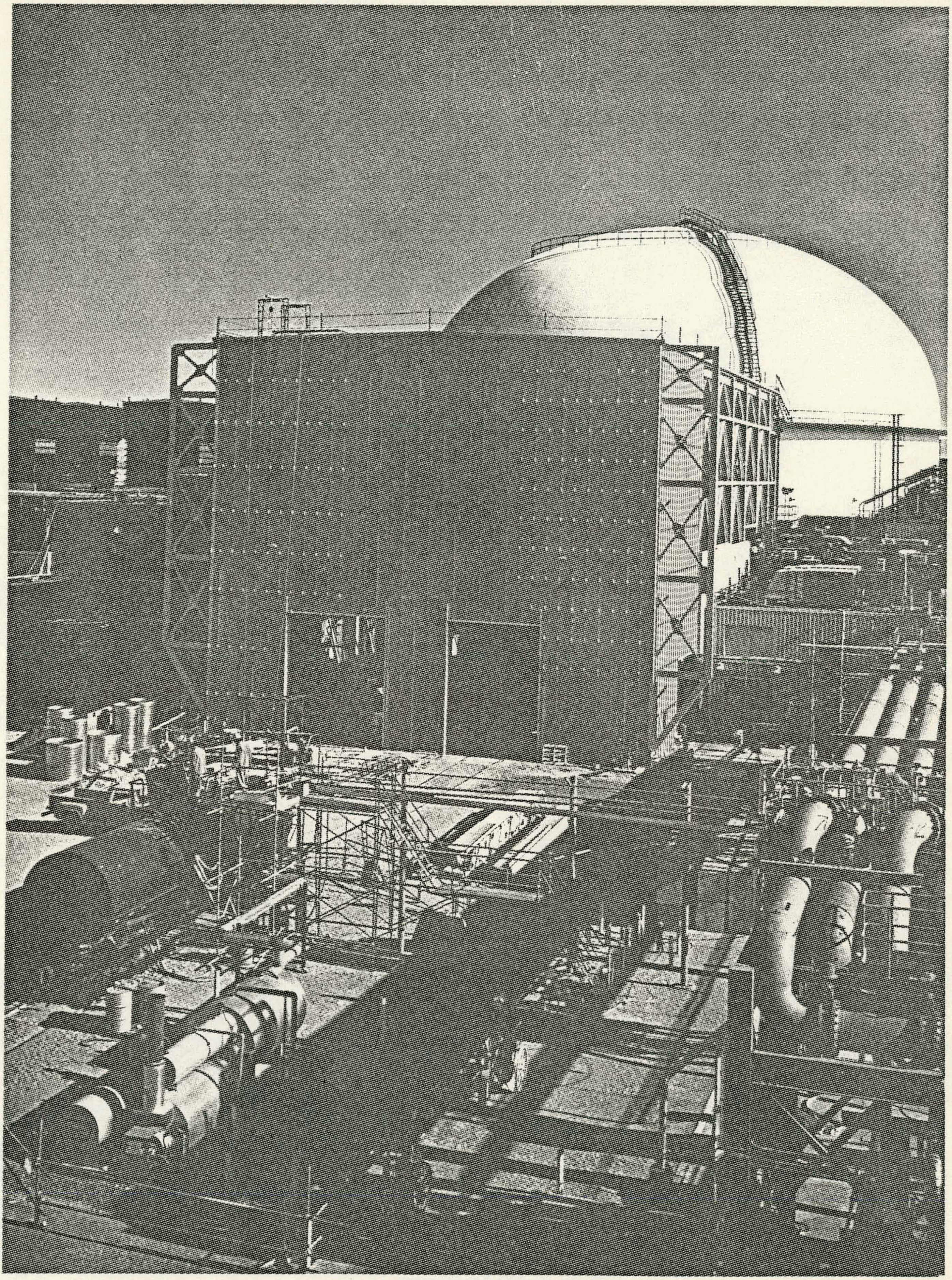

Figure 15

FFTF HOT OIL SYSTEM FOR HEATING SODIUM-FILLED TANK CARS

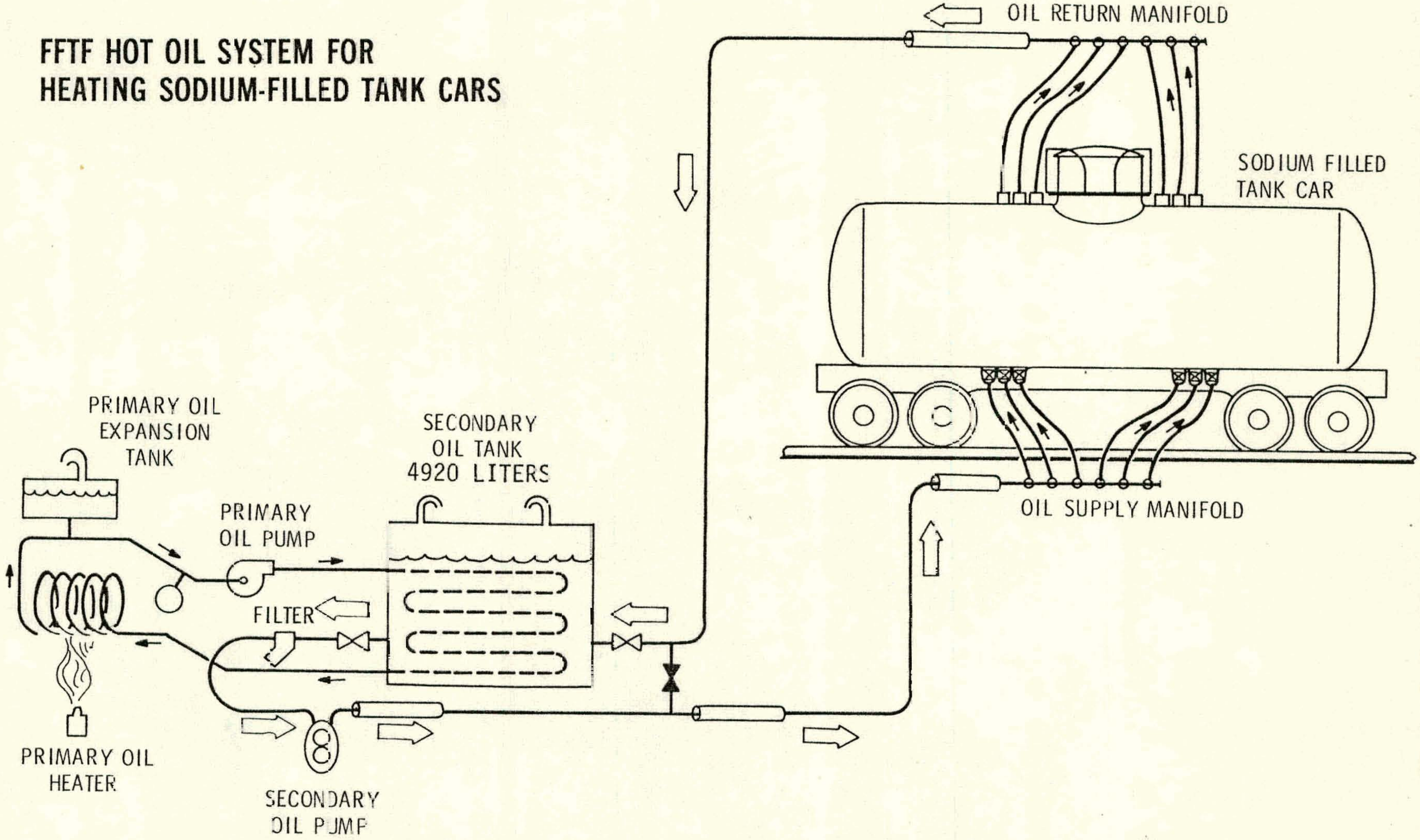

Figure 16

HEDL 7807-172.1

SODIUM FILL SYSTEM

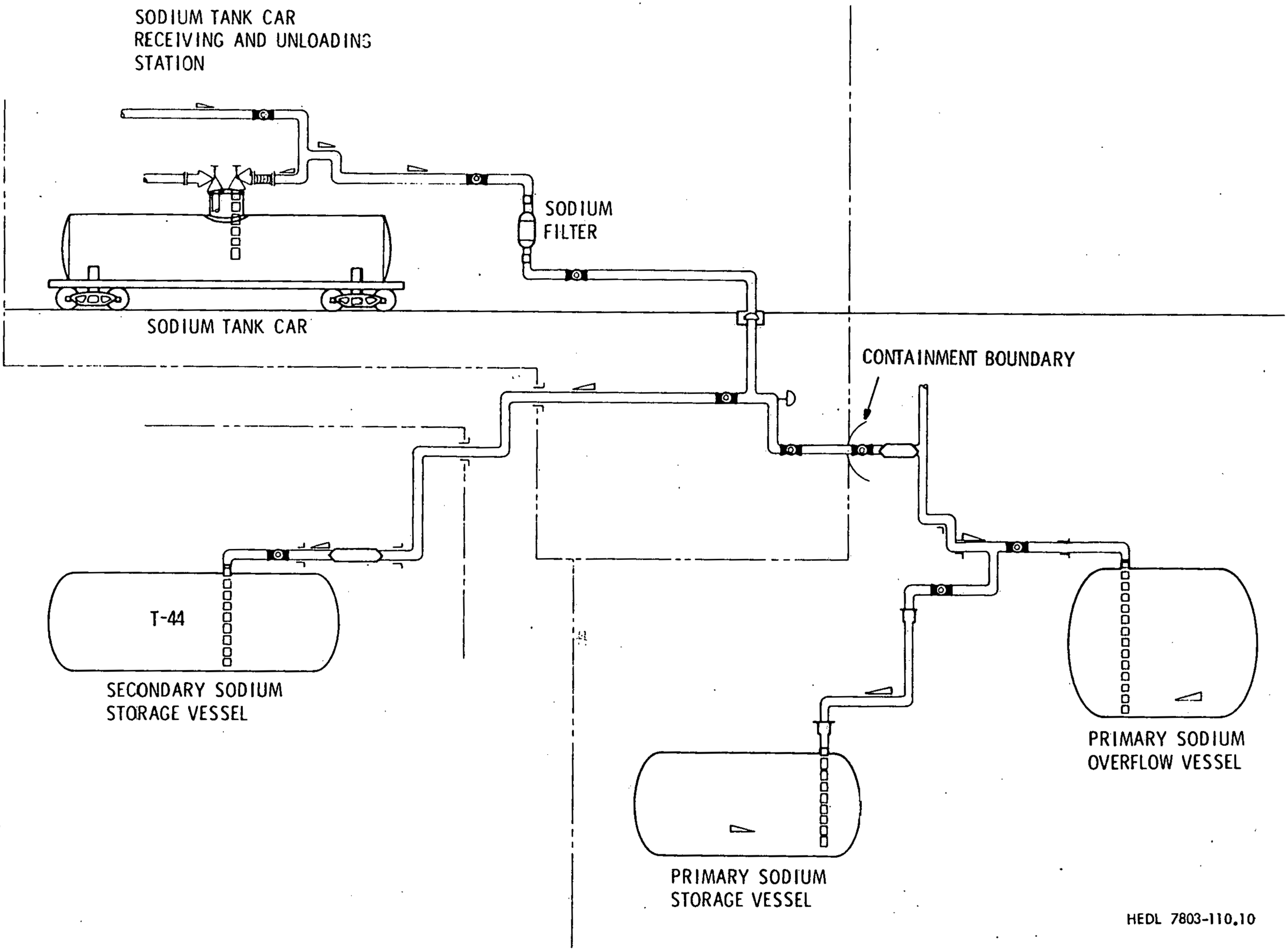

HEDL 7803-110.10

Figure 17

INTERMEDIATE HEAT EXCHANGER

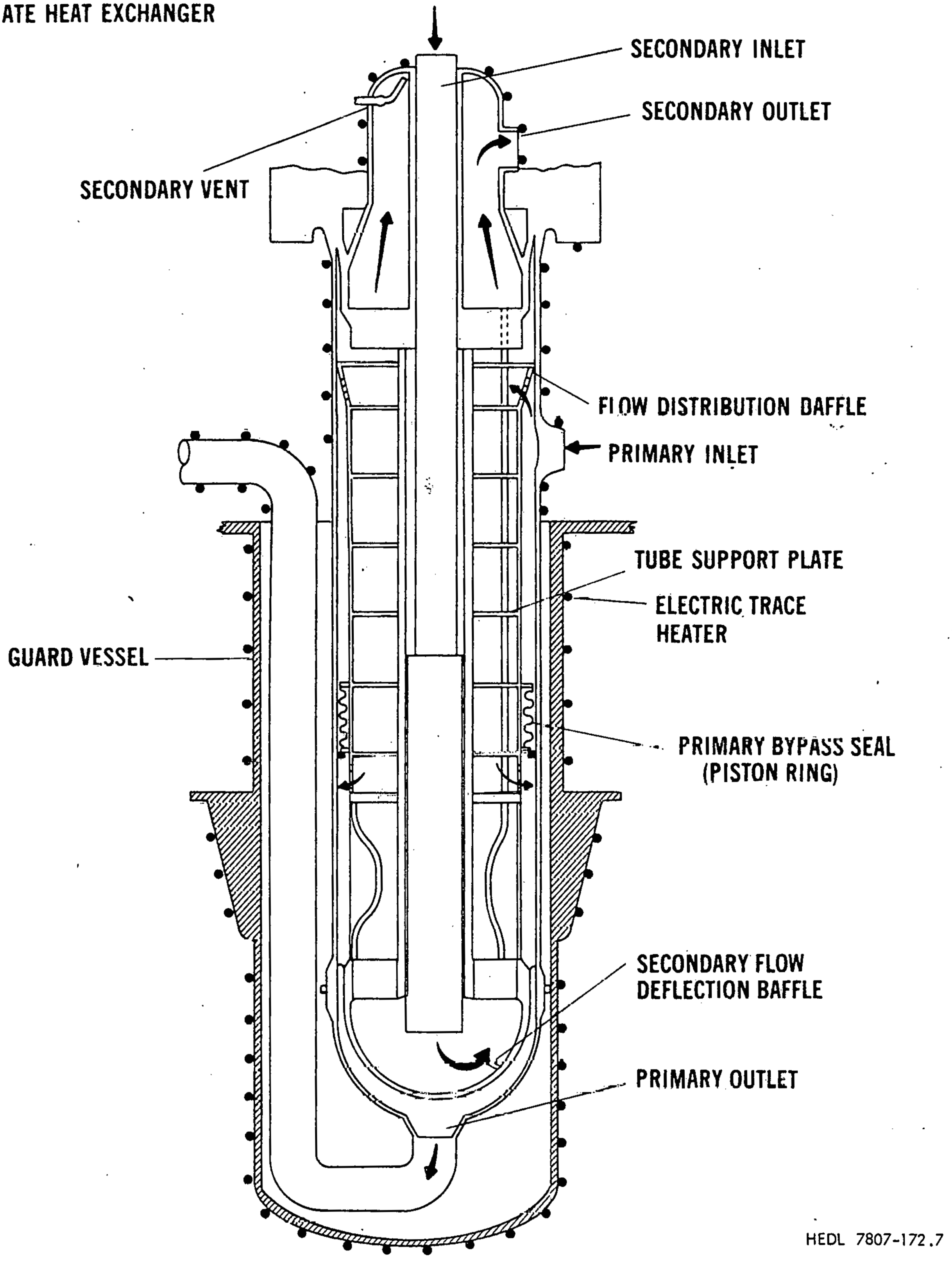

Figure 18

Figure 19

SECONDARY LOOP #3 FILLING THROUGH MULTIPLE DRAIN LINES BY PRESSURIZATION OF T-44

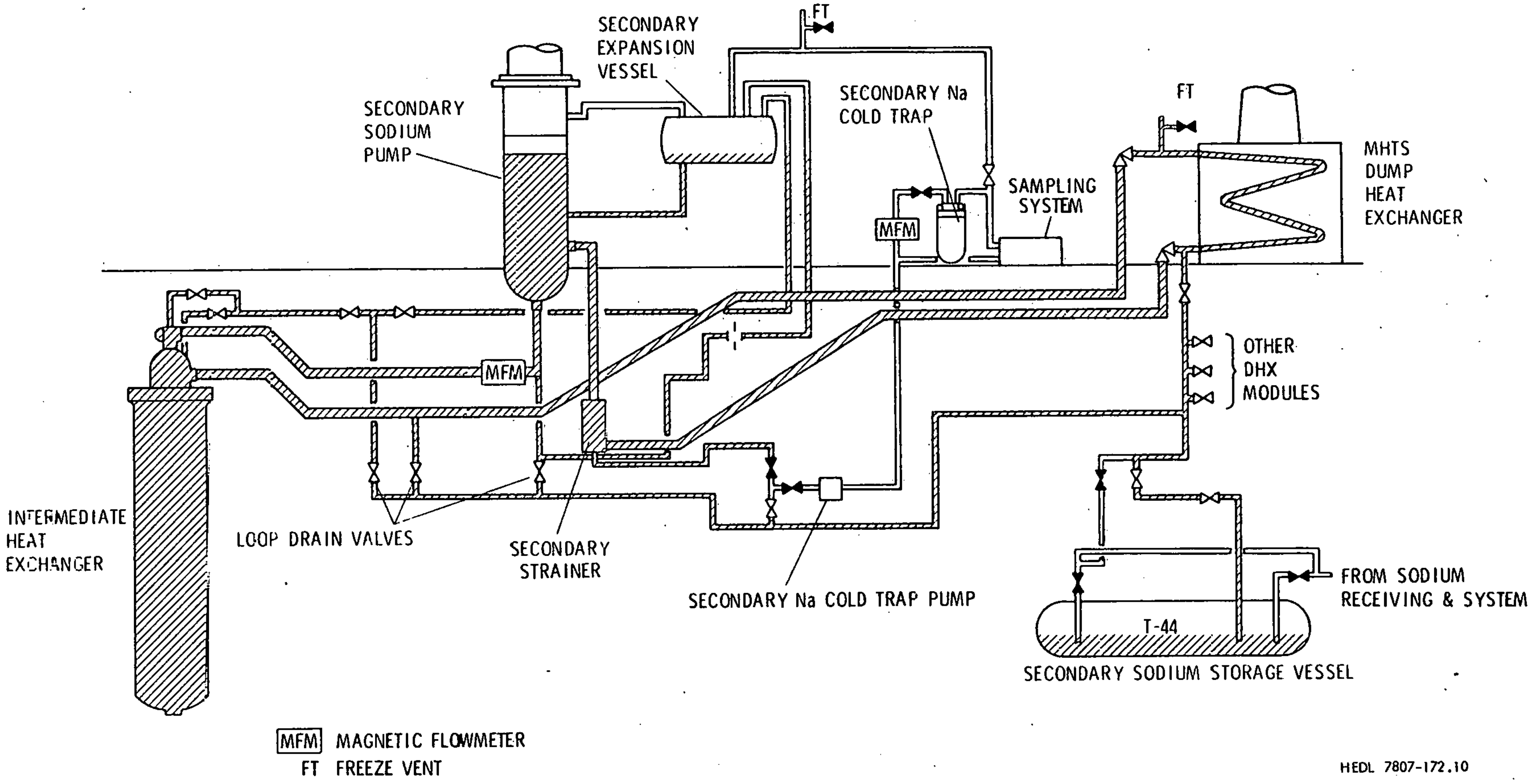

HEDL 7807-172.10

FUTURE TEST PROGRAM MILESTONES

• SODIUM FILL OF PRIMARY SYSTEM	DECEMBER 1978
• INITIAL CRITICALITY	AUGUST, 1979
• FIRST FULL POWER RUN	SEPTEMBER, 1979
• END OF TEST PROGRAM AVAILABLE FOR IRRADIATION TESTING	FEBRUARY, 1980

Figure 20