CONF--830485--3

UCRL--87700

DE83 014869

UCRL- 87700
PREPRINT

MASTER

USE OF FUSION-WELDING TECHNIQUES IN FABRICATION OF A SUPERCONDUCTING-MAGNET THERMAL-SHIELD SYSTEM

E. N. C. Dalder, J. H. Berkey, Y. Chang,
G. L. Johnson, G. H. Lathrop,
D. L. Podesta, and J. H. Van Sant

This Paper was Prepared for Submittal to
64th Annual Convention of the
American Welding Society Meeting
Philadelphia, PA
April 25-29, 1983

June 10, 1983

Lawrence Livermore Laboratory

This is a preprint of a paper intended for publication in a journal or proceedings. Since changes may be made before publication, this preprint is made available with the understanding that it will not be cited or reproduced without the permission of the author.

NOTICE
PORTIONS OF THIS REPORT ARE ILLEGIBLE.

It has been reproduced from the best available copy to permit the broadest possible availability. ONLY

DISTRIBUTION OF THIS DOCUMENT IS UNLIMITED

DISCLAIMER

This report was prepared as an account of work sponsored by an agency of the United States Government. Neither the United States Government nor any agency thereof, nor any of their employees, makes any warranty, express or implied, or assumes any legal liability or responsibility for the accuracy, completeness, or usefulness of any information, apparatus, product, or process disclosed, or represents that its use would not infringe privately owned rights. Reference herein to any specific commercial product, process, or service by trade name, trademark, manufacturer, or otherwise does not necessarily constitute or imply its endorsement, recommendation, or favoring by the United States Government or any agency thereof. The views and opinions of authors expressed herein do not necessarily state or reflect those of the United States Government or any agency thereof.

USE OF FUSION-WELDING TECHNIQUES IN FABRICATION OF A SUPERCONDUCTING-MAGNET THERMAL-SHIELD SYSTEM*

E. N. C. Dalder, J. H. Berkey, Y. Chang, G. L. Johnson,
G. H. Lathrop, D. L. Podesta, and J. H. Van Sant

Lawrence Livermore National Laboratory
University of California
Livermore, CA 94550

INTRODUCTION

The 750,000-lb. superconducting magnet set (Fig. 1) for the Mirror Fusion Test Facility (MFTF-B) (Fig. 2) was successfully tested at its full design conditions, demonstrating that large superconducting-magnet systems are now an available technology for magnetic-fusion energy (Ref. 1). The magnet set, shaped like two interlocking C-clamps, creates a magnetic field which is 150,000 times the average magnetic field at the earth's surface. This magnetic field is strong enough to contain hydrogen-isotope fusion plasmas. The magnet set and its associated ducting are shielded from thermal radiation by covering all its exterior surfaces with liquid-nitrogen-(LN_2)-cooled panels. The system requirements for the LN_2-cooled magnet shield system include (Ref. 1):

- Providing a low thermal emissivity, LN_2-cooled shielding for magnet system surfaces;
- Limiting combined leak rates of the thermal shield and magnet systems to 10^{-7} torr-liter He/sec;
- Providing a heat source for regenerating the magnet system surfaces;
- Restricting the heat load to the magnet case;
- Providing mechanical support for water-cooled shields, gas boxes, and plasma diagnostic instrumentation;

---

*Work performed under the auspices of the U.S. Department of Energy by the Lawrence Livermore National Laboratory under contract number W-7405-ENG-48.

DISTRIBUTION OF THIS DOCUMENT IS UNLIMITED

- Surviving the magnet and vessel seismic loading;
- Having a maximum working pressure of 90 psia (0.62 MPa);
- Surviving 1000 thermal cycles between room temperature and cryogenic conditions.

DESIGN OF THERMAL SHIELDS

Introduction

The magnet liners are thin panels which are convectively cooled inside by LN_2. They are connected to the LN_2 supply and return manifolds by small-diameter feeder tubes. The flow rates are high enough to carry away the heat load and still keep the panel near LN_2 temperatures.

The liner system must thermally shield all of the magnet system cooled by liquid helium (Figs. 3-5). This includes the magnet case (Fig. 3), magnet He supply and return ducts (Fig. 4), and current lead ducts. The liner system supplies LN_2 to the cooling cans integral to the support hangers for removal for 500 W of heat by conduction. The liners also serve as warm radiation sources for magnet/duct surface regeneration and magnet warm-up. Thus, the LN_2 liner system also operates with room-temperature, gaseous nitrogen (GN_2). Finally, the LN_2 liners are the attachment base for the liquid-cold-water (LCW) panels, their piping, and other equipment attached to the LCW panels.

The stayout zone around the magnets and ducting allocated for installation of LN_2 and LCW liners, supports, and manifolding ranged from 1 in. to 8 in. (25 mm to 203 mm). Figures 6 and 7 show the stayout zones for the magnet surface and ducting liners. The liner system allows for penetrations by the magnet support structure He supply and return ducting, current leads, and other subsystems. For ease of repair of LN_2 liner damage, they were sized for removability through the 2 ft (0.61 m) x 4.5 ft (1.14 m) vessel access doors. Since liner installation was done after the magnets were installed on a transporter, there is a size limitation imposed by the space available for installation on the magnets.

Design Requirements

Design requirements for the LN_2 liner panels fall into several categories: (a) structural, (b) seismic, (c) vacuum, (d) thermal, and (e) manufacturing/installation.

Structural loads fall into four major areas:

- LN_2 panel and piping weights;
- LCW panel and piping weights;
- Gas boxes and diagnostic weights; and
- Internal loads due to operating pressure.

The maximum expected seismic acceleration for components supported on the magnet is 1 g; for parts supported on the vessel, the maximum value is 1/4 g. The maximum operating pressure is 75 psig (0.62 MPa), based on a maximum LN_2 saturation temperature of 97 K.

The panels must operate in a vacuum vessel at pressures as low as 1×10^{-7} torr. Allowable leak rate per panel is less than 1×10^{-9} std cc He/sec.

The panel material must have a low magnetic susceptibility after multiple thermal excursions from 300 K to 77 K to avoid magnetically induced forces during magnet quenching. Because of required low leak rates, the material must be resistant to cracking during welding. Finally, the material must accept a surface treatment that provides a low thermal radiation emissivity.

To facilitate manufacture and installation, number and types of panels were minimized, while satisfying other requirements (Fig. 5). This is especially important in the panels installed around magnet penetrations, e.g., He ducting, current leads, and magnet hanger brackets (Fig. 4). Panels are supported on the magnets and must be installed on the magnets after the magnets are placed on the transporter (Figs. 8-9) inside the reactor building. Few main surfaces of the magnets are horizontal or vertical, making installation difficult (Fig. 9). Scaffolding or rigging could not be attached to liners, lest leaks be induced or panel supports be overloaded.

Operational requirements included the supply of the panels by subcooled LN_2 throughout the entire system, with LN_2 flow per unit panel area remaining relatively uniform. The design must permit enough cross flow within panels so that boiling will not "vapor lock" panels. Panels are designed so that each can be drained by gravity to allow quick replacement of LN_2 with GN_2 during magnet surface regeneration and to provide protection against freezing adjacent LCW panels in case of pump failure. Finally, sufficient temperature and pressure instrumentation must be provided for failsafe interlocks, thermal protection, and design verification.

Panel design criteria were kept sufficiently general so that all companies making heat transfer panels would competitively bid. Use of curved panels was limited to zones where flat panels are not possible. Both magnets are the same size and shape, with symmetrical lobes and ends. Thus each area has seven additional counterparts (Fig. 5). Panels designed for one area must fit seven other areas, except for local penetrations. Where magnet ducts, leads, or brackets projected through liners, feed-tube locations, and convective cooling areas for the eight symmetric areas were kept the same.

A typical panel layout is shown in Fig. 10. The 2 ft x 4.5 ft access doors in the vacuum vessel permit a 5-foot-wide (1.27 m) panel to pass diagonally through the door. Maximum length was set at 12 ft (3.05 m) by dimensions for the vessel and end-dome cryopanels. A one-inch margin was allowed around each panel for manufacturing tolerances in panels and magnets. Standoff distances were set by stayout zone and the possible presence of manifolding and LCW liners and ranged from 7/8 in. (22.2 mm) to 11 in. (279 mm)(Figs. 6-7). Space available for panels in the beveled areas of the magnet and the inner large radius is too small to accommodate both a LN_2 panel and a copper-clad, LCW-cooled panel, requiring the LN_2 shield to be cooled by conduction from adjacent panels. A small tube attached to the center of a high thermal conductivity material was used.

Feeder tubes were positioned on the panel to exit at its midplane. Within the small installation area allowed for manifolding, the tube outside diameter was 0.5 in. (12.7 mm) to maximize flow through feeder tubes, while permitting bending and welding with portable tools usable on the magnet transporter during installation. The 0.049" wall thickness was chosen to give the largest possible flow area, thus minimizing pressure loss and chances of plugging, while giving sufficient wall thickness for easy tube welding. Feeder tubes were designed to 12-in. (305 mm) lengths for ease of manufacture and shipping. At the feeder tube inlet locations, panels were cut back to permit manifold bending close to the panels to minimize interference between adjacent panels. Thin stayout zone requirements drove the maximum panel thickness to 5/8 in. (15.9 mm). Based on supplier information, structural requirements set a 1/16-in. (1.6 mm) panel sheet thickness for austenitic stainless steel.

Significant local boiling could cause vapor blockage shutting down LN_2 flow through a panel. This was avoided by designing panels for cross flow between internal channels. To balance the cross-flow level with requirements in panels made with discrete embossed channels, the minimum cross-flow requirement was set at 30% of the normal flow channel area. Internal flow guides were included to eliminate stagnant flow areas. These guides were needed where no preferred flow direction existed, such as in pillowed panels.

Specific panel requirements are given by a LLNL specification (Ref. 2), which includes previously discussed requirements and additional performance requirements verifiable at the factory. Panels were thermal cycled three times between 300 K and 100 K, followed by proof testing to 200% of operating pressure (150 psi, 1.24 MPa) without detectable leaks. Then panels were visually inspected for absence of permanent distortion. Finally, panels were vacuum leak checked with He to a maximum leak rate of 1 x 10^{-9} std cc He/sec.

Stainless steel sheet, 0.063 in. (1.6 mm) thick, Type 316L, with a maximum N_2 content of 0.06%, and a maximum ferrite number (FN) of 2, was used to make the panels. The GTA welding-consumable FN range was 1 to 5. Panel edges and seams were GTA fusion welded. Resistance welding was permitted only in panel interiors. Panels were electropolished to a No. 4 finish. The acceptance procedure for MFTF liner panels is given in Ref. 3. A synopsis of the panel manufacturer's QA results is given in Ref. 4.

DESIGN OF TUBE AND SHEET PANELS

Several panels were made as tube and sheet panels for cost reasons. These panels are made of 1/4 in.-thick (6.35 mm), Type 316L stainless steel plate with 0.5-in.-diameter (12.7 mm), Type 316L tubing. Calculations to check average surface temperature of these panels showed that an average temperature of 136 K was expected and would be acceptable.

LN_2 panels for the beveled region were the single tube and sheet type because of the thin stayout zone requirement. To assure a minimum heat load to the magnet, a Ni-plated, OFHC copper sheet with a LN_2-cooled, 0.5-in. (12.7 mm) o.d., Type 316L stainless steel tube torch-brazed to it was used.

DESIGN OF PIPING SYSTEM

The internal piping and manifolding supplied LN_2 and GN_2 to the liners for thermal shielding, surface regeneration, and magnet system warmup and cooldown. This subsystem must support its weight under a 1 g seismic load if on a magnet, or against a 0.25 g seismic load if attached to the vacuum vessel. Maximum operating pressures for the LN_2 system and LCW systems are 75 psig (0.62 MPa) and 125 psig (1.03 MPa), respectively. All piping and manifolding must leak no more than 1×10^{-9} std cc He/sec with an internal vacuum of 1×10^{-5} torr and must operate in a 1×10^{-7} torr external vacuum over a temperature range of 80 K to 300 K. Material requirements were satisfied by use of Type 316L stainless steel with controlled N_2, a maximum FN of 2.0 to balance the requirements of good weldability and good, low-temperature metallurgical stability.

Piping and manifolding design was modularized to facilitate preassembly. Because of an expected large number of tube welds in the manifold system (about 3000), orbital GTA tube welding of as few tube sizes as possible was selected (Ref. 5). Post-weld leak checking was done on modules, with a final leak check and pressure proof test reserved for the completed system. Thermal shocking with LN_2 was done as part of the system cooldown tests.

DESIGN OF MAGNET-TO-VESSEL LN_2 SUPPLY AND RETURN LINES

The LN_2 supply/return lines are made of 3-in. (76.2 mm) o.d. x 0.083 in. (2.11 mm) wall, Type 316L stainless steel tubing. These tubes were installed in two major sections, those in the end-dome region and those running from the end-dome region to the magnet manifold interface. Piping in the end-dome region was installed with vessel end-dome cryopanels, due to lack of access space near end-dome cryopanels.

LN_2 supply/return tubing was welded with orbital GTA tube welders during assembly. All tube bends greater than 15° used butt-weld elbow fittings to simplify assembly.

Expansion bellows, 3-in. (76.2 mm) end o.d. x 5-in. (127 mm) center o.d., were used to compensate for thermal contraction, magnet movement, and assembly alignment. Additional bellows were included in GN_2 lines for additional alignment capability. The maximum thermal expansion was 0.0025 ft/ft (0.0082 m/m) over the range of 300 K to 80 K .

Supply/return lines are supported off the vessel wall using the structure shown in Fig. 11. Pairs of support rings were provided for each bellow and for the ends of the subsection. Supports consisted of a 1/4-in.-thick (6.35 mm), Type 316 stainless steel angle attached to a ring made from Type G10 fiberglass composite and a Type 316 stainless steel spring. Rings were held to frames by Type 316 stainless steel threaded "U" bolt. Supports allowed for piping-sliding-axial motion and perpendicular spring-loaded motion. Thin spring and low thermal conductivity fiberglass minimized heat conducted from vessel walls to tubing. Ring portions of the supports were preassembled and final adjustments made in frame leg lengths at installation.

DESIGN OF PANEL-TO-PANEL MANIFOLDS

This manifolding had several special requirements. It is located above LN_2 panels or between LN_2 and LCW panels. For even flow distribution in panels, the pressure drop in manifolding is minimized by installing most panels in parallel and by maximizing the tube diameters. LCW system operating pressure (125 psig, 1.03 MPa) was the governing pressure criterion for both coolant systems. Thermal contraction during cooldown was taken up with bellows or excess tube length. Breakpoints in the design were used so that subassemblies could be prefabricated in a shop and installed on the magnet surface. The manifolding was split into six sections for each magnet.

For a maximum operating pressure of 125 psig (1.03 MPa) and a safety factor of 3.0, the minimum wall thickness vs. tube diameter for Type 316 stainless steel tube is shown in Fig. 12. Tube wall thickness was selected to simplify use of orbital GTA welding. Feeder tube size, 0.5-in. (12.7 mm) o.d. x 0.049-in. (1.25 mm) wall, was maximized within available space to give tube flexibility and maximum flow area. For 2-in. (50.8 mm) o.d. or larger tubing, butt-weld fittings were used to make bends. Bellows design pressure was 250 psig (2.06 MPa), so that the same bellows were able to be used for the LCW system. For proprietary bellows, the maximum extension for a unit made of Type 321 stainless steel, a 1000-cycle life, and a 6-in. (152 mm) convoluted length varied from 0.850 in. (21.6 mm) for a 3-in. (76.2 mm) i.d. bellow to 0.410 in. (10.4 mm) for a 1-in. (25.4 mm) i.d.bellow.

Bellows were made for a low leak rate requirement of 1×10^{-9} std cc He/sec and had machined cuffs to simplify joining to manifolding by orbital GTA welding. Initial production bellows were tested as follows: three samples of each size were thermal shocked three times by immersion in LN_2, He leak checked, and found to be leak tight. The remaining bellows were accepted on the basis of these tests. One production bellow leaked and was repaired by manual GTA welding.

Rapid, reliable assembly of the manifolding was accomplished by designing all welded joints for use of an orbital GTA welder, rather than manual welding. This required the use of butt-weld fittings designed for use with this welding process. In using orbital GTA welding, the number of welds triples, but the time per weld and the time for tube preparation decreased by more than a factor of 3. Increased reliability of each weld decreased the leak check times and repair, so the cost of the welders and fittings was justified.

Diameters, wall thicknesses and ovality of tubes and fittings were designed to be consistent with expected tubing dimensions. Large amounts of interaction and compromise between LLNL and the fitting supplier was required to achieve acceptable fitting designs.

Supports for the shields are fabricated from NEMA G-10 fiberglass-epoxy composite. Each support is fastened to the magnet with four stud-welded bolts and attached to the panels with one bolt. Each panel has four supports, and each suport contributes less than 0.1 W heat transfer to the magnet (Ref. 6).

ASSEMBLY OF LN_2 AND LCW LINERS ON THE MAGNET SURFACES

Assembly began with shop preassembly of manifolding modules, including shop vacuum leak checking with He, followed by preparation of manifold supports. Shop preassembly of panel supports was accomplished, followed by predrilling of panel edges for installation of anti-shine-through assemblies (Fig. 13). Next, panel installation location reference lines were put on magnet surfaces, followed by layout of the prefabricated panel templates and marking of panel support locations.

Panel support mounting studs were located and installed by stud welding using a Nelson stud welder and Type 304 stainless steel studs (Fig. 14). Then magnet surface, panel supports, and panels were wiped clean using MEK-saturated cloths, and panel supports were installed.

Panels were then prepositioned on the magnet surfaces to check required feeder tube bends, anti-shine-through shield width, and required support shims. Feed tubes were bent in the field; required shims were added to supports; anti-shine-through shields were attached. Next, the completed panel was installed, and final adjustments were made.

After installation of a series of panels, called a "panel module", local manifolding modules were cleaned, fitted on the side of the magnet, and installed. Final welds on manifolding and feeder tubes were made using orbital GTA tube welders. Ends of open tubes were plugged and liner modules were bagged in polyethylene for vacuum leak checking and surface contamination control.

More than 3,000 welds that joined lengths of tubing to each other and to panels were made using the gas-tungsten-arc (GTA) process. Two semiautomatic orbital GTA units were used to fabricate manifold subassemblies. This method provided a rapid and reliable process for making weld joints in tubing ranging from 1/2-in. (12.7 mm) to 3-in. (76.2 mm) diameter.

Manual GTA welding was used to weld some of the joints while installing panels and modules on the magnets. The more reliable orbital GTA process was preferred for making all tube joint welds, but limited clearances between piping and panels on the magnets sometimes left insufficient space for the orbital weld head in some locations. High levels of weld leak tightness and structural integrity is required during operation. The initial acceptance rate of the orbital GTA welds was more than 98% and of the manual GTA welds, more than 96%, as determined by vacuum leak checking of modules at 10^{-5} torr to assure a combined He leak rate less than 1 x 10^{-9} std cc He/sec. Leak-check tubes were plugged by manual GTA welding with Type ER316 filler wire, and results of leak checking were recorded on QA records. As welding and leak checking of multiple modules was completed, orbital GTA welding of interface joints was accomplished and vacuum leak checking was repeated.

Upon completion of assembly for one magnet, the entire assembly was bagged, and a final leak check was performed. A required maximum allowable leak rate of 1 x 10^{-9} std cc He/sec was attained.

For cleanliness, installation of the panels began at the top of each magnet and proceeded downward. Routing of instrumentation leads along magnet surfaces required that selected panels not be installed until all leads in a given area were attached, which made panel installation much more difficult.

Installation of panels was completed using scaffolding described in Figs. 15-17. Installation of manifolding proceeded from the top of the magnet down. Installation of manifolding for a given panel module began after all panels in the module were installed.

Module leak checks were done during installation at appropriate intervals to optimize leak evaluation. A Varian He Mass Spectrometer was attached to the appropriate manifold leak-check port with a reusable vacuum coupling. The module was evacuated to 10^{-5} torr, and the leak rate was measured for a minimum of five minutes. The maximum acceptable leak rate was 1 x 10^{-9} std cc He/sec.

If the leak rate was higher than the allowable value, the leak test was repeated on module subsections. If the leak rate was still excessive, an He probe was used to check all welds made since the last successful check. Upon locating of the leaking weld(s), repairs were made by either orbital or manual GTA welding, depending upon the accessibility of the weld(s).

ASSEMBLY AND INSTALLATION FOR 3.0-in. (76.2 mm) o.d. LINER SUPPLY/RETURN PIPING

Piping modules were preassembled, orbital GTA welded, and vacuum leak checked with He. Then, the piping supports were preassembled. Beginning at vacuum vessel port covers, the guard vacuum lines and LN_2 lines with the support rings in place were positioned and tack welded with the manual GTA process using Type ER316L filler wire. Next, the support frames were positioned, trimmed to size, and welded to the vacuum vessel wall by manual GTA welding. Then, the piping and support rings were attached to the frames.

Final tube welds were made by the orbital GTA process, and the system was leak checked at the magnet interface. Finally, weld connections at magnet and He ducting interfaces were made by orbital GTA welding, and the final system leak check was carried out.

STUD-WELDING DEVELOPMENT AND QUALITY ASSURANCE

More than 4,500 stud-welded bolts were used to attach panel supports to magnet surfaces. Using 1/4-in. (6.35 mm) diameter, Type 304 stainless steel bolts, a stud welding schedule was developed which produced over 100 samples that withstood 160% of the design torque. During installation, studs were proof tested by torquing to 100% of design torque. The rejection rate was less than 1%. Repairs were made by spot grinding the magnet surface and welding another stud in the same location, with a zero rejection rate. Load tests of bracket and stud-welded assemblies showed that the assembly could support a 1,000-pound (4448 N) compression load and 500-pound (2224 N) side load, providing a safety factor of above 4. At the beginning of each shift, the stud welder was checked by welding four studs to a stainless steel plate. Torque testing of the studs was required to demonstrate that all studs would withstand tension corresponding to 75-in./lb. (84.73 N-M) torque. If the weld on any of the four studs failed at 75-in./lb. (84.73 N-M) torque or less, the stud welder was checked per Nelson's Stud Welder Operation Manual for adjustment on the chuck, voltage setting, or current setting.

At the completion of installation, the entire magnet liner system was air pressurized to 150 psig (1.24 MPa) for 24 hours, and visual inspection was performed for obvious damage or deformation. Then the entire assembly was depressurized to 10^{-5} torr and leak checked by the helium-bag-check method described above.

SUMMARY AND CONCLUSIONS

Success of the thermal shield system was demonstrated by the results of acceptance tests performed with the magnet and all its ancillary equipment. During these tests the thermal shield system was:

- Thermally cycled several times from 300 K to 77 K;
- Pressure cycled several times from 0 to 5 atmospheres;
- Operated for more than 500 hours at 77 K and in a vacuum environment of less than 10^{-5} torr;
- Operated in a magnetic field up to 6.0 Telsa;

- Exposed to a rapidly collapsing magnetic field of more than 250 gauss per second;
- Drained of all LN_2 in a few minutes, without any weld failures.

The successful (and relatively problem free) operation of the magnet system validates the choice of the welding processes used, as well as their execution in both shop and field environments.

References

1. Henning, C. D., et al., "Mirror Fusion Test Facility Magnet System - Final Design Report," Lawrence Livermore National Laboratory, Livermore, CA, UCRL-52955 (1980).
2. Johnson, G. L., Specification MEL79-001472E, Lawrence Livermore National Laboratory, Livermore, CA (1979).
3. Johnson, G. L., Report on LLNL Inspection for Paul Mueller Panels Manufactured for the Magnet Liner System, Lawrence Livermore National Laboratory, Livermore, CA (1980), unpublished report.
4. Johnson, G. L., On-Site Q.A. Procedures for Magnet Liner Panels Manufactured by P. Mueller Company, Lawrence Livermore National Laboratory, Livermore, CA (1980), unpublished report.
5. Ritchie, D. G., "Mechanized Orbitor Pipe Welding and People," talk presented at Annual Meeting of AWS, Los Angeles, CA, 1980.
6. Chang, Y., "MFTF LN_2 Panel Support Design Notes," Lawrence Livermore National Laboratory, Livermore, CA, ENG-81-3 (1981).

DISCLAIMER

This document was prepared as an account of work sponsored by an agency of the United States Government. Neither the United States Government nor the University of California nor any of their employees, makes any warranty, express or implied, or assumes any legal liability or responsibility for the accuracy, completeness, or usefulness of any information, apparatus, product, or process disclosed, or represents that its use would not infringe privately owned rights. Reference herein to any specific commercial products, process, or service by trade name, trademark, manufacturer, or otherwise, does not necessarily constitute or imply its endorsement, recommendation, or favoring by the United States Government or the University of California. The views and opinions of authors expressed herein do not necessarily state or reflect those of the United States Government thereof, and shall not be used for advertising or product endorsement purposes.

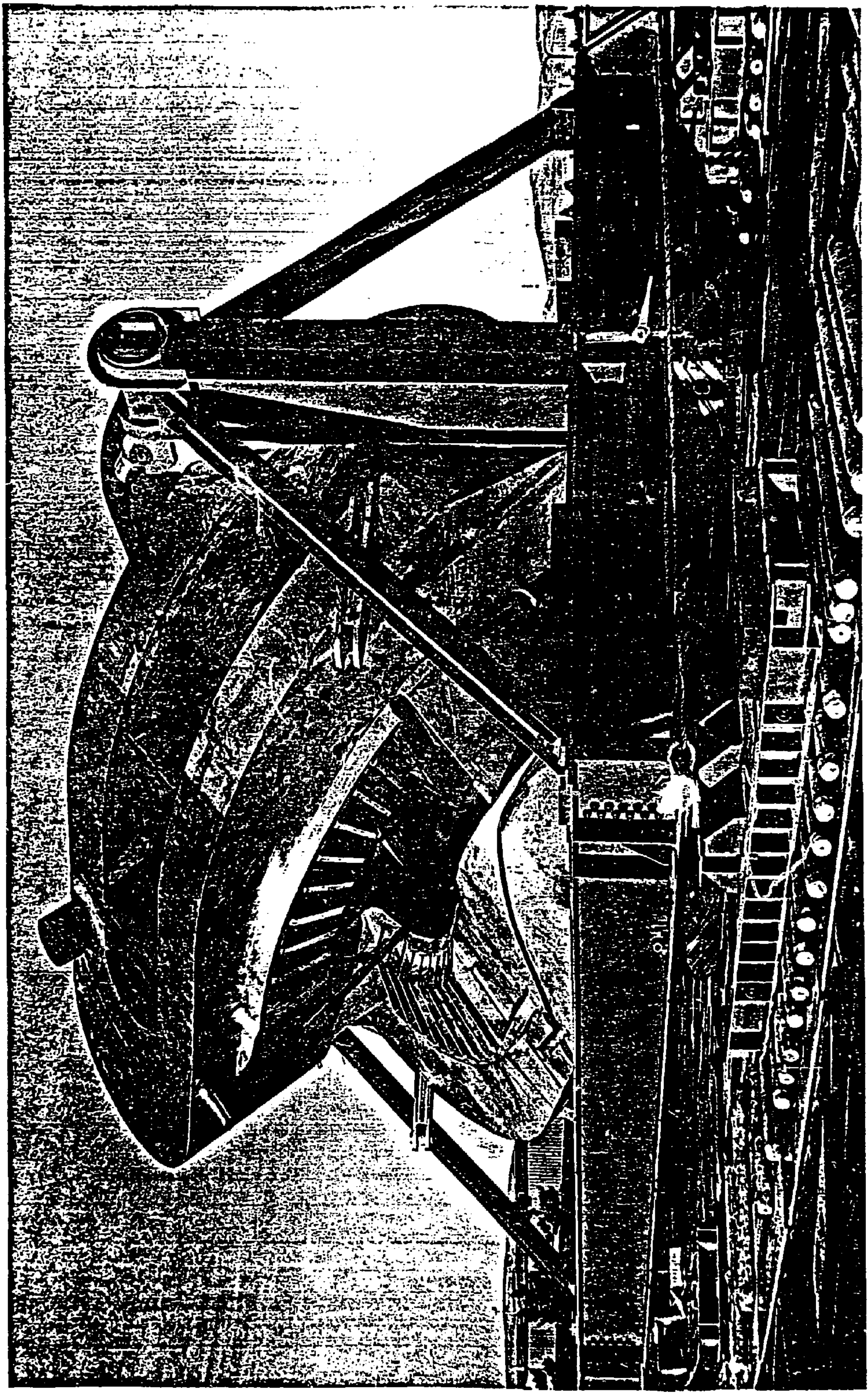

MFTF-B

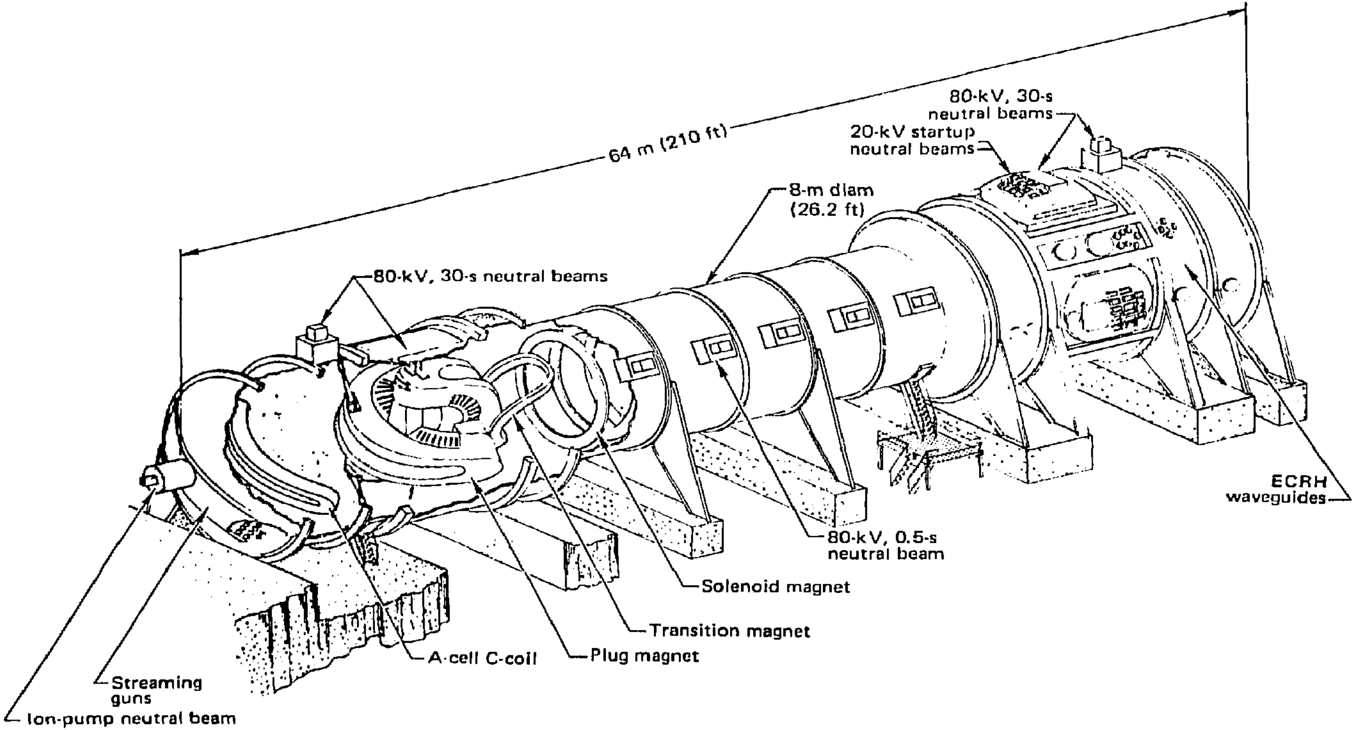
64 m (210 ft)
80-kV, 30-s neutral beams
20-kV startup neutral beams
8-m diam (26.2 ft)
80-kV, 30-s neutral beams
ECRH waveguides
80-kV, 0.5-s neutral beam
Solenoid magnet
Transition magnet
Plug magnet
A-cell C-coil
Streaming guns
Ion-pump neutral beam

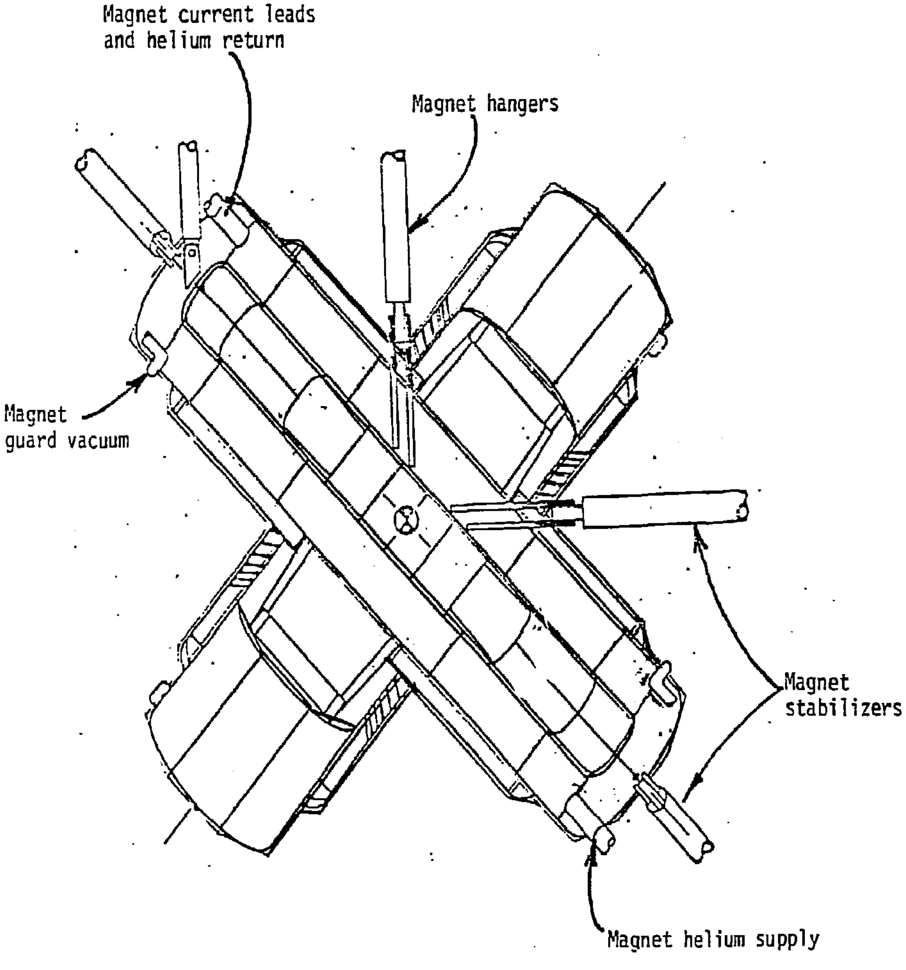

(Front view)

Figure 3. The magnet liner system is installed over the entire surface of the magnet.

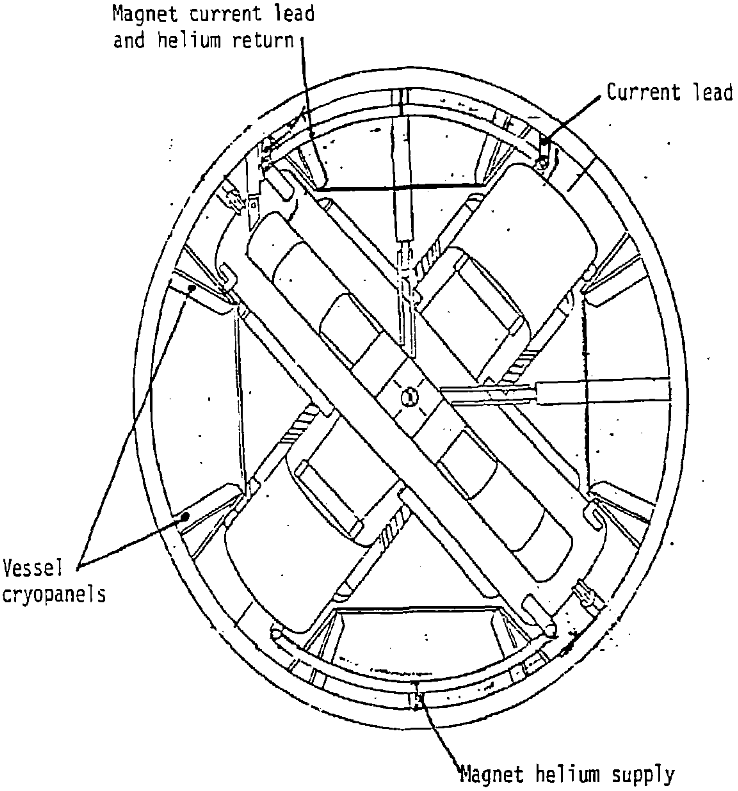

Figure 4. The magnet liner system also covers the magnet helium supply and return pipes and current lead pipes.

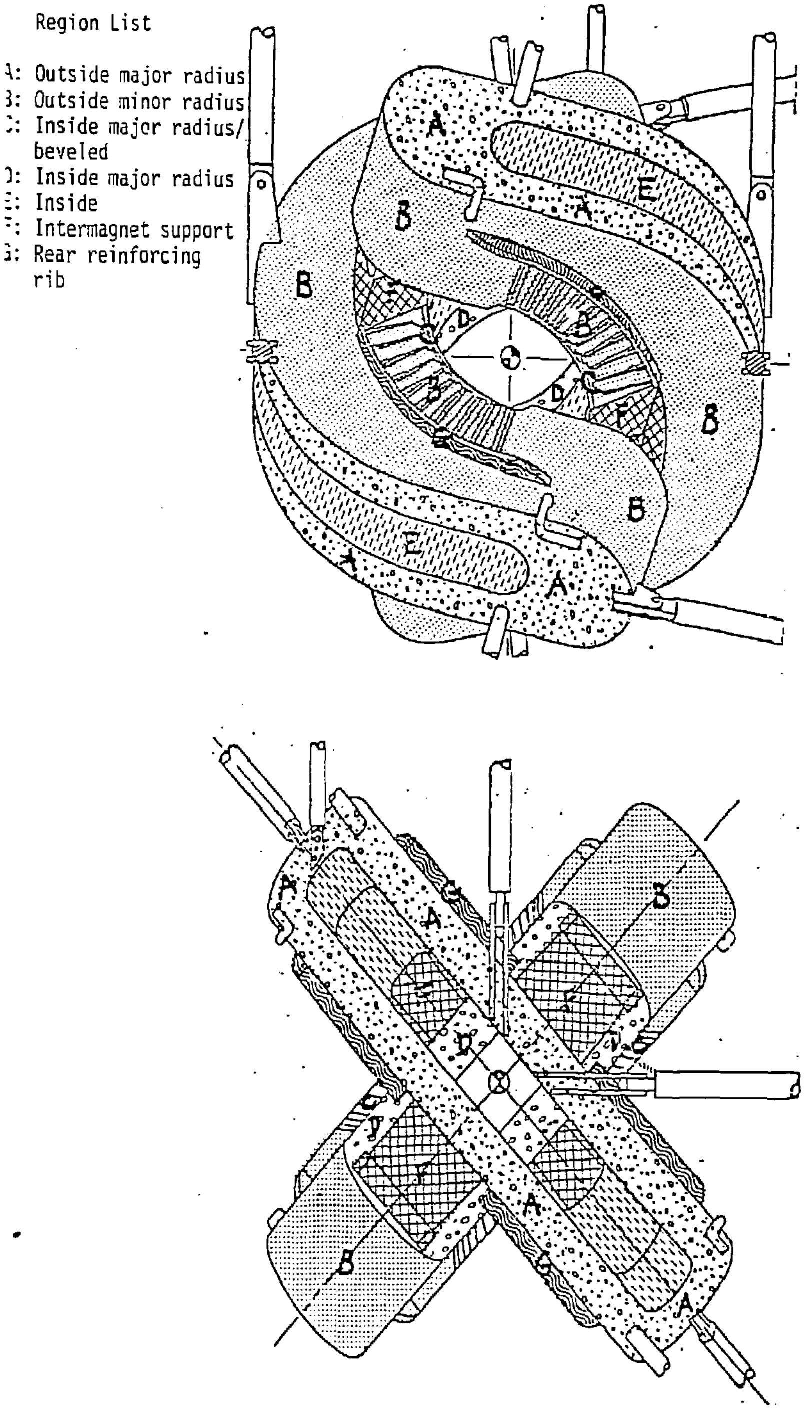

Figure 5. There are seven major liner paneled regions on the magnet

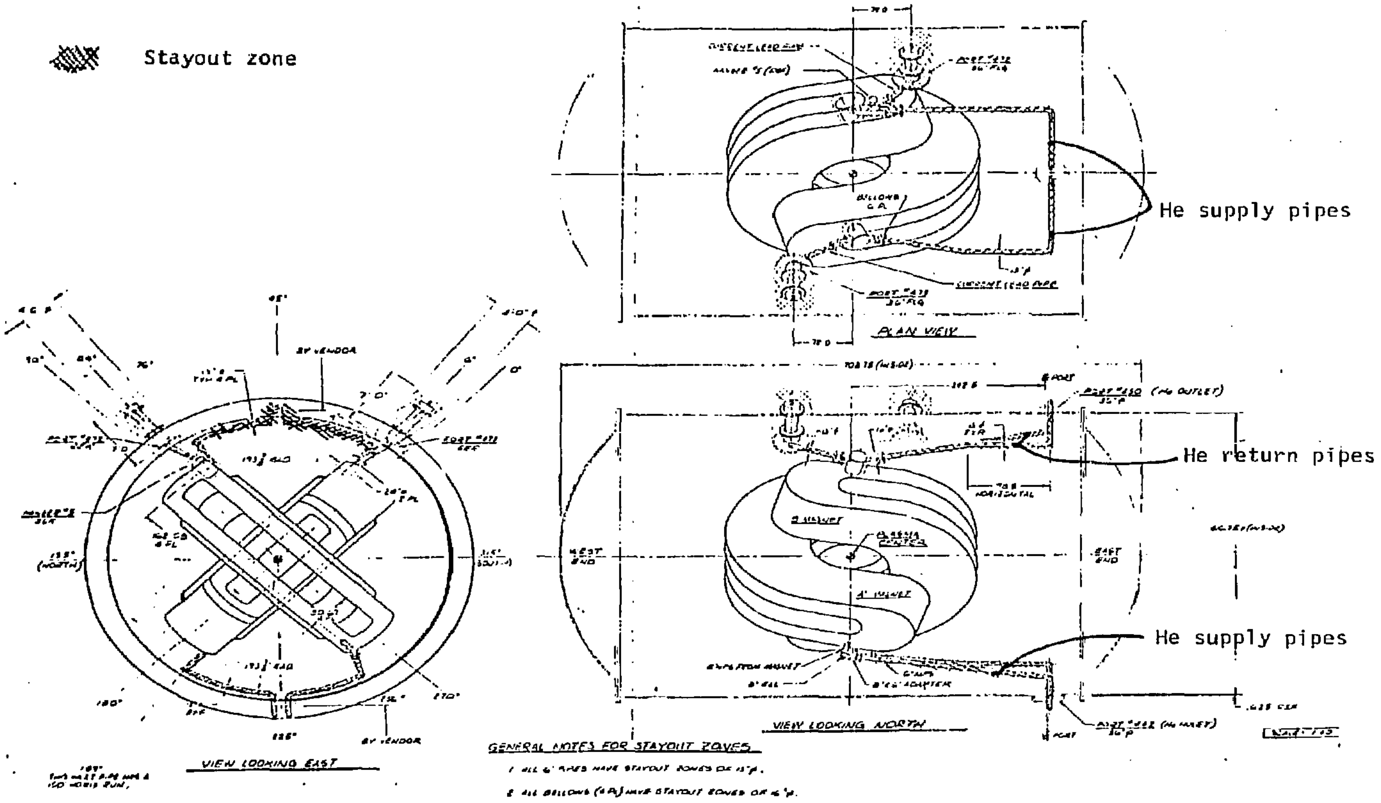

Figure 6. The stayout zone for the magnet liner system on the magnet He piping and current lead ducts allows approximately 3" of space around the circumference.

Original Minimum Stayout Zone Requirements

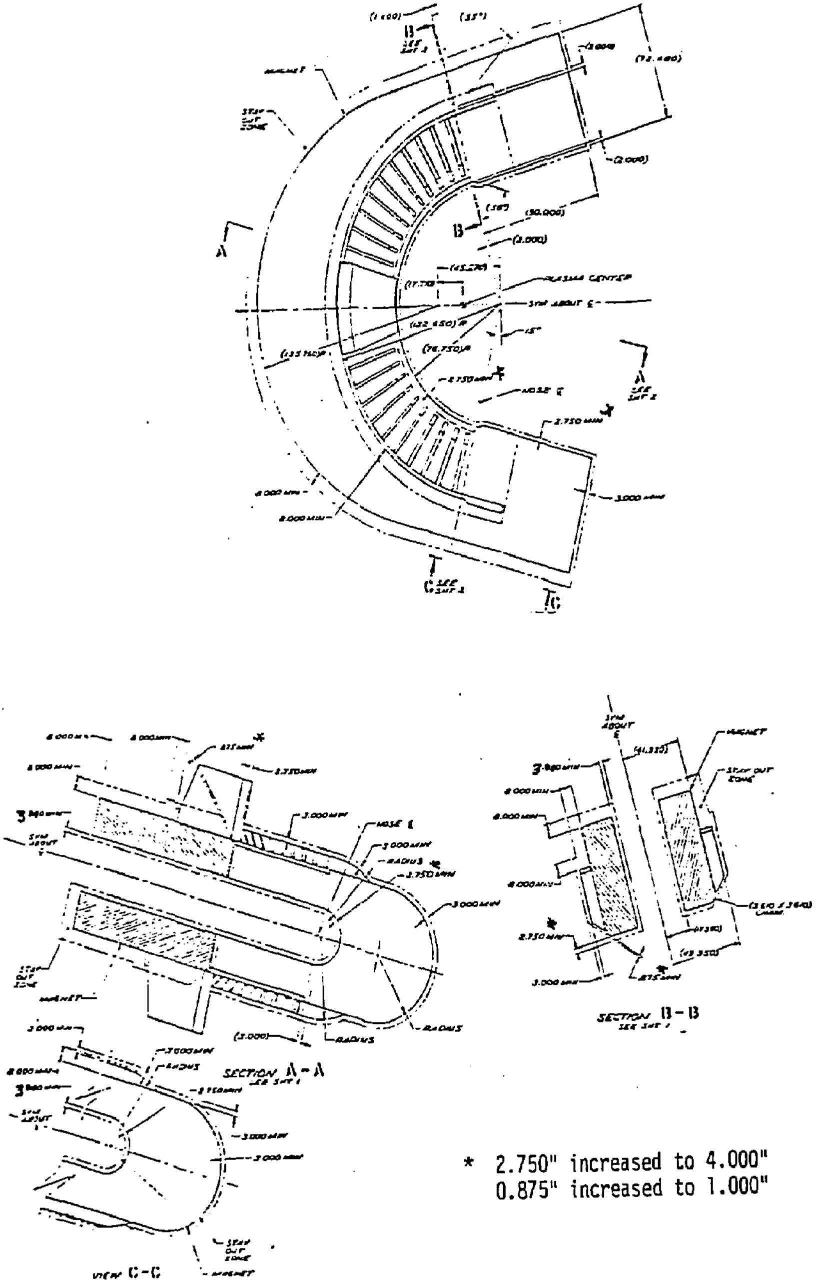

* 2.750" increased to 4.000"
0.875" increased to 1.000"

Figure 7. One stayout zone for the magnet liner system is a thin region surrounding the magnets, ranging 1" to 8" in thickness.

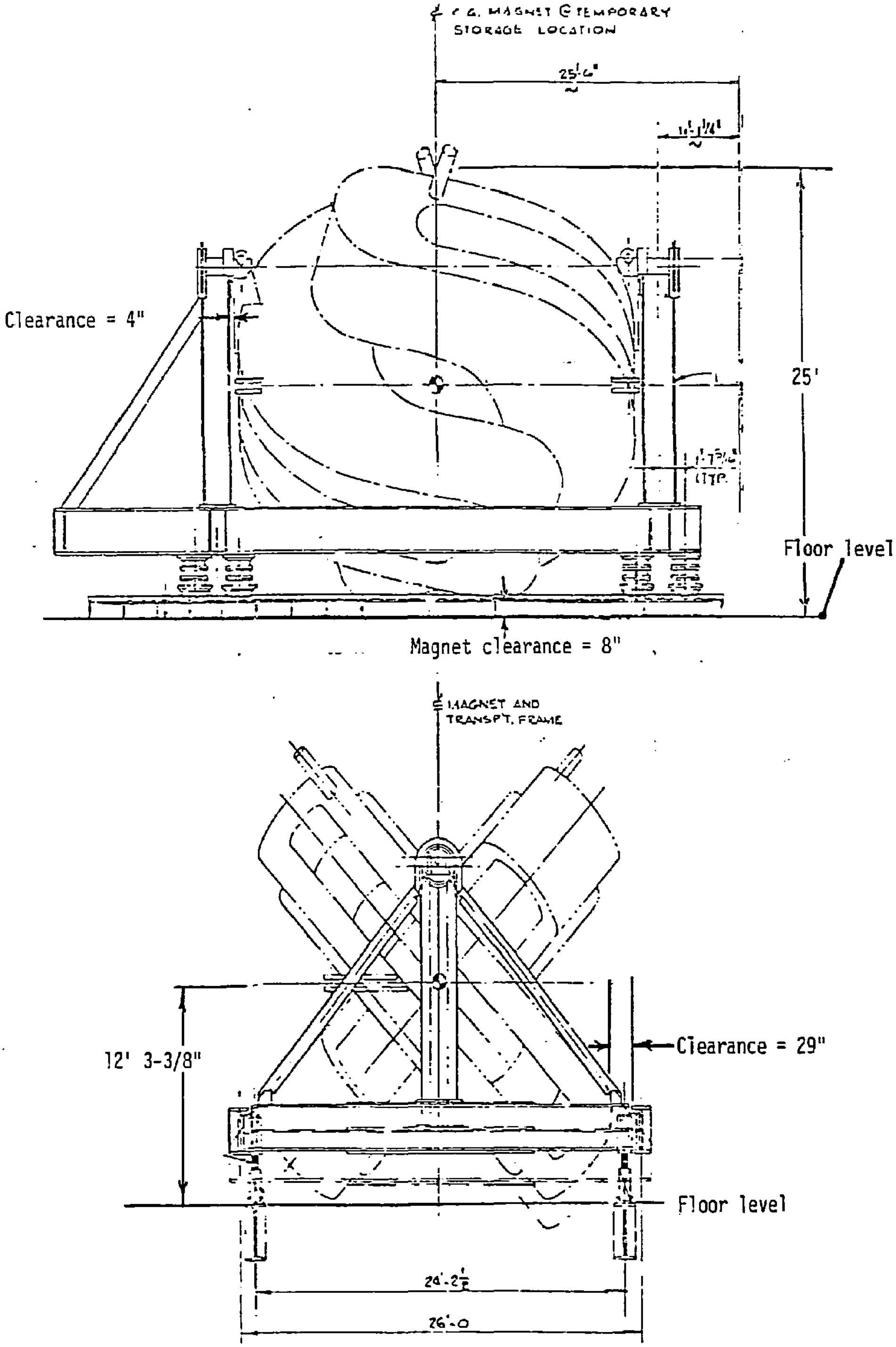

Figure 8. All magnet surface panels are installed while the magnet is in place on the magnet transporter.

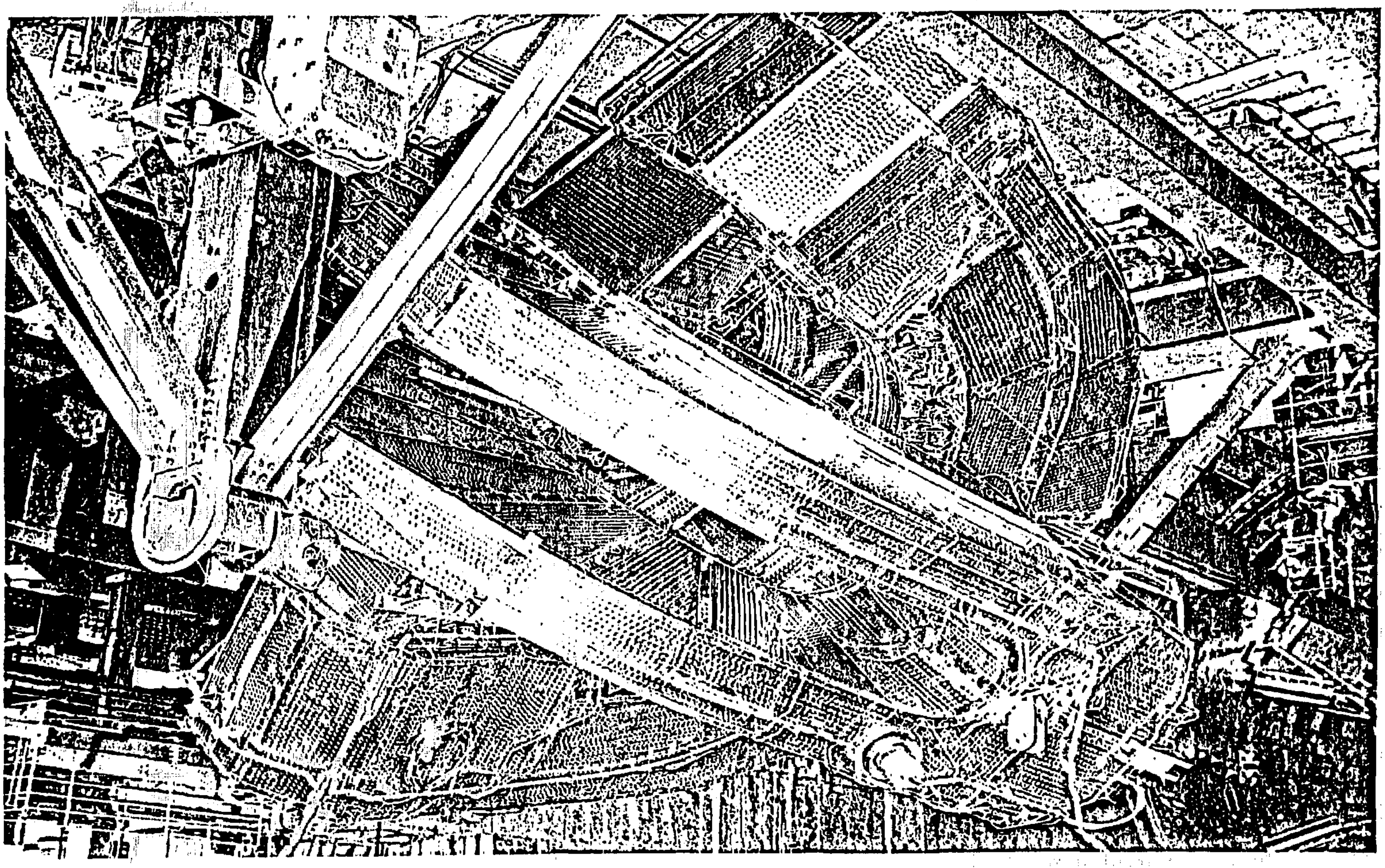

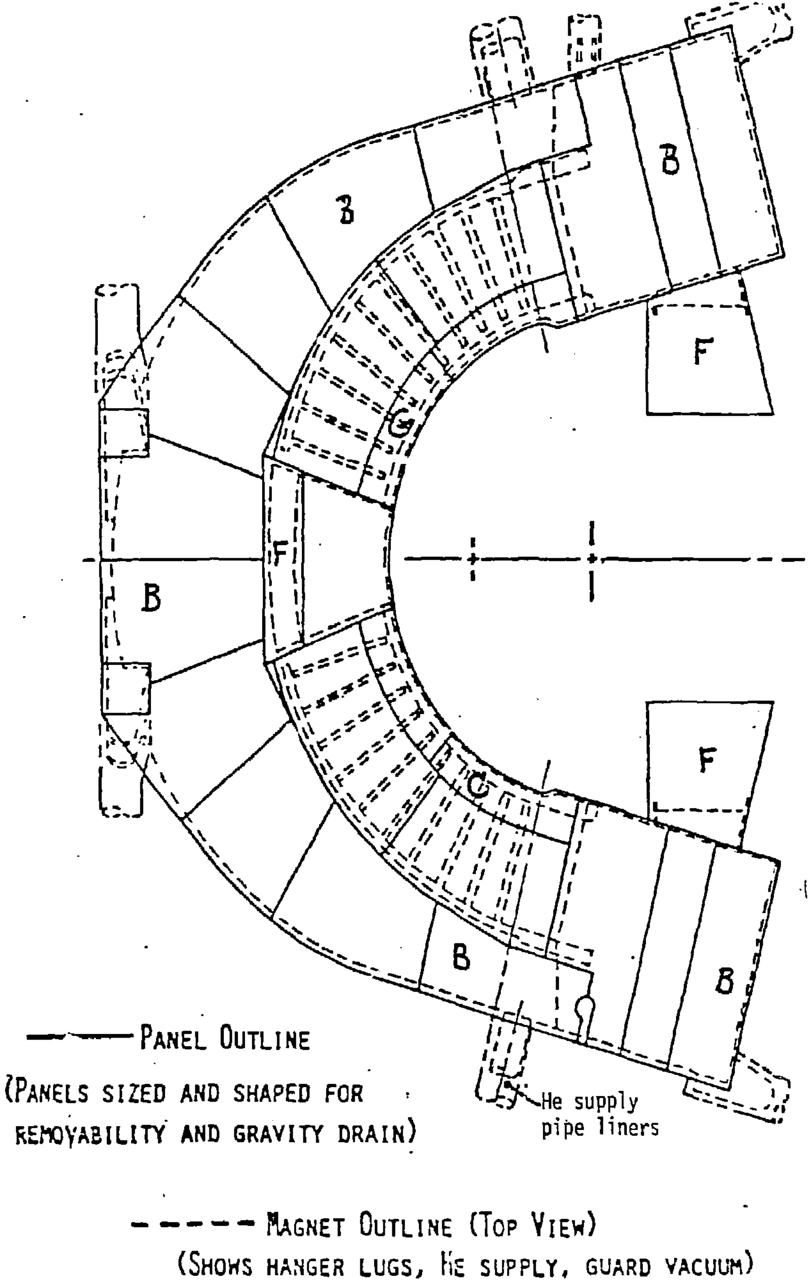

Figure 10. The panel layout over regions B, C and F covers this portion of the magnets.

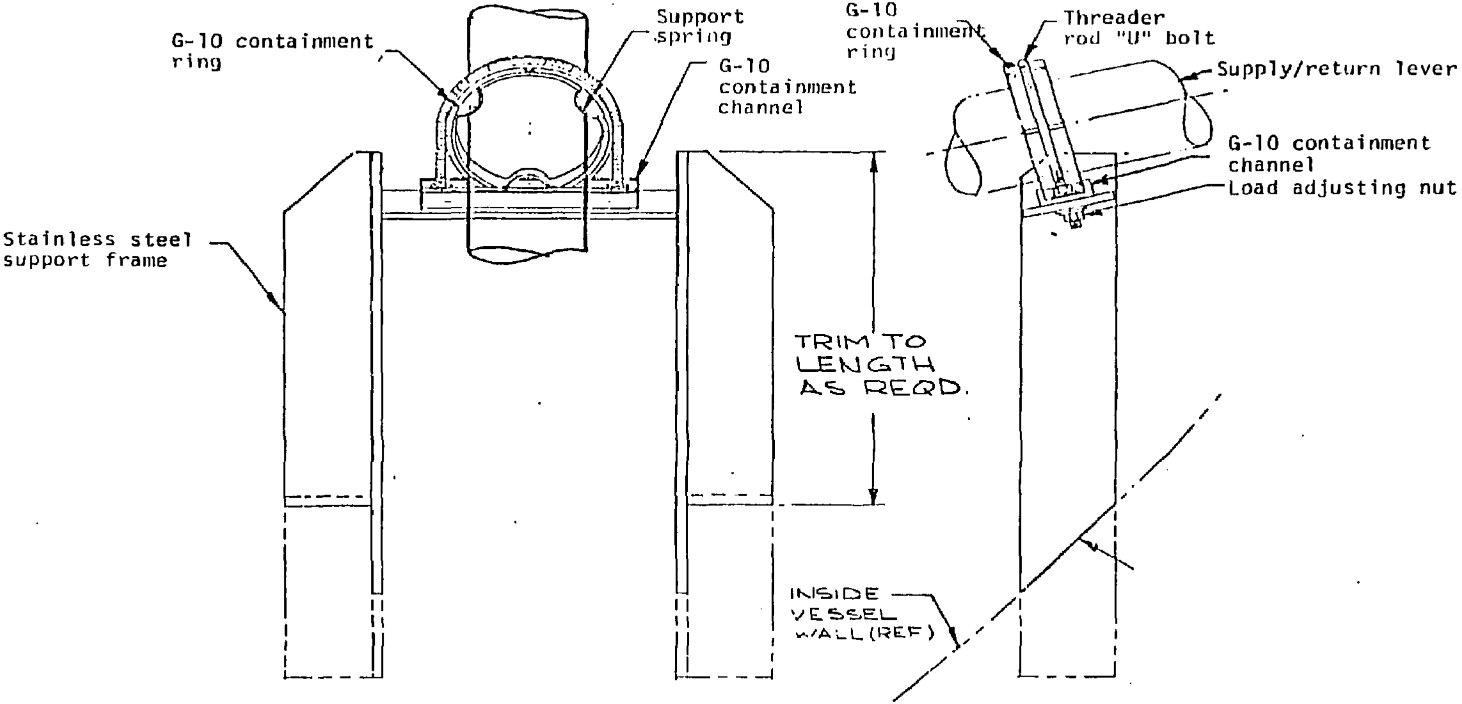

Figure 11. The supports for the 3" Ø liner supply and return lines are designed for axial and perpendicular motion, low thermal conductance, and ease of assembly.

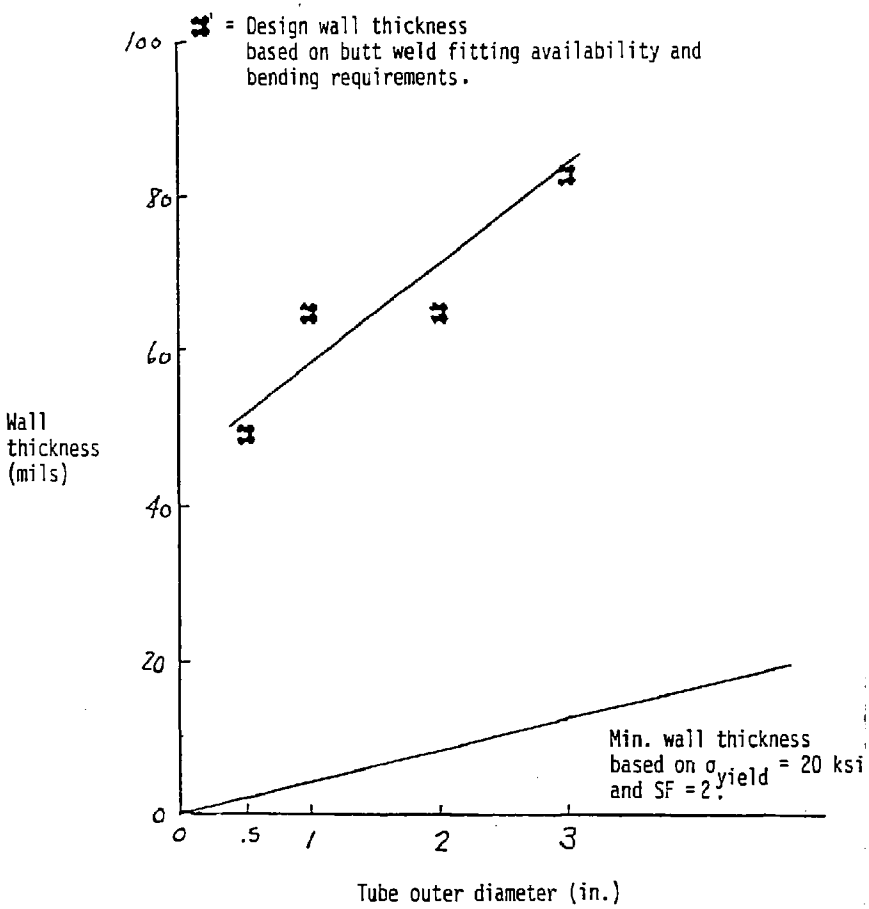

Figure 12. The wall thickness was set by the wall thickness of available tubing, butt weld fittings, and wall buckling and wall thinning during bending.

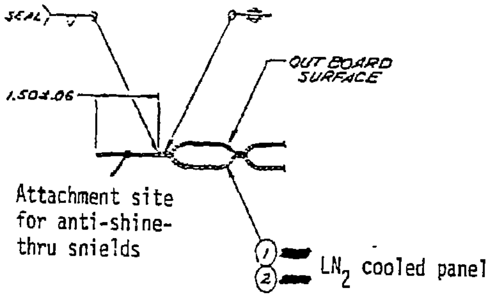

Figure 13. The panel has a cutback edge to allow for attachment of the anti-shine-thru shields.

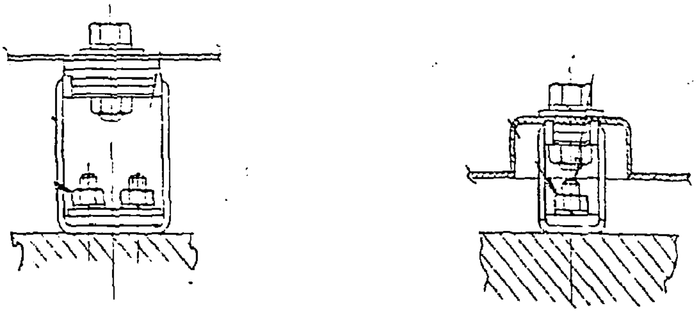

A. Regular support site

B. Capped support site

Figure 14. The attachment site allows for bolting the support to a planar surface onto an offset cap.

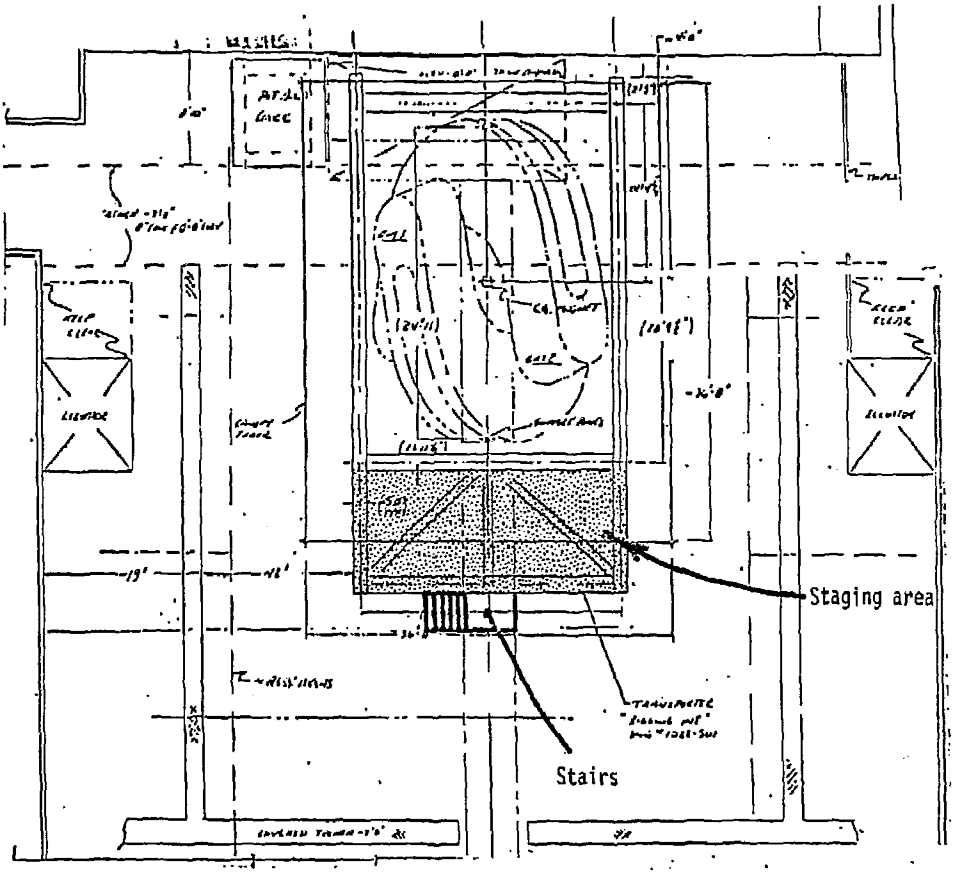

Figure 15. Access to the magnet/transporter is provided primarily from the staging area and various stairs and ladders.

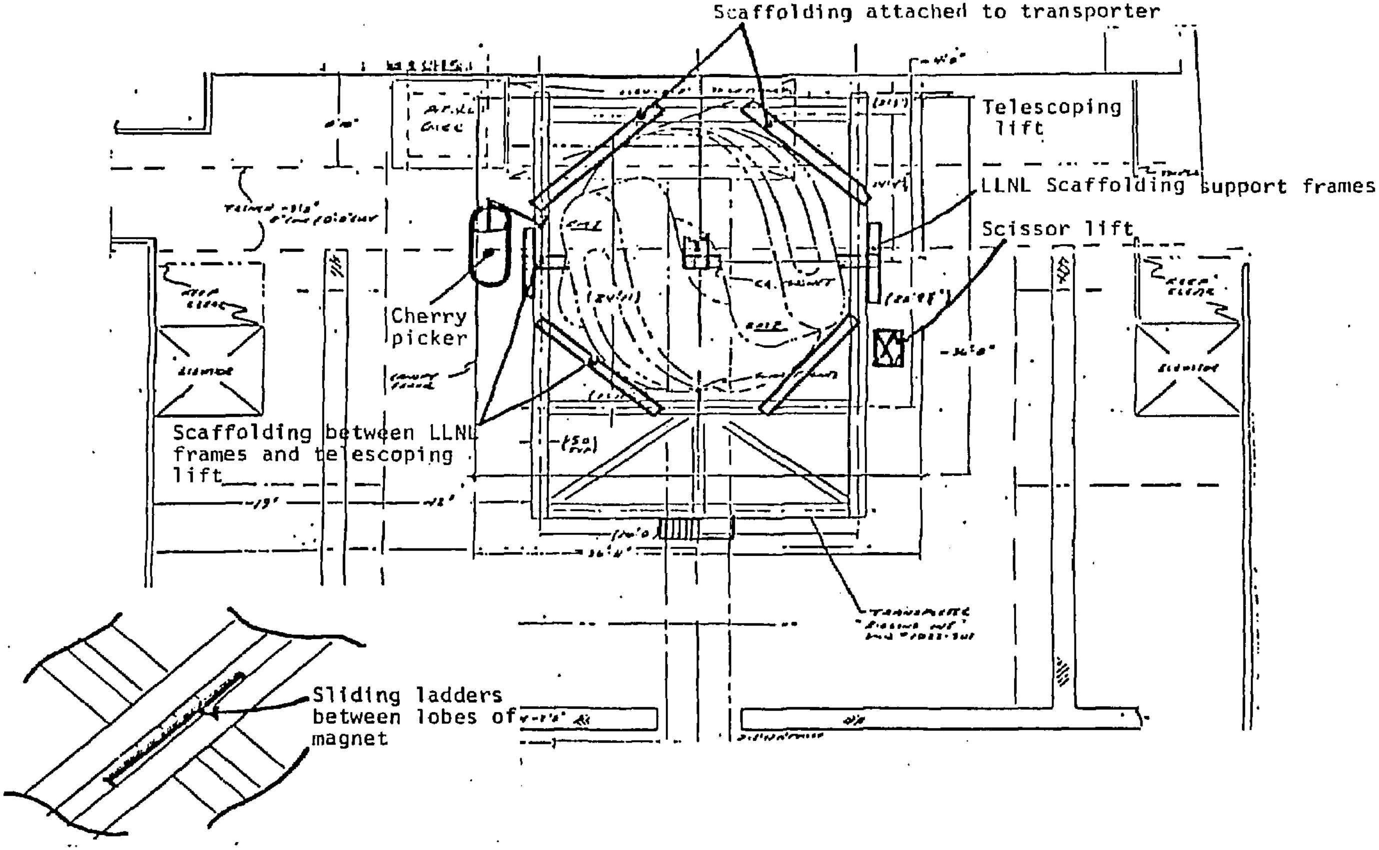

Figure 16. Scaffolding consisted mainly of planks attached to the transporter, the lifts on LLNL scaffolding frames.

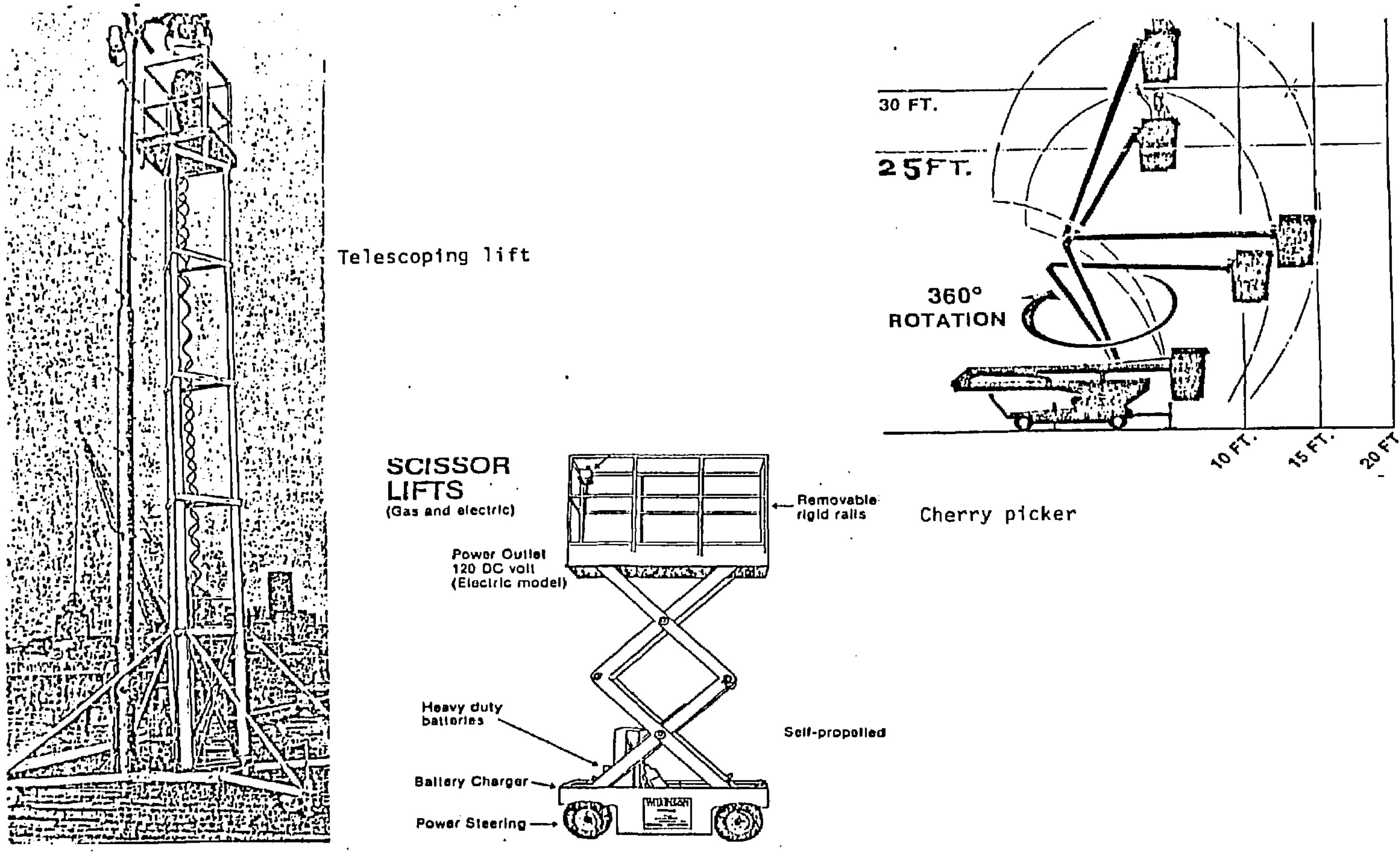

Telescoping lift

Cherry picker

Figure 17. Various lifting devices were used to position personnel and liner components near the magnet surface for liner installation.

Figure Captions

1. MFTF yin-yang magnet set.
2. MFTF-B.
3. Magnet liner system (front view).
4. Magnet liner system (in vacuum vessel).
5. Magnet liner system (regions of magnet surfaces).
6. Stayout zones for liner system.
7. Stayout zones for liner system.
8. Magnet pair on transporter.
9. Magnet pair on transporter.
10. Typical liner layout.
11. Design of supports for liner supply and return lines.
12. Minimum wall thickness vs. tube diameter for Type 316 stainless steel tubing.
13. Attachment of anti-shine-thruough shields.
14. Attachment of supports by stud welding.
15. Layout of liner installation area.
16. Methods of gaining vertical access to magnet surfaces (1).
17. Methods of gaining vertical access to magnet surfaces (2).