View metadata, citation and similar papers at core.ac.uk

brought to you by CORE

provided by Caltech Authors - Main

PROCEEDINGS OF SPIE

SPIEDigitalLibrary.org/conference-proceedings-of-spie

Generation of amplitude-squeezed light from a pump-suppressed semiconductor laser with dispersive optical feedback

John E. Kitching, Amnon Yariv, Yaakov Shevy

John E. Kitching, Amnon Yariv, Yaakov Shevy, "Generation of amplitude-squeezed light from a pump-suppressed semiconductor laser with dispersive optical feedback," Proc. SPIE 2378, Laser Frequency Stabilization and Noise Reduction, (26 April 1995); doi: 10.1117/12.208247

SPIE.

Event: Photonics West '95, 1995, San Jose, CA, United States

Downloaded From: https://www.spiedigitallibrary.org/conference-proceedings-of-spie on 7/10/2018 Terms of Use: https://www.spiedigitallibrary.org/terms-of-use

Generation of amplitude squeezed light from a pump-suppressed semiconductor laser with dispersive optical feedback

J. Kitching and A. Yariv

Department of Applied Physics, 128-95, California Institute of Technology,

Pasadena, CA 91125

Y. Shevy

Department of Physics, University of Miami, P.O. Box 248046, Coral Gables, FL 33124

ABSTRACT

Amplitude squeezed states are generated from a room temperature semiconductor laser using a combination of pump suppression and dispersive optical feedback. The laser amplitude noise is found to be sensitive to extremely weak feedback levels, of the order of 10^{-8} of the output power. A reduction of the noise from 2% below the standard quantum limit (SQL) under free-running conditions to 19% below the SQL under optimal feedback conditions is obtained. A single mode theory is presented but is found to be inadequate in explaining the measured dependence of the noise reduction on the feedback power. A multi-mode theory including asymmetrical cross-mode non-linear gain is proposed to explain this discrepancy.

1 INTRODUCTION

The generation of squeezed states of the electromagnetic field[1] has received considerable interest in recent years. Such states feature a redistribution of the fundamental quantum mechanical fluctuations which occur in the optical field due to the Heisenberg Uncertainty Principle. Quadrature squeezed states, the first squeezed states to be produced in the lab[2–4] feature reduced noise in one quadrature of the electric field operator and increased noise in the other. Amplitude squeezed states exhibit a reduction in the fluctuations in the photon number operator at the expense of the field phase, a perfectly amplitude squeezed state being the familiar number state or Fock state.

In addition to the fundamental scientific interest in the generation of non-classical states of the electromagnetic field, squeezed states have a number of potential applications to situations where precision, low-noise measurements must be made. These applications include optical communication,[5] quantum cryptography,[6] gravitational wave detection[7] and sensitive spectroscopy.[8]

Of the methods proposed for the generation of amplitude squeezed light, one of the most successful to date has been the use of a pump-suppressed semiconductor laser.[9] This method of squeezing relies on the fact that

Downloaded From: https://www.spiedigitallibrary.org/conference-proceedings-of-spie on 7/10/2018
Terms of Use: https://www.spiedigitallibrary.org/terms-of-use

in a semiconductor laser, the inversion (and therefore the gain) is proportional to the voltage across the device junction. If the laser is pumped far above threshold, the laser amplitude noise is determined almost entirely by fluctuations in the pumping rate, most of the other noise being suppressed by the strong gain clamping. If, in addition, the laser is driven with a constant-current source then the statistical pump fluctuations (which result in shot noise) can be suppressed[10] and are replaced instead by thermal noise generated by the series resistance of the current source. This thermal noise can be made arbitrarily small by making the series resistance large enough. The result is that the light at the laser output is amplitude squeezed, the degree of squeezing being limited on a fundamental level only by the efficiency of the device.

Despite the theoretical possibility of generating potentially large amounts of squeezing and the ease of implementing the method outlined above, the production of amplitude squeezed light from room temperature semiconductor lasers has had limited success. Most experiments are done at cryogenic temperatures and while the squeezing can be substantial (the largest reported value being 8.3 dB[11]), expensive and bulky cryostats are required. In addition, the photodetection is often performed inside the cryostat itself which limits the potential utility of the squeezing in applications requiring a freely propagating beam.

At room temperature, on the other hand, the largest degree of squeezing which has been generated from a free-running laser is 0.33 dB.[12] This has been due mostly to the presence of excess noise originating from either incomplete side-mode suppression or some other source. In addition, lower differential quantum efficiencies at room temperature and the inability to pump the laser far above threshold due to the danger of thermal damage to the laser facet also play a role. It is therefore important to find ways to improve the amount of squeezing that can be generated at room temperature. For example, methods such as injection locking[13] and the application of strong optical feedback from a diffraction grating[14] have been used successfully to increase the laser's side-mode suppression and therefore reduce the excess noise and enhance the squeezing.

Weak optical feedback from a dispersive element has been shown to reduce both the linewidth and the amplitude noise of semiconductor lasers.[15–19] This type of noise reduction relies on the phase-amplitude coupling,[20,21] described by the α-parameter, which takes place in a semiconductor laser as a result of the asymmetrical gain profile and detuned oscillation of the laser. Because of this phenomenon, part of the amplitude noise is coupled into the field phase generating both a linewidth in excess of the Schawlow-Townes linewidth and also a correlation between amplitude and phase noise.

The method of weak optical feedback takes advantage of the phase-amplitude coupling by creating a frequency-dependent photon lifetime[22,19] for the laser. Initial phase fluctuations are therefore coupled into the field amplitude (by the frequency-dependent photon lifetime) and hence back into the field phase (by the phase-amplitude coupling mechanism). With appropriate arrangement of the optical feedback parameters, negative feedback results and the phase noise, and therefore the linewidth, can be reduced. The semiclassical theory shows that the laser linewidth can in fact be reduced to far below the original Schawlow-Townes value. Experimentally, linewidth reductions of up to four orders of magnitude have been produced using dispersive optical feedback[23–26] resulting in semiconductor lasers with linewidths of kilohertz or below.

The fact that the amplitude and phase of the optical field are correlated can also be used to reduce the amplitude noise of the laser. Semiclassical analyses[27,19] have predicted a reduction in the amplitude noise by a factor of $(1 + \alpha^2)$, the reduction being limited by the extent to which the amplitude and phase are correlated. Such approaches can only be used when the laser is close to threshold however, since only then is the amplitude noise far enough above the SQL that a semiclassical treatment is valid. At moderate pump rates, the laser noise approaches the SQL and a fully quantum mechanical analysis must be performed in order to correctly predict the effects of optical feedback on the amplitude noise of the laser. Experimentally, reductions in the laser amplitude noise using optical feedback have been observed in lasers close to threshold[24,28] and several dB of noise reduction has been obtained, although the amplitude noise in these experiments has always remained above the SQL.

This paper extends previous investigations of amplitude noise reduction using optical feedback into the quantum regime. Section 2 outlines the quantum theory of amplitude noise reduction using optical feedback and

Downloaded From: https://www.spiedigitallibrary.org/conference-proceedings-of-spie on 7/10/2018
Terms of Use: https://www.spiedigitallibrary.org/terms-of-use

predicts the enhancement in the low-frequency squeezing that can be obtained from an already pump-suppressed semiconductor laser at moderate pump rates. The experimental setup and results are described in Section 3: squeezing of 19% below the SQL is obtained from a room temperature semiconductor laser with a combination of pump-suppression and weak optical feedback. In Section 4, a multi-mode theory incorporating asymmetrical cross-mode non-linear gain is proposed to explain the discrepancy between the experimental results and the single-mode theory. Reasonable agreement is found between the multi-mode theory and the experiment. Finally conclusions are drawn concerning the importance of excess noise processes in semiconductor lasers and the potential for their reduction using optical feedback.

2 THEORY

The effects of optical feedback on the quantum noise of a semiconductor laser are modeled using quantum Langevin equations.[9,10,29] The feedback is included by adding a term to the equation of motion for the slowly varying internal optical field $\hat{A}(t)$ proportional to the output field, $\hat{r}(t-\tau)$, delayed by the round-trip time of the external cavity τ:

$$\begin{aligned}\frac{d\hat{A}(t)}{dt} &= -\frac{1}{2}\left[\frac{1}{\tau_p} + 2i(\omega_L - \omega_0) - \frac{\omega}{\mu^2}(\hat{\chi_i} - i\hat{\chi_r})\right]\hat{A}(t) + \hat{G}(t) + \hat{g}(t) \\ &\quad + \sqrt{\frac{1}{\tau_{pe}}}\hat{f}_e(t) + \kappa e^{i\phi_0}\sqrt{\tau_{pe}}\,\hat{r}(t-\tau)\end{aligned} \tag{1}$$

where τ_p and τ_{pe} are the total photon lifetime and the photon lifetime due to output coupling alone, ω_L the lasing frequency, ω_0 the cold cavity resonant frequency, μ the non-resonant index of refraction and $\hat{\chi} = \hat{\chi_r} + i\hat{\chi_i}$ the operator for the resonant optical susceptibility of the gain medium. The terms $\hat{\Gamma}(t)$, $\hat{g}(t)$ and $\hat{f}_e(t)$ are Langevin noise sources corresponding, respectively, to dipole moment damping, internal losses and the incident vacuum field. The last term is the modification of the equation due to the feedback. Here $\kappa = \frac{1-r_c^2}{r_c\tau_c}\sqrt{P_{fb}/P_{out}}$ is a (locally frequency independent) feedback coupling rate with P_{out} the laser output power, P_{fb} the feedback power incident on the laser facet, r_c the laser facet reflectivity and τ_c the roudtrip time inside the semiconductor cavity, ϕ_0 the feedback phase and $\tau = \tau_0 + d\phi/d\omega$ the total round-trip delay through the external cavity which includes both the off-resonance delay τ_0 and the delay due to the dispersion of the intracavity element $d\phi/d\omega$.

The equation of motion for the carrier density operator $\hat{N}_c(t)$ is unmodified by the optical feedback and is given by

$$\frac{d\hat{N}_c(t)}{dt} = P - \frac{\hat{N}_c(t)}{\tau_{sp}} - \frac{\omega}{\mu^2}\hat{\chi_i}\hat{A}^\dagger\hat{A} + \hat{\Gamma}_p(t) + \hat{\Gamma}_{sp}(t) + \hat{\Gamma}(t) \tag{2}$$

where P is the pump rate, τ_{sp} is the carrier spontaneous emission lifetime which is assumed to include non-radiative decay of carriers, and $\hat{\Gamma_p}(t)$, $\hat{\Gamma_{sp}}(t)$ and $\hat{\Gamma}(t)$ are Langevin noise terms corresponding to pump fluctuations, spontaneous emission into non-lasing modes and dipole moment damping. Finally, the equation for the external field, also unmodified by the feedback, is

$$\hat{r}(t) = -\hat{f}_e(t) + \sqrt{\frac{1}{\tau_{pe}}}\hat{A}(t). \tag{3}$$

The correlation functions for the above noise terms have been calculated previously.[9,29]

The operators for the carrier density, internal and external fields are now written as a combination of average values and fluctuation operators:

$$\hat{A}(t) = \left[A_0 + \Delta\hat{A}(t)\right]e^{i\Delta\hat{\phi}(t)} \tag{4}$$

Downloaded From: https://www.spiedigitallibrary.org/conference-proceedings-of-spie on 7/10/2018
Terms of Use: https://www.spiedigitallibrary.org/terms-of-use

$$\hat{r}(t) = [r_0 + \Delta\hat{r}(t)]\, e^{i\Delta\hat{\psi}(t)} \tag{5}$$
$$\hat{N}_c(t) = N_{c0} + \Delta\hat{N}_c(t) \tag{6}$$
$$\hat{\chi}(N_c) = \hat{\chi}_r + i\hat{\chi}_i = \langle\hat{\chi}_r\rangle + i\,\langle\hat{\chi}_i\rangle + \xi_i(\alpha + i)\Delta\hat{N}_c. \tag{7}$$

where α is the linewidth enhancement factor and $\xi_i = \partial\chi_i/\partial N_c$. It is also assumed that

$$\Delta\hat{\phi}(t+\tau) - \Delta\hat{\phi}(t) \ll 1 \tag{8}$$
$$\sqrt{P_{fb}/P_{out}} \ll 1 \tag{9}$$

requiring that the phase change of the field during a round-trip time of the external cavity is small, i.e. $\Delta\nu \ll 1/\tau$ where $\Delta\nu$ is the laser linewidth and that the feedback power is much smaller than the output power (weak feedback). Under these assumptions, small signal equations for the fluctuations in carrier density, field amplitude and field phase are derived and, when Fourier-transformed, result in algebraic equations for the transformed operators

$$(i\Omega - A_1)\Delta\tilde{N}_c(\Omega) = A_2\Delta\tilde{A}(\Omega) + \tilde{\Gamma}(\Omega) + \tilde{\Gamma}_{sp}(\Omega) + \tilde{\Gamma}_p(\Omega) \tag{10}$$
$$i\Omega(1+C_i)\Delta\tilde{A}(\Omega) + i\Omega C_r A_0\Delta\tilde{\phi}(\Omega) = A_3\Delta\tilde{N}_c(\Omega) + \tilde{G}_r(\Omega) + \tilde{g}_r(\Omega) + \sqrt{\frac{1}{\tau_{pe}}}\tilde{f}_{er}(\Omega) \tag{11}$$
$$-i\Omega C_r\Delta\tilde{A}(\Omega) + i\Omega(1+C_i)A_0\Delta\tilde{\phi}(\Omega) = -\alpha A_3\Delta\tilde{N}_c(\Omega) + \tilde{G}_i(\Omega) + \tilde{g}_i(\Omega) + \sqrt{\frac{1}{\tau_{pe}}}\tilde{f}_{ei}(\Omega) \tag{12}$$

where

$$A_1 = -\left(\frac{1}{\tau_{sp}} + \frac{1}{\tau_{st}}\right) = -\frac{1+n_{sp}R}{\tau_{sp}} \tag{13}$$
$$A_2 = -\frac{2A_0}{\tau_p} \tag{14}$$
$$A_3 = \frac{\omega}{2\mu^2}\xi_i A_0 = \frac{n_{sp}R}{2A_0\tau_{sp}} \tag{15}$$
$$C_i(\Omega) = \kappa_0\tau\cos\phi_0\left(\frac{1-e^{-i\Omega\tau}}{i\Omega\tau}\right) \tag{16}$$
$$C_r(\Omega) = -\kappa_0\tau\sin\phi_0\left(\frac{1-e^{-i\Omega\tau}}{i\Omega\tau}\right) \tag{17}$$

where $R = i_L/i_{th} - 1$ is the pump rate, i_L is the injection current, i_{th} is the threshold current and $n_{sp} = E_{cv}/(E_{cv} - E_{vc})$ is the inversion parameter. Here E_{cv} and E_{vc} and the stimulated emission rate per photon and stimulated absorbtion rate per photon respectively.

Equations (10)-(12) along with (3) can be solved for the power spectral density of the external field amplitude noise $P_{\Delta\hat{r}}(\Omega)$ resulting in

$$P_{\Delta\hat{r}}(\Omega) = 2|R_1|^2\left[\frac{4kT}{q^2R_s} + \frac{N_{c0}}{\tau_{sp}}\right] + \frac{1}{2}\left|1 - \frac{R_2(1+C_i)}{\sqrt{\tau_{pe}}}\right|^2 + \frac{2n_{sp}-1}{2\tau_p}|R_2(1+C_i) - 2R_1A_0|^2 + \frac{1}{2\tau_{p0}}|R_2|^2|1+C_i|^2 + \frac{n_{sp}}{\tau_p}|R_2|^2|C_r|^2 \tag{18}$$

where

$$R_1(\Omega) = \sqrt{\frac{1}{\tau_{pe}}}\frac{A_3}{D(\Omega)}\left[1 + C_i + \alpha C_r\right] \tag{19}$$

Downloaded From: https://www.spiedigitallibrary.org/conference-proceedings-of-spie on 7/10/2018
Terms of Use: https://www.spiedigitallibrary.org/terms-of-use

$$R_2(\Omega) = \sqrt{\frac{1}{\tau_{pe}}} \frac{(i\Omega - A_1)}{D(\Omega)} \tag{20}$$

$$D(\Omega) = i\Omega(i\Omega - A_1)\left[(1 + C_i)^2 + C_r^2\right] - A_2 A_3(1 + C_i + \alpha C_r) \tag{21}$$

and where R_s is the series resistance of the current source. Equation (18) is the main result and describes the effects of optical feedback on the amplitude noise spectrum of a semiconductor laser.

Some simplification can be obtained if it is assumed that the measurement frequency of the noise is much smaller than the inverse of the carrier stimulated emission lifetime. In this case the amplitude noise power spectral density for a completely pump-suppressed laser becomes

$$P_{\Delta r}^{(0)}(\Omega) = (1 - \eta) \quad + \quad \eta \left[\frac{1}{R} + 2n_{sp} \left| \frac{\alpha C(\Omega) - 1/(n_{sp}R)}{1 + \alpha C(\Omega)} \right|^2 \right.$$
$$\left. + \, 2n_{sp} \left(1 + \frac{1}{n_{sp}R}\right)^2 \frac{|C(\Omega)|^2}{|1 + \alpha C(\Omega)|^2} \right] \tag{22}$$

where η is the internal optical efficiency and $C(\Omega) = C_r(\Omega)/(1+C_i(\Omega))$. The effects of the optical feedback can be clearly seen in (22). The optical feedback affects neither the noise added due to non-perfect efficiency (described by η) nor the noise due to spontaneous emission into non-lasing modes (which causes the first term inside the brackets in (22)). If pump noise had been included, it would also have been unaffected by the optical feedback. The reason for this is that all of these noise sources produce amplitude noise without a corresponding component in the carrier density and therefore no phase-amplitude correlation. Noise due to spontaneous emission into the lasing mode, described by the second term in the brackets, is altered by the feedback, however, and can in fact be reduced to zero if $C(\Omega) = 1/(\alpha n_{sp}R)$. The last term in the brackets is the part of the phase noise originally uncorrelated with the amplitude noise which is coupled back into the field amplitude. Because of this added noise, the net reduction in the portion of the noise due to spontaneous emission into the lasing mode can be reduced only by a factor of $(1 + \alpha^2)$ rather that completely to zero. This incomplete reduction can be understood in that the amplitude and phase were not perfectly correlated to begin with and therefore that perfect reduction cannot be accomplished.

3 EXPERIMENTAL RESULTS

The experimental setup is shown in Figure 1. An unmodified commercial, Fabry-Perot quantum well semiconductor laser (SDL-5412) lasing single mode at 852nm was used in the experiment. It was mounted inside a sealed TO-3 package and was high reflectivity coated on the rear facet (> 98%) and anti-reflection coated on the front facet (< 5%). The threshold current was 17 mA at room temperature and the differential quantum efficiency, 69%. The laser was driven with a home-built constant current source[30] and was carefully temperature stabilized to prevent both frequency drifts and temperature-induced changes in the mode structure. The entire laser mount was placed inside two foam-lined containers which provided thermal and acoustical isolatation from the rest of the room. Pump suppression was achieved at high frequencies while allowing DC current to pass uninhibited by placing a 100 mH inductor in series with the laser.

The laser was coupled to an external cavity formed by the laser front facet and an end mirror 75 cm away. Most (99%) of the light emitted from the laser was reflected out of the external cavity by a beamsplitter (BS1) while the remaining 1% was transmitted in order to provide weak feedback. Inside the external cavity, a cell containing Cesium (Cs) vapor was placed between two crossed polarizers, the first ($P_{\|}$) oriented for maximum transmission of the laser output light. An axial magnetic field of 150 Gauss was applied to the Cs cell which allowed transmission of the cavity field through the polarizers via Faraday rotation only when the laser was tuned to the Cs D_2 transition at 852 nm. By keeping the magnetic field strength high, the narrow, velocity-selective

Downloaded From: https://www.spiedigitallibrary.org/conference-proceedings-of-spie on 7/10/2018
Terms of Use: https://www.spiedigitallibrary.org/terms-of-use

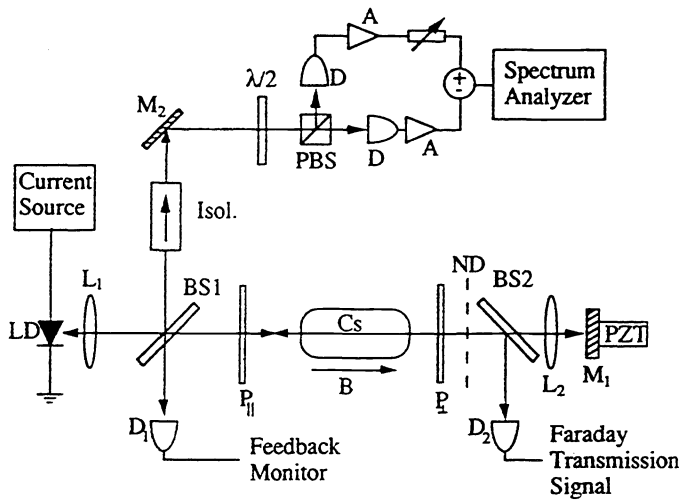

Figure 1: Experimental setup: LD, laser diode; BS, beamsplitter; P, polarizer; D, detector; ND, neutral density filter; L, lens; M, mirror; $\lambda/2$, half-wave plate; PBS, polarizing beamsplitter; A, amplifier.

features on the Cs transmission spectrum were not resolved as in previous experiments[26,31] and the round-trip delay time through the external cavity was kept to near the empty-cavity value while retaining the mode-selectivity of the feedback (only one semiconductor laser mode was resonant with the Cs transition). The transmitted field was then reflected off an end mirror and retraced its path back to the laser providing weak optical feedback. A neutral density filter placed in the beam path and a piezoelectric transducer (PZT) attached to the end mirror allowed a careful control of the feedback intensity and phase. Part of the returning field was reflected into a detector (D_1) for measurement of the feedback strength: typical feedback powers were about 10^{-7} of the output power. In this way, dispersive, wavelength-selective optical feedback could be applied to the laser diode.

The output from the external cavity was passed through an isolator which provided 60 dB of isolation before being sent to a balanced homodyne receiver for measurement of the amplitude noise with respect to the SQL. The balanced homodyne receiver consisted of a half-wave plate, polarizing beamsplitter and high quantum efficiency (97%) photodetectors (Hamamatsu S3994, 30 MHz bandwidth). The current-to-current differential efficiency from laser to detector was 43%. The laser light was centered on the detectors and expanded to fill the available detector area (1 cm^2), a procedure which was found to be important in keeping the detectors from saturating under the high incident powers. The electronic signals from the photodetectors were amplified sent through a variable delay and variable attenuators and finally to a differential amplifier (Techtronix 7A24) which could either add or subtract the two photocurrents. The output from the differential amplifier was then sent to an electronic spectrum analyzer for measurement of the noise.

The receiver was balanced in the following way. First, the half-wave plate was adjusted so that the DC photocurrents from the two photodetectors (D) were equal. A small sinusoidal modulation was then applied to the laser injection current at the frequency at which the noise was measured. The output signal from the differential amplifier in the subtraction mode at the modulation frequency was minimized by adjusting the electronic attenuation and delay in one arm of the receiver. Common mode rejection of greater than 40 dB was achieved in this way. The modulation was then turned off and the noise at the same frequency measured in both addition and subtraction modes of the differential amplifier. The addition mode gave the amplitude noise on the laser light while the subtraction mode gave the SQL. Thus the laser noise could be measured with respect to the SQL

Downloaded From: https://www.spiedigitallibrary.org/conference-proceedings-of-spie on 7/10/2018
Terms of Use: https://www.spiedigitallibrary.org/terms-of-use

without any physical changes in the experimental setup. The background amplifier noise was subtracted from all measured signals.

The laser noise under free-running conditions was found to be extremely sensitive to spurious optical feedback. Feedback powers as small as 10^{-8} of the output power were found to affect the measured noise level by up to several dB. To reduce the effects of this feedback, most of the optics in the beam path were slightly misaligned so that the reflected beam would not return to the laser. However, even scattered light from the input polarizer of the isolator caused significant variation in the noise level. This was measured by placing the isolator on a translation stage and then varying its position with a PZT causing the phase of the feedback field to change thereby producing oscillations in the measured amplitude noise level. The position of the beam on the isolator could then be adjusted to minimize the effect of the spurious feedback on the laser noise. Even under the best conditions, the variation in the noise level with isolator position could not be reduced below about 0.5 dB for the free-running laser. When intentional feedback from the external cavity was applied, the noise was found to be much less sensitive to the isolator position. In addition, several other sources of spurious feedback such as reflections from the collimating lens and scattered light off the monitor photodiode (contained inside the TO-3 package opposite the rear facet of the laser) could not be controlled and the effects of these sources on the laser noise remain unclear. The fact that the reflecting surfaces of these two sources were so close to the laser should have made their effects on the noise minimal, however.

We found that a useful technique for estimating the amount of spurious feedback being applied to the laser was to measure the dependence of the lasing frequency on the injection current. Under free-running conditions, the lasing frequency decreases smoothly as the injection current is increased. When feedback is present, however, the lasing frequency is "pulled" slightly from its free-running value by an amount which depends on the amplitude and phase of the feedback.[32] Thus, as the injection current is scanned, the lasing frequency changes in a step-like manner, staying nearly constant over a small range of injection currents and then jumping suddenly to a different frequency. In our case the lasing frequency was measured by blocking the feedback from the external cavity at the mirror and then measuring the transmission through the Cs cell as the lasing frequency was scanned over the Cs line by changing the injection current. When spurious feedback was present, a step-like structure appeared on the transmission signal allowing an estimation of the feedback power. Under optimal alignment conditions, the feedback power was estimated to be below $10^{-8}P_{out}$.

The laser noise was measured relative to the SQL as a function of the feedback power and is plotted in Figure 2. For each data point, the noise of the free-running laser was first minimized with respect to the spurious feedback by adjusting the position of the optical isolator. The feedback from the optical cavity was then applied and the noise reminimized by adjusting the position of the end mirror. The data were taken at three different injection currents, corresponding to 5.8 i_{th} (solid triangles), 6.4 i_{th} (solid circles) and 6.8 i_{th} (open squares). At the lower injection current the laser noise is clearly reduced from above the SQL to well below due to the optical feedback. At higher injection currents, although the ultimate noise level at high feedback is lower, the feedback-induced reduction in the noise is somewhat less. A maximum squeezing of 19% below the SQL is measured under optimal feedback conditions which is an improvement by over a factor of three from the best previous room temperature result from a free-running laser (6% squeezing[12]). Also shown in the plot is the prediction of the single-mode theory, (22), (dashed lines) using the parameter values $n_{sp} = 1.5$, $\alpha = -2.5$ and with ϕ_0 adjusted to produce the minimum noise. Clearly the agreement is not particularly good, an issue discussed further below.

The experiment was also repeated with the laser tuned off the Cs line and the polarizers opened to allow partial transmission of the light through the external cavity. In this case the wavelength selectivity of the feedback was lost and the feedback applied to all semiconductor cavity modes simultaneously. Such an arrangement produced controlled conditions similar to those which occur when unintentional feedback from optical components or detectors is present. Qualitatively similar results to the wavelength-selective case were obtained and are shown in Figure 3. The difference in the noise power measured under free-running conditions between Figure 2 and Figure 3 we believe to be due to changes in the side-mode structure induced by the small temperature change required to bring the laser frequency off the Cs line. The single-mode theory is again shown (dashed lines).

Downloaded From: https://www.spiedigitallibrary.org/conference-proceedings-of-spie on 7/10/2018
Terms of Use: https://www.spiedigitallibrary.org/terms-of-use

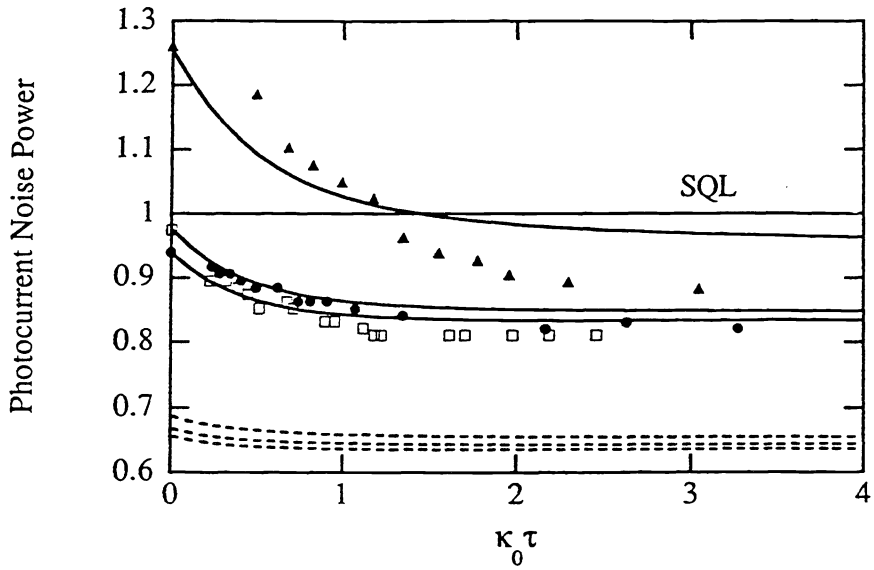

Figure 2: Photocurrent noise power, normalized to the SQL, as a function of the feedback coupling rate for the case of wavelength-selective feedback. The data were taken at three different injection currents corresponding to 5.8 i_{th} (solid triangles), 6.4 i_{th} (solid circles) and 6.8 i_{th} (open squares). The prediction of the single-mode theory is given by the dashed lines while the multi-mode theory incorporating asymmetrical cross-mode non-linear gain is given by the solid lines.

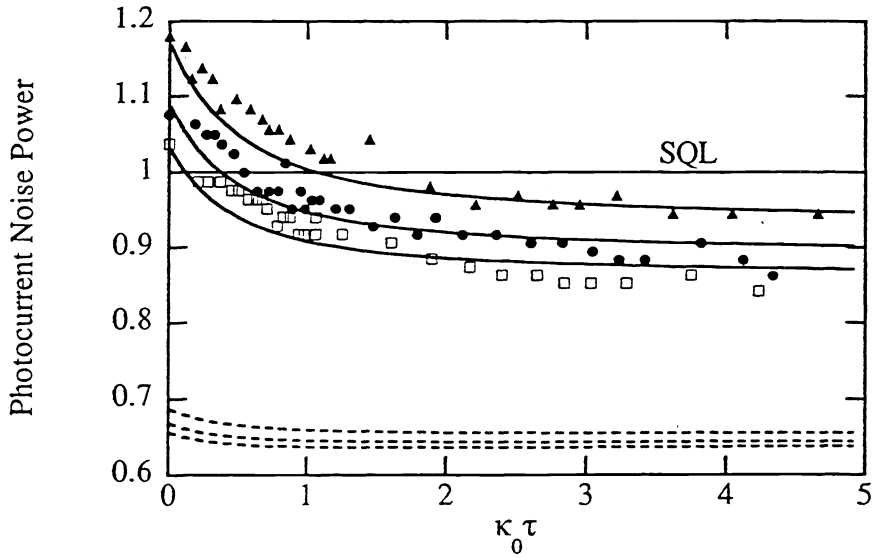

Figure 3: Photocurrent noise power, normalized to the SQL, as a function of the feedback level for non-wavelength-selective feedback (empty cavity).

Downloaded From: https://www.spiedigitallibrary.org/conference-proceedings-of-spie on 7/10/2018
Terms of Use: https://www.spiedigitallibrary.org/terms-of-use

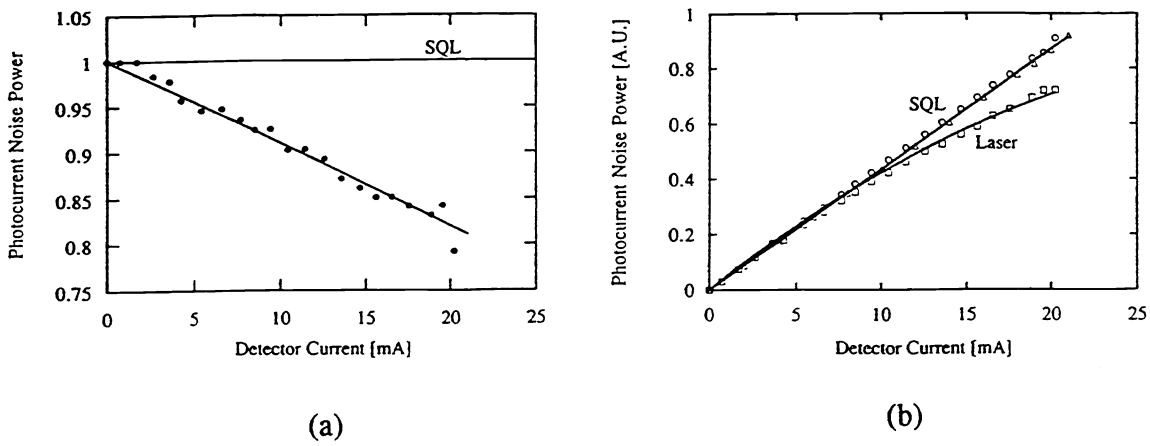

Figure 4: Dependence of the squeezing on the optical attenuation. (a) The photocurrent noise power, normalized to the SQL, as a function of the attenuation. The squeezing is reduced in a linear fashion towards the SQL. (b) The raw noise power for the laser (squares) and the SQL measured using the laser (circles) and LED (triangles). The SQL is seen to be linear with the DC photocurrent while the laser noise drops below the SQL indicating squeezing.

A number of experimental checks were performed in order to verify the measured level of squeezing. Firstly, high power LED's with peak wavelength of 890 nm were shone into the two detectors and the resulting photocurrent noise power measured at the same DC photocurrent as produced by the laser. The noise level was found to agree with the shot noise level measured with the laser (by subtracting the photocurrents) to within 2%. Secondly, an optical attenuator was place in the beam path and the squeezing measured as function of the optical attenuation as shown in Figure 4. Figure 4(a) shows the photocurrent noise power, normalized to the SQL, as a function of the optical attenuation. The squeezing is reduced linearly towards the SQL as the attenuation is increased in exactly the manner predicted by theory (solid line). As a further check on the detector response linearity, the photocurrent noise power itself was plotted (Figure 4(b)) as a function of the DC detector current (optical attenuation) for the laser (squares), SQL as measured with the laser light (circles) and SQL as measured with the LED (triangles). The SQL is found to be linear with the detector current, as expected, while the laser noise drops under the SQL in a non-linear fashion as the attenuation is reduced. From our measurement error of 0.1 dB on the noise and these checks, we believe our measurements of the squeezing to be accurate to within 3%.

The longitudinal mode spectrum of the laser was also monitored simultaneously with the amplitude noise level under feedback conditions. The concern here was that our measured noise reduction could have been due to a suppression of the side modes rather than a phase-amplitude coupling effect. The existence of side modes leading to excess noise in semiconductor lasers has been mentioned by several authors.[11,13,14,33] The effect of side modes on the laser noise depends crucially on the broadening mechanism. If the laser is assumed to be completely homogeneously broadened, for example, then the presence of side-modes does not alter the photocurrent noise significantly when the total field power is detected.[34] Although the amplitude noise on each individual mode can be quite high, anti-correlations between the modes produce a cancellation of the noise when all the modes are detected together. This anti-correlation is generated because all modes couple to the same carrier population; fluctuations in the intensity of one mode get coupled through the carrier density into the noise in the intensity of the other modes. If, on the other hand, the laser is assumed to be inhomogeneously broadened, then all of the modes couple to independent carrier populations. As a result, no correlations exist between the noise on the individual modes and the photocurrent noise powers generated by each mode add incoherently. If the mode structure is that of a strong main mode and weak side-modes then although the side-modes have significantly

Downloaded From: https://www.spiedigitallibrary.org/conference-proceedings-of-spie on 7/10/2018
Terms of Use: https://www.spiedigitallibrary.org/terms-of-use

less power, they are much closer to threshold and therefore have a much larger noise relative to their SQL. As a result they can contribute a significant amount of noise to the total photocurrent noise power.

Since the optical feedback slightly alters the threshold gain condition for each mode depending on the feedback phase, the mode structure could have been affected leading to a change in the noise. However, it was found that the side-mode suppression was greater than 28 dB for every side-mode and that the average power in the sidemodes was reduced by only $6 \pm 4\%$ from the free-running value when the optical feedback was applied. It therefore seems unlikely that such a small change in the side-mode power could be responsible for the more than 17% change in the measured noise level.

4 ASYMMETRICAL CROSS-MODE NON-LINEAR GAIN

We believe that the excess noise under free-running conditions and the larger than expected feedback-induced noise reduction are due to a combination of multi-mode operation and asymmetrical cross-mode non-linear gain in conjunction with the phase-to-amplitude coupling mechanism described above. The effect of asymmetrical cross-mode non-linear gain on the classical amplitude noise spectrum has been calculated by Su et. al..[33] They have found that the intermode coupling renormalizes the relaxation resonance of the weak side-modes leading to a strong increase in the noise at low frequencies.

We have extended the model of Su et. al. to include the fully quantum mechanical noise sources and have also added the effects of optical feedback. We assume only two modes, one strong main mode and one weak side mode. The equations of motion for the carrier density $\hat{N}_c(t)$, the main mode field, $\hat{A}_1(t)$ and side-mode field, $\hat{A}_2(t)$ are written as

$$\frac{d\hat{N}_c(t)}{dt} = P - \frac{\hat{N}_c(t)}{\tau_{sp}} - \frac{\omega}{\mu^2}\hat{\chi}_{i1}\hat{A}_1^{\dagger}\hat{A}_1 - \frac{\omega}{\mu^2}\hat{\chi}_{i2}\hat{A}_2^{\dagger}\hat{A}_2 + \hat{\Gamma}_p(t) + \hat{\Gamma}_{sp}(t) + \hat{\Gamma}(t) \tag{23}$$

$$\frac{d\hat{A}_1(t)}{dt} = -\frac{1}{2}\left[\frac{1}{\tau_p} + 2i(\omega_{L1} - \omega_{01}) - \frac{\omega}{\mu^2}(\hat{\chi_{i1}} - i\hat{\chi_{r1}}) + v_g\epsilon_0|A_1|^2 + v_g\epsilon_{12}|A_2|^2\right]\hat{A}_1(t)$$
$$+\hat{G}_1(t) + \hat{g}_1(t) + \sqrt{\frac{1}{\tau_{pe}}}\hat{f_{e1}}(t) + \kappa e^{i\phi_0}\sqrt{\tau_{pe}}\,\hat{r_1}(t-\tau) \tag{24}$$

$$\frac{d\hat{A}_2(t)}{dt} = -\frac{1}{2}\left[\frac{1}{\tau_p} + 2i(\omega_{L2} - \omega_{02}) - \frac{\omega}{\mu^2}(\hat{\chi_{i2}} - i\hat{\chi_{r2}}) + v_g\epsilon_0|A_2|^2 + v_g\epsilon_{21}|A_1|^2\right]\hat{A}_2(t)$$
$$+\hat{G}_2(t) + \hat{g}_2(t) + \sqrt{\frac{1}{\tau_{pe}}}\hat{f_{e2}}(t) \tag{25}$$

where v_g is the group velocity of the medium and where

$$\epsilon_{ij} = \epsilon_0\frac{1 + \alpha'\tau'(\omega_i - \omega_j)}{1 + [\tau'(\omega_i - \omega_j)]^2} \tag{26}$$

is the non-linear gain coefficient. Here τ' is the relaxation time and α' is the phase-amplitude coupling constant associated with the physical process responsible for the non-linear gain.

These equations are linearized as in Section 2 and the resulting small-signal equations Fourier transformed and solved for the external field amplitudes. The fluctuation in the total emitted photon flux, $\Delta S_T(t)$, is then calculated using the relations

$$\Delta S_T(t) = 2r_{10}\Delta r_1(t) + 2r_{20}\Delta r_2(t) \tag{27}$$

$$\Delta r_1(t) = \frac{1}{\sqrt{\tau_{pe}}}\Delta A_1(t) - \hat{f}_{e1r}(t) \tag{28}$$

Downloaded From: https://www.spiedigitallibrary.org/conference-proceedings-of-spie on 7/10/2018
Terms of Use: https://www.spiedigitallibrary.org/terms-of-use

$$\Delta r_2(t) = \frac{1}{\sqrt{\tau_{pe}}}\Delta A_2(t) - \hat{f}_{e2r}(t). \tag{29}$$

Under the assumption that the power in the side mode is much less that the main mode power, the power spectral density for the total intensity fluctuation, normalized to the SQL, is calculated to be

$$P_{\Delta S_T}(\Omega) = P^{(0)}_{\Delta S_T}(\Omega) + P^{(ex)}_{\Delta S_T}(\Omega)\left|\frac{1+C_i}{1+C_i+\alpha C_r}\right|^2 \tag{30}$$

where $P^{(0)}_{\Delta S_T}(\Omega)$ is the amplitude noise power with feedback for a single mode laser, given by (18),

$$P^{(ex)}_{\Delta S_T}(\Omega) = 2\frac{\beta n_{sp}}{\tau_p \tau_{pe}}\left(\frac{A_{20}}{A_{10}}\right)^2 \frac{\Omega^2 + \left(\frac{1+n_{sp}R}{\tau_{sp}}\right)^2}{(\omega_2^2-\Omega^2)^2+\gamma_2^2\Omega^2}, \tag{31}$$

and

$$\beta = \left[v_g(\epsilon_0 - \epsilon_{21})A_{10}^2\tau_p\left(1+\frac{1}{n_{sp}R}\right)\right]^2 \tag{32}$$

$$\omega_2^2 = \left(\frac{R_{sp}}{A_{20}} + v_g\epsilon_0 A_{20}^2\right)\left(\frac{1}{\tau_{sp}}+\frac{1}{\tau_{st}}\right) \tag{33}$$

$$\gamma_2 = \left(\frac{1}{\tau_{sp}}+\frac{1}{\tau_{st}}\right) + v_g\epsilon_0 A_{20}^2 + \frac{R_{sp}}{A_{20}^2} \tag{34}$$

and R_{sp} is the spontaneous emission rate into a single mode of the field.

It can be seen from (28) that since $P^{(ex)}_{\Delta r}$ is independent of feedback, the presence of the side modes adds noise for which the feedback dependence is very simple. The physical process which generates this reduction of the multi-mode noise is the following. The existence of the side-mode generates excess amplitude noise under free-running conditions because of the non-linear inter-mode coupling and renormalization of the weak mode relaxation resonance frequency. However, this process also generates fluctuations in the carrier density which are strongly correlated with the excess intensity noise. The carrier density noise generates excess phase noise in the main-mode field through the phase-amplitude coupling process which is then coupled back into the main-mode amplitude by the optical feedback. The main-mode amplitude is thus corrected to compensate for the *total* intensity fluctuation of all modes resulting in a reduction of the excess noise.

Equation (28) is shown in the low-frequency limit by the solid lines in Figure 2 and Figure 3. The value of $P^{(ex)}_{\Delta S_T}$ is taken as a fitting parameter and the feedback phase (ϕ_0 in Equations (16) and (17)) is again adjusted to minimize the noise at each value of C. The other parameters are the same as those used in the single-mode fits. Clearly substantially better agreement with experiment is obtained with the multi-mode theory indicating that incomplete side-mode suppression and cross-mode non-linear gain can at least explain the observed behavior of the noise on feedback intensity. We note that while the agreement of experimental results with this theory is fairly good, we do not rule out the possibility of other processes also contributing to the excess noise and the relative importance of the various noise sources remains unclear.

5 CONCLUSION

In summary, we have investigated both theoretically and experimentally, the effects of optical feedback on the amplitude noise and squeezing of semiconductor lasers. Theoretical predictions based on a single-mode model show that the low-frequency amplitude squeezing in a pump-suppressed semiconductor laser can be enhanced by up to 3 dB at moderate pump rates using optical feedback, a regime potentially important for the generation of

Downloaded From: https://www.spiedigitallibrary.org/conference-proceedings-of-spie on 7/10/2018
Terms of Use: https://www.spiedigitallibrary.org/terms-of-use

squeezed light at room temperature. An expression for the explicit dependence of the low-frequency amplitude noise power spectral density on feedback amplitude and phase is also derived.

Experimentally, it was found that extremely weak feedback, on the order of $10^{-\delta}P_{out}$, can change the amplitude noise power by several dB at frequencies up to 100 MHz. Depending on the phase of the optical feedback, the noise is found to either increase or decrease indicating that careful control of the feedback phase is required in order to generate an enhancement in the squeezing. The squeezing in a pump-suppressed room-temperature laser is enhanced from 2% below the SQL under free-running conditions to 19 % below the SQL under optimal feedback conditions. Agreement with the single-mode theory is not particularly good indicating that additional mechanisms may play a role in determining the laser noise. The mode structure of the laser was measured simultaneously with the amplitude noise and the feedback-induced changes in the mode structure are thought to be inadequate in accounting for the measured noise reduction.

Instead, we propose that the excess noise found under free-running conditions and the larger than expected feedback induced reduction are caused by the existence of weak side-modes in combination with asymmetrical cross-mode non-linear gain. This process causes additional amplitude noise under free-running conditions in the low-frequency part of the spectrum as a result of the inter-mode coupling. It also generates additional correlation between the total intensity of all modes and the main mode phase. This correlation allows a reduction of the excess noise by the optical feedback in addition to the reduction obtained from the single-mode noise. A quantitative two-mode model is outlined to evaluate the effects of optical feedback on this excess noise source. With the non-linear gain coefficient taken as a fitting parameter, much better agreement is found between experiment and the multi-mode theory than is found with the single-mode theory indicating that this multi-mode theory at least explains the excess noise found in the free-running laser.

While cross-mode non-linear gain certainly explains the measured results, we do not claim to have confirmed that this process is indeed responsible entirely for the excess noise. The origin of this excess noise is perhaps an important area for further investigation since it would appear to be the main limitation to the generation of amplitude squeezed light from room temperature semiconductor lasers. In addition, methods of reducing the excess noise such as injection locking, optical feedback or other mode-stabilizing techniques could play an important role in facilitating the generation of amplitude squeezed light from semiconductor lasers.

6 REFERENCES

[1] D. Walls, "Squeezed states of light," *Nature*, vol. 306, pp. 141–146, 1983.

[2] R. E. Slusher, L. W. Hollberg, B. Yurke, J. C. Mertz, and J. F. Valley, "Observation of squeezed states generated by four wave mixing in an optical cavity," *Phys. Rev. Lett.*, vol. 55, pp. 2409–2412, 1985.

[3] R. M. Shelby, M. D. Levenson, S. H. Perlmutter, R. G. DeVoe, and D. F. Walls, "Broad-band parametric deamplification of quantum noise in an optical fiber," *Phys. Rev. Lett.*, vol. 57, pp. 691–694, 1986.

[4] L. Wu, H. J. Kimble, J. L. Hall, and H. Wu, "Generation of squeezed states by parametric down conversion," *Phys. Rev. Lett.*, vol. 57, pp. 2520–2523, 1986.

[5] B. E. A. Saleh and M. C. Teich, "Information transmission with photon-number-squeezed light," *Proc. IEEE*, vol. 80, pp. 451–460, 1992.

[6] J. G. Rarity and P. R. Tapster, "Quantum communications," *Appl. Phys. B*, vol. 55, pp. 298–303, 1992.

[7] M. T. Jaekel and S. Reynaud, "Quantum limits to interferometric measurements," *Europhys. Lett.*, vol. 13, pp. 301–306, 1990.

[8] E. S. Polzik, J. Carri, and H. J. Kimble, "Spectroscopy with squeezed light," *Phys. Rev. Lett.*, vol. 68, pp. 3020–3023, 1992.

Downloaded From: https://www.spiedigitallibrary.org/conference-proceedings-of-spie on 7/10/2018
Terms of Use: https://www.spiedigitallibrary.org/terms-of-use

[9] Y. Yamamoto, S. Machida, and O. Nilsson, "Amplitude squeezing in a pump-noise-suppressed laser oscillator," *Phys. Rev. A*, vol. 34, pp. 4025–4041, 1986.

[10] Y. Yamamoto and S. Machida, "High-impedance suppression of pump fluctuation and amplitude squeezing in semiconductor lasers," *Phys. Rev. A*, vol. 35, pp. 5114–5130, 1987.

[11] W. H. Richardson, S. Machida, and Y. Yamamoto, "Squeezed photon-number noise and sub-poissonian electrical partition noise in a semiconductor laser," *Phys. Rev. Lett.*, vol. 66, pp. 2867–2870, 1991.

[12] S. Machida, Y. Yamamoto, and Y. Itaya, "Observation of amplitude squeezing in a constant-current-driven semiconductor laser," *Phys. Rev. Lett.*, vol. 58, pp. 1000–1003, 1987.

[13] H. Wang, M. J. Freeman, and D. G. Steel, "Squeezed light from injection-locked quantum well lasers," *Phys. Rev. Lett.*, vol. 71, pp. 3951–3954, 1993.

[14] M. J. Freeman, H. Wang, D. G. Steel, R. Craig, and D. R. Scifres, "Wavelength-tunable amplitude-squeezed light from a room-temperature quantum well laser," *Opt. Lett.*, vol. 18, pp. 2141–2143, 1993.

[15] R. Lang and K. Kobayashi, "External optical feedback effects on semiconductor injection laser properties," *IEEE J. Quantum Electron.*, vol. QE-16, pp. 347–355, 1980.

[16] E. Patzak, H. Oleson, A. Sugimura, S. Saito, and T. Mukai, "Spectral linewidth reduction in semiconductor lasers by an external cavity with weak optical feedback," *Electron. Lett.*, vol. 19, pp. 938–940, 1983.

[17] K. Vahala and A. Yariv, "Detuned loading in coupled cavity semiconductor lasers - effect on quantum noise and dynamics," *Appl. Phys. Lett.*, vol. 45, pp. 501–503, 1984.

[18] D. R. Hjelme, A. R. Mickelson, and R. G. Beausoleil, "Semiconductor laser stabilization by external optical feedback," *IEEE J. Quantum Electron.*, vol. 27, pp. 352–372, 1991.

[19] A. Yariv, R. Nabiev, and K. Vahala, "Self-quenching of the fundamental phase and amplitude noise in semiconductor lasers with dispersive loss," *Opt. Lett.*, vol. 15, pp. 1359–1361, 1990.

[20] C. H. Henry, "Theory of the linewidth of semiconductor lasers," *IEEE J. Quantum Electron.*, vol. QE-18, pp. 259–264, 1982.

[21] K. Vahala and A. Yariv, "Semiclassical theory of noise in semiconductor lasers - part I and II," *IEEE J. Quantum Electron.*, vol. QE-19, pp. 1096–1109, 1983.

[22] E. Patzak, A. Sugimura, S. Saito, T. Mukai, and H. Oleson, "Semiconductor laser linewidth in optical feedback configurations," *Electron. Lett.*, vol. 19, pp. 1026–1027, 1983.

[23] F. Favre, D. L. Guen, and J. C. Simon, "Optical feedback effects upon laser diode oscillation field spectrum," *IEEE J. Quantum Electron.*, vol. QE-18, pp. 1712–1717, 1982.

[24] B. Dahmani, L. Hollberg, and R. Drullinger, "Frequency stabilization of semiconductor lasers by resonant optical feedback," *Opt. Lett.*, vol. 12, pp. 876–878, 1987.

[25] P. H. Laurent, A. Clairon, and C. H. Bréant, "Frequency noise analysis of optically self-locked diode lasers," *IEEE J. Quantum Electron.*, vol. 25, pp. 1131–1142, 1989.

[26] Y. Shevy, J. Iannelli, J. Kitching, and A. Yariv, "Self-quenching of the semiconductor laser linewidth below the Schawlow-Townes limit by using optical feedback," *Opt. Lett.*, vol. 17, pp. 661–663, 1992.

[27] P. Spano, S. Piazzolla, and M. Tamburrini, "Theory of noise in semiconductor lasers in the presence of optical feedback," *IEEE J. Quantum Electron.*, vol. QE-20, pp. 350–357, 1984.

[28] J. Kitching, R. Boyd, A. Yariv, and Y. Shevy, "Amplitude noise reduction in semiconductor lasers with weak, dispersive optical feedback," *Opt. Lett.*, vol. 19, pp. 1331–1333, 1994.

Downloaded From: https://www.spiedigitallibrary.org/conference-proceedings-of-spie on 7/10/2018
Terms of Use: https://www.spiedigitallibrary.org/terms-of-use

[29] H. Haug, "Quantum-mechanical rate equations for semiconductor lasers," *Phys. Rev.*, vol. 184, pp. 338–348, 1969.

[30] K. G. Libbrecht and J. L. Hall, "A low-noise high-speed diode laser current controller," *Rev. Sci. Instrum.*, vol. 64, pp. 2133–2135, 1993.

[31] Y. Shevy, J. Kitching, and A. Yariv, "Linewidth reduction and frequency stabilization of a semiconductor laser with a combination of FM sideband locking and optical feedback," *Opt. Lett.*, vol. 18, pp. 1071–1073, 1993.

[32] G. P. Agarwal, "Line narrowing in a single-mode injection laser due to external optical feedback," *IEEE J. Quantum Electron.*, vol. QE-20, pp. 468–471, 1984.

[33] C. B. Su, J. Schlafer, and R. B. Lauer, "Explanation of low-frequency relative intensity noise in semiconductor lasers," *Appl. Phys. Lett.*, vol. 57, pp. 849–851, 1990.

[34] S. Inoue, H. Ohzu, S. Machida, and Y. Yamamoto, "Quantum correlation between longitudinal-mode intensities in a multimode squeezed semiconductor laser," *Phys. Rev. A*, vol. 46, pp. 2757–2765, 1992.

Downloaded From: https://www.spiedigitallibrary.org/conference-proceedings-of-spie on 7/10/2018
Terms of Use: https://www.spiedigitallibrary.org/terms-of-use