Quantitative Calculation of Electro-Optic Coefficients of Diatomic Crystals

Chun-Ching Shih and Amnon Yariv[(a)]
Department of Applied Physics, California Institute of Technology, Pasadena, California 91125
(Received 19 September 1979)

The bond-charge dielectric theory of Phillips and Van Vechten is applied to the calculation of the electro-optic tensor coefficients. The agreement of the theoretical predictions with experimental values in the case of zinc blende and wurtzite crystals is very good.

The second-order nonlinear optical response of asymmetric crystals is usually represented by the relation $P_i^{(\omega+\Omega)}=\chi_{ijk}E_j^{(\omega)}E_k^{(\Omega)}$ between the amplitude of the induced polarization at $\omega+\Omega$ and the inducing field amplitudes at ω and Ω. The case when both ω and Ω are optical frequencies, that is, frequencies above the lattice response but below optical absorption, has been considered by Levine.[1] He used the localized bond-charge model [see Fig. 1(a)] of Phillips and Van Vechten[2,3] (PV) which attributes the dielectric response of covalent crystals to the localized bond charge resulting in a linear susceptibility:

$$\chi=(h\Omega_p)^2/E_g^2. \tag{1}$$

Here Ω_p is the plasma frequency due to valence electrons and E_g, the effective energy gap, is given by $E_g^2=E_h^2+C^2$, where E_h is the homopolar component and C the heteropolar (ionic) component of the gap energy. Levine starts with the linear dielectric response $P_i^{(\omega)}=\chi_{ij}E_j^{(\omega)}$, taking

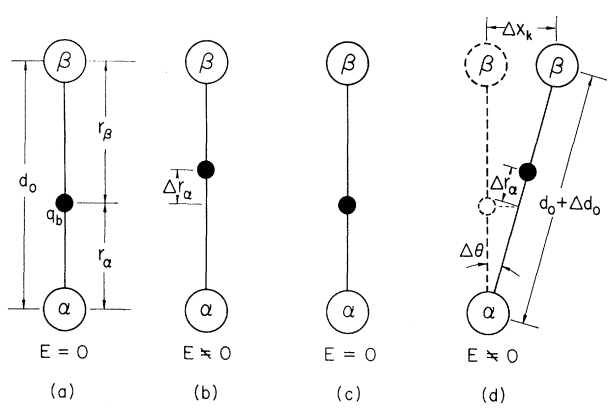

FIG. 1. The response of the ions and the bond charge to the applied electric field. In (a) and (b) the frequency of the field is higher than the lattice response. Only the bond charge is displaced, while the ions remain stationary. In (c) and (d) the frequency of the field is lower than the lattice response. It induces a displacement of the bond charge (Δr_α), a variation of the bond length (Δd_0), and a bond rotation ($\Delta\theta$).

χ_{ij} to be an instantaneous function of the second field $E_k^{(\Omega)}$. This field causes a change $\Delta r_\alpha(=-\Delta r_\beta)$ in the bond charge position, as shown in Fig. 1(b), which oscillates at Ω. The explicit dependence of E_g and C on r_α given by PV is then used to obtain χ_{ijk}, where

$$\begin{aligned}\chi_{ij}&=\chi_{ij}^{(0)}+\Delta\chi_{ij}(t)\\&=\chi_{ij}^{(0)}+2\chi_{ijk}E_k^{(\Omega)}\cos\Omega t.\end{aligned} \tag{2}$$

If the frequency Ω is below the lattice response region (we will refer to it in this case as "low"), then in addition to the purely electronic nonlinear response described above we now have a contribution to χ_{ijk} due to the fact that now the crystal ions are capable of following the field $E_k^{(\Omega)}\cos\Omega t$. This is illustrated in Figs. 1(c) and 1(d). In addition to the displacement Δr_α of the covalent bond charge we now have an elongation Δd_0 of the atomic separation as well as a rotation $\Delta\theta$ of the bond direction, both caused by the ionic displacement Δx_k. Δx_k is obtained from "low"-frequency dielectric constant measurements and is used to determine d_0 and $\Delta\theta$. We use, in the spirit of Levine,[1] the change Δd_0 to calculate the corresponding change $\Delta\chi\cos\Omega t$ in bond susceptibility. This will give rise to a polarization $P_i^{(\omega+\Omega)}=\chi_{ijk}E_j^{(\omega)}E_k^{(\Omega)}$. A second contribution to χ_{ijk} is due to the rocking at Ω of the bond angle ($\theta=\theta_0+\Delta\theta\cos\Omega t$) which yields a dipole component along the direction i at $(\omega+\Omega)$ even when $\Delta d_0=0$.

In what follows we will obtain expressions for the ionic contributions to χ_{ijk} which are due to Δd_0 and $\Delta\theta$. When the result is added algebraically to χ_{ijk}^{elec}, as measured by second-harmonic-generation experiments or calculated by Levine,[1] the result is the total nonlinear tensor $\chi_{ijk}=\chi_{ijk}^{\text{ionic}}+\chi_{ijk}^{\text{elec}}$. The constants χ_{ijk} thus determined are those which characterize the linear electro-optic (Pockels) effect. The relationship between the conventionally defined electro-optic tensor r_{ijk} and χ_{ijk} is

$$\chi_{ijk}=-(\epsilon_i\epsilon_j/2\epsilon_0)r_{ijk}. \tag{3}$$

The linear susceptibility of a diatomic crystal

© 1980 The American Physical Society

is given as $\chi=(h\Omega_p)^2/E_g^2$.[2] The ionicity and covalency of the bond are defined as $f_i=C^2/E_g^2$, $f_c=E_h^2/E_g^2$.[3] The expressions used in the evaluation of E_h and C are[1,2]

$$E_h \propto r_0^{-s}, \quad s=2.48, \tag{4}$$

$$C \propto \exp(-k_s r_0)(Z_\alpha/r_\alpha - Z_\beta/r_\beta)e^2, \tag{5}$$

$$r_\alpha \simeq r_\beta \simeq r_0 = d_0/2,$$

where $d_0=r_\alpha+r_\beta$ is the bond length, $r_{\alpha,\beta}$ are the atomic radii, and $\exp(-k_s r_0)$ is the Thomas-Fermi screening factor. In order to consider crystals with highly unequal atomic radii, a generalized form for E_h was proposed[1] as

$$E_h^- \propto r_0^{2s}\frac{[(r_\alpha-r_c)^{2s}+(r_\beta-r_c)^{2s}]}{2(r_0-r_c)^{2s}}, \tag{6}$$

where r_c is the average core radius.

The linear macroscopic susceptibility tensor χ_{ij} is related to the bond polarizability β_n by

$$\chi_{ij}=V^{-1}\sum_n \alpha_{ni}\alpha_{nj}\beta_n, \tag{7}$$

where V is the volume of unit cell, α_{ni} is the direction cosine of the nth bond, and the summation is over all the bonds in a unit cell. Although PV describe the macroscopic susceptibility χ in terms of the average energy gap, we assume that E_h and C are also related to the bond polarizability directly, i.e.,

$$\beta_n \propto (h\Omega_p)^2/E_g^2. \tag{8}$$

When the bond length varies, it is reasonable to assume that the ratio of r_α and r_β remains constant. With this assumption, the two independent parameters, $r_{\alpha,\beta}$, can be transformed into two quantities which relate directly to the macroscopic properties of crystals:

$$\begin{aligned}\Delta r_\alpha &= (r_\alpha/d_0)\Delta d_0+\delta\\ \Delta r_\beta &= (r_\beta/d_0)\Delta d_0-\delta,\end{aligned} \tag{9}$$

where δ is the displacement of the bond charge in the case of no bond elongation, $\Delta d_0=0$. From Eqs. (5), (6), (8), and (9), the change of bond polarizability is obtained as (here we drop the bond index n)

$$\frac{\Delta\beta}{\beta}=\left[f_i\left(1+\frac{k_s r_0}{2}\right)+sf_c-\frac{3}{2}\right]\frac{\Delta d_0}{r_0}+\left[4f_i\frac{Z_\alpha+Z_\beta}{Z_\alpha-Z_\beta}+S(2s-1)\frac{f_c\rho d_0^2}{(r_0-r_c)^2}\right]\frac{\delta}{d_0}, \tag{10}$$

where $\rho=(r_\alpha-r_\beta)/(r_\alpha+r_\beta)$. In the first term, $k_s r_0/2$ is obtained because the screening wave number k_s is proportional to $d_0^{-1/2}$,[4] and the number $-\frac{3}{2}$ is because Ω_p is proportional to $d_0^{-3/2}$. The second term on the right-hand side of (10) is identical to that obtained by Levine in his calculation of the nonlinear optical susceptibility.[5] The first term, which is proportional to Δd_0, is thus the ionic contribution of a single bond due to bond stretching.

The rotational contribution can be obtained by considering the changes in bond direction cosines. These are related to the ionic displacement Δx_k by $\Delta\alpha_{ni}=(\delta_{ik}-\alpha_{ni}\alpha_{nk})\Delta x_k$.

From (7) we have

$$\Delta\chi_{ij}=V^{-1}\sum_n(\alpha_{ni}\alpha_{nj}\Delta\beta_n+\Delta\alpha_{ni}\alpha_{nj}\beta_n+\alpha_{ni}\Delta\alpha_{nj}\beta_n). \tag{11}$$

The complete ionic contribution to the nonlinear susceptibility is thus

$$\Delta\chi_{ij}^{\text{ion}}=\{\sum_n(\beta_n/Vr_0)[f\alpha_{ni}\alpha_{nj}\alpha_{nk}+\tfrac{1}{2}(\alpha_{ni}\delta_{jk}+\alpha_{nj}\delta_{ik})]\}\Delta x_k, \tag{12}$$

where

$$f=f_i[1+\tfrac{1}{2}(k_s r_0)]+sf_c-2.5=[(\tfrac{1}{2}k_s r_0)-1.48]f_i-0.02. \tag{13}$$

Δx_k is related to the dielectric constant of the crystal as

$$Ne_c^*\Delta x_k=\epsilon_0(\epsilon_{dc}'-\epsilon_\infty')E_k, \tag{14}$$

where N is the number of pairs of atoms per unit cell, e_c^* is the Callen effective ionic charge,[6] ϵ_{dc}' is the relative dielectric constant, ϵ_∞' is the relative optical permittivity, and E_k is the low-frequency electric-field component along the k direction.

Using (3) we obtain the final working expression for the ionic component of the electro-optic tensor:

$$r_{ijk}^{\text{ion}}=-\frac{\epsilon_0(\epsilon_{dck}'-\epsilon_{\infty k}')}{VNe_c^*\epsilon_i'\epsilon_j'}\{\sum_n\frac{\beta_n}{r_0}[f\alpha_{ni}\alpha_{nj}\alpha_{nk}+\tfrac{1}{2}(\alpha_{ni}\delta_{jk}+\alpha_{nj}\delta_{ik})]\}. \tag{15}$$

TABLE I. Comparison of calculated and measured electro-optic coefficients (clamped) of zinc blende (r_{14}) and wurtzite (r_{33}) crystals (in units of 10^{-12} m/V). The signs of $r_{\text{exptl.}}$ have not been determined except where specified.

	Zinc blende						Wurtzite		
	GaAs	GaP	ZnSe	ZnS	ZnTe	CuCl	ZnS	CdS	CdSe
ϵ_{dc}' [a]	13.2	12.0	9.1	8.3	10.1	7.5	8.7[c]	9.5	10.2
f	−0.09	−0.11	−0.16	−0.18	−0.12	−0.21	−0.18	−0.16	−0.15
e_c^*/e	0.20	0.23	0.33	0.35	0.26	0.27	0.35	0.41	0.36
r_{ionic}	+1.03	+1.53	+2.64	+2.93	+2.07	−5.56	+3.63	+3.80	+3.61
r_{elec} [b]	−2.73	−3.20	−4.68	−4.77	−6.41	+2.66	−5.63	−6.71	−7.40
$r_{\text{sum}}^{\text{theo}}$	−1.7	−1.7	−2.0	−1.8	−4.3	−2.9	−2.0	−2.9	−3.8
$r_{\text{exptl.}}$ [a]	−1.5	−1.1	2.0	1.6	4.3	−2.4	1.8	2.4	4.3

[a] I. P. Kaminow and E. H. Turner, in *Handbook of Lasers*, edited by R. J. Pressley (Chemical Rubber Co., Cleveland, 1971), p. 453.

[b] S. Singh, in *Handbook of Lasers*, edited by R. J. Pressley (Chemical Rubber Co., Cleveland, 1971), p. 489.

[c] I. B. Kobyakov, Kristallografiya 11, 419 (1966) [Soviet Phys. Cryst., 11, 369 (1966)].

For wurtzite crystals, we neglect the small distortion from the perfect tetragonal structure. β_n can be expressed in terms of the measured macroscopic susceptibility χ as in (7), and the electro-optic coefficients of zinc blende and wurtzite crystals are obtained as follows: zinc blende,

$$r_{14}^{\text{ion}} = 0.3689 a_0^2 w f/(e_c^*/e); \tag{16}$$

wurtzite,

$$r_{33}^{\text{ion}} = -2r_{13}^{\text{ion}} = 0.4260 a_{\text{eff}}^2 w f/(e_c^*/e), \tag{17}$$

where $a_{\text{eff}}^3 = \sqrt{3} a_0^2 c_0$, a_0 and c_0 are the lattice constants, $w = (\epsilon - 1)(\epsilon_{dc} - \epsilon)/\epsilon^2$, and r_{ij} are in units of 10^{-12} m/V, a_0 and a_{eff} in angstroms. Values of the parameters ϵ_{dc}', f, e_c^* are listed in Table I.

The dependence of the electro-optic coefficients r_{ijk}^{ion} on the bond geometry is perhaps the most illuminating feature to emerge from this work. This dependence is contained in curly brackets in (15). For diatomic single-bond crystals β_n is a constant and the geometrical factor becomes

$$G_{ijk} = [\sum_{\substack{\text{bonds}\\ n}} f \alpha_{ni} \alpha_{nj} \alpha_{nk} + \tfrac{1}{2}(\alpha_{ni}\delta_{jk} + \alpha_{nj}\delta_{ik})].$$

The factor f is typically $|f| \leq 0.3$. Table II contains a listing of these factors for some key directions (ijk) in crystals of the zinc blende, wurtzite and $LiNbO_3$ classes. It follows immediately that when $\sum_n \alpha_{ni} \neq 0$ the second term in G_{ijk} is an order of magnitude larger than the first one. In such crystals the ionic contribution to r_{ijk} is about an order of magnitude larger than the electronic term. This is the case in $LiNbO_3$ or $LiTaO_3$. When $\sum_n \alpha_{ni} = 0$, as in zinc blende and wurtzite, we have to settle for the smaller term $\sum_n f \alpha_{ni} \alpha_{nj} \alpha_{nk}$. This is the *main* reason why $LiTaO_3$ has $r_{33} = 30.3$

TABLE II. Comparison of the geometrical factors between zinc blende, wurtzite, and $LiNbO_3$. The quantities shown have been divided by the number of bonds per unit cell, n_b.

	Zinc blende	Wurtzite	$LiNbO_3$ $(\text{Nb-O})_{\text{short}}$	$LiNbO_3$ $(\text{Nb-O})_{\text{long}}$
$n_b^{-1}\Sigma\alpha_{n_3}$	0	0	0.475	−0.669
$n_b^{-1}\Sigma\alpha_n^2$	$\frac{1}{3}$	$\frac{1}{3}$	$\frac{1}{3}$	$\frac{1}{3}$
$n_b^{-1}\Sigma\alpha_{n_1}^2\alpha_{n_3} = n_b^{-1}\Sigma\alpha_{n_2}^2\alpha_{n_3}$	0	$-\frac{1}{9}$	0.184	−0.185
$n_b^{-1}\Sigma\alpha_{n_3}^3$	0	$\frac{2}{9}$	0.107	−0.300

$\times 10^{-12}$ m/V, while in GaAs and ZnS, $r_{41} \sim 2\times 10^{-12}$ m/V.

The effective charge e_c^* is related to the Szigeti effective charge e_s^* by $e_c^* = [(\epsilon_\infty + 2)/3\epsilon_\infty] e_s^*$. The value of e_c^*/e varies from 0.2 to 0.4 and seems to be independent of the number of valence electrons. The calculated values of r_{ijk}^{ion} using (17) and (18) are shown in Table I as r_{ionic}. The pure electronic contribution is entered as r_{elec}. It is obtained directly from the experimentally determined second-harmonic-generation coefficient by $r_{lk} = -4d_{lk}/\epsilon^2$. For most of the cyrstals in Table I, r_{ionic} is positive and r_{elec} is negative. Therefore, the predicted electro-optic coefficients, $r_{\text{sum}}^{\text{theo}} = r_{\text{ionic}} + r_{\text{elec}}$, involve the algebraic addition or cancellation of two numbers of comparable values. The only exception is CuCl. Because of the unfilled shell in Cu, the sense of bond polarization in CuCl is different from that in other crystals.[7] The signs of r_{ionic} and r_{elec} of CuCl are thus different from others. However, the magnitude of r_{ionic} is larger than that of r_{elec} in CuCl. We still obtain a negative electro-optic coefficient for CuCl. The predicted values in Table I are in good agreement with experiment. The worst case is GaP. It is interesting to note that the electronic contribution is about double the ionic contribution. This is in excellent agreement with the experimental observation.[8]

We intend to extend this model to complex crystals with different point-group symmetries. The generalization of the bond parameters used above to multibond crystals has already been considered. The one parameter which will need added thought is e_s^*, the effective ionic charge. It was found empirically to be equal to $C/\hbar\omega_p$ in diatomic crystals.[9] If this relation and $e_c^* = [(\epsilon_\infty + 2)/3\epsilon_\infty] e_s^*$ are valid in the more complex crystals, then our model can be applied to these cases. Calculations now in progress on KH_2PO_4, $LiNbO_3$, $LiTaO_3$, and ternary chalcopyrite crystals will be reported separately.

The authors acknowledge gratefully numerous discussions and suggestions from A. Gentile. This research was supported in part by the U. S. Air Force Office of Science Research.

[a]Consultant: Hughes Research Laboratories, Malibu, Cal. 90265.

[1]B. F. Levine, Phys. Rev. Lett. 22, 787 (1969), and 25, 440 (1970).

[2]J. C. Phillips, Phys. Rev. Lett. 20, 550 (1968).

[3]J. A. Van Vechten, Phys. Rev. 182, 891 (1969), and 187, 1007 (1969).

[4]C. Kittel, *Introduction to Solid State Physics*, (Wiley, New York, 1976), 5th ed.

[5]B. F. Levine, Phys. Rev. B 7, 2600 (1973).

[6]H. B. Callen, Phys. Rev. 76, 1394 (1949).

[7]I. P. Kaminow and E. H. Turner, Phys. Rev. B 5, 1564 (1972).

[8]W. L. Faust and C. H. Henry, Phys. Rev. Lett. 17, 1265 (1966).

[9]P. Lawaetz, Phys. Rev. Lett. 26, 697 (1971).

Interfacial Reaction and Schottky Barrier in Metal-Silicon Systems

G. Ottaviani[a] and K. N. Tu
IBM T. J. Watson Research Center, Yorktown Heights, New York 10598

and

J. W. Mayer
California Institute of Technology, Pasadena, California 91125
(Received 14 November 1979)

Electronic states at the metal-silicon interface have previously been postulated in order to explain the pinning of the Fermi level, and the origin of these states has been a matter of some dispute. We propose here that in a reactive interface, such as the interface between Si and transition metals, physical properties of the interface are related to an interfacial layer, and that the relationship is manifest through the correlation between Schottky barrier height and eutectic temperature.

The theory of the Schottky barrier is an important subject concerning solid interfaces and is relevant to applications in microelectronics.[1,2] The classical theory of Schottky assumes that at the interface between a metal and a semiconductor the Fermi levels should match up. This produces

 © 1980 The American Physical Society