University of New Hampshire
University of New Hampshire Scholars' Repository

Doctoral Dissertations | Student Scholarship

Spring 1989

A conceptual design of a propulsion system for an autonomous underwater vehicle

Gerald Sedor
University of New Hampshire, Durham

Follow this and additional works at: https://scholars.unh.edu/dissertation

Recommended Citation
Sedor, Gerald, "A conceptual design of a propulsion system for an autonomous underwater vehicle" (1989). *Doctoral Dissertations*. 1578.
https://scholars.unh.edu/dissertation/1578

This Dissertation is brought to you for free and open access by the Student Scholarship at University of New Hampshire Scholars' Repository. It has been accepted for inclusion in Doctoral Dissertations by an authorized administrator of University of New Hampshire Scholars' Repository. For more information, please contact nicole.hentz@unh.edu.

INFORMATION TO USERS

The most advanced technology has been used to photograph and reproduce this manuscript from the microfilm master. UMI films the text directly from the original or copy submitted. Thus, some thesis and dissertation copies are in typewriter face, while others may be from any type of computer printer.

The quality of this reproduction is dependent upon the quality of the copy submitted. Broken or indistinct print, colored or poor quality illustrations and photographs, print bleedthrough, substandard margins, and improper alignment can adversely affect reproduction.

In the unlikely event that the author did not send UMI a complete manuscript and there are missing pages, these will be noted. Also, if unauthorized copyright material had to be removed, a note will indicate the deletion.

Oversize materials (e.g., maps, drawings, charts) are reproduced by sectioning the original, beginning at the upper left-hand corner and continuing from left to right in equal sections with small overlaps. Each original is also photographed in one exposure and is included in reduced form at the back of the book. These are also available as one exposure on a standard 35mm slide or as a 17" x 23" black and white photographic print for an additional charge.

Photographs included in the original manuscript have been reproduced xerographically in this copy. Higher quality 6" x 9" black and white photographic prints are available for any photographs or illustrations appearing in this copy for an additional charge. Contact UMI directly to order.

U·M·I

University Microfilms International
A Bell & Howell Information Company
300 North Zeeb Road, Ann Arbor, MI 48106-1346 USA
313/761-4700 800/521-0600

Reproduced with permission of the copyright owner. Further reproduction prohibited without permission.

Reproduced with permission of the copyright owner. Further reproduction prohibited without permission.

Order Number 8921939

A conceptual design of a propulsion system for an autonomous underwater vehicle

Sedor, Gerald, Ph.D.

University of New Hampshire, 1989

Copyright ©1989 by Sedor, Gerald. All rights reserved.

U·M·I
300 N. Zeeb Rd.
Ann Arbor, MI 48106

Reproduced with permission of the copyright owner. Further reproduction prohibited without permission.

Reproduced with permission of the copyright owner. Further reproduction prohibited without permission.

A CONCEPTUAL DESIGN OF A PROPULSION SYSTEM FOR AN AUTONOMOUS UNDERWATER VEHICLE

by

GERALD SEDOR
BS, United States Naval Academy, 1957
MS, Massachusetts Institute of Technology, 1970
NAVENG, Massachusetts Institute of Technology, 1970

DISSERTATION

Submitted to the University of New Hampshire
in Partial Fulfillment of
the Requirements for the Degree of

Doctor of Philosophy

in

Engineering

May 1989

Reproduced with permission of the copyright owner. Further reproduction prohibited without permission.

This dissertation has been examined and approved.

Dissertation Director, Robert W. Corell
Professor of Mechanical Engineering

Charles K. Taft
Professor of Mechanical Engineering
and Chairman

John A. Wilson
Professor of Mechanical Engineering

David E. Limbert
Professor of Mechanical Engineering

L. David Meeker
Professor of Mathematics

R. Daniel Bergeron
Associate Professor of Computer Science

Robert E. Phillips
Adjunct Professor of Mechanical
Engineering

Date May 5, 1989

Reproduced with permission of the copyright owner. Further reproduction prohibited without permission.

ALL RIGHTS RESERVED

1989

Gerald Sedor

Reproduced with permission of the copyright owner. Further reproduction prohibited without permission.

DEDICATION

To Alma

Reproduced with permission of the copyright owner. Further reproduction prohibited without permission.

PREFACE

Nothing in the world can take the place of PERSISTENCE.

> TALENT will not -- nothing is more common than unsuccessful men with talent.
>
> GENIUS will not -- unrewarded genius is almost a proverb.
>
> EDUCATION will not -- the world is full of educated derelicts.

Persistence and determination alone are omnipotent. The slogan "Press On" has solved and always will solve the problems of the human race.

- Calvin Coolidge

Reproduced with permission of the copyright owner. Further reproduction prohibited without permission.

TABLE OF CONTENTS

DEDICATION iv

PREFACE v

LIST OF TABLES ix

LIST OF FIGURES x

ABSTRACT xi

SECTION PAGE

I. PURPOSE AND ORGANIZATION 1

Introduction 1

Objectives 7

Scope 9

Assumptions 11

Organization 13

II. REVIEW OF RELATED MATERIAL 16

Introduction 16

Energy Systems 19

Thruster Systems 22

Knowledge-Based Systems 31

Reliability 46

Summary 52

III. DESIGN PROCEDURES 54

Introduction 54

Systems Design Criteria 57

Design Analyses 59

Summary 72

Reproduced with permission of the copyright owner. Further reproduction prohibited without permission.

SECTION PAGE

IV. DESCRIPTION OF CONCEPTUAL DESIGN 73

Introduction 73

Heat Source System 77

Power Generating System 79

Thruster System 83

Management System 87

System Reliability 98

Summary 104

V. SIMULATION 106

Introduction 106

Objectives 107

Scope 107

Operation 109

Summary 112

VI. CONCLUSIONS AND RECOMMENDATIONS 113

Introduction 113

Discussion of Results 114

Conclusions 121

Future Investigations 123

LIST OF REFERENCES 129

APPENDICES

A. Energy Systems 138

A.1. Review of Energy Systems 139

A.2. Energy Systems Evaluation Data 154

A.3. Power and Energy Calculations 162

A.4. Energy Systems Thermal Analyses 170

Reproduced with permission of the copyright owner. Further reproduction prohibited without permission.

SECTION PAGE

APPENDICES

B. Weight and Volume Calculations 177

B.1. Vehicle Displacement and Volume 178

B.2. Primary Power System 179

B.3. Backup Power System 183

B.4. Summary of Weights and Volumes 184

C. Reliability Data and Calculations 185

C.1. Reliability Data Tables 186

C.2. Reliability Block Diagrams 189

C.3. Reliability Calculations 194

D. Propulsion Plant Data 199

D.1. Thruster System Data 200

D.2. Sensor Data 202

E. Computer Program Information and Data 205

E.1. Description of Computer Programs 206

E.2. PPM Classification Rules 209

E.3. PPM Knowledge Base Logic 210

Reproduced with permission of the copyright owner. Further reproduction prohibited without permission.

LIST OF TABLES

TABLE		PAGE
1.	Missions and Tasks of Remotely Operated Vehicles	3
2.	Missions and Tasks of Autonomous Underwater Vehicles	4
3.	Comparison of Remotely Operated Vehicles and Autonomous Underwater Vehicles	5
4.	Autonomous Underwater Vehicle Summary	17
5.	Generic Categories of Expert System Applications	32
6.	Summary Analysis of Knowledge Representation Techniques	33
7.	Applications of Diagnostic Expert Systems	36
8.	Classification of Diagnostic Expert Systems	39
9.	Knowledge Representation Concepts Used in Diagnostic Expert Systems	40
10.	Near Real-Time Applications of Monitoring and Diagnostic Expert Systems	41
11.	Summary of Expert System Building Systems	45
12.	Phases of Engineering Design	55
13.	Summary Results of Evaluation of Energy Systems	66
14.	Summary Results of Sensitivity Analysis of Energy Systems Evaluation	67
C.1.1.	Heat Source System Reliability Data	186
C.1.2.	Power Generating System Reliability Data	187
C.1.3.	Thruster System Reliability Data	188

Reproduced with permission of the copyright owner. Further reproduction prohibited without permission.

LIST OF FIGURES

FIGURE		PAGE
1.	Underwater Vehicle Energy Systems	21
2.	Taxonomy of Diagnostic Expert Systems	37
3.	ALMA-1 Propulsion System Functional Breakdown	74
4.	Propulsion System Device Identification	75
5.	Heat Source System Diagram	77
6.	Power Generating System Diagram	80
7.	Thruster System Diagram	84
8.	Propulsion Plant Manager Functional Diagram ..	88
9.	Power System States and Contexts	89
10.	Propulsion System Contexts	91
11.	Description of Criticality Analysis Levels ...	102
12.	Summary of Characteristics of the ALMA-1 Propulsion Plant Concept	117
13.	ALMA-1 Propulsion Plant Arrangement	118
C.2.1.	Reliability Block Diagram: Heat Source System .	189
C.2.2.	Reliability Block Diagram: Power Generating System	190
C.2.3.	Reliability Block Diagram: Thruster System ...	191
C.2.4.	Reliability Block Diagram: Normal Propulsion Mode	192
C.2.5.	Reliability Block Diagram: Propulsion System ..	193

Reproduced with permission of the copyright owner. Further reproduction prohibited without permission.

ABSTRACT

A CONCEPTUAL DESIGN OF A PROPULSION SYSTEM
FOR AN AUTONOMOUS UNDERWATER VEHICLE

by

Gerald Sedor
University of New Hampshire, May, 1989

The need for developing propulsion systems to support missions of increased endurance for autonomous underwater vehicles is investigated and a conceptual system is proposed, based on currently available technology and desired system characteristics.

The investigation evaluates and ranks alternative energy sources and proposes the use of a closed Brayton cycle gas turbine power plant using a chemical energy heat source with a metallic fuel. A thruster system using electric propulsion motors and screw propellers is selected. Evaluation factors include reliability, depth independent operation, weight, endurance, quietness and efficiency. Reliability of the proposed system is analyzed and the design modified to meet proposed reliability requirements. A knowledge-based system is developed to manage the operation of the propulsion plant in an autonomous manner. A simulation system is developed using Common Lisp and the operation of the propulsion plant and its knowledge-based management system are evaluated using the simulator.

Reproduced with permission of the copyright owner. Further reproduction prohibited without permission.

I. PURPOSE AND ORGANIZATION

Introduction

The design of engineering systems involving a direct man-machine interface has increasingly concentrated on expanding the role assigned to the machine part of the interface. Driven primarily by cost and efficiency considerations, many such systems have become completely automated. Tasks previously accomplished by human operators are now routinely being accomplished by robotic devices.

The design of underwater vehicles is undergoing a similar evolution with respect to the man-machine interface. Early efforts at automation involved such functions as depth and course control of manned submersibles. Subsequent efforts over the past two decades have led to the development of a large variety of unmanned remotely-operated vehicles (ROV). These vehicles, which are generally small but sophisticated platforms for a variety of sensors, are usually powered and controlled via a tether or umbilical to a surface operator. Table 1, based on information contained in reference [1], lists missions and tasks currently being accomplished by ROVs world-wide. While the tether simplifies the design of many vehicle subsystems, it also results in placing significant limitations on vehicle operating flexibility, mobility and range.

The next step in the evolution of automating underwater

Reproduced with permission of the copyright owner. Further reproduction prohibited without permission.

vehicles has been the elimination of the tether and the development of an autonomous underwater vehicle (AUV), which is controlled by self-contained microprocessors and software based on artificial intelligence (AI) techniques. Although this effort is still in its infancy, prototype vehicles have been designed, built and tested which have demonstrated the feasibility of such vehicles to accomplish simple missions involving short time durations. Table 2 provides a listing of tasks assigned or planned for AUVs [1]. The use of AI and knowledge-based computer programs has enabled AUVs to reason about their environment and apply the results while carrying out their mission. Table 3 provides a comparison of some of the major advantages and disadvantages of AUVs versus ROVs.

As AUVs transition from the development prototype stage to the commercial application stage, it is expected that AUV missions and tasks will become more complex and sophisticated and a demand for greater mission durations and ranges will develop. Current AUVs rely almost entirely upon electrical storage batteries for their source of energy. This reliance limits AUVs to mission durations of about 10 hours or less and ranges of less than about 50 miles. Improvements in durations and ranges will require the development of new energy systems for AUVs.

The development of new AUV energy systems will most likely be based on a dual approach. The first approach, which may be classified as the "gradual approach", would

Reproduced with permission of the copyright owner. Further reproduction prohibited without permission.

Table 1. Missions and Tasks of Remotely Operated Vehicles

- Observation and Inspections Related to:
  - Structures
  - Pipelines
  - Cables
  - Geology
  - Pollution
  - Non-Destructive Testing
- Location and Identification of Underwater Objects
- Monitoring of Bottom or Water Column Conditions
- Bottom Surveys
- Diver Assistance
- Installation and Retrieval of Underwater Systems
- Maintenance of Underwater Systems
- Underwater Drilling Support
- Scientific Research
- Military Applications

Reproduced with permission of the copyright owner. Further reproduction prohibited without permission.

Table 2. Missions and Tasks of Autonomous Underwater Vehicles

- Underwater Search and Identification
- Under Ice Mapping
- Underwater Inspection and Observation
- Bottom Photography and Topography
- Bottom Surveys
- Bottom Sampling
- Vehicle Low Drag Studies
- Testing of Submarine Control Systems
- Military Applications

Reproduced with permission of the copyright owner. Further reproduction prohibited without permission.

Table 3. Comparison of Remotely Operated Vehicles and Autonomous Underwater Vehicles

REMOTELY OPERATED VEHICLES (ROV)	AUTONOMOUS UNDERWATER VEHICLES (AUV)
ADVANTAGES:	
• Full operator control	• Minimal required support facilities
• Large power source possible from topside	• High speeds feasible
• Wide band communications and imagery available	• Longer ranges feasible
• Immediate feedback of malfunctions to operator	• Lower system cost
• Immediate feedback of data to operator	• Greater operational flexibility possible
DISADVANTAGES:	
• Limited range	• Limited communications
• Limited speeds	• Limited work capability
• Additional drag of tether	• Energy limitations
• Overall system cost	• Must possess adaptive intelligence

Reproduced with permission of the copyright owner. Further reproduction prohibited without permission.

involve a series of gradual improvements through comparable improvements in performance of electrical storage batteries and, perhaps, the use of fuel cells. A second and more forward-looking approach, which may be classified as the "step change approach", would have as its objective a significant improvement in mission duration/range. This approach will require the development and application of energy sources for AUVs that have not yet been used for this type of vehicle.

In addition to energy source considerations, the development of an AUV capable of long ranges or extended mission durations (hereinafter referred to as "long range AUV", or "LRAUV") will require a more thorough consideration of another design factor, namely, reliability. For an unmanned autonomous system, reliable operation for the extent of a mission is of primary importance. When the mission duration is relatively short (i.e., a few hours), achieving reliable operation with relatively simple systems is not a difficult problem. As the mission duration becomes extended to several days or several weeks, and the energy systems to support such missions become more complex, reliability becomes a more significant consideration.

This study considers some of the major factors involved in making a "step change" improvement in AUV mission durations from the aspect of designing a reliable propulsion system to accommodate such improvements. Alternative energy sources are evaluated and a feasible system selected as the

Reproduced with permission of the copyright owner. Further reproduction prohibited without permission.

basis for a conceptual design. A major constraint on the selection of systems and components is that only those systems and components which are currently available in either operational or prototype systems were considered. This constraint forces a more realistic approach to the design, while providing a basis for obtaining and using reliability data for individual components to support system reliability analyses.

Reliability is considered not only in the selection of an energy system, but in the design of the entire propulsion system. The conceptual design also includes the design of a knowledge-based software system to manage the operation of the propulsion system in an autonomous manner. The system is modelled and a computer simulation developed to demonstrate operation of the system and its ability to diagnose and resolve anomalies.

Objectives

The basic objective of this study is to develop a conceptual design for a reliable propulsion system for use in a long range autonomous vehicle (LRAUV), including the development of a knowledge-based expert system to manage the autonomous operation of the propulsion system. This objective will be achieved by accomplishment of the following tasks:

(1) Identify and evaluate candidate energy sources for

Reproduced with permission of the copyright owner. Further reproduction prohibited without permission.

a LRAUV, including the development of appropriate factors of evaluation for this application, and select a candidate system for the propulsion system design based on this evaluation.

(2) Analyze and evaluate the reliability of the proposed propulsion system conceptual design and incorporate features within the system design which enhance system reliability.

(3) Develop and integrate within the design a knowledge-based system to manage the operation of the model propulsion system.

(4) Identify and analyze probable anomalies and failures in the operation of the model propulsion system and develop diagnostic and predictive capabilities within the knowledge-based management system that will permit resolution of these anomalies in an autonomous manner.

(5) Develop appropriate software to simulate the operation of the model propulsion system and demonstrate the performance of the knowledge-based expert system in managing the operation of the propulsion system in an autonomous manner.

(6) Evaluate the impact of a knowledge-based system on the conceptual design.

Reproduced with permission of the copyright owner. Further reproduction prohibited without permission.

Scope

General

The scope of this study includes, in general, those actions and research efforts normally associated with the development of a complex system conceptual design. These actions include the identification of sufficient AUV information relative to a long range mission, along with a basic mission operating profile upon which the propulsion system requirements and characteristics could be established.

An extensive literature search is called for to help establish the characteristics of available components and subsystems of candidate systems. The study also includes the development and identification of sound criteria for evaluating candidate systems for the model propulsion plant. The evaluation criteria must, necessarily, reflect the unique nature of a submersible vehicle designed to operate for extended periods of time without human intervention or control. The study includes the selection of the various subsystems of the propulsion system based on the established selection criteria. The selected subsystems are then configured in a manner that best meets mission requirements, including the requirement for high overall system reliability. Extensive reliability analyses of all major components and systems are conducted, and potential failure modes identified.

The scope of this study also includes the development of a knowledge-based expert system to replace the human

Reproduced with permission of the copyright owner. Further reproduction prohibited without permission.

operator and supervisor for the propulsion plant. Modeling of the propulsion system and demonstration of the operation of the expert system manager is a major part of this study. An evaluation of the impact of the knowledge-based expert system on the conceptual design is also included within the scope of the study.

Constraints

The primary constraints or limitations in scope associated with this study include the following:

(1) The conceptual design process is not carried out within the normal context of designing a vehicle, in which all major subsystems are addressed in an iterative manner after a detailed identification of mission requirements. In this study, only the propulsion system is addressed and only those mission requirements are specified which are necessary to help define propulsion plant requirements. This constraint requires that some assumptions be made regarding the AUV mission and vehicle characteristics.

(2) The inclusion of cost factors is considered to be beyond the intended scope of this study.

(3) The selection of subsystems and components for the conceptual design is limited to those items which are commercially available or have had extensive prototype testing. Where specific technical or reliability data were not available, approximations were made based on available data for similar components which may differ in size,

Reproduced with permission of the copyright owner. Further reproduction prohibited without permission.

capacity or other characteristics.

(4) The reliability analyses and computer model include representative system and component malfunctions, and are not intended to completely cover all possibilities. This approach is considered appropriate for a conceptual design, which would be subsequently refined during the detail design phase and prototype testing.

Assumptions

Since this study does not involve the conceptual design of the entire submersible vehicle, certain assumptions must be made with respect to mission requirements and overall vehicle design requirements in order to set the proper context for the study. These assumptions are described below.

Mission Requirements

The following mission requirements for a long range AUV are assumed for purposes of this study:

(1) Mission Duration. Operate continuously and reliably over a period of at least one week (168 hours) in accordance with the established mission profile.

(2) Mission Profile. The vehicle should be capable of operating with reasonable efficiency at vehicle speeds up to 10 knots and with an assumed mission profile as follows:

- Transit Phase: 10 knots for 30% of mission time;
- Search Phase: 5 knots for 60% of mission time;
- Dynamic Positioning Phase: maintain a fixed position over a bottom object (0 knots) in a current of up to 3 knots for 10% of mission time.

Reproduced with permission of the copyright owner. Further reproduction prohibited without permission.

(3) Degraded Mission Capability. In the event that the normal power source becomes inoperable during a mission, a limited backup power source must be available with sufficient capacity to support a low speed transit of at least 30 nautical miles.

Vehicle Characteristics

The vehicle hull is assumed to be a hydrodynamically faired body of revolution (e.g., torpedo-shaped) with a near optimum length-to-diameter ratio of 8 to 1, and overall dimensions of 32 feet in length and 4 feet in diameter. No appendages need to be considered other than horizontal and vertical control surfaces at the stern and any external propulsors.

Propulsion System Characteristics

Mandatory Characteristics. The following mandatory characteristics are assumed for the design:

(1) Power and endurance adequate to meet assumed mission requirements;

(2) Operation independent of the atmosphere;

(3) Operation independent of vehicle depth;

(4) System adaptable to automation;

(5) Propulsion system estimated weight no greater than 50% of vehicle displacement;

(6) Propulsion system estimated volume no greater than 70% of total vehicle volume;

(7) Reliability of the propulsion system of at least

Reproduced with permission of the copyright owner. Further reproduction prohibited without permission.

0.95 in the normal mode and at least 0.98 overall when alternate or emergency modes are included.

Desirable Characteristics. The following characteristics are assumed to be desirable in the design of the propulsion system:

(1) High operational reliability in all modes;

(2) Low weight relative to power and energy;

(3) Relative ease in achieving depth independence;

(4) Low fuel consumption;

(5) Reasonably high efficiency throughout mission;

(6) Quiet operation;

(7) Relative ease in adapting to automatic controls.

These characteristics are used as a basis for evaluating candidate propulsion systems, and are quantified for candidate systems to the extent feasible in order to provide an objective basis for selection of a system for the conceptual design.

Organization

The report of this study is organized in a manner that will allow the reader to proceed in a logical manner from a description of the general domain of underwater vehicles to a detailed investigation of the specific areas of propulsion plant systems and knowledge-based systems for application to long range autonomous underwater vehicles. A brief description of the basic contents in each major section of this report follows:

Reproduced with permission of the copyright owner. Further reproduction prohibited without permission.

Section I: Purpose and Organization

This section establishes the basis for the study and provides general background information on the domain of underwater vehicles. The objectives, limitations, and assumptions of the study are described, and the organization of the report is explained.

Section II: Review of Related Material

This section summarizes the relevant results of a review of the literature in three basic areas of the study:

(1) Energy systems;

(2) Knowledge-based systems, especially those systems related to the functions of monitoring, diagnostics, prediction and control;

(3) Reliability analysis techniques, especially as they pertain to the design process.

Section III: Design Procedures

This section describes the overall design plan, establishes system design characteristics and design criteria, and outlines the analyses used to select the proposed conceptual design. Candidate systems are identified and design analyses of these systems are conducted. Selections are made for the proposed conceptual design.

Section IV: Description of Conceptual Design

This section describes the components and subsystems

Reproduced with permission of the copyright owner. Further reproduction prohibited without permission.

of the selected configuration for the conceptual design. Diagrams, technical data, reliability data, and systems interactions are provided.

Section V: Simulation

This section describes the design and operation of the PPM-SIM simulation program for the propulsion system.

Section VI: Conclusions

The conclusions reached by the study are contained in this section, along with a discussion of the results and recommendations for future investigations.

Appendices:

This section contains information on energy systems obtained in the review phase of the study, as well as tables of technical and reliability data and calculations developed during the study and used as a basis for the design decisions.

Reproduced with permission of the copyright owner. Further reproduction prohibited without permission.

II. REVIEW OF RELATED MATERIAL

Introduction

Submersible Vehicles

Unmanned submersible vehicles operating without a tether or umbilical link to a surface operator or control facility are a relatively recent development. The majority of submersible vehicles categorized as either Autonomous Underwater Vehicles (AUV) or Untethered (Autonomous) Remotely Operated Vehicles in the literature are either prototype models still in a developmental phase, or they are still under construction. Busby's Directory [1], considered by many to be the "bible" for all non-military submersible vehicles throughout the world, provides a brief description of each vehicle for which published material is available. For AUVs, the list is limited. Table 4, extracted from data in Busby [1], provides some basic information on these AUVs.

Since the purpose of this study is to investigate a conceptual design for a long range AUV propulsion system, and not to design the vehicle itself, the review of the literature focussed on propulsion plant design considerations as opposed to vehicle design. From the point of view of vehicle design, however, some observations can be made based on the review which have direct application to this study.

Reproduced with permission of the copyright owner. Further reproduction prohibited without permission.

Table 4. Autonomous Underwater Vehicle Summary

VEHICLE	PURPOSE	DEVELOPER	ENERGY SYSTEM
ARCS	Mapping	ISE, Canada	Ni-Cd Battery
AUSS	Search/Ident	NOSC, San Diego	Ag-Zn Battery
AUV	Low Drag Study	DARPA	(Note 1)
B-1	Laminar Tests	NUSC, Newport	(Note 1)
CSTV	Control Tests	NCSC,Panama City	Ag-Zn Battery
EAVE E	Inspection	UNH,Durham	Lead-Acid Batt
EAVE W	Inspection	NOSC,San Diego	Lead-Acid Batt
ELIT	Inspection	IFREMER,France	Battery
EPAULARD	Topography	IFREMER,France	Lead-Acid Batt
LSV	Model Testing	NCSC,Panama City	(Note 1)
PINGUIN	Route Surveys	MBB, W.Germany	(Note 1)
PLA 2	Ore Collection	IFREMER, France	Battery
ROBOT II	Bottom Survey	MIT,Cambridge	Lead-Acid Batt
ROVER 1	Inspection	Heriott-Watt U.	Lead-Acid Batt
RUMIC	Mine C/M	NCSC,Panama City	(Note 1)
SKAT	Oceanography	USSR	(Note 1)
SPURV	Research	APL, Seattle	Ag-Zn Battery
TELEMINE	Mine Laying	Teksea, Switz.	Li Battery
TM 308	Inspection	Technomare, Italy	(Note 2)
UFSS	Laminar Tests	NRL, Washington	Lead-Acid Batt

NOTES:
1. Data not available.
2. Power provided by closed cycle heat engine

Reproduced with permission of the copyright owner. Further reproduction prohibited without permission.

These observations can be summarized as follows:

(1) AUVs have not yet been developed which have the capability to conduct a mission involving long ranges or long time durations (i.e., hundreds of miles or several days).

(2) AUV propulsion systems have relied almost entirely on secondary electrical storage batteries as an energy source.

(3) AUV control systems have been very limited in their capabilities, and are generally supplemented with some type of telemetry link to a human operator on the surface.

The observations stated above indicate that a reliable energy source and propulsion system would have to be developed to support long range AUV missions. To support the conceptual design of such a propulsion system, the literature review was concentrated in the following areas:

(1) Energy systems that can provide the total energy requirements of a mission as specified in the assumptions;

(2) Knowledge-based expert systems to manage the operation of the LRAUV propulsion system autonomously;

(3) Reliability considerations, particularly as they may be applied during a conceptual design in meeting reliability requirements specified in the assumptions.

In order to establish a proper power level context for the literature review and subsequent evaluation of candidate energy systems, some estimates of power and energy requirements were required prior to the review. An assumption of a power capability in the range of 50 kw to

Reproduced with permission of the copyright owner. Further reproduction prohibited without permission.

100 kw was made. As the mission requirements and vehicle requirements were established (see Assumptions), calculations were made to determine approximate power and energy requirements. These calculations, which were accomplished in computer programs POWER-1 and POWER-2 of Appendix E, are summarized in Appendix A, and resulted in a maximum design power requirement of 35 kw.

The results of the review in the three major areas of energy systems, expert systems and reliability are now presented.

Energy Systems

Basic Systems

The basic elements of a system designed to store and furnish energy for a particular application include a means of storing the energy in some form and the means for converting the stored energy into useful mechanical or electrical work. Other elements which could be included are energy transmission devices and control mechanisms. For this study we focus on energy storage and conversion.

The primary forms of energy storage used or considered for use in underwater vehicle power applications are chemical, thermal and nuclear. Chemical energy can be converted directly into electrical power through such devices as electrical storage batteries or fuel cells. It can also be converted into thermal energy, such as through the combustion of a fuel, and then to electrical or

Reproduced with permission of the copyright owner. Further reproduction prohibited without permission.

mechanical power via an energy converter or prime mover [2]. Thermal energy storage devices can be either latent or sensible. Latent sources generally involve a material phase change, while sensible heat sources operate by increasing the temperature of the storage medium during charge and show a decrease in temperature as energy is extracted. Nuclear sources provide energy either by the fissioning of a fuel in a nuclear reactor or through the decay of a radioisotope to a stable element.

Figure 1 provides a breakdown of energy systems which have been used, or considered for use, in underwater vehicles. These systems formed the basis for the literature review, the results of which are contained in Appendix A. The data obtained in this review was used to evaluate candidate systems, and is summarized in the tables of Appendix A.

Reproduced with permission of the copyright owner. Further reproduction prohibited without permission.

ENERGY SYSTEMS FOR UNDERWATER VEHICLES

DIRECT CONVERSION SYSTEMS

ELECTRICAL STORAGE BATTERIES

- Primary Batteries
- Secondary Batteries

FUEL CELLS

- Acid Fuel Cells
- Alkaline Fuel Cells

THERMAL CONVERSION SYSTEMS

INTERNAL COMBUSTION ENGINES

- Diesel Engines

EXTERNAL COMBUSTION ENGINES

- Steam Engines
- Gas Turbines
- Stirling Engines

HEAT SOURCES

- Chemical Sources
  - Hydrocarbon Fuel
  - Metallic Fuel
- Nuclear Sources
  - Nuclear Reactor
  - Radio-isotope Sources
- Thermal Storage Systems
  - Latent Heat Storage
  - Sensible Heat Storage

Figure 1. Underwater Vehicle Energy Systems

Reproduced with permission of the copyright owner. Further reproduction prohibited without permission.

Thruster Systems

General

For purposes of this study, the thruster system includes that part of the propulsion system which takes the power generated by the energy system and converts it to a thrust for propelling the vehicle. The thruster system can be considered to include all mechanical and electrical power transmission and conversion devices starting at the output of the power generating unit and continuing through the vehicle's propeller or other type of propulsor. We now review the two major parts of the thruster system --- the power transmission system and the propulsor system.

Power Transmission Systems

Systems used to transmit power from the generating unit to the propulsor unit on surface ships and submersibles have included the following types:

(1) Direct mechanical drive with reduction gears;

(2) Direct mechanical drive without reduction;

(3) Hydraulic pump and motor drive;

(4) Electric drive.

A brief discussion of these types of power transmission system follows.

Direct Mechanical Drive With Reduction Gears. This type of system is perhaps the most common system used on ocean-going surface ships and is extensively used on nuclear-powered submarines in conjunction with a Rankine cycle steam power plant. The reduction gears are used to

Reproduced with permission of the copyright owner. Further reproduction prohibited without permission.

accommodate the high speed of a prime mover (e.g., steam turbine) and the relatively low speed required for optimum efficiency of a propeller. Reduction gears generally contribute significantly to overall propulsion plant weight and noise levels. Power transmission losses in reduction gears are on the order of 2% to 4% [32]. This system may also include other line shaft components such as thrust bearings, shaft journal bearings, lubricating systems for reduction gears and bearings, clutch and a shaft seal device for the shaft hull penetration. For a submersible, the shaft seal is of particular concern with respect to maintenance and reliability. In this writer's personal experience in operating and maintaining systems of this type, the shaft seal represents one of the highest maintenance demands in the entire propulsion system. The widespread use of this type of mechanical drive appears to be based on its ability to transmit very high levels of power with reasonable efficiency.

Direct Mechanical Drive Without Reduction. This type of system is rarely used, since it requires a match in the speed of the prime mover with that of the propulsor. Applications have generally been restricted to systems with large reciprocating engines (e.g., large Diesel engines) which can operate efficiently at the low speeds required for the propulsor. It does not appear to have much potential for a relatively small submersible vehicle.

Reproduced with permission of the copyright owner. Further reproduction prohibited without permission.

Hydraulic Drive. This type of system generally involves the conversion of mechanical energy from a prime mover to electrical energy, or the use of an electrical storage battery, to power an electric motor which drives a hydraulic pump. The hydraulic pump, in turn, transmits hydraulic pressure to a hydraulic motor, which is used to drive the propulsor shaft. This system is often found in designs where hydraulic power is used for other purposes, or where an electric motor cannot provide adequate thrust. Energy conversions and transmission losses tend to have a significant adverse impact on overall system efficiency.

One example of a hydraulic system in a deep-diving submersible was in the original propulsion system of the research vehicle ALVIN [33]. This vehicle was built in 1964 and is operated by the Woods Hole Oceanographic Institution. The original propulsion system used a lead-acid storage battery and a hydraulic propulsion and steering system for powering a large, steerable, shrouded stern propeller and two trainable, shrouded lift propellers. Hydraulic power was supplied by a pair of 6 HP, brush commutated, DC electric motors driving variable displacement hydraulic pumps. The system was located external to the main pressure hull and the hydraulic plant and electric motors were pressure compensated in oil to reduce weight. Overall propulsive efficiency for this system was only 7.5%.

The hydraulic drive system was used on ALVIN virtually unchanged for over 20 years. During a major overhaul in

Reproduced with permission of the copyright owner. Further reproduction prohibited without permission.

1986, this system was replaced with an all-electric propulsion system. This decision was based on the extensive maintenance problems associated with the original system, as well as its low efficiency and limited maneuverability. In addition to hydraulic leaks, maintenance problems were generated by the severe carbon build-up and subsequent wear of electric motor brushes and commutators operating in oil at high pressures. The new system uses an electronic controller to invert the DC power from the battery to three-phase AC and to provide speed regulation and commutation control. Six shrouded propellers are used, each driven by a 3 HP brushless motor externally mounted in oil-filled pressure compensated housings. Overall propulsion efficiency of this system is 16.4%, more than double that of the original system. Based on a full year's operation and 65 dives with no system failures, the operators feel that the new system has significantly improved the ALVIN's reliability [34].

Electric Drive. The majority of small submersible vehicles operating today use all-electric propulsion systems with externally mounted pressure-compensated electric propulsion motors. Electrical transmission provides more flexibility in arrangements and, as demonstrated by the ALVIN conversion experience, can provide substantial efficiency improvements over other systems. With externally mounted motors, it eliminates the problems associated with sealing a rotating shaft penetrating the pressure hull. The electrical drive system with large internal DC propulsion

Reproduced with permission of the copyright owner. Further reproduction prohibited without permission.

motors was the standard propulsion system used for decades on U.S. Navy diesel-electric submarines. Based on the advantages of higher efficiency and lower noise levels, a turbo-electric drive system has been used on a limited number of nuclear-powered submarines. In these systems, a Rankine cycle steam plant with turbo-generators provides electrical power to large, internal propulsion motors. Limitations on motor sizes and torques and internal arrangement considerations have limited the power capability of these systems in comparison to the direct mechanical drive with reduction gears.

Propulsor Systems

General. While other devices have been adopted for certain particular types of ships and kinds of service, the screw propeller, in use since 1804, still has no real rival in the field of ship propulsion [32]. Screw propellers are used in a variety of configurations, including their use as thrust producing elements in jet pumps. The basic concept of a screw propeller involves an acceleration of water entering it, producing a change in water momentum, or thrust. The thrust produced can be expressed by [32]:

$$T = \rho A_j V_j (V_j - V) \qquad \text{(Eqn. 1)}$$

where: T = thrust force (lb)

ρ = mass density of water (lb-sec^2/ft^4)

A_j = area of water jet well beyond propeller (ft^2)

V_j = velocity of water jet at area A_j relative to the propeller (ft/sec)

V = vehicle velocity (ft/sec)

Reproduced with permission of the copyright owner. Further reproduction prohibited without permission.

In expressing the efficiency of the propeller the term "quasi-propulsive coefficient" is commonly used [32], which combines hull efficiency and propeller efficiency behind the hull, or:

$$\eta_D = \frac{\text{Effective Horsepower}}{\text{Delivered Horsepower}} = \eta_H \eta_B \qquad \text{(Eqn.2)}$$

where:

η_D = quasi-propulsive coefficient

η_H = hull efficiency = $(1-t) / (1-w)$ (Eqn. 3)

η_B = propeller efficiency behind the hull
= $(T\ V_A) / (2\ \pi\ n\ Q)$ (Eqn. 4)

$(1-t)$ = thrust deduction factor = R_T / T (Eqn. 5)
= reduction in thrust due to the action of the propeller in reducing the pressure of the water at the stern of the vessel and thus reducing forward thrust

$(1-w)$ = wake factor = V_A / V (Eqn. 6)

V_A = speed of advance, or forward moving velocity of water astern of hull and forward of propeller caused by the forward motion of the hull (ft/sec)

V = vehicle velocity (ft/sec)

R_T = hull resistance when towed (lb)

T = thrust of propeller (lb)

n = shaft angular velocity (rev/sec)

Q = shaft torque delivered (ft-lb)

Increasing propeller efficiency, then, relates to increasing thrust for a given shaft torque, or increasing the relative outlet velocity. An increase in thrust can be accomplished by increasing the propeller area or diameter, or increasing the relative outlet velocity. Other techniques for improving propeller efficiency include the use of ducts or

Reproduced with permission of the copyright owner. Further reproduction prohibited without permission.

shrouds around the circumference of the propeller to provide a greater pressure differential and to inhibit tip vortices and the resultant loss of blade lift force. Duct or shroud resistance can partially offset improvements in efficiency. Some of the more common propeller designs and configurations are now reviewed.

Open Propeller. This design is the most common for surface ships and has the advantages of simplicity and ease of increasing the diameter for thrust improvement. At lower speeds it is generally less efficient than a shrouded configuration. The absence of a duct or shroud makes the open propeller more susceptible to fouling and damage.

Ducted Propeller. In this design the propeller is located inside a tunnel or duct which is open to the water at both ends. The efficiency at lower speeds is higher than that of the open propeller. The use of close clearances between the propeller and the duct helps to inhibit propeller blade tip vortices which affect blade lift. At higher speeds ducting resistance reduces efficiency. The duct has an added advantage of protecting the propeller during operation.

Shrouded Propeller. In this design a foil-shaped ring or shroud is installed circumferentially around the propeller, which improves efficiency over the open propeller similar to the ducted propeller. The shroud arrangement is generally more conducive to the use of larger diameter propellers than the ducted type, and can generally be used at

Reproduced with permission of the copyright owner. Further reproduction prohibited without permission.

higher vehicle speeds.

Controllable Pitch Propeller. In this design the pitch of each blade can be changed during operation to provide the optimum pitch for the existing vehicle speed. This design would be highly advantageous for a single propeller design with a wide range of operating speeds. The added complexity tends to detract from reliability.

Contrarotating Propellers. This design includes two tandem propellers mounted on concentric shafts and rotating in opposite directions. This arrangement eliminates the reaction torque of a single propeller and increases efficiency by regaining some of the rotational energy from the forward propeller in the after propeller. Model tests on surface ships indicate that this configuration requires about 7% less power than a comparable twin-screw or single-screw configuration for the same thrust [32]. An added benefit is the improvement in vibrational characteristics. However, the complexity of the shafting, gearing and shaft seals makes this arrangement less attractive with respect to maintenance and reliability. This writer's personal experience with the U.S. Navy's only nuclear-powered submarine with contrarotating propellers confirms the low reliability and particularly difficult maintenance and repair features of this design.

Water Jet / Pump Jet. This design is similar to a ducted propeller, but generally involves a duct whose diameter increases from the entrance to the pump impeller,

Reproduced with permission of the copyright owner. Further reproduction prohibited without permission.

resulting in a velocity decrease / pressure increase in that section. The pressure increase inhibits the incidence of cavitation as compared to an open propeller of the same diameter. Efficiency improvements with this design are dependent on the actual configuration.

Vertical Axis Propeller. The Voith-Schneider design is the most common application of this design, in which each blade makes a complete revolution about its own axis for each revolution of the whole propeller. This design provides excellent maneuvering characteristics at the expense of reduced efficiency, added weight and complexity. A comparison with open propellers indicates a reduction in efficiency in the range of 30% to 40% [32]. This design has not been applied to submersible vehicles, but has been restricted to those surface vessels where accurate positioning and high maneuverability are of highest priority. The surface support ship for ALVIN, the ATLANTIS II, uses this design for its bow thruster.

Reproduced with permission of the copyright owner. Further reproduction prohibited without permission.

Knowledge Based Systems

General

Knowledge based systems, or "expert systems", using artificial intelligence (AI) have been developed over the past two decades to solve problems in many areas. An expert system is generally defined to mean a computer program that solves problems normally requiring the knowledge and skill of human expertise [35,36]. Expert systems have been successfully applied to a wide variety of domains to perform several distinct generic functions. Table 5 provides a listing of some of the major categories of expert system applications.

Knowledge Representation

The power of an expert system is derived from the knowledge it possesses. Knowledge engineering addresses the problem of building skilled computer systems, aiming first at extracting the experts' knowledge and then organizing it in an effective implementation [36]. Knowledge representation is one of the most difficult aspects of building an expert system. Several techniques have been developed by AI researchers for representing the knowledge of an expert in a manner that can be used by the computer and which enhances the reasoning process. A summary of the more commonly used techniques is presented in Table 6, as extracted from Siemens, et. al. [37].

Reproduced with permission of the copyright owner. Further reproduction prohibited without permission.

Table 5. Generic Categories of Expert System Applications

CATEGORY	APPLICATION
• Interpretation	Inferring situation descriptions from sensor data
• Prediction	Inferring likely consequences of given situations
• Diagnosis	Inferring system malfunctions from observables
• Design	Configuring objects under constraints
• Planning	Designing actions
• Monitoring	Comparing observations to expected outcomes
• Debugging	Prescribing remedies for malfunctions
• Repair	Executing plans to administer prescribed remedies
• Instruction	Diagnosing, debugging, and repairing student behavior
• Control	Governing overall system behavior

Reproduced with permission of the copyright owner. Further reproduction prohibited without permission.

Table 6. Summary Analysis of Knowledge Representation Techniques

TECHNIQUE	STRENGTHS	WEAKNESSES
• Rules	• Flexible • Stand alone • Represent poorly understood info • Available tools for development	• Lack of structure • No methodology of development • Semantics difficult • Difficult to manage • Difficult to maintain • Hinder generic development • Difficult to represent control or temporal knowledge
• Object Oriented	• Flexible • Data and behavior packed together • Maintainable • Available tools for development	• No underlying principles or constraints • Lack of development methodology • No associated problem solving techniques
• Semantic Network	• Wide variety of relationships represented • Some methodology • Natural representation	• Ambiguous definition of relationships • Lack of defined problem solving methods
• Black Board	• Multiple levels • Ability to define interaction between levels • Independent knowledge sources contribute	• Complexity of definition • Lack of explicit control methodology

Reproduced with permission of the copyright owner. Further reproduction prohibited without permission.

Many expert systems have been developed using the knowledge representation techniques of Table 6. These systems, however, have generally not dealt with one of the major factors that must be considered in building a system for use with an AUV -- the representation of time-related data. In fact, Waterman states that current expert systems are not very good at representing temporal knowledge [35]. Allen [37] provides some insight into the problem. Some other limitations of expert systems developed to date include the following:

(1) Handling inconsistent knowledge;

(2) Performing knowledge acquisition;

(3) Refining knowledge bases;

(4) Handling mixed representational schemes.

These limitations and others must be addressed in designing a system for an AUV application.

In reviewing systems designed to handle monitoring and diagnostic functions, the most common techniques used for knowledge representation appear to be a combination of production rules (usually, IF-THEN type statements) and some type of object-oriented structure (e.g., frames or property lists). The object-oriented or frame structure seems to be particularly well suited for an engineering system which can be broken down into a hierarchy of sub-systems and components whose properties can be described. Frames can also be used to store time-related data, which is explored further in this study.

Reproduced with permission of the copyright owner. Further reproduction prohibited without permission.

Diagnostic Expert Systems

In the management of an AUV propulsion system, the primary functions envisioned include monitoring, diagnosis, interpretation, prediction and control. Since the diagnostic function is a key element of reliable AUV operation, a separate literature review was conducted of those expert systems which concentrate on diagnosis. A list of those systems investigated is provided in Table 7. (See references [38] through [62]). While these systems are referred to as diagnostic expert systems, all include some degree of interpretation and monitoring while a limited number also provide a prediction capability.

Early diagnostic expert systems concentrated almost entirely on the medical domain and were later modified to permit application to other domains. Later systems designed for use in various engineering systems used many of the concepts and techniques initially developed for the medical systems. Figure 2 provides a taxonomy of the diagnostic expert systems reviewed.

Diagnostic expert systems typically relate observed irregularities with underlying causes, using one of two techniques [36]. One method essentially uses a table of associations between behaviors and diagnoses, and are generally classified as heuristic-based. The other method combines a knowledge of system design with a knowledge of potential flaws in design to generate candidate malfunctions

Reproduced with permission of the copyright owner. Further reproduction prohibited without permission.

Table 7. Applications of Diagnostic Expert Systems

SYSTEM	APPLICATION
MYCIN	Medical (Blood Diseases)
EMYCIN	Medical (System Building)
PUFF	Medical (Pulmonary Diseases)
TEIRESIAS	Medical (System Building)
PROSPECTOR	Mineral Exploration
KAS	Knowledge Acquisition (PROSPECTOR)
CASNET	Opthomology (Glaucoma)
EXPERT	Medical (System Building)
INTERNIST	Medical (Internal Medicine)
CADUCEUS	Medical (Internal Medicine)
PIP	Medical (Kidney Diseases)
MDX	Medical (Liver Diseases)
SOPHIE	Electronics Instruction
AUTO-MECH	Auto Mechanics
IDT	Computer Fault Diagnosis
DELTA	Diesel Electric Locomotive Maintenance
ACE	Telephone Cable Maintenance
REACTOR	Nuclear Reactor Operator Assistance
CSA	Nuclear Reactor Problem Diagnosis
MDIS	Aircraft Systems Logistic Support
LES	Electronics Troubleshooting
DART	Computer Hardware Fault Diagnosis
STARPLAN	Satellite Monitoring and Diagnosis
ACES	Satellite Attitude Control Diagnosis
VM	Medical (Ventilation Manager)

Reproduced with permission of the copyright owner. Further reproduction prohibited without permission.

Figure 2. Taxonomy of Diagnostic Expert Systems

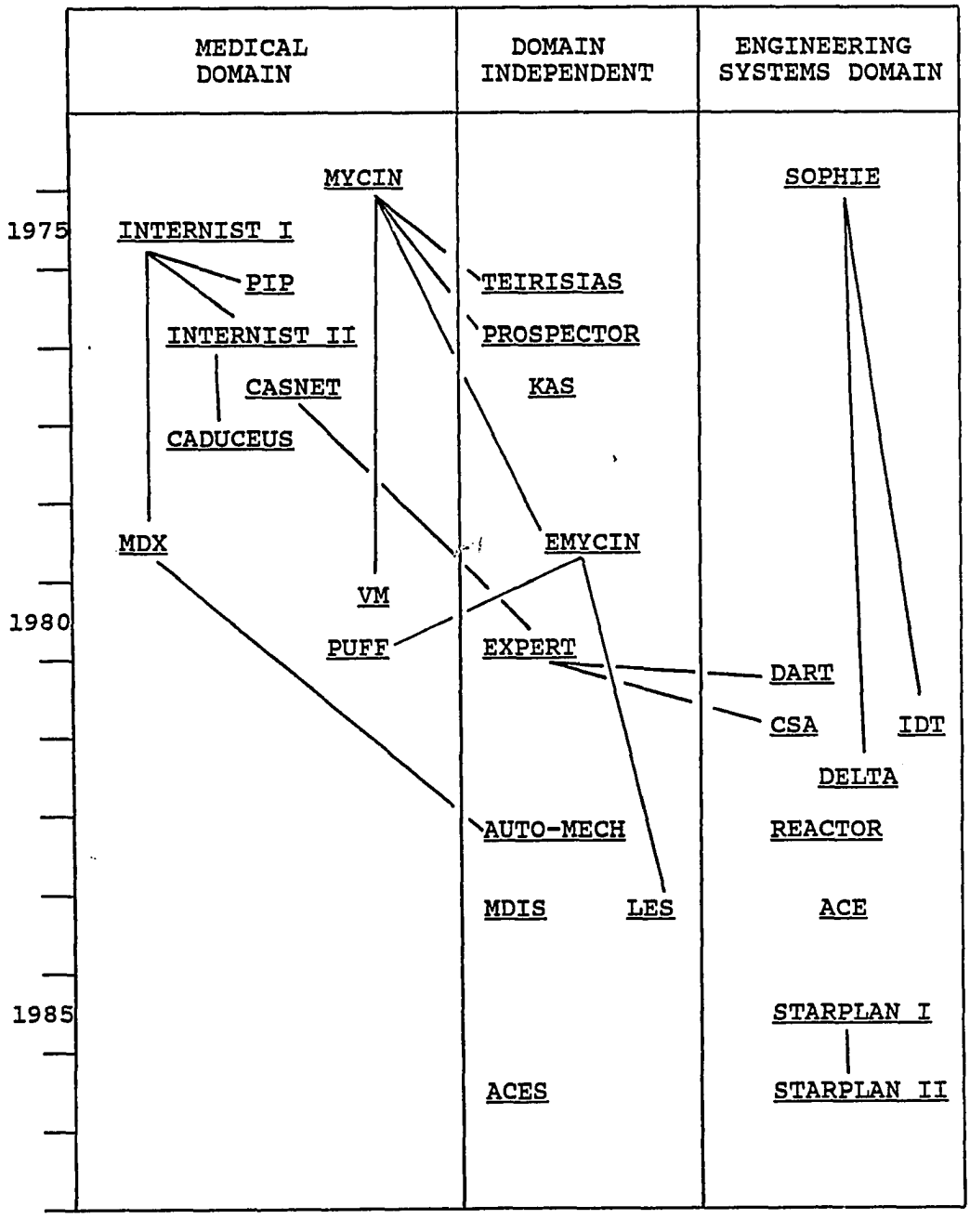

Reproduced with permission of the copyright owner. Further reproduction prohibited without permission.

consistent with observations. Systems using the latter method are often described as model-based systems. Models are also used in prediction systems, where consequences are inferred from a parametric dynamic model with parameter values fitted to a given situation. The diagnostic expert systems reviewed are classified in Table 8, while Table 9 provides information on the knowledge representation concepts used by each of these systems.

Most of the expert systems reviewed appear to be lacking in two areas considered essential for AUV use:

(1) The ability to function without human interaction.

(2) The ability to function on a real-time basis.

Table 10 provides a listing of expert systems which, while not capable of real-time interaction, have been designed to deal with time-related data on a near real-time basis.

A recent system under development by the Navy provides real-time fault detection and diagnosis to assist operators of shipboard gas turbine propulsion plants [63]. Knowledge of the time at which propulsion system alarms are triggered, along with knowledge of the order of the alarms, is used in a statistical manner to diagnose the cause of the alarms. While this program has only been applied to one propulsion system on a computer simulation, it appears to offer some potential for AUV application.

Reproduced with permission of the copyright owner. Further reproduction prohibited without permission.

Table 8. Classification of Diagnostic Expert Systems

DOMAIN	HEURISTIC-BASED SYSTEMS		MODEL-BASED SYSTEMS	
	1974-1980	1981-1986	1974-1980	1981-1986
Medical Domain	MYCIN PUFF INTERNIST PIP CASNET MDX VM		VM	
Engineering Domain		REACTOR ACE DELTA STARPLAN	SOPHIE	IDT DART CSA STARPLAN
Domain Independent	EXPERT TEIRESIAS EMYCIN KAS	MDIS LES AUTO-MECH ACES		ACES

Reproduced with permission of the copyright owner. Further reproduction prohibited without permission.

Table 9. Knowledge Representation Concepts Used in Diagnostic Expert Systems

	PRODUCTION RULES	OBJECT-ORIENTED OR FRAMES	SEMANTIC NETWORKS
			SOPHIE
1975			INTERNIST
	MYCIN	PIP	PIP
	TEIRESIAS		CASNET
	PROSPECTOR KAS		PROSPECTOR KAS
	EXPERT EMYCIN		EXPERT MDX
	PUFF		
1980	VM		
	CSA REACTOR DELTA		CSA REACTOR
	ACE IDT DART		AUTO-MECH
	LES	LES	MDIS
1985	STARPLAN	STARPLAN	STARPLAN
	ACES		

Reproduced with permission of the copyright owner. Further reproduction prohibited without permission.

Table 10. Near Real-Time Applications of Monitoring and Diagnostic Expert Systems

SYSTEM	KNOWLEDGE REPRESENTATION TECHNIQUES
STARPLAN I	• Object-Oriented (KEE) • Semantic Networks • Production Rules
STARPLAN II	• Proprietary (PARAGON)
ACES	• Production Rules • Model
CSA	• Networks -- states, processes • Diagnostic Rules
REACTOR	• Response Trees • Networks • Production Rules
VM	• Production Rules • Property Lists

Reproduced with permission of the copyright owner. Further reproduction prohibited without permission.

VM System

Of all the expert systems reviewed in the literature, the one system which uses more of the concepts considered applicable for AUV use is the Ventilator Manager (VM) system developed at Stanford University [58,59]. VM monitors postoperative medical patients in an intensive care unit who are using a mechanical breathing device. VM uses both heuristics and a model, and provides a time-based interpretation of monitored data based on the degree of mechanical breathing assistance provided (i.e., patient context). Various patient physiological conditions are monitored on a real-time basis and periodically summarized. In addition, diagnostic conclusions are developed by VM and provided to the attending physician as suggestions.

Among the concepts used by VM in accomplishing its functions which have potential for AUV use are the following:

(1) Real-time data collection;

(2) Representation of the dynamic nature of diagnosis;

(3) Symbolic model of known states for diagnosis;

(4) Measurement ranges to accommodate uncertainty;

(5) Data valid only for specified time periods;

(6) Rules based on a context which changes with time;

(7) Knowledge represented by property lists with static and dynamic elements;

(8) Rate of monitoring adjusted based on situation;

(9) Data storage requirements reduced by use of periodic summaries.

Reproduced with permission of the copyright owner. Further reproduction prohibited without permission.

The VM system does, however, have some limitations which limit its ability to be adapted. These limitations include:

(1) Inability to re-evaluate old conclusions. This limitation hinders the efficient resolution of conflicts between expectations and actual events.

(2) User interaction is required for implementing the results of diagnosis (VM suggestions to physician).

(3) User verification of specific data may be required in order to complete a diagnosis.

(4) Inability to model complicated planning actions.

(5) Inability to represent some of the linguistic terms normally associated with time-based concepts.

Despite these limitations, the VM system should prove to be useful in developing a real-time system for managing the propulsion system of an AUV. In a paper delivered at a recent symposium on AUV technology, this writer outlined some of the methods by which the time-related concepts of VM could be adapted for use in an AUV propulsion system [64]. The concepts presented appear to be consistent with the knowledge-based architecture developed by researchers at the University of New Hampshire for use in the EAVE autonomous underwater vehicle [65].

To assist the developer of an expert system, a wide variety of expert system building systems are available. While some of these systems, such as EMYCIN and TEIRESIAS, have been available since the mid-1970's, it has only been in the past few years that the major software companies have

Reproduced with permission of the copyright owner. Further reproduction prohibited without permission.

developed products in this area. Davis [66] gives a good overview of recent applications of AI and AI tools currently available. Table 11 lists some of the major expert system building software systems currently available [67-71]. Of those listed, only PICON [67] and G2 appear to concentrate on real-time applications. The use of PICON was explored in the development of an expert system to manage the operation of the conceptual AUV propulsion system. However, the system is no longer supported by its developer, so the PPM expert system was developed entirely by this researcher using Common Lisp code and without the use of any development system.

Reproduced with permission of the copyright owner. Further reproduction prohibited without permission.

Table 11. Summary of Expert System Building Systems

SYSTEM	DEVELOPER	KNOWLEDGE REPRESENTATION
ART Automatic Reasoning Tool	Inference Corp.	• Schema-based to reason about objects • Procedural knowledge in various types of rules
KEE Knowledge Engineering Environment	Intellicorp	• Frame-based hybrid system • Object-oriented programs • Production rules
PICON Process Intelligent CONtrol	LMI	• Frames represents objects • Icons - graphic symbols having attributes • Rules for heuristics • REAL-TIME interface
G2	Gensym	• Frames with attributes, rules and time data • Icon-based graphics • REAL-TIME multiple system
GEST Generic Expert System Tool	Georgia Inst. of Technology	• FRED - uses facts, rules, and frames with conflict resolution strategies and fuzzy logic capability
AGE Attempt to GEneralize	Stanford University	• Multiple systems - user selects rules, frames, blackboard, or object oriented techniques

Reproduced with permission of the copyright owner. Further reproduction prohibited without permission.

Reliability

General

A key factor in the successful deployment of a long range autonomous underwater vehicle (LRAUV) is the need to provide a high degree of reliability into the design of the vehicle, including its major components and systems. This high degree of reliability is necessary to provide reasonable assurance that the vehicle will successfully accomplish its assigned mission and return safely to its home base without human intervention. If conditions develop during the vehicle's deployment which preclude accomplishment of the entire mission as planned, the vehicle must be capable of adapting to the conditions in a reliable manner, modifying its mission as necessary, in order to maximize the accomplishments that can be realized on a particular mission.

Reliability considerations must be a factor throughout the vehicle design. The selection of components and systems with demonstrated low failure rates, while important, is only a small part of the reliability design effort. During the development of the preliminary design, overall system reliability must be analyzed. The most widely applied techniques available for reliability analysis include:

(1) Reliability block diagram and mathematical analysis;

(2) Monte Carlo simulation;

(3) Failure Modes Effects and Criticality Analysis;

(4) Fault tree analysis.

Reproduced with permission of the copyright owner. Further reproduction prohibited without permission.

Other methods, such as Markov modeling and the Method of Bounds, are also used by analysts but are based on the assumption of a constant failure rate, which reduce their usefulness in mechanical systems analyses [73].

The reliability analysis techniques considered by many to be most appropriate for use in the design phase are the failure modes effects analysis (FMEA) and criticality analysis (CA), which are generally combined into one process referred to as FMECA. This is a systematic design evaluation procedure used to identify potential failure modes and to assess their effects throughout the system, as well as to define failure mode criticality to provide insight into potential reliability problems [73]. FMECA uses inductive logic in a "bottom up" approach, as opposed to the "top down" approach of a fault tree analysis. It requires an initial understanding of each component in the design and how it interfaces with the other components. Failure rates for each component must be obtained or assumed. To support this type of analysis, failure rate data for many mechanical and electrical components has been assembled by the Reliability Analysis Center [74] and is commonly used in industry. While many standard statistical distributions can be used to model the various reliability parameters, the Exponential Distribution and Weibull Distribution are the most widely used. FMECA work done in industry today appears to be based primarily on military standards [75] and techniques.

Reproduced with permission of the copyright owner. Further reproduction prohibited without permission.

Design Considerations

Once failure rates have been identified for all major propulsion plant components and failure modes effects analyzed for the preliminary design, modifications and refinements to the conceptual design can then be identified and implemented to enhance reliability. Many of the standard design techniques used in the design of manned submersible propulsion plants can be used to improve the reliability of unmanned submersible systems. These techniques include such items as: use of redundant components, providing alternate functional capability for selected systems or components, providing backup or "emergency use only" systems, etc. Space and weight constraints, always a factor in the design of any submersible vehicle, are especially limiting in the design of a small AUV. This limitation is expected to constrain the degree of redundancy or backup capability that can be incorporated into the design of the AUV propulsion plant.

Another major limiting factor in designing for reliability in unmanned vehicles, as compared to manned vehicles, is the obvious one of no human interface during vehicle deployment. Manned submersibles rely heavily on the troubleshooting and maintenance capability of a trained crew to support long term deployments. These capabilities include extensive preventive maintenance efforts on systems/components, constant watchstander monitoring of operating equipment, periodic logging of equipment operating

Reproduced with permission of the copyright owner. Further reproduction prohibited without permission.

parameters, trend analysis and projection for operating parameters, planned systematic rotation of operating and standby components, and the incorporation of modular replacement capabilities supported by an extensive spare parts inventory. In addition, operators are provided extensive training in fault diagnosis and in applying immediate corrective action to minimize the impact of faults on mission objectives.

With the exception of preventive and corrective maintenance actions, most of the above functions accomplished by trained operators on a manned submersible can be accomplished to some extent on an unmanned submersible in support of reliability considerations. Operating parameters for propulsion plant subsystems/components on an unmanned submersible can be readily measured and recorded using available technology. Expert systems using artificial intelligence techniques can be developed for the diagnosis of data and data trend projection and analysis, as well as the identification and initiation of appropriate corrective action in the event of malfunctions or projected malfunctions. These expert systems have proven themselves capable of "reasoning" about conditions, even with only partial data, and providing accurate diagnoses.

Fault Management Techniques

Autonomous operation over long time durations requires the incorporation of a reliable and effective fault management system within the design of vehicle hardware and

Reproduced with permission of the copyright owner. Further reproduction prohibited without permission.

software systems. The basic objectives of such a system would include the detection of both hardware and software failures, or predicted failures, and implementation of appropriate corrective action which would permit achieving mission goals.

A fault management system developed by researchers at Westinghouse [76] provides for a dynamic management and diagnostic capability using multiple layers of fault protection. The use of redundant hardware provides the computing base for checking sensor, actuator and software module performance. Expert system rules are used to check platform progress in meeting scheduled goals and monitor occurrences of events against expectations. Task rescheduling capabilities are provided, along with an ability to reassign software/hardware networks. The proposed hardware architecture uses two or more VMEbus computer systems interconnected through Ethernet. With two computer systems, a base reliability of 0.999 is projected for missions of 100 to 200 hours duration.

A similar redundant approach to fault management of AUV control systems has been taken by researchers at Texas A&M University [77], in which a distributed environment is used with functional decomposition of cooperating knowledge bases interconnected in a multi-bus, redundant architecture. Eleven local generic nodes, each providing primary control functions, are combined with two global nodes. The global nodes provide complete duplicate copies of all other control

Reproduced with permission of the copyright owner. Further reproduction prohibited without permission.

functions so as to automatically provide for backup and remote status. Reliability is enhanced by local fault tolerant monitors at each generic node and dual global fault tolerant monitors for overall system reliability. Conflict resolution of control functions in the rule-based environment is achieved independently at each node and duplicated globally. The generic design of the system architecture is intended to make the AUV design independent of any specific hardware.

It should be noted that, in both systems outlined above, the limitations of AUV design, especially as they pertain to space and weight considerations, were not completely addressed with respect to the extensive redundancy inherent with these approaches.

It is considered that the overall importance of reliability in the design of AUVs and AUV propulsion systems cannot be overstated. AUVs must be designed and constructed with the highest achievable level of reliability if these vehicles are to be considered viable and practical alternatives to existing ROVs and manned vehicles. Reliability is the single most important attribute to be considered if AUVs are to be successful in future underwater applications. A lack of reliability in AUVs, especially with respect to the energy and propulsion systems, can have perhaps the most significant adverse impact on the future of AUVs than any other factor.

Reproduced with permission of the copyright owner. Further reproduction prohibited without permission.

The factor of reliability was identified as the most significant factor in the conceptual design, due to the unmanned and autonomous nature of the AUV. The literature review indicated that the techniques most commonly applied during the design phase of a system to evaluate reliability include a Failure Modes Effects and Criticality Analysis (FMECA). A source of reliability data for generic components was identified during the review. The use of the FMECA is seen to provide a tool for not only the early evaluation of reliability in the conceptual design, but also to assist in the development of a computer model of the propulsion system, which will be used to demonstrate the operation of the knowledge-based system in managing the operation of the propulsion system. The description of failure modes and the symptoms associated with these failures can be coded into the expert system to be used for diagnosing propulsion system failures.

Reproduced with permission of the copyright owner. Further reproduction prohibited without permission.

III. DESIGN PROCEDURES

Introduction

Systems Engineering and the Design Process

> Design is the essential purpose of engineering. It begins with the recognition of a need and the conception of an idea to meet this need. It proceeds with the definition of the problem, continues through a program of directed research and development, and leads to the construction and evaluation of a prototype. It concludes with the effective multiplication and distribution of a product or system, so that the original need may be met wherever it exists. [78]
>
> - J.B. Reswick, Editor
> Prentice-Hall

The design of complex systems today centers about the techniques and processes that are often referred to as systems engineering. In the broadest sense, systems engineering is concerned with the synthesis and analysis of the performance of physical systems which are optimized with respect to some criteria. Systems engineering, which has been developed over the last three decades, is considered one of the most important recent achievements in engineering, not only as a technique for engineering design and creative effort, but also as a discipline with the potential of many applications in other fields [79].

The engineering design process can take many forms and can be broken down into various phases. Table 12 contains a description of the various phases of the engineering design process which appears to be most commonly used [80].

Reproduced with permission of the copyright owner. Further reproduction prohibited without permission.

Table 12. Phases of Engineering Design

PHASE	FUNCTION	DESCRIPTION
1	Recognize	Establish a problem area.
2	Define	Determine exactly the nature of the problem.
3	Prepare	Collect pertinent information.
4	Analyze	Break down and study the information.
5	Synthesize	Assemble analyzed information into various configurations.
6	Evaluate	Study the merits of each possible solution and select.
7	Present	Sell the chosen solution.

Reproduced with permission of the copyright owner. Further reproduction prohibited without permission.

Another breakdown of the design process, which is commonly used in ship design among other applications, includes the following major parts [78] :

Part I. Feasibility study (sometimes referred to as the conceptual design phase). This study results in a set of useful solutions to a design problem. It usually involves the following generic functions: an investigation of the need for a design; the definition of the elements of the problem as well as constraints and major design criteria; the development of alternative plausible solutions and the sorting out of these solutions. The functions normally associated with this phase could be considered to include Phases 1 through 5 of the engineering design process as outlined in Table 12.

Part II. Preliminary Design. This part starts with the set of useful solutions developed during the previous feasiblity study and selects the best solution based on an analysis using established selection criteria. This part is comparable to Phase 6 and possibly Phase 7 of Table 12.

Part III. Detailed Design. This part begins with the concept selected during the previous preliminary design phase and involves the development of an engineering description (e.g., detailed drawings, specifications, etc.) of a tested and producible design.

This study involves, to some extent, each of the seven functional phases of Table 12, which can be considered to constitute a feasibility study and the initial stages of

Reproduced with permission of the copyright owner. Further reproduction prohibited without permission.

a preliminary design. Phases 1 and 2, the recognition and definition phases, are essentially contained in Section I of this study, while Phase 3, the collection of pertinent data, is contained in Section II and the Appendix. The next three phases of analysis, synthesis and evaluation are contained in the subsequent parts of this section. Phase 7, the presentation of the selected solution, will consist of a demonstration of the simulated system operation.

Systems Design Criteria

Propulsion System Design Criteria

General. Based on the mission requirements, vehicle characteristics and propulsion system characteristics outlined in Section I under Assumptions, design criteria for the propulsion system can be developed to support the selection of feasible design alternatives. The design criteria can then be categorized as mandatory or desirable, and the desirable criteria prioritized and used as a basis for evaluating candidate systems and selecting a system which bests meets the criteria. The mandatory criteria are used to eliminate systems from consideration which do not meet this criteria.

Power and Energy Requirements. From the assumed vehicle characteristics and mission profile, power and energy requirements for the propulsion system can be calculated. The applicable calculations are contained in Appendix A, and result in the following requirements:

Reproduced with permission of the copyright owner. Further reproduction prohibited without permission.

(1) Propulsion Shaft Horsepower: 15.6 hp\11.6 kw maximum.

(2) Auxiliary Power: 1.0 kw maximum

(3) Total Energy Delivered/Mission: 966.6 kw-hr

(Includes propulsion and auxiliary loads.)

Mandatory Operational Requirements. These are based on the mandatory characteristics outlined in Section I and include:

(1) Power and energy capacities as specified above;

(2) Operation independent of the atmosphere;

(3) Operation independent of vehicle depth;

(4) System adaptable to automation.

System Evaluation Factors. For propulsion systems which meet the mandatory requirements specified above, an evaluation is conducted using the following factors which are based on the desirable characteristics specified previously in Section I:

(1) Reliability. Highest operational reliability.

(2) Weight. Lowest weight relative to power and energy.

(3) Depth Independence. Relative ease and efficiency in achieving depth independent operation.

(4) Endurance. Greatest relative endurance for comparable weight of plant.

(5) Efficiency. Highest overall efficiency in conversion of stored energy to propulsion power.

(6) Quietness. Lowest noise levels generated by propulsion system in all modes of operation.

Reproduced with permission of the copyright owner. Further reproduction prohibited without permission.

Knowledge-Based System Design Criteria

The knowledge-based expert system must be capable of accomplishing the following functional requirements:

(1) Monitor and record propulsion plant parameters at rates of 1 to 10 seconds, as determined by plant status;

(2) Establish a validity time interval for data, based on plant status;

(3) Evaluate monitored data to identify and verify the existence of abnormal conditions or trends that may lead to abnormal conditions;

(4) Identify the appropriate level of corrective action required to resolve abnormal conditions;

(5) Generate control signals to modify the propulsion plant lineup or mode to meet mission requirements and to resolve abnormal conditions or trends;

(6) Maintain a data base with current data, abnormal trends and a history of plant status changes and abnormal operating parameters.

Design Analyses

Energy System Analysis

General. The selection of an appropriate energy system is considered the most significant task in the propulsion system conceptual design process and one which probably has the greatest impact on the characteristics of the propulsion system. In addition, this may also be the most difficult task due to the number and complexity of available systems

Reproduced with permission of the copyright owner. Further reproduction prohibited without permission.

and subsystems. Accordingly, this selection process is given the most attention and emphasis in the design analysis. The key to this analysis is the evaluation of how well the various candidate systems meet the specified characteristics and design criteria.

Analysis Techniques. Information and technical data on various energy systems and sub-systems has been obtained through a comprehensive review of available literature and is contained in Section II and the Appendix. Specific data is sorted out for the specified evaluation criteria for each of the candidate systems to the extent available. Where possible, data for systems with a design power level of approximately 30-50 kw is used in the analysis. Where specific data is not available, relative indicators and estimates are used based on available information.

The data for each candidate system is converted to a relative quality index number, q, from 1 to 10 for each factor, with 10 assigned to the candidate system which best meets the specified criteria. A weighting factor, w, of 1 to 10 is established for each evaluation factor, with 10 assigned to the factor considered most important in meeting overall mission requirements. The weighting factors were selected by this researcher, and are considered appropriate for the design of an AUV system. It is recognized that other evaluation criteria and other weighting factors could well be used with equal justification, but those used in this study are considered reasonable for this design.

Reproduced with permission of the copyright owner. Further reproduction prohibited without permission.

A Figure of Merit, Q, is established for each system evaluated and is defined as the summation of each quality index number, q, multiplied by its weighting factor, w, or:

$$Q = \sum_{i=1}^{n} w_i \, q_i \qquad \text{(Eqn. 7)}$$

where: Q = Figure of Merit

q_i = quality index number for factor i

w_i = weighting factor for factor i

i = index of summation, 1 to n

n = number of factors evaluated

This evaluation technique is similar to the technique described by Alger and Hays [81] and is used in the decision analysis techniques of Kepner and Tregoe [82].

<u>Systems Evaluated</u>. The following systems are included in the evaluation:

(1) Primary storage battery (PRI BAT)

(2) Secondary storage battery (SEC BAT)

(3) Acid fuel cells (ACID FC)

(4) Alkaline fuel cells (ALK FC)

(5) Steam engine - nuclear reactor (STM-NR)

(6) Steam engine - hydrocarbon fuel (STM-HF)

(7) Steam engine - metallic fuel (STM-MF)

(8) Gas turbine - nuclear reactor (GT-NR)

(9) Gas turbine - hydrocarbon fuel (GT-HF)

(10) Gas turbine - metallic fuel (GT-MF)

(11) Stirling engine - nuclear reactor (STIR-NR)

(12) Stirling engine - hydrocarbon fuel (STIR-HF)

Reproduced with permission of the copyright owner. Further reproduction prohibited without permission.

(13) Stirling engine - metallic fuel (STIR-MF)

(14) Diesel engine, closed cycle (DIES)

Some of the basic systems for which data has been obtained were evaluated as not meeting the mandatory criteria. These systems are:

(1) Thermal Energy Storage: limited endurance within reasonable weight requirements.

(2) Radioisotope Sources: limited power levels.

(3) Primary Storage Batteries: limited endurance.

(4) Secondary Storage Batteries: limited endurance.

While primary and secondary batteries do not meet endurance requirements, they are included in the evaluation to provide an additional basis for comparison.

Systems Not Evaluated. Other systems for providing energy are available, but were not considered appropriate for evaluation at this time for the specific application. Accordingly, evaluation data was not obtained for these systems. Systems in this category are described below.

(1) Combined Cycle Plants. These plants combine two different thermodynamic cycles to provide a more efficient energy system. In practice, a higher-temperature thermodynamic cycle rejects its heat to a lower-temperature thermodynamic cycle, usually using a different working fluid. Plants of this type are generally used in large power plants (i.e., several megawatts) and are not considered practicable for use in a small vehicle.

(2) Magnetohydrodynamic Systems (MHD). These systems

Reproduced with permission of the copyright owner. Further reproduction prohibited without permission.

generate electricity by passing ionized gases through a magnetic field. In some systems the gases are a combination of air, combustion products and a small amount of an easily ionized element (e.g., potassium or cesium). An open cycle MHD is commonly spoken of as a replacement for the gas turbine, in that it would operate on the same thermodynamic cycle but at a much higher temperature. Closed cycles have also been developed using cesium vapor ionized in an inert gas (argon or neon), where the cesium operates in a Rankine cycle and the inert gas uses a Brayton cycle [4]. MHD systems are not considered sufficiently developed for use on a vehicle at this time.

(3) Compressed-Air Energy Storage. These systems store a large volume of air at very high pressures to provide peaking power for short periods of time for large power plants. A system on the Hunte River in West Germany, for example, is designed to produce 290 mw of peaking power for 2 hours [4]. The energy efficiency of such a system is about 10%. Space, weight and endurance requirements for an underwater vehicle application make this alternative impractical.

(4) Thermoelectric Generators. These systems operate on a concept similar to thermocouples, in that they use semiconductors which generate a voltage due to the temperature difference between a heat source and a heat sink. Lead telluride and silicon germanium are the most commonly used materials. The maximum thermal efficiency is

Reproduced with permission of the copyright owner. Further reproduction prohibited without permission.

a function of the temperature difference. For a difference of 600K the theoretical thermal efficiency is about 11%. Actual thermal efficiencies were found to be about half the theoretical values. This concept is dominated by the need for emitter temperatures in the range of 2600F - 3500F in order to get a useful output. This has limited development efforts to the use of nuclear reactors as a source of heat [4]. Development problems have been substantial, and this concept is not considered to be adequately developed for consideration at this time.

(5) Flywheels. A spinning flywheel operating in a vacuum environment can be used to store energy. Weight to energy ratios on the order of 25 kg/kw-hr can be achieved for flywheels, which is significantly better than most storage batteries [13]. Efficiencies of 92.8% have been calculated. Flywheels have been developed which have demonstrated the ability to store energy for several days, but no production systems could be found in the literature. This system is considered to be insufficiently developed for consideration at this time.

Results of Evaluation. Evaluation data for each of the systems considered is contained in Appendix A.2. The numbers in brackets for the data in the Appendix correspond to those in the list of references. A matrix of all the evaluation data is given in Appendix A.2.8. The resultant scores and rankings are extracted from this matrix and summarized in Table 13. The gas turbine plant with a

Reproduced with permission of the copyright owner. Further reproduction prohibited without permission.

nuclear reactor heat source is ranked as the best system for this application, with the gas turbine and metallic fuel a close second choice. Sensitivity of the final rankings to the assigned weighting factors is shown in Table 14. The first column gives the relative rankings from Table 13 when all evaluation factors are considered. The rest of the columns show the relative rankings when one factor is not included in the evaluation (e.g., under the column labeled "Less Rel", the relative rankings are shown for the condition where reliability is not considered). These results indicate some sensitivity on the part of the optimum alternative of the gas turbine - nuclear reactor system to the factors of reliability and endurance.

System Selection. The gas turbine - nuclear reactor energy system appears to be the optimum system for the LRAUV application, based on the technical factors established for the evaluation. However, the current political climate in the U.S. today relative to nuclear power plants would appear to dictate against the use of nuclear power if other alternatives are feasible. In addition, there is some indication of an implicit U.S. government policy which discourages the use of nuclear power on unmanned vehicles other than space vehicles. Although these are non-technical considerations and are beyond the scope of this study, they appear to be real considerations at this time. Accordingly, the gas turbine - metallic fuel system was selected for further development and incorporation into the design.

Reproduced with permission of the copyright owner. Further reproduction prohibited without permission.

Table 13. Summary Results of Evaluation of Energy Systems

SYSTEM	UNWEIGHTED		WEIGHTED	
	SCORE	RANK	SCORE	RANK
Primary Storage Battery	38	6	284	6
Secondary Storage Battery	41	2	306	4
Acid Fuel Cell (SPE)	41	2	319	3
Alkaline Fuel Cell	40	5	304	5
Steam Engine - Nuclear Reactor	33	11	272	9
Steam Engine - Hydrocarbon Fuel	29	13	222	13
Steam Engine - Metallic Fuel	35	8	281	8
Gas Turbine - Nuclear Reactor	41	2	332	1
Gas Turbine - Hydrocarbon Fuel	35	8	268	10
Gas Turbine - Metallic Fuel	42	1	326	2
Stirling - Nuclear Reactor	34	10	267	11
Stirling - Hydrocarbon Fuel	31	12	226	12
Stirling - Metallic Fuel	38	6	284	6
Diesel Engine	28	14	216	14

Reproduced with permission of the copyright owner. Further reproduction prohibited without permission.

Table 14. Summary Results of Sensitivity Analysis of Energy Systems Evaluation

System	All Fact	Less Rel	Less Depth	Less Wt	Less End	Less Quiet	Less Eff
PRI BAT	6	12	7	4	3	11	10
SEC BAT	4	8	5	2	1	7	6
ACID FC (SPE)	3	4	2	6	5	3	3
ALK FC	5	6	4	7	4	4	4
STM - NR	9	9	10	5	12	6	5
STM - HF	13	13	14	13	13	12	12
STM - MF	8	7	9	8	9	5	8
GT - NR	1	3	1	1	6	1	1
GT - HF	10	10	6	11	8	9	11
GT - MF	2	1	3	3	2	2	2
STIR - NR	11	5	11	9	10	10	7
STIR - HF	12	11	12	14	11	14	13
STIR - MF	6	2	7	10	6	8	9
DIES	14	14	13	12	14	13	14

NOTE:

1. The column under "All Fact" shows the results of the weighted evaluation when all evaluation factors are included, and is identical to the last column of Table 13.

2. The column under "Less Rel" shows the relative rankings when the factor of reliability is excluded. The results when other factors are excluded individually are shown in succeeding columns.

Reproduced with permission of the copyright owner. Further reproduction prohibited without permission.

Thruster System Analysis

General. The thruster system was previously defined to include that part of the propulsion system which takes the power generated by the heat source and power systems and converts it to a thrust for propelling the vehicle. It can be broken down functionally into the power transmission system and the propulsor system. The analysis of the thruster system is much simpler than the analysis of the energy system in that fewer viable options are available. In addition, the selection of an energy system for the LRAUV would further limit the number of feasible candidates for the thruster system. The system evaluation factors developed for the entire propulsion system will continue to be used in selecting from feasible candidates for the LRAUV power transmission and propulsor systems. However, a more qualitative analysis will be conducted for these systems, rather than the quantitative type of analysis conducted for the energy system, based on the limited options.

Analysis of Power Transmission Systems. The selection of a gas turbine for the power generating system eliminates the direct mechanical drive system, without reduction gears, from consideration due to the high turbine speed necessary for reasonable efficiency and its incompatibility with the relatively slow speed required for efficient propeller operation. Reliability and efficiency considerations eliminate the hydraulic transmission system from consideration, leaving the following systems as viable can-

Reproduced with permission of the copyright owner. Further reproduction prohibited without permission.

didates for the LRAUV power transmission system:

(1) Direct mechanical drive with reduction gears;

(2) Electric drive.

We now examine these two systems with respect to the relevant evaluation factors.

(1) Reliability. The electric drive is clearly superior with respect to reliability, especially when used with externally mounted propulsion motors which would eliminate the need for a propulsion shaft hull penetration and shaft seal. The electric drive would have fewer moving parts and eliminates the necessity for additional lubricating systems which would most likely be necessary with the mechanical drive.

(2) Weight. The electric drive is again clearly superior. The weight of the reduction gears, propulsion shafting, associated shaft bearings, lubricating systems, pressure hull penetration and shaft seal would tend to be greater than that of electric motors, motor controllers, breakers and associated cabling.

(3) Depth Independence. The only significant difference between the two candidate systems in this regard would appear to center about the shaft seal and the need for deep operations. While no design depth was assumed for the LRAUV, a mechanical seal at the main pressure hull for the main shaft penetration would tend to place a depth limit on the design. All deep-diving submersibles built to date have eliminated this potentially hazardous component, generally

Reproduced with permission of the copyright owner. Further reproduction prohibited without permission.

through the use of externally mounted, pressure-compensated components. The electric drive appears to have the advantage in this category.

(4) Endurance. This factor is not considered applicable in this case.

(5) Efficiency. No clearcut advantage can be identified in this case. Specific detail designs would have to be compared to evaluate the most efficient transmission system.

(6) Quietness. The electric drive was specifically selected by the U.S. Navy for some of its nuclear-powered submarines, over the mechanical drive with reduction gears, based entirely on noise reduction characteristics. The electric drive is clearly superior in this category.

Analysis of Propulsor Systems. Based on reliability and efficiency considerations, the most viable candidates for a propulsor system for a relatively small submersible include the following:

(1) Open propeller;

(2) Ducted propeller;

(3) Shrouded propeller.

Since the propulsor system must accommodate a wide range of vehicle speeds in the ahead direction, along with a requirement for position keeping or hovering, the use of multiple propellers appears to be advantageous. Reliability considerations would also be enhanced significantly with this arrangement.

Reproduced with permission of the copyright owner. Further reproduction prohibited without permission.

For high speed propulsion, the open propeller is generally considered more efficient than ducted or shrouded propellers. The higher potential for damage, however, would tend to detract from the reliability of the open propeller. Ducted propellers have generally been limited to low vehicle speeds and are usually used to provide vertical thrust or lateral maneuvering thrust. Shrouded propellers have the potential for use in both horizontal and vertical thrust, as well as in lateral maneuvering. At higher vehicle speeds, some loss in efficiency will be experienced with shrouded propellers due to the added drag of the shroud.

Thruster System Selection

Power Transmission System. The electric transmission system appears to be the optimum system for the LRAUV application, based on its advantages over the mechanical drive with respect to reliability, weight, depth considerations and quietness.

Propulsor System. A multiple propeller system appears to be the optimum system to meet all expected thrust demands and to enhance overall system reliability. A combination of shrouded propellers for ahead and astern thrust, together with ducted propellers for lift and lateral maneuvering thrust, appears to be optimum.

Reproduced with permission of the copyright owner. Further reproduction prohibited without permission.

Summary

The engineering design process was examined and seen to consist of seven phases. The initial phases of recognition and definition were essentially accomplished in Section I of this study, while the data collection phase was accomplished in Section II. The next three phases of analysis, synthesis and evaluation are contained in this section.

Propulsion system design criteria were established, based on mission requirements and vehicle characteristics, which led to the development of specific factors for evaluating candidate systems. Two major analyses were developed and conducted, a quantitative analysis of energy systems and a more qualitative analysis of thruster systems.

The nuclear reactor heat source with a gas turbine power plant was evaluated as the optimum energy system, with the metallic fuel / gas turbine system a close second. Non-technical factors currently affecting the nuclear power industry suggest that a nuclear reactor system may not be a realistic alternative at this time. Accordingly, the metallic fuel / gas turbine system was selected for the conceptual design.

The thruster system selected includes an electrical propulsion system with electrical propulsion motors and both ducted and shrouded screw propellers to meet mission requirements in an optimum manner.

Reproduced with permission of the copyright owner. Further reproduction prohibited without permission.

IV. DESCRIPTION OF CONCEPTUAL DESIGN

Introduction

The conceptual AUV propulsion plant consists of four major subsystems, as shown on Figure 3:

(1) Heat Source System: A metallic fuel is used to generate thermal energy in an exothermic chemical reaction with a reactant, and is used in conjunction with a heat engine in the normal mode of providing power.

(2) Power Generating System: A closed Brayton cycle (CBC) gas turbine and generator are used to convert thermal energy into mechanical and electrical energy in the normal mode. An electrical storage battery is provided as a limited source of power in the backup mode.

(3) Thruster System: Electrical energy is converted into mechanical energy to provide vehicle thrust for various operational modes by means of propellers.

(4) Management System: A knowledge-based system is used to supervise the operation of the propulsion plant in an autonomous manner.

A brief description of each major system is provided in the subsequent sections.

Reproduced with permission of the copyright owner. Further reproduction prohibited without permission.

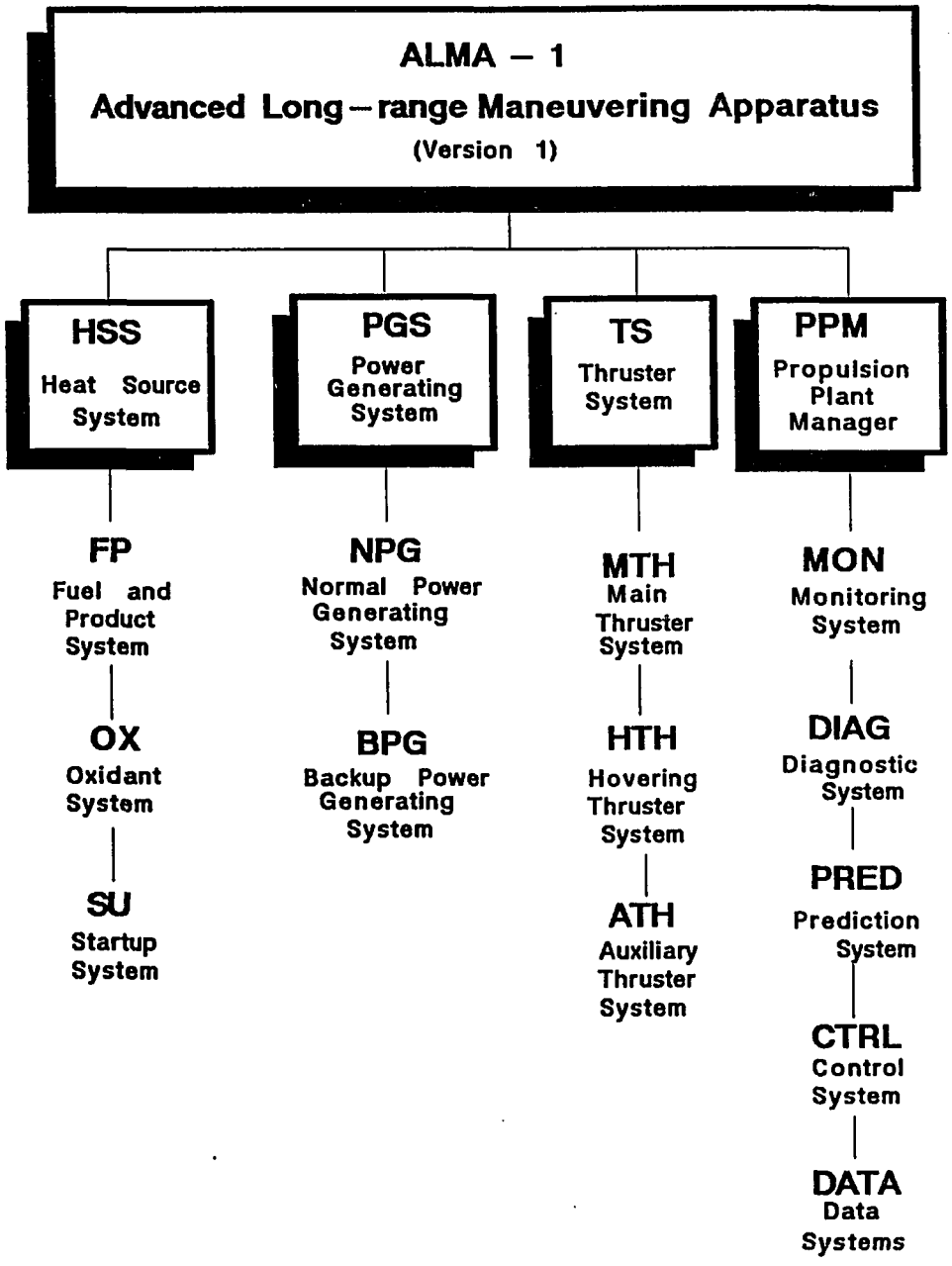

Figure 3. ALMA–1 Propulsion System Functional Breakdown

Reproduced with permission of the copyright owner. Further reproduction prohibited without permission.

Figure 4. Propulsion System Device Identification

IDENTIFICATION SCHEME:

Sensors and devices are identified as "XYZ", where:
X = Type of device (one or two upper case letters)
Y = Subsystem designation (one or more integer numbers)
Z = Unique subsystem designation (lower case letter)

TYPES OF DEVICES:

P	Pressure sensor
T	Temperature sensor
L	Level sensor
N	Speed sensor (rpm)
V	Voltage sensor
A	Amperage or current sensor
B	Battery condition sensor
VB	Vibration sensor
FM	Flow meter
CV	Control valve
RV	Regulating valve
BV	Bypass valve
S	Electrical switch

SUBSYSTEM IDENTIFICATION:

1	Fuel and Reaction Product System
2	Oxidant System
3	Startup System
4	Power Generating System, Normal
5	Power Generating System, Backup
6	Main Thruster System
7	Hovering Thruster System
8	Auxiliary Thruster System

EXAMPLE:

P2b Pressure sensor, oxidant system, unit "b"

Reproduced with permission of the copyright owner. Further reproduction prohibited without permission.

Heat Source System

The chemical energy heat source system, as shown in Figure 5, consists of the following major subsystems:

(1) Fuel system

(2) Oxidant system

(3) Reactor and reaction product system

Molten lithium is used as the fuel, or reactant, and sulfur hexafluoride (SF_6) is used as the oxidant. (See Appendix A.3.5 for properties of lithium and sulfur hexaflouride). On initial plant startup an aluminum-chlorate starter is used to change the solid lithium fuel to a liquid form. The reaction of the starter heats the lithium to approximately 1200 F, well above its melting point of 354 F. The SF_6 oxidant is stored as a liquid. It is heated to maintain a vapor pressure sufficient to inject it into the reactor containing liquid lithium fuel. The exothermic chemical reaction is represented in the following equation:

$$8Li + SF_6 = Li_2S + 6LiF + 20{,}000 \text{ Btu/lb Li} \quad \text{(Eqn. 6)}$$

The heat generated by this reaction is used as a heat source for the working fluid of the power system, which passes through tubes in the reactor.

The reaction products (referred to as "products") are all liquid and more dense than either the fuel or the oxidant. During operation the products accumulate at the bottom of the reactor, where they are retained until the contents of the reactor are replaced with a fresh charge of lithium fuel after each mission.

Reproduced with permission of the copyright owner. Further reproduction prohibited without permission.

Reproduced with permission of the copyright owner. Further reproduction prohibited without permission.

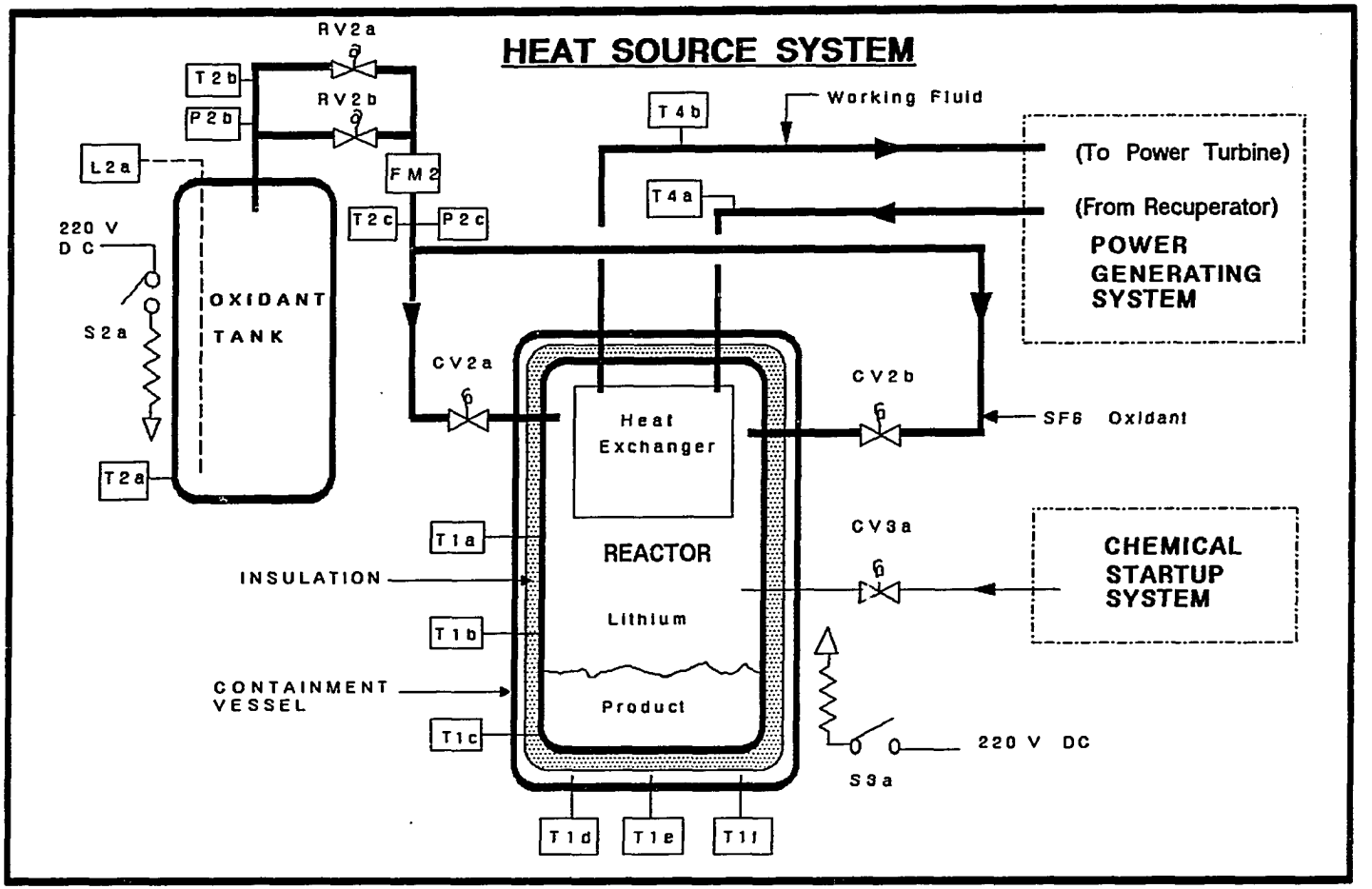

Figure 5. Heat Source System Diagram

The SF_6 oxidant, which is stored as a liquid, has a vapor pressure of approximately 300 psia at 60 F. Electrical heaters are available to provide the necessary heat of vaporization if needed to provide a supply of SF_6 gas at the desired pressure for injecting into the lithium fuel in the reactor. Pressure, temperature and flow sensors provide the necessary measurements to determine the mass flow rate of the oxidant. The oxidant mass flow rate is essentially a function of the required power level.

In addition to storing the lithium fuel, the reactor vessel also serves as a combustion chamber and a heat exchanger. The injection of the gaseous oxidant into the reactor containing molten lithium reactant results in an exothermic reaction, and the heat of this reaction is transferred to the working fluid which passes through the heat exchanger part of the reactor. The SF_6 oxidant is injected into the upper part of the reactor and the heavier reaction products accumulate in the lower part of the reactor. Temperature sensors in the reactor vessel wall monitor the reaction as well as the temperature of the oxidant injector tips, which are susceptible to clogging by the products. Leakage of molten lithium or products from the reactor is contained within a containment vessel surrounding the reactor vessel. Any such leakage would result in a significant increase in the temperature of the containment, and is monitored by a temperature sensor.

An electric startup system is provided to restart the

Reproduced with permission of the copyright owner. Further reproduction prohibited without permission.

heat source system in the event it shuts down during a mission for a sufficiently long period such that the contents of the reactor become solidified. An electric heater is used to heat the solidified fuel in the area of the injectors to the point where it becomes molten. Energy requirements for restart are estimated in Appendix A.3.5. When the reactor wall temperature sensors indicate that the reactor contents in that area have become molten, the oxidant injectors can be used to resume the normal chemical reaction process between the reactant and the oxidant, which will complete the lithium melting process and return the system to its normal operating condition.

Power Generating System

The power generating system is shown in the diagram of Figure 6, and consists of two major subsystems:

(1) Normal power system

(2) Backup power system

The normal power system is a closed Brayton cycle (CBC) gas turbine system which uses an inert gas as a working fluid. The system incorporates a turbo-generator for converting the mechanical energy into electrical energy for vehicle electrical service and electrical propulsion, and a capability for charging the backup electrical storage battery. The CBC plant includes a cooler, which uses the ambient sea water as a heat sink, and a regenerator or recuperator to capture some of the thermal energy of the turbine exhaust and thus improve thermal efficiency.

Reproduced with permission of the copyright owner. Further reproduction prohibited without permission.

Reproduced with permission of the copyright owner. Further reproduction prohibited without permission.

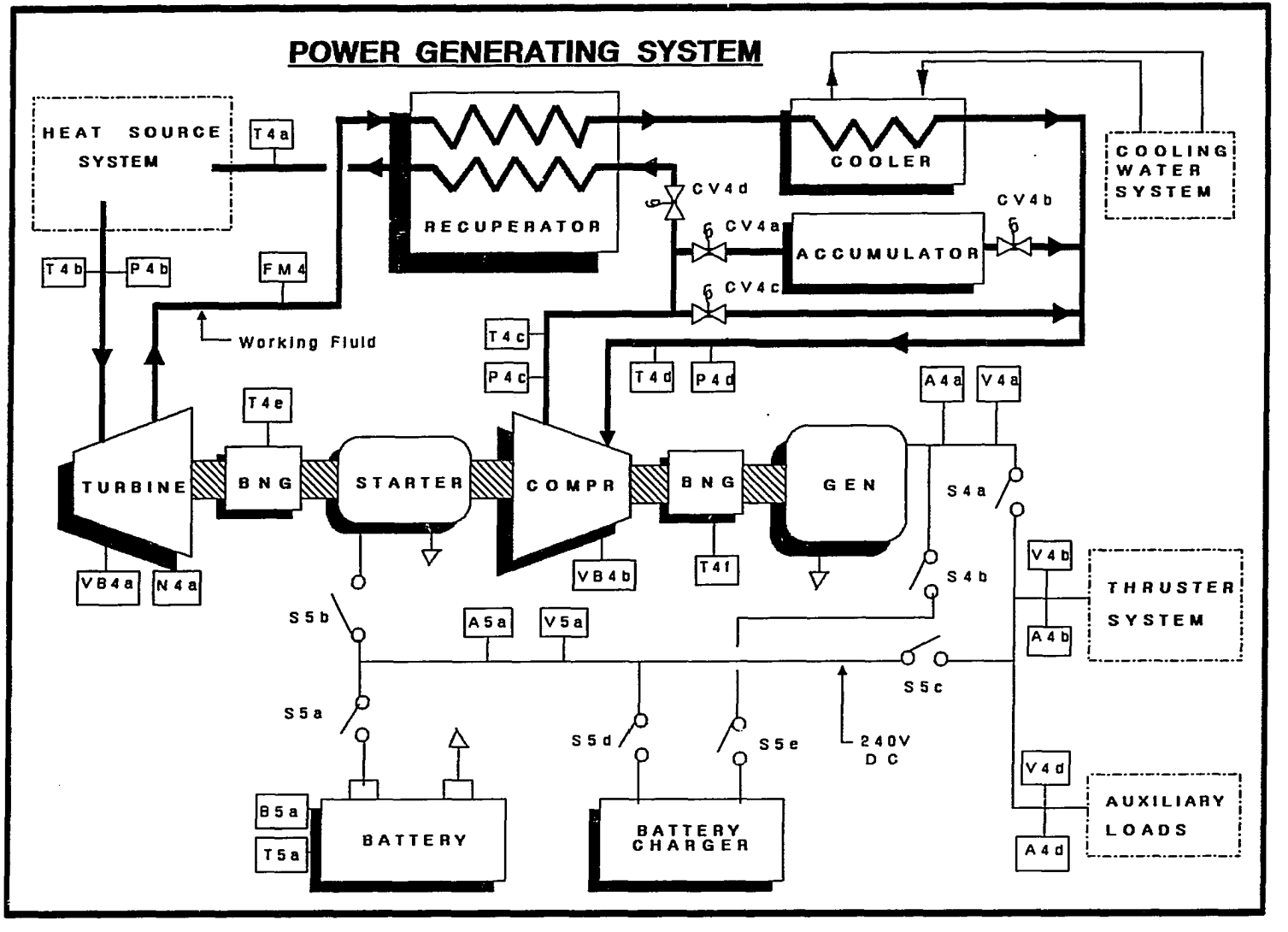

Figure 6. Power Generating System Diagram

For ease of control, the power turbine and attached generator are operated at essentially a constant speed. Generator load variations, primarily as a result of variations in propulsion speed requirements, are met by modulating the mass flow of the working fluid and the heat rate of the heat source system. The mass flow rate is varied by controlling the amount of working fluid available to the power turbine, which is controlled by the inventory control accumulator. Control valves on the inlet and outlet of the accumulator allow working fluid to be charged into the accumulator for lower power demands, or discharged from the accumulator for higher power demands. For a more rapid response to fluctuating power demands, a bypass valve is installed which permits a part of the working fluid to bypass the heat source and power turbine during power reduction transients. A heat balance diagram and calculations are provided in Appendix A.4.1.

The power generating units and shafting are supported by journal bearings of a gas foil type, which are supplied with high pressure working fluid from the compressor. The use of this type of bearing eliminates the need for a lubricating oil system, thus enhancing plant design simplicity and reliability. Startup of a power generating unit is accomplished by an electric starting motor installed on the main shafting and powered from an electric storage battery of the rechargeable secondary type.

Sensors installed in the power generating system

Reproduced with permission of the copyright owner. Further reproduction prohibited without permission.

include temperature and pressure sensors for monitoring working fluid parameters and bearing temperatures. Vibration sensors are installed on power turbines and compressors to detect and help diagnose malfunctions or potential failures. A power unit shaft speed sensor is installed for use in maintaining required shaft speed.

The electrical portion of the power generating system consists of a DC turbo-generator, a nickel-hydrogen secondary storage battery, a battery charger, power unit starting motor, power distribution cables, switches and associated sensors. The electric storage battery is used primarily as a backup source of power in the event that the heat source system or normal power generating unit became inoperable. It can also be used to power the electric startup motor for the normal power generating units. The nickel-hydrogen battery is a sealed, maintenance-free system with good energy density, good high rate performance characteristics, good low temperature performance and an exceptionally good cycle life (about 10,000 cycles). This battery has demonstrated a high tolerance for overcharge and overdischarge and an ability to stand partially discharged without degradation [7].

The battery charger allows recharging of the battery during operation by using power from the turbo-generator. A battery ampere-hour sensor is used to evaluate the state of battery charge or discharge. The electrical distribution system is arranged to allow the generator or the battery to

Reproduced with permission of the copyright owner. Further reproduction prohibited without permission.

provide power to the DC power buss. The DC power buss provides power to the thruster system and to all non-propulsion electrical loads throughout the vehicle. Current and voltage sensors, as well as switch position sensors, are installed to monitor system operation.

Thruster System

The thruster system provides the capability for converting electrical energy into mechanical energy in the form of thrust to propel, maneuver and position the vehicle. The thruster system can be broken down functionally into:

(1) Power transmission system;

(2) Propulsor system.

The system is designed to accommodate all phases of vehicle operation, including transit to and from the mission area, search in the mission area, dynamic positioning over an object (hovering). The major components are shown on the diagram of Figure 7 and include the following (see Figure 13 for arrangement of thruster system components):

(1) Main Propulsion Unit. This includes the main propulsion motor, electronic controller, and main propeller.

(2) Hovering Unit. This includes two motors, two controllers, and two ducted propellers;

(3) Auxiliary Propulsion Unit. This includes two auxiliary propulsion motors, two controllers, and two shrouded propellers;

(4) Electrical Distribution System. This includes various electrical cables and switches;

Reproduced with permission of the copyright owner. Further reproduction prohibited without permission.

Reproduced with permission of the copyright owner. Further reproduction prohibited without permission.

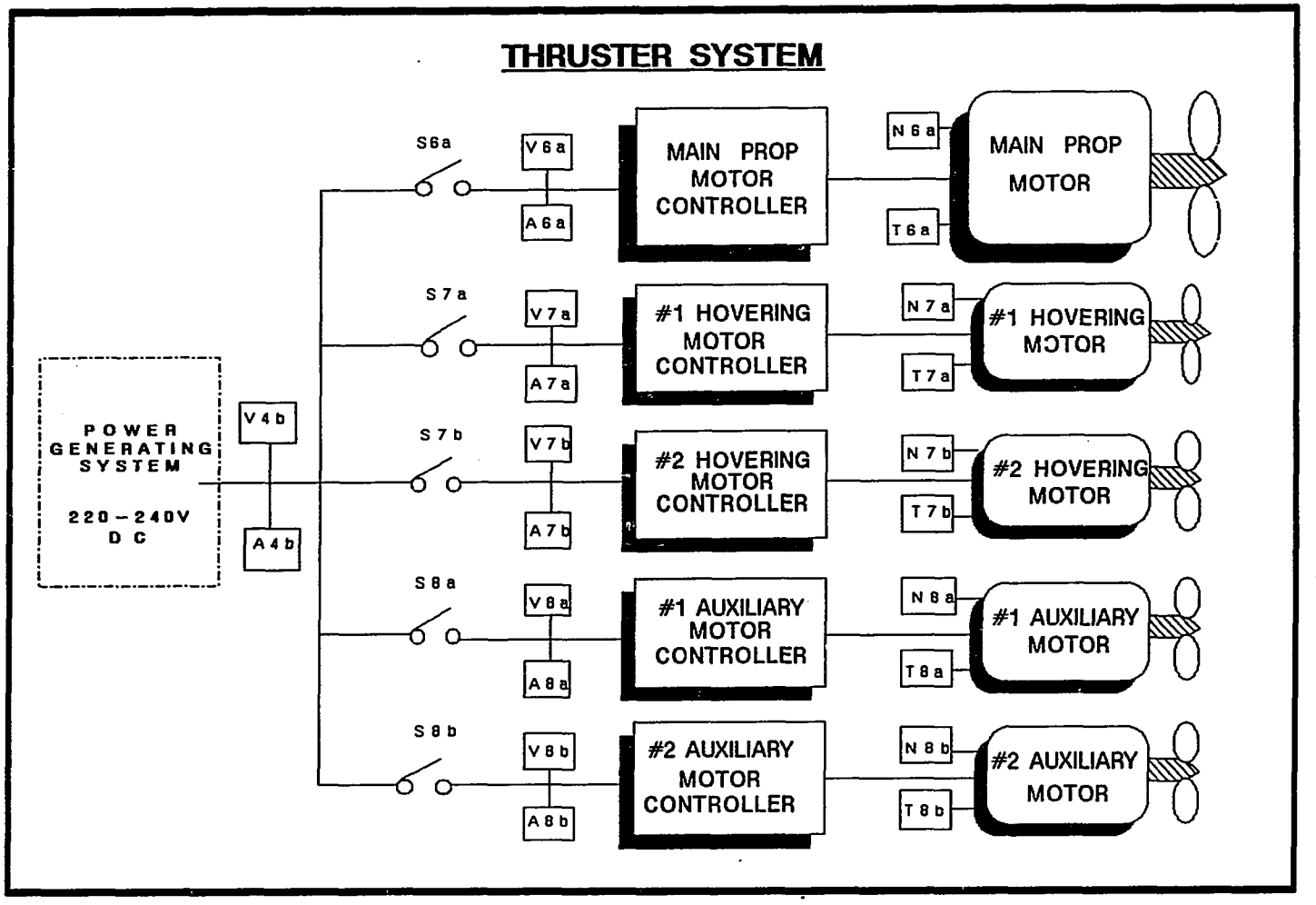

Figure 7. Thruster System Diagram

(5) Sensors. This includes various sensing devices for monitoring the operation of the system.

All propulsion motors are brushless, 3-phase, AC motors externally mounted and pressure compensated in oil. Each motor has an electronic controller, similar to the type currently used on ALVIN [34], which performs the functions of inversion of the DC power supplied, speed regulation, electronic commutation control and system overload protection. Thruster data is given in Appendix D.2.

The main propulsion unit is designed to support a majority of the vehicle propulsion requirements, including the phases of transit and search. The main propulsion motor provides power to a single shrouded fixed-pitch propeller at the stern of the vehicle. The shroud improves propulsive efficiency and contributes to reliability by protecting the propeller from damage by collision with other objects. The hovering unit is designed to maintain a fixed vertical position of the vehicle in the water column. It consists of two relatively small (1 kw) reversible, pressure-compensated thruster motor and propeller assemblies located in ducts. The cylindrical ducts have an axis rotated 30 degrees from the vertical, one to port and one to starboard, and open to sea at both ends. When both motors are operating to produce upward thrust on the vehicle, the horizontal thrust vectors cancel and the vertical thrust vectors are additive. This provides a net vertical thrust for vertical position keeping. When the motors are operating in opposite

Reproduced with permission of the copyright owner. Further reproduction prohibited without permission.

directions, the vertical thrust vectors cancel and the net thrust is horizontal. This enables the system to be used for lateral maneuvering. The hovering motor controller responds to depth and depth rate parameters to maintain vehicle altitude at very low (near-zero) vehicle forward speeds.

The auxiliary propulsion units are designed to provide a dynamic positioning capability at low vehicle speeds (e.g., 3 knots and less). The auxiliary units also serve to provide a reduced capacity standby capability to backup the main propulsion unit in the event it becomes inoperable. The system consists of two reversible, shrouded propellers mounted on the aft horizontal control surfaces and powered by small (1 kw) pressure compensated motors. The shrouds around the propellers can be tilted to obtain pitch and yaw motion for the vehicle. Operating the propellers in opposition (i.e., one with forward thrust and one with aft thrust) can also provide increased vehicle turning or yaw motion. The motors are capable of variable speed operation in both directions.

Electrically controlled switches control power to the thruster motors. Although all thruster motors could be energized at the same time, the control system algorithm would normally limit operation of the hovering unit to times when the main thruster unit is not required (i.e., low forward speeds using minimum power).

Reproduced with permission of the copyright owner. Further reproduction prohibited without permission.

Management System

Management of the propulsion plant during autonomous operation of the vehicle is accomplished by the Propulsion Plant Manager (PPM) software system which is based on the use of Artifical Intelligence techniques. The PPM system, as shown in Figure 8, contains the following subsystems: monitoring, diagnosis, prediction, control and data management.

PPM Model

The PPM model uses three power system states and two propulsion system contexts for portraying overall propulsion plant status. These are shown in Figure 9, and are defined in the following paragraphs.

Power System States. These states define the primary output of the power system, exclusive of auxiliary loads, and include the following:

(1) Propulsion State. The power system is being used primarily to support propulsion system demands. Within this state, three propulsion system power contexts (FULL, MEDIUM, MINIMUM) and three propulsion mode contexts (NORMAL, REDUCED NORMAL, EMERGENCY) are available.

(2) Battery Charging State. The power system is being used primarily to support battery charging requirements. Propulsion power is feasible in the REDUCED NORMAL mode only with three propulsion power contexts (FULL, MEDIUM, MINIMUM).

(3) Restart State. The backup power system is being used to restart the normal power system. No propulsion

Reproduced with permission of the copyright owner. Further reproduction prohibited without permission.

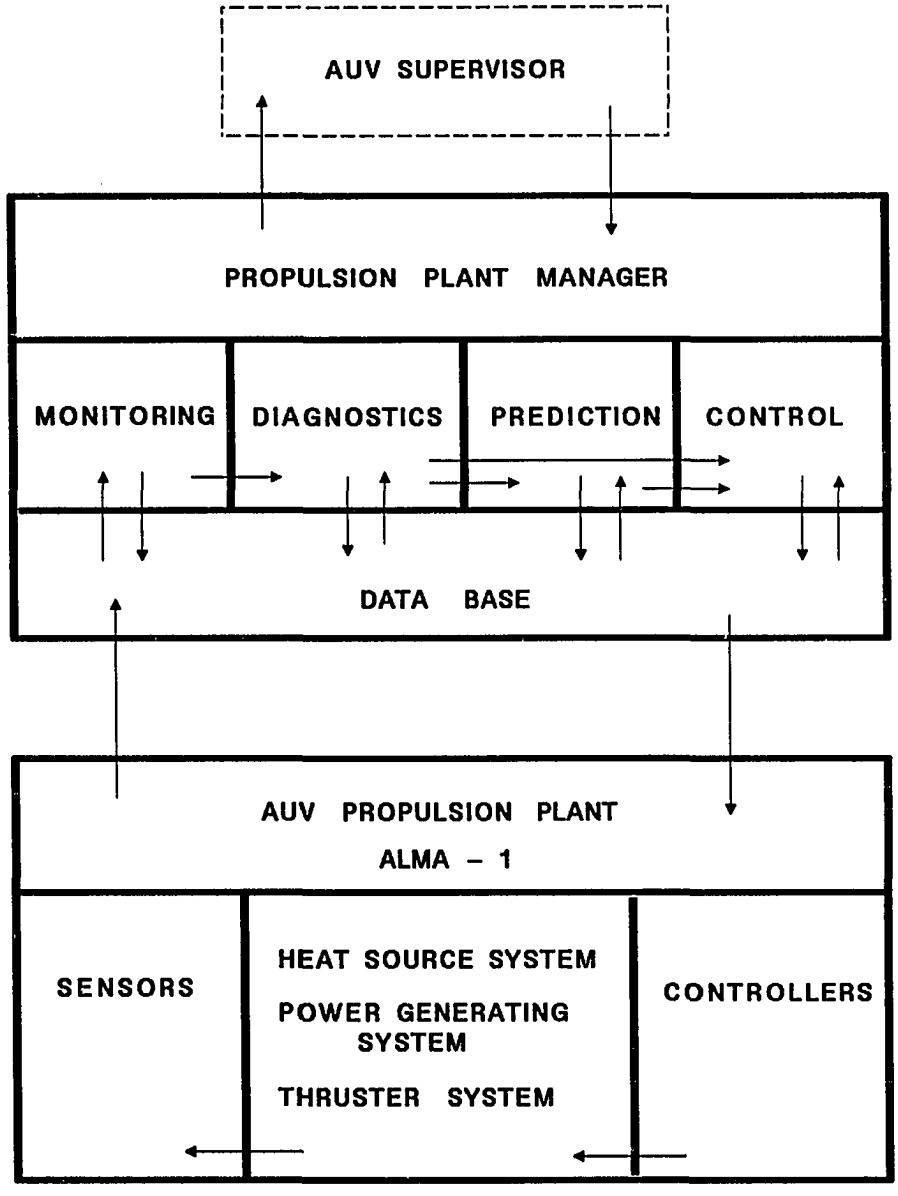

Figure 8. Propulsion Plant Manager Functional Diagram

Reproduced with permission of the copyright owner. Further reproduction prohibited without permission.

Figure 9. Power System States and Contexts

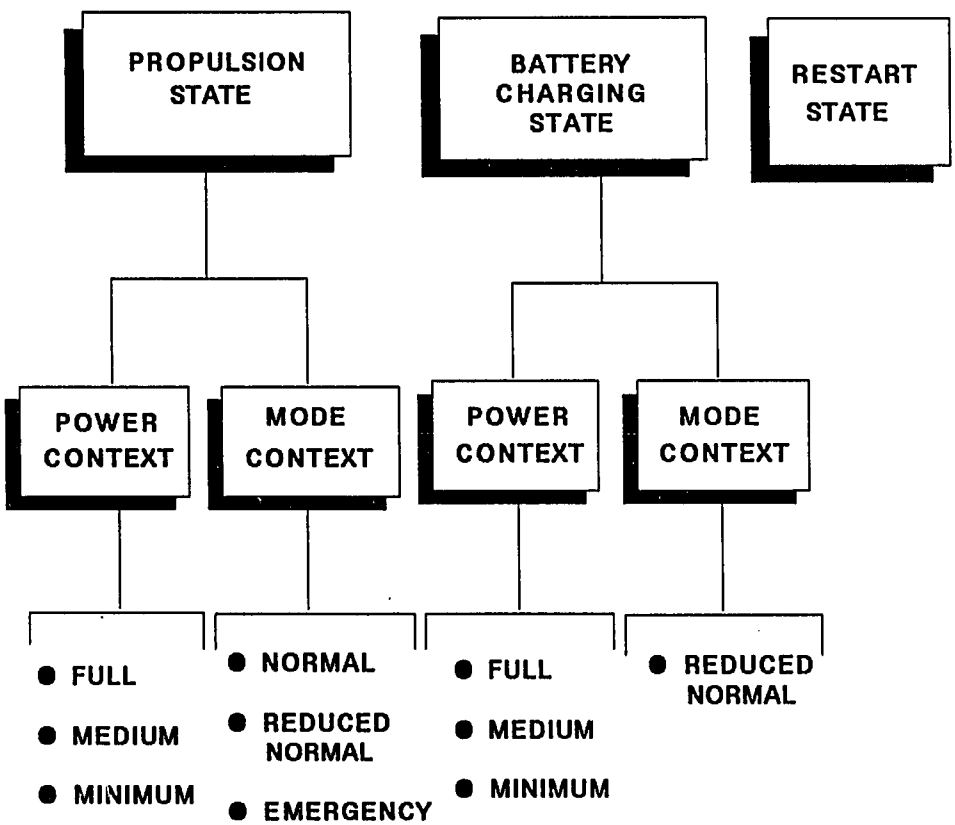

Reproduced with permission of the copyright owner. Further reproduction prohibited without permission.

power is provided.

Propulsion System Contexts. Two basic types of contexts are defined for the propulsion system, as shown in Figure 10:

(1) Mode Context. This context is used to define capability of the propulsion system in responding to mission requirements. Three levels are provided:

NORMAL mode. This is the normal propulsion mode using the heat source system, the CBC normal power generating system and appropriate thruster system.

REDUCED NORMAL mode. This mode is similar to the NORMAL mode, but with a reduced capability as a result of some degradation of the system.

EMERGENCY mode. This mode represents a significant degradation of propulsion capability, usually as the result of a major component or sub-system becoming inoperable, such as the heat source system or the CBC turbine system. This mode would usually involve meeting power requirements through the use of the backup power system.

(2) Power Context. Three levels of power are provided when operating in the NORMAL mode or REDUCED NORMAL mode:

FULL power. This level provides power to meet the normal requirements for the transit phase. In the NORMAL mode, the CBC power system would be operating at its design capacity with the main thruster system operating to propel the vehicle at the specified transit speed.

MEDIUM power. This is the normal power level used during the search phase of the mission. In the NORMAL mode,

Reproduced with permission of the copyright owner. Further reproduction prohibited without permission.

Figure 10. Propulsion System Contexts

Power Context	Mode Context		
	NORMAL	REDUCED NORMAL	EMERGENCY
FULL	SF6 Heat Source CBC Power Unit Main Thruster Transit Phase Speed: 10 kt	SF6 Heat Source CBC Power Unit Main Thruster Transit Phase Speed: 5-10 kt * (Aux Thrust)	Secondary Battery Main Thruster Transit Phase Speed: 5 kt
MEDIUM	SF6 Heat Source CBC Power Unit Main Thruster Search Phase Speed: 5 kt * (Aux Thrust)	SF6 Heat Source CBC Power Unit Main Thruster Search Phase Speed: 3-5 kt * (Aux Thrust)	N.A.
MINIMUM	SF6 Heat Source CBC Power Unit Aux Thrusters Hover Thrusters Positioning Phase Speed: 0-3 kt	SF6 Heat Source CBC Power Unit Aux Thrusters Hover Thrusters Positioning Phase Speed: 0-3 kt	Secondary Battery Aux Thrusters Transit Phase Speed: 3 kt

* Auxiliary thruster system available as a backup to the main thruster system in these contexts.

Reproduced with permission of the copyright owner. Further reproduction prohibited without permission.

it would involve the CBC power system providing power to the main thruster system to meet search speed requirements and the heat source system operating at less than maximum level. The auxiliary thruster system serves as an alternative thruster system in this configuration.

MINIMUM power. This is a reduced power level used during the positioning phase, in which the auxiliary thruster system and/or the hovering system are used to maneuver the vehicle at low speeds (3 knots or less) or to maintain a fixed vehicle position.

With three power levels available in both the NORMAL mode and the REDUCED NORMAL mode, in addition to an EMERGENCY mode, which has two power levels, a total of eight different contexts must be considered when evaluating propulsion plant data. For each of these contexts, the PPM model establishes three separate ranges for evaluating data:

(1) GREEN Range. The expected range of values when operating with no abnormalities.

(2) YELLOW Range. A range of values just beyond the normal GREEN range, but still considered acceptable for operation. Some corrective action may be required to prevent values from degrading and exceeding the limits of this range.

(3) RED Range. Any values beyond the YELLOW range. This is an unacceptable range and immediate corrective action is required to prevent damage.

Evaluation of a parameter as being in the YELLOW Range

Reproduced with permission of the copyright owner. Further reproduction prohibited without permission.

is analogous to receiving a cautionary warning. Operation is allowed to continue in the existing context, but the frequency of monitoring is increased for that parameter and related parameters, as established by the PPM knowledge base. An example of related parameters might be the pressure, temperature and flow rate of the working fluid at a particular point in the system. The intent of the increased monitoring rate is to provide a more timely diagnosis and prediction in order that corrective action, if required, would be initiated more rapidly and prevent parameters from entering the RED Range. Monitoring of related data allows confirmation of an abnormal condition or establishing that the abnormal measurement is spurious.

Sensor monitoring rate is a compromise between the need for timely data and the limitations of data storage capacity. When the sensed data is in the GREEN range with no abnormal trends, the need for frequent updates is less critical than when data or projected data is in a YELLOW or RED range. Increasing the monitoring rate for an abnormal condition or a projected abnormal condition does not impact the normal monitoring rate for other sensors. It is expected that monitoring frequency rates would be on the order of approximately once every 10 seconds for normal monitoring and once every second for abnormal conditions.

Within the PPM structure shown in Figure 8, the Diagnostic and Prediction systems act to identify the

Reproduced with permission of the copyright owner. Further reproduction prohibited without permission.

diagnosed condition to the Control system, where appropriate rules are activated to generate control signals to various propulsion plant devices (e.g., control valves, motor controllers, electrical switches, etc.). For any particular abnormality, the rules are prioritized such that the least drastic action would normally be initiated first. The intent is to try to resolve the abnormal condition with the least disruptive action feasible (i.e., a graduated response). For example, power context changes would normally be ordered prior to ordering mode context changes and the EMERGENCY mode reserved as a "last resort" mode.

Sensor System

The PPM model relies upon the propulsion plant sensors to provide data on the significant propulsion plant parameters. Sensors for the ALMA-1 propulsion plant are shown on the system diagrams of Figures 5, 6 and 7. The identification scheme for the sensors is given in Figure 4. A total of 79 sensors are installed in the ALMA-1 design. PPM data needs, as well as system reliability and criticality considerations, were taken into account in the design of the sensor system.

In cases where malfunctioning of a single sensor could have a significant impact on arriving at the correct diagnosis and potentially impact the success of the mission, redundant sensors are installed. For example, three sensors are installed to measure the temperature of the reactor vessel containment area. An abnormally high temperature

Reproduced with permission of the copyright owner. Further reproduction prohibited without permission.

indication from this area would indicate a possible leak in the reactor vessel, which would lead to shutting down the normal power generating system and shifting to the backup power system. No other types of sensors installed in the system could be used to verify this casualty in any meaningful manner. Although the reliablity of temperature sensors is extremely high (i.e., 0.05 failures expected in 10^6 hours), the potential impact of a malfunctioning sensor is critical. With three sensors, a two-out-of-three basis could be used to validate the high temperature condition or establish a sensor malfunction.

Whenever possible, the PPM model uses data from different types of sensors and different systems to verify the cause of an alarm condition. For example, data from pressure, temperature and flow sensors are used concurrently with switch and valve position sensors to distinguish between possible causes of abnormal data in the fluid systems.

The most probable system failure in the ALMA-1 plant, based on reliability data, is the clogging of oxidant injector valves. This is supported by reliability data from a similar development [94]. To accommodate this potential failure, five injector valves are installed where only one valve is needed at any one time. The PPM model, sensing oxidant pressures and flows and reactor temperature, is capable of identifying this problem and shifting injector valves in a pre-determined sequence.

Reproduced with permission of the copyright owner. Further reproduction prohibited without permission.

Knowledge Base

The PPM knowledge base is a rule-based system developed around the three major propulsion plant systems (Heat Source System, Power Generating System and Thruster System) and the eight sub-systems which comprise the three major systems. Rules within each of the eight sub-systems are based on receiving a primary input from monitoring sensors within that particular sub-system, and then combining sensor data from related sub-systems to verify the cause of an anomaly.

Sensor data which is monitored by the Monitoring System is classified initially as to status (GREEN, RED or YELLOW). The status is not only a function of the sensor value, but also of the power and mode contexts. Parameter limits for each status are established for each sensor within each power and mode context. RED or YELLOW status conditions trigger a response from the Diagnostic and Prediction systems. YELLOW conditions would normally result in an increased monitor rate for the applicable sensor, as well as provide the basis for an evaluation of a potential future condition by the Prediction system. RED conditions require immediate diagnoses and action.

RED and YELLOW status conditions are processed through the rules hierarchy, starting from a primary system rule to major sub-system rules through individual verification rules. A primary rule is established for each of the eight sub-systems. A primary rule is activated by the knowledge base identifying the sub-system containing the abnormal

Reproduced with permission of the copyright owner. Further reproduction prohibited without permission.

sensor data. The primary rule would then trigger the applicable major rule for a specific diagnosis based on the abnormal sensor data. The major rule then triggers verification rules to verify the diagnosis. A total of 43 major rules are used along with approximately 190 verification rules in the diagnostic process. In some circumstances the rules may identify the fact that the specific cause of the anomaly cannot be firmly established, due to a lack of supporting data. In those cases an increased monitoring rate is established for appropriate sensors. In other cases, the lack of supporting data can be used to verify a sensor malfunction.

The PPM knowledge base is also used to identify and initiate the appropriate corrective action in response to a diagnosed anomaly, or predicted anomaly. The current PPM knowledge base, however, does not contain a general Predictor capability at this time. The development of such a capability would require a time-based development system (such as PICON or G2) in order to establish time-based trends, and such a system was not available for this research effort.

When the appropriate corrective action is established through the use of the rules, the action is implemented through the Control system. For purposes of this research effort, the corrective action is identified within each verification rule. The results are printed out and system lineups modified accordingly.

Reproduced with permission of the copyright owner. Further reproduction prohibited without permission.

System Reliability

Analysis Techniques

The primary methods used to analyze the reliability of the proposed design were the Failure Modes and Effects Analysis (FMEA) and the Criticality Analysis, which were described in Section II. These techniques were applied to each of the major components in each of the major subsystems which comprise the propulsion system, namely, the heat source system, the power generating system and the thruster system. Reliability data for each component was obtained, in most cases, from the data accumulated for generic components by the Reliability Analysis Center [74]. Additional data was obtained from equipment and system manufacturers.

Available failure rate data has been based on the assumption of a constant failure rate (λ) and an exponential probability distribution factor (pdf). The following relationships apply [73,83,84]:

$$f(t) = \exp(-\lambda t), \quad 0 < t < \infty \qquad \text{(Eqn. 9)}$$

where: $f(t)$ = probability distrubution function

λ = failure rate for specified time interval

t = time

$$R(t) = 1 - F(t) = \int_t^{\infty} f(t)\, dt \qquad \text{(Eqn. 10)}$$

where: $R(t)$ = reliability function, or probability of no failure prior to some time t

$$F(t) = \int_0^t f(t)\, dt = 1 - \exp(-\lambda t) \qquad \text{(Eqn. 11)}$$

= cumulative distribution function

Reproduced with permission of the copyright owner. Further reproduction prohibited without permission.

Hence, R(t) for the exponential pdf can be defined by:

$$R(t) = \exp(-\lambda t) \qquad \text{(Eqn. 12)}$$

Values of failure rates for individual components are generally provided in the form of numbers of probable failures in 10^6 hours. The reliability, or probability of no failure over a given number of hours, can then be readily calculated for each component using Eqn. 12 and the expected hours of operation for the component during the period of interest. For the ALMA-1 propulsion system design, the period of interest would be the nominal period established for a single mission, and the hours of operation for each component can be derived from the mission requirements and mission profile.

For calculating overall system reliability, one must first construct a reliability block diagram of the system, in which each major component of the system is represented by a block. The reliability block diagram represents the failure logic within a system composed of subsystems and components [73]. Electrical and mechanical systems can be represented by blocks of components arranged in a series or parallel (redundant) configuration. Once the reliability block diagram has been constructed, the combination of series-parallel configurations are transformed into a combination of reliability equations that collectively characterize the system reliability.

For the series configuration, the successful operation of each block in the configuration is required for the

Reproduced with permission of the copyright owner. Further reproduction prohibited without permission.

success of the entire configuration. This can be expressed in terms of the reliability function by the following:

$$Rs(t) = \prod_{i=1}^{n} R_i(t) \qquad \text{(Eqn. 13)}$$

where: $Rs(t)$ = reliability for the series configuration

$R_i(t)$ = reliability of individual block in series

n = number of blocks in series

For the parallel, or redundant, configuration the operation of only one block is required for the success of the configuration. This can be expressed as follows:

$$Rp(t) = 1 - \prod_{i=1}^{n} [\ 1 - R_i(t)\ ] \qquad \text{(Eqn. 14)}$$

where: $Rp(t)$ = reliability for the parallel configuration

$R_i(t)$ = reliability of individual block in parallel

n = number of blocks in parallel

A simple technique for addressing the series-parallel system is to section each major subsystem into parallel sections and series sections. The reliability of each section is calculated by using Eqn. 13 or Eqn. 14. This reduces the problem into an equivalent configuration of series blocks in which each block represents a section. The overall system can then be calculated using Eqn. 13.

Failure Mode, Effects and Criticality Analyses

The approach taken toward analyzing potential failures in the propulsion system was to look at each of the major subsystems individually, i.e., heat source system, power generating system and thruster system. These systems are

Reproduced with permission of the copyright owner. Further reproduction prohibited without permission.

shown in Figures 5, 6 and 7 respectively. Each major component shown on the system diagrams was analyzed for probable failure mode, cause, effects of failure and indications of failure as sensed by the installed system sensors. The criticality of the component failure to the overall success of the mission was also analyzed. Figure 11 provides a description of criticality and severity levels as developed by the U.S. Department of Defense [75] and widely used throughout industry. Appendix C.3 contains estimates of criticality levels for Severity Levels I (Catastrophic) and II (Critical) based on reliability calculations. These estimates indicate that a catastrophic failure resulting in loss of the entire propulsion system is extremely unlikely (Criticality Level E), with a probability of 0.005%. A critical failure resulting in loss of the normal propulsion system is estimated to be at the occasional level (Criticality Level C), with a probability of 1.68%.

Component Reliability Calculations

Calculations for reliability of all major components were accomplished, based on the failure rate data, the estimated operation times for each component for the specified mission period and the mission profile as outlined in Section I. The results of the calculations are summarized and tabulated in Appendix C.1.

Reproduced with permission of the copyright owner. Further reproduction prohibited without permission.

Figure 11. Description of Criticality Analysis Levels

Levels of Criticality

Level A: Frequent
A high probability of occurrence during the mission (greater than 20% of overall probability of failure).

Level B: Reasonably Probable
A moderate probability of occurrence during the mission (between 10% and 20% of the overall probability of failure).

Level C: Occasional
An occasional probability of occurrence during the mission (between 1% and 10% of the overall probability of failure).

Level D: Remote
An unlikely probability of occurrence during the mission (between 1% and 0.1% of the overall probability of failure).

Level E: Extremely Unlikely
A failure whose probability is essentially zero during the mission (less than 0.1% of the overall probability of failure).

Levels of Severity

Level I: Catastrophic
Failure results in loss of the entire propulsion system.

Level II: Critical
Failure results in major system loss, with significant impact on meeting system and mission requirements. Mission likely to be aborted as a result of failure at this level.

Level III: Marginal
Failure results in minor system damage, or loss of minor subsystem or component. Mission likely to be continued with some reduction in capability as a result of a failure at this level.

Level IV: Negligible
Failure results in negligible impact on propulsion system, and no impact on meeting all mission requirements.

Reproduced with permission of the copyright owner. Further reproduction prohibited without permission.

System Reliability Calculations

Reliability block diagrams were developed for each of the three major subsystem and are provided in Appendix C. Equations 13 and 14 were applied to the appropriate sections of these diagrams and the resulting probability calculated for each of the subsystems. These subsystems are combined from a functional reliability aspect into three major groups (R1, R2, R3). Total propulsion system reliability was then calculated by using the series configuration relationship of Eqn. 13 for the three major groups. A reliability block diagram was also developed for the normal propulsion mode and is provided in Appendix C.2.5.

Preliminary results of system reliability calculations indicated that the system reliability requirements would not be met by the system as initially configured, primarily due to the extremely high failure rate of the injector valves in the heat source system. This failure rate data was obtained directly from the system manufacturer and represents data obtained during early testing of a prototype system. Data on subsequent improvements was not available. To meet system reliability requirements for the ALMA-1 propulsion system, redundant injector valves were incorporated. As shown in Appendix C, overall propulsion system reliability is greater than 0.99, and approximately 0.96 in the normal propulsion mode. The probability of a critical failure resulting in loss of the normal propulsion system is estimated to be 1.68%.

Reproduced with permission of the copyright owner. Further reproduction prohibited without permission.

Summary

The conceptual propulsion system consists of a heat source system with a metallic fuel, a power generating system using redundant closed Brayton cycle gas turbines, a thruster system using redundant electric motors and screw propellers and a knowledge-based management system.

The PPM management system uses the data from 79 system sensors to monitor the operation of the propulsion plant. Data is classified with respect to status. Abnormal status conditions are processed through a rule-based hierarchy of over 200 rules to arrive at a diagnosis and determine the appropriate corrective action. Propulsion plant mode and power contexts are used to establish baseline conditions for normal or abnormal conditions for sensed parameters.

Preliminary reliability calculations indicated that the established requirements for propulsion system reliability would not be met due to a very low reliability level reported for the oxidant injectors valves in the heat source system. The use of redundant injector valves was relied upon to increase system reliability to the required levels for the specified mission duration. As shown in the calculations of Appendix C, reliability of the overall propulsion system is in excess of 0.99 and reliability in the normal propulsion mode is slightly greater than 0.96. The probability of a critical failure of the normal propulsion system during a mission is estimated to be 1.68%.

Reproduced with permission of the copyright owner. Further reproduction prohibited without permission.

V. SIMULATION

Introduction

The design of a propulsion system which is managed autonomously by a knowledge-based system, as is the case with the ALMA-1 concept, requires special consideration relative to the final phases of evaluation and presentation, as listed in Table 12. The evaluation of the effectiveness of the PPM management system to accomplish its assigned functions of monitoring, diagnosing, predicting, controlling and data management is accomplished through the use of PPM-SIM, a simulation program developed as part of this research. PPM-SIM is an interactive program written in Common Lisp which simulates the sensors in the ALMA-1 design and provides the user with the capability to enter simulated sensor values. The output of PPM-SIM incorporates the results of the monitoring, diagnostic, and control processes of PPM and the manipulation of the PPM data base in response to both the user input and the results of actions taken by the Diagnostic and Control systems. Due to the lack of a time-based development system to support this research, the PPM Prediction system as planned is currently not included in PPM-SIM. An attempt has been made to include limited predictive capabilities in the simulation which are not time dependent. In some cases the user is queried for additional sensor data to validate predictions.

Reproduced with permission of the copyright owner. Further reproduction prohibited without permission.

Objectives

The objectives of PPM-SIM include the following:

(1) Simulate the design features of each system and each component of the ALMA-1 propulsion system to the extent feasible in order to support validation of the design.

(2) Simulate the operation of the PPM Monitoring, Diagnostic, Control and Data systems to evaluate the effectiveness of the knowledge-based system in managing the operation of the propulsion plant in an autonomous manner.

(3) Provide a basis for evaluating the impact of a knowledge-based system on the conceptual design.

(4) Provide the capability for accomplishing Phase 7 of the engineering design process (see Table 12) in the presentation of the selected design concept.

Scope

The scope of PPM-SIM includes the simulation of all systems, components and sensors associated with the ALMA-1 design with the exception of the PPM Prediction system. The simulation is restricted to the Propulsion state, and does not include the Battery Charging State or the Restart State (see Figure 9). Within the Propulsion State, all contexts and modes are simulated, except for the Reduced Normal mode. Hence, a total of five power-mode contexts are included in the PPM-SIM program and its associated data base. The following information summarizes the significant items included in PPM-SIM for each of the major hardware systems.

Reproduced with permission of the copyright owner. Further reproduction prohibited without permission.

Heat Source System.

For the Heat Source System (see Figure 5), which includes the Fuel and Product System, the Oxidant System and the Startup System, PPM-SIM includes:

(1) a set of 22 sensors, supported by a data base with a design value, a simulated value and a status for each sensor in each of 5 power-mode contexts;

(2) a knowledge base with 3 primary rules, 13 major rules and 45 verification rules.

Power Generating System.

For the Power Generating System (see Figure 6), which includes the Normal Power Generating System and the Backup Power Generating System, PPM-SIM includes:

(1) a set of 32 sensors, supported by a data base with a design value, a simulated value and a status for each sensor in each of 5 power-mode contexts;

(2) a knowledge base with 2 primary rules, 22 major rules and 71 verification rules.

Thruster System.

For the Thruster System (see Figure 7), which includes the Main Thruster System, the Hovering Thruster System and the Auxiliary Thruster System, PPM-SIM includes:

(1) a set of 25 sensors, supported by a data base with a design value, a simulated value and a status for each sensor in each of 5 power-mode contexts;

(2) a knowledge base with 3 primary rules, 18 major rules and 69 verification rules.

Reproduced with permission of the copyright owner. Further reproduction prohibited without permission.

Operation

User Interface.

The operation of PPM-SIM is controlled by the user in an interactive mode to provide a user input in the following areas:

(1) Mission Phase. The following selections are available:

1. Normal Transit Phase
2. Normal Search Phase
3. Normal Positioning Phase
4. Emergency-Full Transit Phase
5. Emergency-Minimum Transit Phase

Once the phase is selected by the user, PPM-SIM will enter the design values for sensors as their simulated values, and a GREEN status as the status for each sensor.

(2) Sensor Simulation. 79 sensors are available.

(3) Sensor Value. Any value can be selected and entered.

(4) Followup Data. In some cases where PPM-SIM cannot adequately verify the cause of an anomaly, the user is queried for a followup response after the PPM-SIM action is taken in order to validate any changing sensor values and evaluate the correctness of the action.

(5) Status Printout. The user is queried regarding his/her desires for a printout of current status information.

(6) Continuation/Termination. The user is asked to input his/her desires to continue or terminate the simulation session, and whether to continue with the existing simulated phase and sensor values or to start the next simulation with

Reproduced with permission of the copyright owner. Further reproduction prohibited without permission.

different conditions.

Data Representation and Management

One of the major tasks of PPM-SIM is to maintain current and accurate data for the following parameters:

(1) Mission Phase: 5 alternatives are available.

(2) Mode Context: 2 alternatives are available.

(3) Power Context: 3 alternatives are available.

(4) Sensor Design Value: 5 alternatives are available for each sensor, 1 for each power-mode combination.

(5) Sensor Status: 4 alternatives are available for each sensor -- GREEN, RED, YELLOW and OOC. In addition, the RED and YELLOW status are further classified as HIGH or LOW for those sensors which have values other than OPEN and SHUT (i.e., other than switch and valve positions).

(6) System Status: 3 alternatives are avaliable for each of 10 systems -- IN-OPERATION, IN-STANDBY and OOC.

In addition to the above data, PPM-SIM maintains current lists of various parameters used in the monitoring and diagnostic processes. These lists include:

(1) a list of user entered simulated sensor values;

(2) a list of sensors with alarm conditions;

(3) a list of sensors, components, or systems which have been evaluated as no longer operable and are placed on an "out of commission" list.

Another type of data used in PPM-SIM is data to establish limits for the GREEN, RED, or YELLOW status condition. These are included within various classification

Reproduced with permission of the copyright owner. Further reproduction prohibited without permission.

rules, and are established for each type of sensor. In actual practice, these limits would usually be established for each individual sensor. The use of sensor types in this case was made strictly as a convenience and for program simplification.

For sensor data and system status data, use is made of a frame system to input, store and retrieve data. Frames are essentially generalized property lists used to store properties of an item. In a Common Lisp implementation, frames are represented as nested association lists. The general format of a frame could be represented by the following Lisp structure:

```
(frame name (slot 1 (facet 1 value 1 value 2 ... value n)
                    (facet 2 value 1 value 2 ... value n)
                    (.....................................)
                    (facet n value 1 value 2 ... value n))
            ( ........................................))
            (slot n (facet 1 value 1 value 2 ... value n)))
```

In the PPM representation, the following scheme is used for sensor frames:

(1) frame name: system (e.g., fp-sys, ox-sys)

(2) slots: sensor designation (e.g., T1a)

(3) facets: dvalue (design value), svalue (simulated value) and status

(4) value: the value(s) assigned to the facet

A similar represenation is used for system status:

(1) frame name: system

(2) slots: entire-system or component

(3) facets: status

Reproduced with permission of the copyright owner. Further reproduction prohibited without permission.

(4) value: in-operation, in-standby, or ooc.

At the beginning of the simulation, when the user selects the desired mission phase, PPM-SIM establishes the mode and power contexts for the selected phase and assigns design values to all of the sensor and system frame facets. It then assigns these same values as initial simulation values under the "svalue" facet value. When the user enters his/her own simulated values, PPM-SIM removes the existing simulated values from the frame and enters the newly simulated values. When the user has completed his initial data entry, PPM-SIM evaluates the data, classifies the status and commences diagnosis of alarm conditions. Status values in the frames are updated as necessary. The control action developed as a result of diagnosis is also used to modify frame data as appropriate. For example, an action to shut down the normal power generating system and shift to the backup power generating system results in changing all frame data from the simulated normal mode to an emergency mode, with the design values for the emergency mode used as the initial simulated values.

Knowledge Representation.

Types of Rules. The rules in PPM-SIM can be grouped into two general classes: classification rules and diagnostic/action rules. The classification rules monitor changes is sensor readings and determine if a change in status (GREEN, YELLOW, RED, OOC) has occurred. If a change has occurred, it is classified by the rules and sent to the

Reproduced with permission of the copyright owner. Further reproduction prohibited without permission.

diagnostic/action group of rules. The diagnostic/action rules are broken down into a hierarchy of three levels: a primary rule set, major rule sets and individual verification rules. Appendix E contains logic statements extracted from these rules for each of the three major knowledge bases. A brief description of the rule hierarchy follows:

(1) Primary Rules. A primary rule set is established for each of the 8 propulsion plant sub-systems. The applicable primary rule set is triggered by the classification rules based on the abnormal status and the designation of the sensor with the abnormal status. The primary rule set uses the abnormal sensor status to make a preliminary evaluation of the abnormal condition and trigger the appropriate set of major rules for verification of the diagnosis and determination of the corrective action.

(2) Major Rules. Under each set of primary rules are several sets of major rules which process the preliminary evaluation made by the primary rule through verification rules contained within the major rule set. The major rules are established by the nature of the potential failure (e.g., reactor leak, low tank level, low oxidant flow).

(3) Verification Rules. Within each major rule set are several verification rules which verify the preliminary evaluation through various "IF-THEN" logic statements. The verification rules provide the following:

CAUSE: the diagnosed cause of the anomaly;

Reproduced with permission of the copyright owner. Further reproduction prohibited without permission.

VERIFIED BY: the data used to verify the diagnosis;

ACTION: the action taken in response to the anomaly.

These logic statements for each of the three major knowledge bases can be found in Appendix E. They have been obtained by parsing the rules, and clarification comments added.

Example. To illustrate the operation of the PPM-SIM knowledge base, the example of a low oxidant flow sensed by sensor FM2 is used. The diagnostic and action rules for the oxidant system are contained in the heat source system knowledge base in file "kb-hss". It is assumed that the cause of the low flow is a clogged injector valve, CV2a, and that all other sensor status conditions at this time are normal (GREEN status). When the user enters an abnormally low value for the oxidant flow, the following sequence of actions are initiated by the rule base:

(1) Function "classify-sim-list": based on the sensor designation of FM2, this function calls functions "classify-flow" and "classify-sim-status" to classify the status of the simulated value.

(2) Function "classify-flow": this function provides the knowledge with respect to limits for each status classification. For an oxidant flow of less than 80% of the design value for the power-mode context, it classifies the status of sensor FM2 as "LOW-RED".

(3) Function "classify-sim-status": this function takes the action to change the status of sensor FM2 in the data base to LOW-RED and place FM2 on the red-list of

Reproduced with permission of the copyright owner. Further reproduction prohibited without permission.

abnormal sensor data for further processing by the diagnostic/action rule hierarchy.

(4) Function "get-rules": this function, which processes all of the alarm conditions which have been placed on the red-list, determines from the sensor designation (FM2) that an alarm condition exists in the oxidant system and initiates the diagnostic action by calling upon function "get-ox-rules", which is a primary rule for the oxidant system.

(5) Function "get-ox-rules": this primary rule gets an input of LOW-RED status for sensor FM2 and invokes the next level of diagnostic rules to verify the existence of a low flow and to determine the cause and response. In this case, "get-ox-rules" calls on function "take-action-low-ox-flow", which is a major rule for the oxidant system.

(6) Function "take-action-low-ox-flow": this major rule gets an input of the LOW-RED status for sensor FM2 and processes it through its embedded verification rules to combine this knowledge with knowledge of the status of other sensors, which is in the data base at the time, in order to establish the cause of the apparent low flow and determine the appropriate action. If the injector valve positions and oxidant pressures are classified as having a GREEN status at this time, the verification rule applies this knowledge to evaluate the situation as a probable clogged injector valve. It invokes function "shift-to-next-injector" to take the action in response to this diagnosis.

Reproduced with permission of the copyright owner. Further reproduction prohibited without permission.

(7) Function "shift-to-next-injector": this function is part of the action rule hierarchy, and is used to determine the status of all injector valves and to shift from the current valve to the next valve in a predetermined sequence. The clogged valve is shut and placed on the out of commission list (ooc-list). If all five injector valves become inoperable, this function places the entire oxidant system and the normal power generating system on the ooc-list and shifts propulsion to the emergency-full context.

The operation of the diagnostic and action rules for other systems in the Heat Source System knowledge base, as well as for other systems in the Power Generating System knowledge base or the Thruster System knowledge base, is identical to that described in the example above.

Reproduced with permission of the copyright owner. Further reproduction prohibited without permission.

VI. CONCLUSIONS AND RECOMMENDATIONS

Introduction

The design of underwater vehicles over the past two decades has evolved in the direction of increased automation and less human presence. This evolution has led to the development of working prototypes of unmanned, untethered underwater vehicles, often referred to as Autonomous Underwater Vehicles, or AUVs. These vehicles use knowledge based sytems based on artificial intelligence techniques for vehicle control. Advances in microprocessors and in intelligent systems have resulted in significant advances in AUV technology and capability over the past decade.

AUVs are now at the threshold of advancing from short duration missions of 6 to 10 hours maximum to missions of several days. The limiting factor in achieving this increased endurance is the lack of energy systems to support such missions. This research effort has investigated this problem and has proposed a conceptual design for an AUV propulsion system to support a one-week mission. Reliability considerations have been foremost in the development of this design. The effectiveness of the management system in monitoring system operation, diagnosing abnormal conditions and initiating corrective actions in response to abnormal conditons has been demonstrated by a simulation system developed as a part of this research.

Reproduced with permission of the copyright owner. Further reproduction prohibited without permission.

Discussion of Results

Characteristics of the Design Concept.

A summary of the characteristics of the proposed propulsion plant is given in Figure 12. The arrangement of the ALMA-1 propulsion system is shown on Figure 13.

Results vs. Requirements

The ALMA-1 conceptual design provides a realistic, achievable concept for extending the endurance of AUVs using current technology. It meets the basic mission requirement to operate continuously and reliably with reasonable efficiency for a one-week period in accordance with the established mission profile. The design provides a power capablity approximately 19% over the design value for full power operation at 10 knots, and a fuel/oxidant capacity which is 20% over the calculated values for the mission profile. Hence, a reasonable amount of over-design capacity has been incorporated.

The design concept provides for operation independent of the atmosphere and independent of depth. No exhaust or reaction products are required to be discharged from the AUV during operation, which eliminates the necessity for a variable ballast system to compensate for any discharge. The propulsion system, including normal and backup energy systems, is estimated to be less than 40% of vehicle displacement and less than 40% of vehicle volume. System reliability in the normal mode is estimated to be 96.1%. When the emergency mode is considered, the overall system

Reproduced with permission of the copyright owner. Further reproduction prohibited without permission.

Figure 12. Summary of Characteristics of the ALMA-1 Propulsion Plant Concept

VEHICLE CHARACTERISTICS

Length, overall	32 ft
Hull Diameter	4 ft
Displacement	19,838 lb
Design Speed	10 kt
Endurance (for Design Mission Profile)	1 week

HEAT SOURCE SYSTEM CHARACTERISTICS

Fuel	Liquid Lithium (54 ft^3, 1505 lb)
Oxidant	Sulfur-Hexaflouride (65 ft^3, 3960 lb)
Design Bulk Temperature, Reactor	1650 F
Combustor Efficiency	90 %
Design Reactor Heat Loss	10 %
Effective Heat of Reaction	3.85 kw-hr/kg SF6
Total Available Energy (Design)	6929 kw-hr
Maximum Heat Transfer Rate	117 kw
Design Heat Transfer Rate	98 kw

NORMAL POWER GENERATING SYSTEM CHARACTERISTICS

Type	Closed Brayton Cycle
Working Fluid	Argon
Turbine Inlet Temperature	1500 F
Maximum Working Fluid Press (Full Power)	60.5 psia
System Thermal Efficiency	29.9 %
Maximum Power Output	35 kw
Design Power Output (Full Power)	29.4 kw

BACKUP POWER GENERATING SYSTEM CHARACTERISTICS

Type	Ni-H2 Secondary Battery
Capacity	20 kw-hr
Cycle Life	10,000 cycles
Efficiency	70 %

THRUSTER SYSTEM

Motors	240 v, AC, brushless, reversible, oil-filled, pressure compensated
Controllers	invert 240 v DC to 3-phase AC, provide speed regulation and commutation
Main Thruster Motor	15 hp, 900 rpm, 688 lb thrust
Aux Thruster Motors	1 hp, 1200 rpm, 70 lb thrust
Hov Thruster Motors	1 hp, 1200 rpm, 70 lb thrust

PROPULSION PLANT MANAGEMENT SYSTEM

Type	knowledge-based system using rules and frames
Rules	approximately 300
Sensors	79 sensors in 8 major systems
Power Contexts	Full, Medium, Minimum
Mode Contexts	Normal, Reduced Normal, Emergency

Reproduced with permission of the copyright owner. Further reproduction prohibited without permission.

Reproduced with permission of the copyright owner. Further reproduction prohibited without permission.

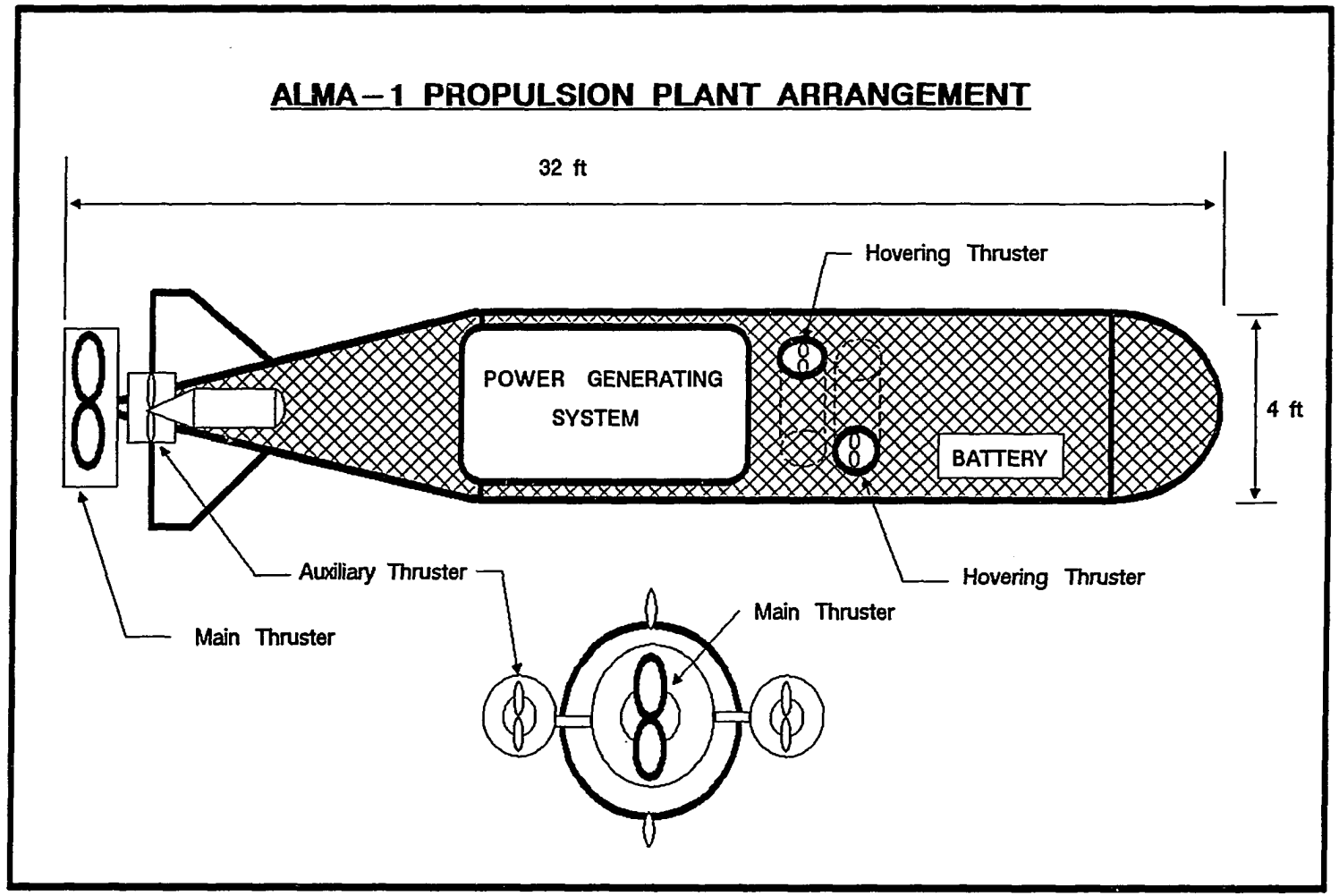

Figure 13. ALMA-1 Propulsion Plant Arrangement

reliability is estimated to be in excess of 99%. The probability of a critical failure which would result in a loss of the normal propulsion system during a misssion is estimated to be 1.68%. Operation of the PPM-SIM simulator indicates excellent compatibility between the proposed propulsion plant and the PPM management system for managing its operation.

Design Strong Points

The proposed design is considered to have the following major strong points:

(1) High Reliability. Despite the current lack of an injector valve with reasonable reliability, the overall system reliability in the normal propulsion mode was able to be raised to 96% through the use of redundant injectors. Redundancy of components is used throughout the design where feasible and where considered most effective in improving reliability of the propulsion plant or its management system. A concerted effort was made throughout the design process to minimize the potential for a mission failure due to the malfunction of a single component.

(2) Simplicity. The proposed concept uses available technology to provide for a relatively simple system with a minimum of components. A good example is the heat source system, where the reactor vessel serves not only as a combustion chamber, but also serves as a storage tank for the lithium fuel and the reaction products. Hence, the need for separate piping, valves, pumps and storage tanks is

Reproduced with permission of the copyright owner. Further reproduction prohibited without permission.

eliminated, reducing system weight and volume and enhancing system reliability. The heat source heat exchanger, which is shown on the system diagram as being inside the reactor vessel, would actually be constructed of circumferential tubes in contact with the outer diameter of the reactor vessel. This type of design would not only reduce the reactor vessel size requirements, but would provide for additional reliability by removing the heat exchanger from a potentially corrosive environment of reaction products.

(3) Independence of Atmosphere and Depth. The proposed concept provides an independence from depth and from the atmosphere that is second to none. This advantage also has the beneficial effect of adding to the simplicity and reliability of the total vehicle design, in that no variable ballasting system is required to compensate for discharge of exhaust products. All reaction products are liquids with a higher density than the lithium fuel and remain at the bottom of the reactor vessel until removed during the post-mission refueling.

(4) Adaptability to Automation. The inherent simplicity of the proposed concept enhances its adaptability for use in autonomous applications. Power level changes require only a minimum of control action, namely, a change in mass flow of the working fluid and the oxidant. Mass flow of the working fluid is changed through the use of an accumulator to control the total mass of working fluid circulating through the system, while regulator valves are used to regulate the

Reproduced with permission of the copyright owner. Further reproduction prohibited without permission.

flow of oxidant. Monitoring and diagnosis of system operation are readily accomplished through a sensor system using standard sensors.

Design Weak Points

(1) Potential for Injector Failure. Injectors used to date in prototype systems using Li-SF_6 have shown a high tendency to clog. Although design improvements have been made in this area, no supporting data could be located. Since the proposed design is based on existing components and existing data, the use of redundant injectors appeared to be the only viable alternative in meeting reliability requirements.

(2) Restart Difficulty. In the event that the normal power generating system is shut down for an extended period of time such that the lithium is cooled below its melting point of 354 F, restart of the system becomes difficult. A chemical restart system is included, which can inject a hypergolic fluid into the lithium to cause an exothermic reaction and melt the lithium. In addition, electric heaters are installed to heat a portion of the lithium above its melting point, which would then permit the oxidant to be injected and complete the melting process. The backup power system has been sized to accommodate the use of electric heaters for this use. The control of this process adds to design complexity, and the loss of propulsion power during the restart period is an undesirable aspect.

Impact of Knowledge-Based System

The development of the knowledge-based PPM system to

Reproduced with permission of the copyright owner. Further reproduction prohibited without permission.

manage the operation of the propulsion plant was accomplished concurrently with the propulsion plant design. The interaction between the parallel design efforts appeared to be mutually beneficial to both efforts in developing a total system design to meet autonomous operating requirements.

Some of the impacts of incorporating a knowledge-based system into the design, as well as the impacts of designing a system for operating autonomously, are discussed below.

(1) Potential Fault Identification. While the standard reliability techniques were useful early in the design phase to identify potential reliability problems, these techniques were somewhat limited in identifying potential integrated system faults and indications of faults. Standard reliability calculations appeared to be inadequate in assessing how a potential fault may be characterized with respect to data derived from installed sensors. As in any propulsion system, there is a strong interrelationship among all subsystems. A single fault in one component in one subsystem will very likely have an impact on operating parameters in other subsystems. These interrelationships were not fully appreciated until the knowledge base was being developed. In some cases it led to the installation of additional sensors to insure a more complete and more accurate representation of system conditions. In other cases it led to the installation of redundant components, where reliability calculations, in themselves, did not

Reproduced with permission of the copyright owner. Further reproduction prohibited without permission.

indicate the need. In essence, the development of a knowledge-based system to identify and diagnose faults led to a more thorough investigation of system interfaces and interrelationships and to an improved design.

(2) Fault Response. The ability to respond rapidly and accurately to system faults is essential for insuring that an autonomous vehicle can complete its assigned mission in an effective manner with a minimum of disruption. The lack of a trained human operator to assess abnormal conditions and to initiate immediate corrective action places a burden on the developer of the knowledge-based system to fully understand the capabilities and limitations of systems. While the response to an anomaly identified by sensors must be rapid, it must also be a graduated response whenever possible so that the least impacting action that can resolve the anomaly will be taken before more severe measures are initiated. The incorporation of a predictor system, for example, could anticipate developing faults through a trend of changing sensor values and possibly initiate preventive action to preclude reaching alarm conditions where more drastic action may be necessary. While a predictor system was not able to be fully included in the PPM-SIM simulation system, it has been included within the PPM concept.

In responding to a probable fault, alternative responses must be available not only within the management system design, but also within the design of the propulsion plant subsystems. In the design of the proposed propulsion

Reproduced with permission of the copyright owner. Further reproduction prohibited without permission.

plant concept, consideration was made to be able to respond rapidly to diagnosed faults with the least impacting action. The various propulsion modes and contexts were developed with this type of response in mind. In addition, the sensor system was designed to support evaluation of the effectiveness of the initial response to a diagnosed fault. The incorporation of redundant components, while primarily initiated as a result of reliability analyses, was influenced by the need for providing alternative system lineups in support of the graduated response concept.

Conclusions

The following conclusions are made as a result of this research:

(1) Existing AUVs rely almost entirely upon secondary batteries as an energy source, which limits these vehicles to missions of less than approximately 10 hours.

(2) Current trends in developing AUV technology indicate that the development and application of suitable energy sources may be the most limiting factor in improving the endurance of AUVs in the near future.

(3) While many factors must be considered in the selection of systems and components for use in a long range AUV propulsion plant, the factor of reliability under autonomous operating conditions appears to be a prime consideration in any future design.

Reproduced with permission of the copyright owner. Further reproduction prohibited without permission.

(4) The use of a nuclear reactor heat source with a heat engine appears to be the optimum selection for use in a large, long range AUV. Non-technical considerations will probably preclude the use of nuclear reactors on unmanned vehicles in the near future, requiring the development of alternative systems to meet this need.

(5) A closed Brayton cycle heat engine used with a lithium-sulfur hexafluoride chemical heat source appears to offer considerable promise for near term application to powering long range AUVs.

(6) Thruster systems using external pressure-compensated electric thruster motors and shrouded screw propellers appear to be an optimum choice for the AUV application.

(7) The development of an effective knowledge base is one of the more difficult aspects to consider in the design and application of intelligent systems.

(8) While a wide variety of expert systems building systems have been developed over the past two decades, only a limited number of them deal with the factor of time, and very few systems are available to support the developement of real-time knowledge-based systems.

(9) The use of simulation tools is essential in evaluating systems being developed for use on autonomnous vehicles.

(10) The PPM-SIM simulation program developed as a part of this research has been useful in identifying potential design problems within the propulsion plant concept, as well as in improving overall system reliability and capability in

Reproduced with permission of the copyright owner. Further reproduction prohibited without permission.

responding to system anomalies.

(11) The ALMA-1 propulsion system concept developed in this research offers several advantages with respect to reliability, simplicity, operability and adaptability to automation which suggest that the development of a system based on this concept could provide the basis for a viable alternative for future long range AUV application.

Future Investigations

The following areas are recommended for future investigation into the design of propulsion systems for long range AUV applications:

(1) The use of low pressure, low temperature nuclear reactor systems, such as the AMPS system developed in Canada [28, 29,30], appears to be a reasonable compromise between the demands of efficiency and safety, and warrants further consideration for future AUV applications.

(2) Recent developments in solid polymer electrolyte fuel cells [12] indicate promise for future applications. Weight and space requirements for fuel and fuel tanks need to be improved to increase the competitiveness of these systems.

(3) Fuel storage requirements are a major limiting condition for all non-nuclear candidates for energy systems in long range AUV applications. Recent advances [96] in the development of an "artificial gill" to extract oxygen from sea water offer promise for future systems, particularly fuel cell systems. Innovative fuel storage techniques which reduce storage tank weight and volume, such as the gaseous

Reproduced with permission of the copyright owner. Further reproduction prohibited without permission.

toroidal (GST) system developed by Maritalia [97,98] which uses a toroidal hull structure to store gaseous oxygen for a closed cycle Diesel system, should be explored in conjunction with AUV propulsion system development.

(4) The reliability of injector valves in Li-SF_6 metallic fuel heat source systems appears to be a limiting factor for long range AUV considerations. Design improvements are needed in the injector design to improve system reliability.

(5) The use of a time-based development system is highly recommended for developing a real-time knowledge-based system for managing AUV propulsion systems. A time-based predictor system should be incorporated within the design and in the system simulator.

Reproduced with permission of the copyright owner. Further reproduction prohibited without permission.

LIST OF REFERENCES

Reproduced with permission of the copyright owner. Further reproduction prohibited without permission.

[1] Busby, F., Undersea Vehicles Directory - 1987, Busby Associates, Arlington,VA, 1987.

[2] Underwater Power Sources - A Review of Current Needs and Availability, UEG Publication UR32, London, 1985.

[3] Niksa, M.J. and Wheeler, D.J., Aluminum-Air Batteries for Remote Applications, ELTECH Systems Corp., Fairport Harbor, OH, 1987.

[4] Fraas, A.P., Engineering Evaluation of Energy Systems, McGraw-Hill, NY, 1982.

[5] Specht, S., Advanced Batteries for Electrically Powered Underwater Vehicles, Gould, Inc., Chardon, Ohio, 1987.

[6] Blurton, K.F. and Sammels, A.F., "Metal/Air Batteries: Their Status and Potential - A Review", Journal of Power Sources, 4, pp 263-279, 1979.

[7] Brodd, R.J., "Advanced Batteries", Chemtech, pp 612-621, Oct 1985.

[8] National Academy of Sciences, Energy Systems of Extended Endurance in the 1 - 100 Kilowatt Range for Undersea Applications, NAS Publication 1702, 1968.

[9] Urbach, H.B., Knauss, D.T. and Quandt, E.R., "Advanced Concepts in Chemical Propulsion Systems for a 500-Ton Submersible", Naval Eng Journal, pp.63-75, Feb 1981.

[10] Lynn, D.K., et.al., Los Alamos National Laboratory, "Acid Fuel Cell Technologies for Vehicular Power Plants", Proceedings of 17th IECEC, pp 663-666, 1982.

[11] Patel, D.N., Leo, A., Tobias, L., and Voyentzie, P., Energy Research Corp, "Assessment of Phosphoric Acid and Trifluoromethane Sulfonic Acid Fuel Cells for Vehicular Powerplants", Proceedings of 17th IECEC, pp 301-307, 1982.

[12] Long Endurance Autonomous Undersea Vehicle Fuel Cell/Energy System, Hamilton Standard Div, United Technologies Corp., prepared for DARPA, Oct 1987.

[13] Oman, H., Energy Systems Engineering Handbook, Prentice-Hall, Inc., Englewood Cliffs, NJ, 1986.

[14] Reynolds, W.C., Thermodynamics, McGraw-Hill, NY, 1965.

[15] Saad, M.A., Thermodynamics for Engineers, Prentice-Hall, Inc, Englewood Cliffs, NJ, 1966.

Reproduced with permission of the copyright owner. Further reproduction prohibited without permission.

[16] Hall, N.A. and Ibele, W.E., Engineering Thermodynamics, Prentice-Hall, Inc., Englewood Cliffs, NJ, 1960.

[17] Thompson, R.V., "Marine Technology - Present and Future", Proc. of the Inst. of Mech. Engrs., 199:A2, pp.73-93, 1985.

[18] Burnham,J.B., Guiliani,M.H. and Moeller,D.J., "Development, Installation and Operating Results of a Steam Injection System (STIG) in a General Electric LM5000 Gas Generator", Trans of ASME, Jour. of Eng. for Gas Turbines and Power, pp.257-262, July 1987.

[19] Davidson, P.G. and Gray, D.C., Black and Veatch, "Gas Turbines Could Meet Demands of Hesitant Utilities", Power, pp.33-36, Jan 1987.

[20] Duvall, G.D., "Operational Evaluation of a Closed Brayton Cycle Laboratory Engine", David W. Taylor NSRDC, Annapolis, MD, Proceedings of 11th IECEC, pp 171-176, 1976.

[21] Johnson, R., Leonard, L., Aspenes, J., Merritt, R. and Malosh, J., Univ. of Alaska, "Try to Avoid Multiple Units for Remote Diesel Operation", Power, pp.43-44, Jan 1987.

[22] Thompson, R.V. and Fowler, A., "Development of a Depth Independent Closed Cycle Diesel Engine", OTC 4031, Proc. of the Offshore Technology Conference, pp.211-222, 1981.

[23] Nilsson, H. and Bratt, C., "An Air Independent Stirling Energy System for Autonomous ROVs", United Stirling AB, Proc. of 5th International Symposium on Unmanned Untethered Submersible Technology, UNH, Durham, NH, pp.102-107, 1987.

[24] Nightingale, N.P., The Automotive Stirling Engine, MOD II Design Report, Stirling Engine Systems Division, MTI, Latham NY, prepared for NASA-Lewis Research Center, Cleveland, OH, Report No. NASA CR-175106, Oct. 1986.

[25] Reader, G.T., "The Marine Stirling Engine", Proc. of 17th IECEC, pp.1732-1737, 1982.

[26] Wimmer, R.E., North American Rockwell Corp., "Comparative Evaluation of Power System Types for Undersea Applications", Proc. 6th Annual Conf. on Marine Technology, pp.1389-1399, 1970.

Reproduced with permission of the copyright owner. Further reproduction prohibited without permission.

[27] Tilliette,Z.P., "Advances in Defining a Closed Brayton Cycle Conversion System for Future ARIANE5 Space Nuclear Power Applications", Trans. ASME, Jour. of Eng. for Gas Turbines and Power, pp.92-98, Jan 1987.

[28] MacDonald, A.G. and Kastner, G.A., ECS Energy Conversion Systems, Inc., "AMPS - A Small Nuclear Reactor Based Autonomous Marine Power Source for Sub-Sea Vehicle Applications", Proc. of 4th International Symposium on Unmanned Untethered Submersible Technology, UNH, Durham, NH, pp.344-357, 1985.

[29] Hewitt, J.S., "The AMPS 1.5 MW Low Pressure Compact Reactor", ECS Power Systems, Inc., First Int'l Seminar on Small and Medium Sized Nuclear Reactors, Lausanne, Switzerland, Aug 1987.

[30] Kidd, C.M., ECS Power Systems, Inc., "The Ocean Shuttle Submersible, Its Autonomous Marine Power Source (AMPS) and Power Source Control System", Proc. of 5th Int. Symposium on Unmanned Untethered Submersible Technology, UNH, Durham, NH, pp.89-101, 1987.

[31] Blood, H.L. and Maynard, E.D., Jr., Naval Ocean Systems Center, "Torpedo Technology in the 1980's", Oceans 81 Conference Record, Vol. 1, pp. 78-82, 1981.

[32] Principles of Naval Architecture, SNAME, 1967.

[33] Mavor, J.W., Froelich, H.E., Marquet,W.M. and Rainnie, W.O., "Alvin, 6000-Ft. Submergence Research Vehicle", SNAME Transactions, Nov 1966.

[34] Maloof, R.H., Forrester, N.C. and Albrecht, C.E., "A Brushless Electric Propulsion System for the Research Submersible Alvin", presented at Oceans 86, MTS, Washington, D.C., Sept 1986.

[35] Waterman, D.A., A Guide to Expert Systems, Reading, MA, Addison-Wesley, 1986.

[36] Hayes-Roth, F., Waterman,D.A. and Lanat,D.,(eds.), Building Expert Systems, Reading, MA, Addison-Wesley, 1983.

[37] Allen, J.F., "Maintaining Knowledge About Temporal Intervals", Communications of the ACM, 26:11, pp.832-843, Nov.1983.

[38] Siemens,R.W., Golden, M. and Ferguson, J.C., "STARPLAN II: Evaluation of an Expert System", Proceedings AAAI-86, pp.844-850, Aug 1986.

Reproduced with permission of the copyright owner. Further reproduction prohibited without permission.

[39] Shortliffe, E.H., Computer-Based Medical Consultation: MYCIN, American Elsevier, NY, 1976.

[40] van Melle, W., "A Domain-Independent Production Rule System for Consultation Programs", IJCAI 6, 1979.

[41] van Melle, W., Shortliffe, E.H. and Buchanan, B.G., "EMYCIN: A Domain-Independent System That Aids in Constructing Knowledge-Based Consultation Programs", Machine Intelligence, Infotech State of the Art Report 9, No.3, 1981.

[42] Kunz, J., et.al., A Physiological Rule-Based System for Interpreting Pulmonary Function Test Results, Heuristic Programming Project Report No.HPP-78-19, Computer Science Dept, Stanford University, 1978.

[43] Freiherr, G., The Seeds of Artificial Intelligence, NIH No.80-2071, SUMEX-AIM, Washington, DC, 1980.

[44] Davis, R., Buchanan, B.G. and Shortliffe, E., "Production Rules as a Representation for a Knowledge Based Consultation Program",AI 8:15-45, 1977.

[45] Duda, R.O., et.al., Development fo the PROSPECTOR Consultation System for Mineral Exploration, Final Report SRI Projects 5821 and 6415, AI Center, SRI International, Menlo Park, CA, 1978.

[46] Weiss, S.M., et.al., "A Model-Based Consultation System for the Long-Term Management of Glaucoma", IJCAI 5, pp.826-832, 1977.

[47] Weiss, S.M. and Kulikowski, C.A., "EXPERT: A System for Developing Consultation Models", IJCAI 6, pp.942-947, 1979.

[48] Pople, H.E.,Jr., Myers, J.D. and Miller, R.A., "DIALOG: A Model of Diagnostic Logic for Internal Medicine", IJCAI 4, pp.848-855, 1975.

[49] Szolovits, P. and Parker, S., "Categorical and Probabalistic Reasoning in Medical Diagnosis", AI Journal 11, pp.115-154, 1978.

[50] Chandrasekaran, B., Gomez, F., Mittal, S., and Smith, J.W., "An Approach to Medical Diagnosis Based on Conceptual Structures", IJCAI-79, 1979.

[51] Brown, J.S., Burton, R.R. and Bell, A.G., SOPHIE: A Sophisticated Instructional Environment for Teaching Electronic Troubleshooting, Bolt, Beranek and Newman Report No.2790, Cambridge, MA, 1974.

Reproduced with permission of the copyright owner. Further reproduction prohibited without permission.

[52] Tanner, M.C. and Bylander, T., "Application of the CSRL Language to the Design of Expert Diagnosis Systems: The AUTO-MECH Experience", Ohio State Univ. Artificial Intelligence in Maintenance: Proceedings of the Joint Services Workshop, pp.131-151, June 1984.

[53] Shubin, H., "IDT: An Intelligent Diagnostic Tool", DEC, AAAI-82 Proceedings, 1982.

[54] Bonissone, P.P. and Johnson, H.E., Jr., "DELTA: An Expert System for Diesel Electric Locomotive Repair", Artificial Intelligence in Maintenance: Proceedings of the Joint Services Workshop, June 1984.

[55] Miller, F.D., et.al., "The ACE Experiment: Initial Evaluation of an Expert System for Preventive Maintenance", Artificial Intelligence in Maintenance: Proceedings of the Joint Services Workshop, June 1984.

[56] Nelson, W.R., "REACTOR: An Expert System for Diagnosis and Treatment of Nuclear Reactor Accidents", AAAI-82, pp.296-301, Aug 1982.

[57] Antonelli, D.R., "The Application of Artificial Intelligence to a Maintenance and Diagnostic Information System", Artificial Intelligence in Maintenance: Proceedings of the Joint Services Workshop, pp.451-480, June 1984.

[58] Laffey, T.J., Perkins, W.A. and Firschein, O., "LES: A Model-Based Expert System for Electronic Maintenance", Artificial Intelligence in Maintenance: Proceedings of the Joint Services Workshop, June 1984.

[59] Fagan, L.M., VM: Representing Time-Dependent Relations in a Medical Setting, Ph.D. Dissertation, Computer Science Dept., Stanford Univ., 1980.

[60] Fagan, L.M., Kunz, J.C. and Feigenbaum, E.A., "Representation of Dynamic Clinical Knowledge: Measurement Interpretation in the Intensive Care Unit", IJCAI-79, pp.260-262, 1979.

[61] Underwood, W.E., "A CSA Model-Based Nuclear Power Plant Consultant", AAAI-82, pp.302-305, 1982.

[62] Pazzani, M.J., "Refining the Knowledge Base of a Diagnostic Expert System: An Application of Failure-Driven Learning", AAAI-86, pp.1029-1035, Aug.1986.

[63] Malkoff, D.B., Real-Time Fault Detection and Diagnoses: The Use of Learning Expert Systems to Handle the Timing of Events, NPRDC TR 87-8, Naval Personnel R & D Center, San Diego, CA, Nov 1986.

Reproduced with permission of the copyright owner. Further reproduction prohibited without permission.

[64] Sedor, G., "PPM: A Conceptual Framework for an AUV Propulsion Plant Manager", Proc. 5th Intl. Symposium on Unmanned Untethered Submersible Technology, Durham, NH, June 1987, pp 515-538.

[65] Blidberg D.R. and Chappell, S.G., "Guidance and Control Architecture for the EAVE Vehicle", IEEE Journal of Oceanic Engineering, Vol.OE-11, No.4, 449-461, Oct 1986.

[66] Davis, D.B., "Artificial Intelligence Goes to Work", High Technology, pp.16-25, April 1987.

[67] PICON - A Real-Time Expert System, Product Summary, LISP Machine, Inc., 1986.

[68] The Knowledge Engineering Environment, Intellicorp, Knowledge Systems Division, 1984.

[69] Clayton, B.D., ART Programming Primer, Inference Corporation, Dec 1985.

[70] Generic Expert System Tool, Georgia Tech Research Institute, Artificial Intelligence Branch, 1986.

[71] Wolfe, A., "An Easier Way to Build a Real-Time Expert System", Electronics, pp.71-73, March 5, 1987.

[72] Faught, W.S., "Applications of AI in Engineering", Computer, IEEE, July 1986).

[73] Sadlon, R.J., Analysis Techniques for Mechanical Reliability, NPS-1, IIT Research Institure, prepared for Reliability Analysis Center, Rome Air Development Center, Fall 1985.

[74] Arno, R.G., Nonelectronic Parts Reliability Data, NPRD-2, IIT Research Institute, prepared for Reliability Analysis Center, Rome Air Development Center, Summer 1981.

[75] Procedures for Performing a Failure Mode, Effects and Criticality Analysis (MIL-STD-1629A), Department of Defense, Washington, D.C., Nov 1980.

[76] Schweizer, P.F., Westinghouse R & D Center, "Knowledge-Based Management of Failures in Autonomous Systems", 5th Int. Symp. on Unmanned Untethered Submersible Technology, pp 539-551, Durham, NH, June 1987.

Reproduced with permission of the copyright owner. Further reproduction prohibited without permission.

[77] Pooch, U.W., Williams, G.N. and Safford, D.R., Texas A&M Univ., "Reliability Design of a Distributed Knowledge Based System for an Autonomous Underwater Vehicle", 5th Int. Symp. on Unmanned Untethered Submersible Technology, pp 552-560, Durham, NH, June 1987.

[78] Asimov, M., Introduction to Design, Prentice-Hall, Inc., Englewood Cliffs, NJ, 1962.

[79] Wilson, W.E., Concepts of Engineering System Design, McGraw-Hill Co., NY, 1965.

[80] Buhl, H.R., Creative Engineering Design, Iowa State University Press, Ames, Iowa, 1960.

[81] Alger, J.R.M. and Hays, C.V., Creative Synthesis in Design, Prentice-Hall, Englewood Cliffs, NJ, 1964.

[82] Kepner, C.H. and Tregoe, B.B., The Rational Manager, Kepner-Tregoe, Inc., Princeton, NJ, 1976.

[83] Larsen, R.J. and Marx, M.L., An Introduction to Mathmatical Statistics and Its Applications, Prentice-Hall, Englewood Cliffs, NJ, 1986.

[84] Henly, E.J. and Kumamoto, H., Designing for Reliability and Safety Control, Prentice-Hall, Englewood Cliffs, NJ, 1985.

[85] Hillenbrand, C., Autonomous Underwater Vehicle (AUV) Primary and Hovering Propulsion Systems Conceptual Design, Naval Underwater Systems Center, Newport, RI, Technical Memorandum TM No. 87-2101, 16 Nov 1987.

[86] Watanabe, T., et.al., "50 KW Stirling Engine", Proceedings of 17th IECEC, pp.1813-1818, 1982.

[87] Martini, W.R., "Whence Stirling Engines", Proceedings of 17th IECEC, pp.1669-1674, 1982.

[88] Department of Marine Engineering, University of Newcastle upon Tyne, Sub-Sea Power Generation - Feasibility Analysis, Newcastle, England, 8 Feb 1979.

[89] CRC Handbook of Chemistry and Physics, 65th Edition, 1984-1985, Weast, R.C., editor-in-chief, CRC Press, Boca Raton, FL, 1984.

[90] Groff, E.G. and Faeth, G.M., Pennsylvania State Univ., "Steady Metal Combustor as a Closed Thermal Energy Source", J. Hydronautics, Vol.12, No.2,pp 51-58, April 1978.

Reproduced with permission of the copyright owner. Further reproduction prohibited without permission.

[91] van der Sluys, W.L.N., Phillips Research Laboratories, Eindhoven, Netherlands, "A Lithium/Sodium/Sulphur-hexaflouride Heat Source in Combination with a Sterling Engine as a Propulsion System for Small Submersibles", IECEC 75 Proceedings, pp 1031-1037, 1975.

[92] Labak, S.J., Feasibility Study of Various Propulsion Plants for Small Unmanned Submersibles, MS Thesis, MIT/C.S. Draper Laboratory, Cambridge, MA, May 1986.

[93] Chemical Engineers' Handbook, 5th edition, McGraw-Hill, NY, 1973.

[94] Harper, N., Private Communication, Garrett Division, Allied-Signal Aerospace Corp., Tempe, AZ, Aug 1988.

[95] Hoerner, S.F., Fluid-Dynamic Drag, published by the author, 1965.

[96] Carnevale, S., "Integration of an Artificial Gill with a Fuel Cell", AUVS-88 Proceedings, San Diego, CA, June 1988.

[97] Compton-Hall, R., "Revolutionising the Submarine", Jane's Defence Weekly, London, 13 August 1986.

[98] Compton-Hall, R., "A Pipe Dream for Submariners", U.S. Naval Institute Proceedings, Annapolis, MD, pp 104-106, January 1989.

[99] Winston, P.H. and Horn, B.K.L., LISP, second edition, Addison-Wesley, Reading, MA, 1984.

Reproduced with permission of the copyright owner. Further reproduction prohibited without permission.

APPENDIX A. ENERGY SYSTEMS

Reproduced with permission of the copyright owner. Further reproduction prohibited without permission.

A.1. Review of Energy Systems

Direct Conversion Systems.

Electrical Storage Batteries. Electrical storage batteries can be classified as either primary or secondary storage batteries. The more common battery is the secondary battery. It is distinguished from a primary battery by the fact that it can be electrically recharged. A secondary storage battery consists of one or more cells, each having a positive electrode, a negative electrode, an electrolyte surrounding the electrodes and an external electrical circuit. The cells are arranged in a manner such that they can accept charging current from a DC power supply via the external circuit or deliver DC power to the external circuit when discharging. The chemical reaction between the electrolyte and the electrodes results in an electron flow in the electrolyte and an electrical potential between the electrodes. The cells are electrically reversible.

A primary battery is similarly composed of electrodes, an electrolyte and an external circuit. The cells, however, are not electrically reversible. The anode of a primary battery is consumed during power generation and the battery can be recharged only by mechanical means (i.e., replacement of the anode). Air or oxygen is generally supplied to a primary cell. The cathode reaction is usually an oxygen reduction using an air or oxygen depolarized electrode. Electrolytes vary, but can be an alkaline solution, a neutral saline solution, or an oxidant such as hydrogen peroxide. Primary batteries require the use of auxiliary equipment such as pumps and heat exchangers. In general, primary batteries operate more like fuel cells than batteries [3].

Storage batteries have properties which make them very attractive for underwater applications --- they are highly reliable and are extremely quiet. They also have limitations which detract from their ability to power long range underwater vehicles --- they are extremely heavy in comparison to the power or energy they can provide, and their endurance is very limited.

In measuring battery performance, several types of criteria appear in the literature. For secondary batteries, three types of efficiencies are used [4]:

(1) Coulombic Efficiency: ratio of amp-hr output to input.
(2) Voltaic Efficiency: ratio of volts discharged to charged.
(3) Energy Efficiency: product of above efficiencies.

Reproduced with permission of the copyright owner. Further reproduction prohibited without permission.

Storage battery charge and discharge rates affect efficiency ratings. As the rates increase, current flow increases. This causes an increase in internal resistance losses and a reduction in output voltage during discharge, as well as an increase in voltage input required for charging. Energy efficiency for secondary batteries in on the order of 70%.

Another measure of storage battery performance compares energy or power capacity with weight. Specific energy (w-hr/kg) and specific power (w/kg) ratings for storage batteries are among the lowest of all energy sources. Primary batteries under development have made significant improvements over secondary batteries in this area, but are still relatively heavy with respect to power and energy produced. This is a very important consideration in the design of underwater vehicles. Of all the primary batteries currently available, the aluminum-air battery appears to offer the most promise, based on relatively higher power and energy densities and lower costs [3,5,6,7]. For secondary batteries, the nickel-hydrogen battery, which uses a sintered nickel cathode and a platinum anode, offers a higher power density (0.300 kw/kg) than other secondary batteries, as well as a significant increase in cycle life (10,000 cycles, vs 800 cycles for lead-acid). It is considered a likely replacement for nickel-cadmium batteries in spacecraft applications [7]. Of particular interest to the AUV application is its high tolerance for overcharge and undercharge, and good low temperature performance. Cost appears to be a major drawback at this time.

Fuel Cells. The concept of fuel cells goes back to 1839, when W. Grove found that an electric current could be generated by bubbling hydrogen and oxygen over two platinum electrodes in a sulfuric acid bath [4]. Up until the past two decades, fuel cells have seen limited application due to relatively high costs and limited life. The space program has provided recent impetus for more developmental efforts in this area.

Fuel cells basically consist of a pair of electrodes separated by an electrolyte, much like a storage battery. However, the electrolyte in a fuel cell does not conduct electrons, but ions. The electrolyte may be either acid or alkaline. In a cell with an acid electrolyte in which hydrogen and oxygen are used as fuels, gaseous hydrogen supplied to the anode is ionized and releases electrons to an external circuit. The hydrogen ions migrate to the cathode, which is supplied with gaseous oxygen. The oxygen is ionized by the electron flow in the external circuit. The oxygen and hydrogen ions react to form water. If an alkaline electrolyte is used, the operation is similar except that hydroxyl ions migrate from cathode to anode [4].

Reproduced with permission of the copyright owner. Further reproduction prohibited without permission.

Although the concept of a fuel cell is simple in principle, the system and its operation can be complicated in practice. Fuel cells tend to suffer substantial losses in cell voltage output as a result of polarization of the electrodes and microscopic irregularities in surface chemistry. In addition, there are resistive losses in the cell which produce heat which, in turn, requires the addition of a cooling system. The polarization and resistive losses increase with reaction rate or current output.

Oxygen for fuel cell use can be stored as a compressed gas, a cryogenic liquid or in a decomposable compound such as hydrogen peroxide. For use on a vehicle where weight and space considerations are important, cryogenic oxygen has an advantage. Liquid oxygen, which is all oxygen, has a density of 71.3 lb/cu.ft., while 90% hydrogen peroxide contains 44.4 lb/cu.ft. of oxygen. Compressed gaseous oxygen, in addition to presenting safety problems, requires the use of heavy storage tanks. The hydrogen fuel can be stored as a solid or liquid compound or as a gas. Nitrogen compounds of hydrogen, such as ammonia and hydrazine, have been used as hydrogen sources for fuel cells. However, these sources require a separate decomposer or reformer, which adds to the system weight and complexity and produces an additional byproduct (e.g., carbon dioxide or nitrogen) which must either be stored or discharged, again adding to system weight and complexity. In addition, hydrazine has a stability problem at higher concentrations.

The use of cryogenic liquid hydrogen, at 4.4 lb /cu.ft., appears to be advantageous for underwater vehicles with respect to system volume. Offsetting this advantage is the added complexity of cryogenic storage and handling. The continuous boiling off of cryogenic fuels must also be taken into consideration. If the vehicle's mission includes periods where it is relatively inert, cryogenic fuel may have to be vented off without providing useful energy.

With respect to the type of electrolyte, the alkaline electrolyte appeared to be favored over the acid electrolyte on earlier fuel cells, based on power-weight ratios, efficiency and usage data. For example, a 67 kw alkaline fuel cell developed by United Technologies Co. for a Lockheed submersible has a power-weight ratio of 0.252 kw/kg, while phosphoric acid fuel cells developed by United Technologies have power-weight ratios of 0.072 kw/kg [9,10]. However, more recent acid cells using a new type of electrolyte involving a solid polymer are currently under development which offer the potential for significant improvements in specific power, endurance and reliability. A current development effort directed at vehicular power plants is focusing on the use of a methanol fuel with acid

Reproduced with permission of the copyright owner. Further reproduction prohibited without permission.

fuel cells for automobiles [10]. Significant weight reductions appear to be feasible with the use of Solid Polymer Electrolytes (SPE) in an acid fuel cell. For a nominal 20 kw plant (74 kw peak power), the projected power-weight ratio for the SPE cell using methanol is 0.483 kw/kg [10]. This compares favorably against fuel cells of the same size and intended applications, but using phosphoric acid or trifluoromethane sulfonic acid electrolytes. For the latter cells, researchers indicate that power-weight ratios would be 0.088 kw/kg and 0.093 kw/kg respectively [11].

For H_2-O_2 fuel cells, most manufacturers claim efficiencies on the order of 55% for alkaline cells and 45% to 51% for acid cells, with both operating at full power. However, these efficiencies may not account for overall power plant losses, such as those associated with reforming, pumping, cooling, etc. When these losses are counted in, the overall efficiency for producing electricity from the chemical energy in a liquid hydrocarbon fuel has been estimated to be less than 25% by some developers [4]. An acid SPE fuel cell using gaseous H_2 and O_2 developed by Hamilton Standard has an efficiency of 51%, according to the developers [12].

Life expectancy data for fuel cell stacks indicates that operating times of 500 hours to 2000 hours can be expected. Current development efforts related to automobile power sources indicate that operating times of 5000 hours can be expected [10]. Technical problems which affect reliability and performance of fuel cells include: warping and cracking of thin, brittle plates under thermal stresses, internal shorts, electrolyte leakage and resistance increases. The use of solid polymer electrolytes appears to have eliminated many of these problems and contributed to significant improvements in cell reliability. A solid polymer cell at Hamilton Standard has operated for over 80,000 hours with a mean-time-between-failures greater than 5000 hours [12]. The sensitivity of fuel cell performance to microscopic impurities in the oxygen is extremely high. For example, oxygen with 99.991% purity causes a voltage dip under continuous operation in about half the time as a cell with oxygen purity of 99.995% [4]. The need for frequent purging of contaminant gases in a fuel cell presents an additional design consideration for AUV use.

Thermal Conversion Systems.

Chemical energy systems in which stored chemical energy is converted into thermal energy, such as in the combustion of a fuel, and then into electrical or mechanical energy by a thermal conversion device, such as a heat engine, are now examined. We start with a basic description of various heat engines and the thermodynamic cycles which

Reproduced with permission of the copyright owner. Further reproduction prohibited without permission.

have commonly been used with these heat engines, and then review thermal energy sources. In some cases, such as internal combustion engines, the thermal energy source and thermal conversion device are contained in the same unit.

Heat Engines.

Steam Engines. The steam engine using a Rankine cycle was one of the first applications of a thermodynamic cycle to be used extensively to produce power. The Rankine cycle was originally invented by Watt and then subsequently formally delineated by Prof. W.J.M. Rankine. The working fluid of the cycle is a pressurized gas (usually steam) which is generated by boiling a liquid with heat in a boiler or steam generator and then expanded through a piston engine or turbine to generate power. The heat source, which can be a nuclear reactor, is commonly the combustion of a fossil fuel in a chemical energy system. The heat sink is normally a condenser which is maintained at a low pressure and condenses the expanded steam to a liquid, which is recirculated back to the boiler to complete the closed cycle.

The efficiency of the Rankine cycle used with a steam turbine is limited by the maximum permissible turbine inlet temperature (about 1100 F), a metallurgical consideration. Large power plants (up to about 1100 mw) utilize energy-conserving refinements to improve overall plant thermal efficiency, many of which would not be practical for small plants. These refinements include feedwater heating with steam extracted from the turbine, superheating, reheating and use of exhaust gas heat extractors, or economizers. Superheating increases the peak cycle temperature for a given boiler pressure, while reheating provides a higher average operating temperature. Regenerative feed heating, in which vapor is extracted from the turbine during expansion to heat the condensate, increases efficiency by reducing the boiler heat input required per pound of steam. This is done at the cost of some reduction in output per pound of steam entering the turbine [4]. The best efficiency achieved in a large steam plant using these refinements is about 40% [13].

Further improvements in efficiency can be achieved through the use of combined cycles in large power plants. Efficiencies of over 50% are being achieved in co-generation plants where a steam turbine operating on a Rankine cycle uses steam generated in an unfired boiler, which is heated by the exhaust of a gas turbine operating on a Brayton cycle [13]. Another variation of this concept is the binary vapor cycle, in which two fluids are used in the two cycles. Mercury-steam binary plants have been designed with efficiencies approaching 50% [14]. In water moderated

Reproduced with permission of the copyright owner. Further reproduction prohibited without permission.

nuclear reactor plants, where superheating is not practicable, the maximum working fluid temperature is limited to the critical temperature of water (706 F). Efficiencies of these plants have been under 30%. For power plants in the power range of interest which use dry saturated steam, expected efficiencies are on the order of 17% - 19% [4].

At one time it appeared that vapor cycles (i.e., Rankine) would be the standard cycles for providing a power source for space vehicles, but gas turbines using the Brayton cycle appear to be favored at this time. One of the major reasons is attributed to the higher degree of reliability associated with the use of an inert working fluid, as is commonly done in gas turbine cycles [14]. With respect to power-weight ratios, very little information is available in the literature for steam plants in sizes being considered for relatively small submersible vehicles. However, for plants designed to operate for periods in excess of 100 hours, the steam plant has a higher specific weight (i.e., lower power-weight ratio) than fuel cells, gas turbines, Stirling engines and Diesel engines [8].

Gas Turbines. The essential elements of a modern gas turbine engine are a rotating air compressor, a combustion chamber in which burning fuel combines with and heats the compressed air, and a turbine which extracts power by expanding the heated air and combustion products. While air is the most common working fluid in a gas turbine cycle, the use of inert gases for closed cycles is becoming more common. The output power of a gas turbine is taken from a rotating shaft that may drive a generator or other equipment. In the case of a jet engine, the output power is derived from the thrust of the high velocity exhaust. Compressor power requirements generally vary from 40% to 80% of the power output of the turbine. This is in marked contrast to the steam plant Rankine cycle, where about 1% to 2% of the output power is used for feed pump power [15].

Modern gas turbine power plants use the ideal Brayton cycle as a thermodynamic model [16]. The Brayton cycle is very sensitive to irreversibilities in the form of work process efficiencies. Hence, compressor and turbine efficiencies have a significant impact on overall plant efficiency. In comparison to the Otto or Diesel cycles with the same output, the Brayton cycle has a much larger volume flow of working fluid. Hence, the flow and mechanical losses are higher in a Brayton cycle. In general, the Brayton cycle is better for steady flow devices [16].

Brayton cycles used with gas turbines may be either open or closed cycles. The open cycle, in which the ambient atmosphere is generally used to supply the working fluid (air) and to receive the expanded turbine exhaust, is much

Reproduced with permission of the copyright owner. Further reproduction prohibited without permission.

simpler, less expensive and has less weight than a comparable closed cycle. Closed cycles require the use of large and heavy heat exchangers, whose cost is commonly several times that of the gas turbine-compressor unit. However, the closed cycle offers many significant advantages over the open cycle [4], such as improved part-load efficiency, insensitivity to dirty fuels, higher Reynolds number which improves turbine efficiency, and the ability to use a more efficient high molecular weight inert gas. In an underwater vehicle application, where it is necessary to eliminate any dependence on the atmosphere and where depth independent operation is desired, the closed cycle provides some additional advantages.

Gas turbine efficiency is limited by the temperature that the first row of turbine blades can withstand, as well as component efficiencies. A considerable amount of developmental effort aimed at efficiency improvement has gone into the design of gas turbines over the past two decades, especially in the design of turbine blades and components. These efforts, such as the use of internal cooling and ceramic surfaces, have permitted increases in turbine inlet temperatures of about 10 degrees C per year in recent years [17]. Turbine inlet temperatures in the vicinity of 2200 F have been reported in recent literature.

Other techniques to improve thermal efficiency include the use of regenerators to recover waste heat in the turbine exhaust, intercoolers between compressor sections and the use of reheat cycles. Intercooling and reheat are usually used in large plants and in conjunction with regeneration. Intercooling between compressor stages reduces the compressor work requirement, while reheat between turbine stages increases the work output per unit mass for a given compressor pressure ratio and turbine inlet temperature. However, the theoretical thermal efficiency of a Brayton cycle with intercooling and/or reheat without regeneration can be lower than a simple Brayton cycle, since the intercooling and reheat are added to the simple cycle at lower pressure ratios. If the simple cycle is operating at the optimum pressure ratio, these "added cycles" would be at pressure ratios which represent lower thermal efficiencies. When regeneration is added, thermal efficiencies are increased. The amount of regeneration is largest at low pressure ratios, and units have been built in which more than 90% of the possible regeneration effect has been obtained. Since the lower pressure ratios make it easier to build compressors and turbines with higher efficiencies, regeneration becomes a highly attractive method for improving efficiencies [14].

Another technique used to increase thermal efficiencies of large gas turbine power plants is that of injecting steam into the turbine. Recent testing of a GE LM5000 engine

Reproduced with permission of the copyright owner. Further reproduction prohibited without permission.

demonstrated that the addition of a steam injection system (STIG) increased the output power of the turbine from 29.9 mw to 41.9 mw while thermal efficiency was increased from 36.0% to 41.8%, with the turbine inlet temperature remaining at 2112 F [18].

Among the advantages that have been attributed to gas turbine power plants are the following [17,19] :

(1) Capability to operate with different fuels
(2) Simple in construction
(3) Easy to maintain
(4) Low specific weight and specific volume
(5) Ability to handle large volumes of gas
(6) Minimum requirements for external auxiliary systems
(7) Low vibration levels
(8) Installation flexibility due to low weight and size
(9) Ease of automation
(10) Good reliability and availability

Disadvantages of gas turbines include the following :

(1) Relatively high fuel consumption
(2) Sensitivity to fuel contamination (open cycle)
(3) Poor part load performance
(4) Reversing difficulties
(5) Large volume associated with heat exchangers

Some of the disadvantages of gas turbines listed above have been minimized in recent designs. Part load performance has been improved by using variable geometry turbine guide vanes. The use of intercoolers and regenerators, along with a closed cycle, can also improve the part load performance. Reversing difficulties, which may be important for an underwater vehicle application, can be addressed through such methods as using a controllable pitch propeller or by using electric propulsion motors. The sensitivity of the turbine to fuel contamination is eliminated by using a closed cycle with an inert gas [17]. A more compact engine design has been developed by the Navy for underwater applications which reduces heat exchanger volumes based on NASA experience. The heat exchangers are closely positioned around the turbocompressor and power is extracted via an axial shaft at the compressor end [20]. This horizontal arrangement is particularly well suited to naval vehicle designs.

Diesel Engines. The Diesel cycle was invented by Rudolph Diesel in 1893 with the objective of using coal as a fuel. In the Diesel cycle, air in the cylinder is compressed during the upstroke of a piston, increasing its temperature. Fuel injected into the cylinder at this time is ignited due to the elevated temperature. Fuel injection continues during part of the downstroke and is then cut off as the mixture of air and combustion products expands to do work prior to being exhausted from the cylinder. In an

Reproduced with permission of the copyright owner. Further reproduction prohibited without permission.

ideal Diesel cycle, compression and expansion occur isentropically, heat is added at a constant pressure and rejected at a constant volume. An ideal Otto cycle, which is the model for gasoline engines, is very similar except that the heat addition occurs in a constant volume process. The modern Diesel engine actually follows an Otto cycle more closely than a Diesel cycle [4].

Diesel engines have been used in a wide variety of applications, and are popular today for their relatively good reliability and a fuel oil to mechanical power efficiency that can approach 50%. For small engines in the 100 kw range, efficiencies are usually in the range of 32% to 37%. It is generally considered that the Diesel engine has been developed to the point where additional efficiency improvements may be very difficult to achieve [13]. Some recent developmental efforts have been directed at the use of ceramics for the surfaces of valves, pistons and cylinders to support higher temperature operation. It has been estimated that over 50% engine efficiency can be obtained in small high-speed engines in this manner [13]. Part load efficiencies of Diesel systems are much less than full load. Most high-speed Diesel engines cannot be operated for prolonged periods at much less than 40% to 60% of full load without suffering from mechanical failures [21].

Some of the advantages attributed to Diesel engines include relatively low fuel consumption, good reliability, considerable experience in development and application. The disadvantages include a relatively high noise level, poor part-load performance and relatively poor power-weight ratio. Another disadvantage from the point of view of a potential application on an underwater vehicle is the fact that, of all the heat engines considered in this study, the Diesel engine is unique in that it does not provide a practical means for converting chemical energy into thermal energy outside of the engine itself (i.e., external boiler or combustion chamber). This fact makes it difficult to adapt the Diesel to a closed cycle.

A noteworthy effort to develop a depth-independent closed cycle Diesel system for an underwater vehicle is that of researchers at the Univeristy of Newcastle upon Tyne, England [17,22]. The system recirculates a constant mass of trapped nitrogen as its working fluid and chemically scrubs the carbon dioxide from the exhaust with a potassium hydroxide (KOH) adsorbent. Replenishment oxygen is stored in gaseous form and mixed with the scrubbed exhaust before entering the engine. Microprocessor controls are used for controlling various plant parameters. Extensive simulation trials were conducted for this system prior to actual development and test of a hardware system. A commercially available 100 kw Perkins engine with direct injection was

Reproduced with permission of the copyright owner. Further reproduction prohibited without permission.

selected for the prototype. Preliminary reports indicate satisfactory operation at 60% output, and pointed out the need for additional work on control of the oxygen supply system.

Stirling Engines. The Stirling engine, invented by Rev. Robert Stirling in 1816, works on one of the few thermodynamic cycles limited only by Carnot efficiency [13]. The ideal Stirling cycle consists of four reversible processes --- two isothermal (compression and expansion) and two isometric (heating and cooling). Its theoretical efficiency is the best possible of all cycles, but in practice the Stirling engine has not yet demonstrated any improvement in thermal efficiency over other cycles. The cycle normally uses two pistons which operate 90 degrees out of phase in the same or adjacent cylinders, one working in a hot region and one in a cold region. The working fluid is sealed in the engine, and is usually an inert gas such as helium. Heat is added or removed through a regenerative heat exchanger built into the engine.

Many engines operating on the Stirling cycle have been built. Generally, they have been notable for their quiet operation and their ability to convert any heat power into mechanical power, using a wide variety of fuels. However, because they must operate at relatively slow speeds to provide time for heat transfer, they have generally been heavy, bulky and expensive in comparison with other types of engines of the same power output [4].

For an actual Stirling engine, the factor causing the greatest departure from an ideal cycle is that the piston motion and phasing of the heat transfer process do not yield the ideal isothermal or isometric processes. Actual thermal efficiency is significantly degraded by frictional losses, particularly in the piston rod seals and piston rings. Work per cycle is small unless high pressures are used. Since the volumetric compression is small, this means high pressures throughout the cycle, which makes the engine heavier and larger than a Diesel engine of the same output. Operating speeds are generally about one-quarter of those for internal combustion engines in order to mimimize pumping power losses. Peak temperatures are limited by materials in the heater, with about 1300 F about maximum. Since cylinder walls must be kept below about 300 F, substantial heat losses to the cylinder walls occur [4].

One of the most significant developmental efforts involving the application of Stirling engines to underwater vehicles is that of United Stirling AB of Malmo, Sweden and the Royal Swedish Navy [23]. This effort includes the development of a 75 kw engine for use in a manned submarine. A chemical heat source involving high pressure oxygen

Reproduced with permission of the copyright owner. Further reproduction prohibited without permission.

combustion of a petroleum distillate is used. Although the proposed system is independent of the atmosphere, it is depth independent only to a depth of about 300 meters since it discharges exhaust gases overboard. For greater depths, an exhaust gas compressor will be added.

Developmental efforts to improve the performance of Stirling engines have identified problems which degrade reliability at higher performance levels. Early Stirling engines were generally regarded as highly reliable, but had low performance with respect to specific power and efficiency. Higher performance requirements have led to higher temperatures, pressures and engine speeds which, in turn, have led to reduced reliability. Sliding seals and heaters have been identified as the major problem areas in efforts to improve Stirling reliability [13]. Piston-rod seals which retain the high pressure working fluid have been a particular problem with respect to reliability considerations.

Another recent development effort to improve the performance of Stirling engines is being sponsored by the U.S. Department of Energy and managed by NASA-Lewis Research Center [24]. The objective of this program is to develop an automotive engine that provides a 30% improvement in fuel economy relative to a comparable spark-ignition engine. The work is being done by a team of engineers from Material Technology Incorporated (MTI) and United Stirling AB. The MOD II engine developed under this program has a maximum power rating of 78.6 kw (105.4 hp) and has demonstrated an efficiency range of 28.2% (full load) to 38.5% (at 30 kw). Fuel consumption in a 1985 Chevrolet was 41 mi/gal overall, as compared to 31 mi/gal for a comparable spark-ignition engine. Endurance and reliability, which are high priority factors for a submersible vehicle energy source, are listed as lower priority items under this program.

Heat Sources

Thermal Energy Storage (TES). Thermal energy storage devices may be considered to be the thermal equivalent of storage batteries. In theory, any material that can accept and retain thermal energy for a sufficiently long period can be used as the storage medium. Materials such as carbon have been used for this application. The thermal energy is generally applied to the storage material through electric heaters prior to placing the system in operation. Some systems use thermal energy from nuclear reactors or solar collectors for storage. The thermal energy can be stored in the form of sensible heat, where the temperature of the storage medium (e.g., carbon block) will decrease as energy is extracted. Energy can also be stored as latent heat, where a phase change material (e.g., molten salt) is used

Reproduced with permission of the copyright owner. Further reproduction prohibited without permission.

which does not undergo a significant decrease in temperature over the major part of its operating range.

A development effort in which a molten salt TES system was combined with a Stirling engine provided some favorable results [25]. In this effort a 500 kg system using LiF/MgF2 Eutectic salt storage, 102 kw-hr of energy were produced at a temperature range suitable for Stirling engines (600 C - 800 C), with a specific energy density of 0.204 kw-hr/kg. The literature indicates that an endurance of eight times that of an equivalent battery-electric system is available with this system.

A sensible heat storage system using a carbon block and a Brayton closed cycle gas turbine was recently evaluated by an industrial research group [94], and projected a specific energy density comparable to that of the lithium-fluoride latent heat storage system (approximately 0.1 - 0.2 kw-hr/kg). However, endurance of heat storage systems at the required power levels appears to be marginal.

Nuclear Sources. Nuclear energy is a source of thermal energy which can be provided by nuclear reactors or by radioactive isotopes. Power producing nuclear reactors contain fissionable material in the form of an oxide of enriched uranium. When a thermal neutron induces fission in a uranium (U-235) atom, thermal energy is produced from the kinetic energy of the fission products and the radiation from these products as they decay into stable elements. This thermal energy is transferred to a coolant, either water or a gas, which flows through the reactor and then converted into mechanical or electrical energy through an energy conversion device.

Nuclear reactors are usually classified by the nature of the coolant which flows through the reactor. Three major types are in use today --- pressurized water reactors, boiling water reactors and gas cooled reactors. Reactors which use a liquid metal coolant have also been developed, but have not been used extensively. All nuclear reactors used on U.S. Navy submarines are of the pressurized water type, in which the thermal energy absorbed by the high pressure coolant water is transferred to a secondary system with water at a lower pressure, causing the secondary water to boil in a steam generator unit. The steam generated in the secondary system is used in a steam turbine Rankine cycle to generate mechanical and electrical energy. In boiling water reactors, the steam is generated directly in the reactor. In gas cooled reactors, an inert gas such as helium is used to transfer the heat from the reactor to steam generators. In all three types of plants, a steam plant operating on a Rankine cycle is the most commonly used energy conversion system. Since it has not been practicable

Reproduced with permission of the copyright owner. Further reproduction prohibited without permission.

to superheat the steam generated by a nuclear reactor, all plants operate on saturated steam. The highest efficiencies reported for nuclear reactor plants is around 30% for pressurized water and boiling water reactor plants, and about 39% for gas cooled plants [13].

Radioisotope sources provide thermal energy from the radioactive decay of unstable isotopes, such a cobalt-60 and strontium-90. Power levels available from radioisotopes have generally been limited to less than 1 kw. The literature suggests that practical problems will limit active interest in isotope systems to power levels below about 10 kw electric output delivered [26], which would eliminate them from active consideration as a primary power source for the specified vehicle. The weight of shielding material appears to be a significant drawback for its potential application to a submersible vehicle.

Nuclear sources offer several distinct advantages for underwater vehicle power systems:

(1) Endurance: for both nuclear reactors and radioisotope sources, endurance ranges are measured in years;
(2) Reliability;
(3) No external high pressure or cryogenic fuel storage needed;
(4) No exhaust products.

Some of the disadvantages include heavy weights due to shielding requirements, various safety issues and maintenance complicated by radioactivity considerations.

At power levels of interest (30-50 kw), nuclear sources have generally not been applied. Radioisotope sources used to date have been well below this level, and projections for systems now under development have been below about 15 kw. On the other hand, nuclear reactors developed to date have generally been in the megawatt range. A nuclear reactor system currently under development to support the Europen ARIANE space program is based on a 200 kw system in which a lithium coolant is used to transfer heat to a helium-xenon working gas using a closed Brayton cycle gas turbine [27]. The key factors given for this selection include endurance and reliability.

AMPS, the first civilian nuclear reactor power source designed specifically for subsea applications, is currently under development in Canada [28,29,30]. It is based on the SLOWPOKE reactor, which has had over 20 years of experience in Canada. The AMPS system is an autonomous power source for a small, manned submersible vehicle using a non-pressurized, light-water moderated reactor with a maximum temperature of 95 C. To accommodate the relatively low temperatures, a Rankine cycle using a refrigerant working fluid will be

Reproduced with permission of the copyright owner. Further reproduction prohibited without permission.

used. The anticipated net power source efficiency is 9.5%, which results in about 100 kw net electric power from a reactor producing approximately 1.5 mw thermal. The prototype plant is scheduled to be completed in 1988, and go to sea on a small manned submarine in 1990. Projected endurance is 1300 full-power-days between refuelings. Current plans include the application of this system to a multi-purpose Ocean Shuttle vehicle capable of under-ice operations [30].

Chemical Sources. Two basic types of chemical sources of thermal energy are available -- the combustion of hydrocarbon fuels and chemical reaction systems using metallic fuels. The combustion of hydrocarbon fuels is generally accomplished through the use of stored oxygen and results in combustion products (i.e., carbon dioxide and other oxides) which must be accomodated in some manner. Three basic methods have been used:

(1) Compression and overboard discharge;
(2) Removal of oxides by chemical scrubbing;
(3) Compression and on-board storage.

Each of these methods has inherent limitations and disadvantages. Overboard discharge is highly undesirable for a submersible vehicle from the standpoint of detection, engine performance and ballast control. For deep-diving submersibles, discharge may not be practicable at all operating depths and presents additional degradation of hull integrity and safety. Chemical scrubbing of the exhaust gases to remove oxides has been demonstrated to be a feasible method of providing a closed cycle Diesel engine for an underwater power supply [22]. However, the chemical scrubber system, which uses KOH, adds to the weight and complexity of the system. This system, which has been demonstrated on a prototype, is not yet in a production status.

The use of metallic fuels which can react in an exothermic manner offers the advantage that no gases are produced as a result of the reaction, thus eliminating the exhaust gas problems noted above. One such system developed by the Garrett Corp. uses molten lithium as the reactant and sulfur-hexafluoride as the oxidant. The products of combustion are all liquids, which simplifies the on-board storage problem. Since the products are heavier than the molten lithium, they can be stored in the same storage vessel as the lithium and settle to the bottom of the storage vessel. In this system, a combustor temperature of 1850 F has been developed, and an energy efficiency of 85% has been calculated for the heat source [9]. This system, when combined with a closed Brayton cycle gas turbine, has demonstrated excellent characteristics with respect to

Reproduced with permission of the copyright owner. Further reproduction prohibited without permission.

weight, specific fuel consumption and overall system efficiency.

An early application of the lithium and sulfur-hexafluoride energy source has been the propulsion system for Navy torpedoes. In previous systems, the combustion of a hydrocarbon fuel was used to provide thermal energy to a propulsion engine and the exhaust gases of combustion were discharged into the torpedo wake. While referred to as an open cycle [31], such systems are actually not true cycles in a thermodynamic sense. The discharge of exhaust gases presents some highly undesirable operational problems. In tight maneuvers of the torpedo, the exhaust gases can create a false target for the torpedo's sonar system, causing it to operate erratically. In addition, the back pressure encountered at deep depths reduces engine performance and results in a torpedo speed which is depth dependent.

To eliminate the problems associated with exhaust gas bubbles in the torpedo's wake, a closed cycle Rankine steam loop was developed using the lithium-sulfur hexafluoride exothermic reaction as a heat source [31]. The reaction is as follows:

$$8Li + SF_6 = Li_2S + 6LiF \qquad \text{(Eqn. A.1.1)}$$

The exothermic reaction produces approximately 20,000 Btu per pound of Lithium fuel. The reaction products are liquid and easily stored, and the gaseous wake is eliminated. The sealed reactor chamber supports the reaction independent of depth. This system is currently used in some production models of Navy torpedoes. Application to other types of submersible vehicles has been proposed by various sources, particularly in conjunction with a Stirling engine [90,91,92]. Experiments with a $Li/Na/SF_6$ system have demonstrated a heat production of 15-20 kw per liter of reactor volume [91]. Researchers at Pennsylvania State University developed a 25 kw Li/SF_6 energy source with an energy density of 4.75 kw-hr per kg of SF_6. Combustor thermal efficiencies as high as 91% were experienced using liquid Li and a combustor bath temperature in the vicinty of 1700F [90]. The application of this energy system to a long range AUV is considered feasible.

Reproduced with permission of the copyright owner. Further reproduction prohibited without permission.

A.2. Energy Systems Evaluation Data

A.2.1. Evaluation Data: Electrical Storage Batteries

	PRIMARY BATTERIES	SECONDARY BATTERIES
RELIABILITY	EXCELLENT 200-1000 cycles [4]	EXCELLENT Lead-Acid: 50-5000 cycles [2,4] Ni-H2: 10,000 cy [7]
DEPTH INDEP	Some gas products	Some gas products
SP POWER (kw/kg)	0.167: Al-Air [3] 0.014: Zn-Air [4] 0.014: Fe-Air [4]	0.014: Lead-Acid [4] 0.140: Ni-Zn [3] 0.300: Ni-H2 [7]
SP ENERGY (kw-hr/kg)	0.090: Zn-Air [6] 0.094: Fe-Air [7] 0.167: Al-Air [3] 0.290: Li-Air [6]	0.018-0.200:Lead-Acid 0.045: Ni-H2 [7] 0.060: Ni-Zn [7] 0.060: Li-FeS [4]
ENDURANCE (hr)	VERY POOR 0.4 - 10 [2,3,4]	VERY POOR 0.1 - 10 [2,4,5]
EFFICIENCY (Energy Eff)	52%: Al-Air [3] (Reduced by aux) 45%: Fe-Air [6] 40%: Zn-Air [6]	65%: Lead-Acid[2,4,7] 70%: Li-S [7] 70%: Ni-H2 [7] 80%: Li-FeS [4]
QUIETNESS	NEAR MAXIMUM (Reduced by aux)	MAXIMUM

Reproduced with permission of the copyright owner. Further reproduction prohibited without permission.

A.2.2. Evaluation Data: Fuel Cells

	ACID FUEL CELL	ALKALINE FUEL CELL
RELIABILITY	PA: POOR - Limited experience - Reduced by complexity [4] SPE: GOOD - MTBF > 5000 hr [12]	FAIR - Highly developed - More experience than acid cells [4]
DEPTH IND	PA: CO_2 reaction product storage problems SPE: Purged gas storage	H_2-O_2 Cell: reaction product is water, easily stored
SP POWER (kw/kg)	0.072: PA, H/C Fuel [9] 0.483: SPE,methanol [10] 0.100-0.300: SPE, H_2-O_2 [12]	0.252: H_2-O_2 [9]
SP ENERGY (kw-hr/kg)	0.016-0.170: PA [9] 0.440: SPE, gas [12] 1.000: SPE, cryo [12]	0.800: H_2-O_2 cryo [2] 0.250: Hydrazine-Hyd. Peroxide [2] 0.944: Li-H_2O_2 [9]
ENDURANCE	PA: 500-2000 [4] SPE(methanol): 5000 [10] SPE(H_2-O_2): 4000-40,000 [12]	H_2-O_2: 500-2000 [4]
EFFICIENCY	PA: 56% (43% system) [9] SPE (meth): 55% sys [10] SPE (H_2-O_2):51% sys [12]	H_2-O_2: 60% (36% system) [4,9]
QUIETNESS	EXCELLENT-- - Quieter than all except battery and alkaline cell	EXCELLENT-- - Quieter than all except battery

Reproduced with permission of the copyright owner. Further reproduction prohibited without permission.

A.2.3. Evaluation Data: Heat Engines

	STEAM ENGINES	GAS TURBINES
RELIABILITY	GOOD-- - Better than Stirling - Less than gas turbine or diesel	EXCELLENT-- - Unattended oper. for 40,000 hr
DEPTH IND	-Depends on heat source -Closed Rankine cycle allows flexibility in selection of heat source	-Depends on heat source -Closed Brayton cycle allows flexibility in selection of heat source
SP POWER (kw/kg)	-Generally heavier than Stirling, Diesel or Gas Turbine	-Comparable to Stirling -Better than Steam Eng or Diesel 0.237: H/C fuel [9] 0.044: nuc reactor [27]
SP FUEL CONSUMPTION (kg/kw-hr)	0.227: H/C fuel [4]	0.222 - 0.289: H/C fuel [9,13]
EFFICIENCY	20%: 100-200 KW [4] 41% : Max for large plants with superht, reheat, regen feed heating [4]	23%-32%: 200 KW, no reheat [27] 48%-52%: 18mw, regen, intercool, reheat
QUIETNESS	FAIR -- -Quieter than Diesel -Noisier than Stirling	FAIR -- -Quieter than Diesel -Noisier than Steam Turbine

Reproduced with permission of the copyright owner. Further reproduction prohibited without permission.

A.2.4. Evaluation Data: Heat Engines

	DIESEL ENGINE	STIRLING ENGINE
RELIABILITY	GOOD -- -MTBF up to 16,700 hr -Poor at part loads -Extensive experience [13]	POOR -- -Problems with seals, heater heads,control -Longest MTBF 1170 hr in NASA program [13]
DEPTH IND	POOR -- -Int. comb. engine complicates exhaust gas handling. -Prototype systems with exhaust scrubber [22]	-Depends on heat source -Closed Stirling cycle allows flexibility in selection of heat source
SP POWER (kw/kg)	0.094 [9]	Hydrocarbon fuel: 0.224 - 0.274 [25,86] 0.298: 62 kw [24]
SP ENERGY (kw-hr/kg)	Recycle system: 0.083 - 0.110 [88]	Hydrocarbon fuel: 0.110 [88]
SP FUEL CONSUMPTION (kg/kw-hr)	0.168 -0.213 [13]	Hydrocarbon fuel: 0.238 - 0.358 [86,87]
EFFICIENCY	29% - 37% [13,21]	31% [13,87] 28.2% - 38.5% [24] Potential to 60% [13]
QUIETNESS	POOR -- -Generally noisiest of all heat engines	EXCELLENT -- -Quieter than all other heat engines -12 db lower than gas auto engine [86]

Reproduced with permission of the copyright owner. Further reproduction prohibited without permission.

A.2.5. Evaluation Data: Thermal Energy Storage Heat Sources

	LATENT HEAT STORAGE	SENSIBLE HEAT STORAGE
RELIABILITY	VERY HIGH	VERY HIGH
DEPTH INDEP	Completely Independent	Completely Independent
SP ENERGY	0.200: Li-F [25]	Carbon Block: 0.110 - 0.220 [9]
ENDURANCE	POOR -- -Est. 8 times that of storage battery	POOR -- -Limited by size and weight constraints
EFFICIENCY	(No Data)	Carbon Block: 57.2% (incl. heat leakage) [9]
QUIETNESS	GOOD -- -Limited by aux. equip. -Quieter than nuclear reactor	EXCELLENT -- -Maximum quietness of all heat sources

Reproduced with permission of the copyright owner. Further reproduction prohibited without permission.

A.2.6. Evaluation Data: Combustion Heat Sources

	HYDROCARBON FUELS	METALLIC FUELS
RELIABILITY	-Less reliable than non-combustion sources	-More reliable than hydrocarbon fuels -Li-SF6: injectors not proven for extended operations
DEPTH INDEP	-Mechanical scrubbing or storage of exhaust gases required -- adds to complexity & wt.	Li-SF6: -Completely indep. of depth -Liquid exhaust prod. easily stored
SP ENERGY (kw-hr/kg)	2.99 - 3.48	Li-SF6: 1.99 [9] 1.80 [91] 1.00 [90]
ENDURANCE	-Limited by fuel storage capacity	-Limited by fuel storage capacity
SP FUEL CONSUMPTION (kg/kw-hr)	-With Stirling Engine: 0.238-0.358 [86,87]	-With Stirling Engine: 0.307 (est) [91]
EFFICIENCY	-Approx. 28% - 40% of avail heat of comb. lost to exhaust [17]	Li-SF6: 85% [9] 73%-91% [90]
QUIETNESS	-Quieter than nuclear reactor -Noisier than TES -Aux equip reduces quietness	-Comparable to hydrocarbon fuels -Aux equip reduces quietness

Reproduced with permission of the copyright owner. Further reproduction prohibited without permission.

A.2.7. Evaluation Data: Nuclear Heat Sources

	NUCLEAR REACTOR	RADIOISOTOPE
RELIABILITY	EXCELLENT -- -Extensive USN manned submarine experience	EXCELLENT
DEPTH INDEP	-Completely indep	-Completely indep
SP ENERGY (kw-hr/kg)	-Est range: 11 - 2750 for nominal life of 20,000 hr [2,26]	-Est range: 40 - 82 for nominal life of 20,000 hr [2,26]
SP POWER (kw/kg)	VERY POOR -- 0.00055 - 1.376 [26]	EXTREMELY POOR -- 0.0002 - 0.0041 [26]
ENDURANCE	EXCELLENT -- -10,000-20,000 hr [26] -1000 - 2000 full-power days for AMPS [28]	EXCELLENT -- -10,000-20,000 hr [26]
EFFICIENCY	9.5% - 30% est [26] -For 100 kw AMPS on Rankine refrigerant cycle: 9.5% [28]	10% - 20% est [26]
QUIETNESS	GOOD -- -Reduced by need for substantial pumping capability	EXCELLENT

Reproduced with permission of the copyright owner. Further reproduction prohibited without permission.

A.2.8. Energy Systems Evaluation Matrix

SYSTEM	RELIAB		DEPTH INDEP		WT		ENDUR		QUIET		EFFIC		Σq	Q Σwq
	w = 10		w = 9		w = 8		w = 8		w = 6		w = 5			
	q	wq	q	wq	q	wq	q	wq	q	wq	q	wq		
PRI BAT	8	80	9	81	2	16	1	8	9	54	9	45	38	284
SEC BAT	9	90	10	90	1	8	1	8	10	60	10	50	41	306
SPE FC	8	80	5	45	8	64	6	48	7	42	8	40	41	319
ALK FC	7	70	7	63	7	56	4	32	8	48	7	35	40	304
STM-NR	6	60	10	90	2	16	9	72	4	24	2	10	33	272
STM-HF	4	40	7	63	4	32	4	32	5	30	5	25	29	222
STM-MF	5	50	9	81	5	40	5	40	5	30	6	30	35	281
GT-NR	8	80	10	40	4	32	10	80	5	30	4	20	41	332
GT-HF	6	60	6	54	7	56	4	32	6	36	6	30	35	268
GT-MF	7	70	9	81	8	54	5	40	6	35	7	35	42	326
STIR-NR	3	30	10	90	4	32	8	64	6	36	3	15	34	267
STIR-HF	2	20	6	54	7	56	3	24	7	42	6	30	31	226
STIR-MF	3	30	9	81	8	64	4	32	7	42	7	35	38	284
DIES	6	60	5	45	3	24	4	32	5	30	5	25	28	216

NOTE:
1. See page 60 for definitions of system abbreviations.
2. w = weighting factor established for each specific evaluation factor, with a range of 1 to 10.
3. q = relative quality index for each specific system with respcet to a specific evaluation factor, with a range of 1 to 10.
4. Q = figure of merit for system = Σwq

Reproduced with permission of the copyright owner. Further reproduction prohibited without permission.

A.3. Power and Energy Calculations

A.3.1. Calculation of Required Propulsion Power

1. Partial Analytical Approach. This approach is generally considered as the standard technique for estimating the propulsion power for a vessel. It involves the calculation of the drag force using various drag coefficients. The basic relationships used are described below [32]:

$$EHP = Rt\ V / 550 \qquad \text{(Eqn. A.3.1)}$$

where:

EHP = effective horsepower (hp)
Rt = total bare-hull resistance (lb)
V = ship speed (ft/sec)
550 = ft-lb/sec for 1 hp

The total resistance can be expressed in terms of a total drag coefficient (Ct) as follows:

$$Rt = (1/2)\ Ct\, \rho\, S\ V^2 \qquad \text{(Eqn. A.3.2)}$$

where:

ρ = water density ($lb\text{-}sec^2/ft^4$)
(lb/ft^3 divided by g in ft/sec^2)
S = wetted surface area (ft^2)
Ct = total drag coefficient

The total drag coefficient consists of various individual drag coefficients, which are derived individually, and can be expressed as follows:

$$Ct = Cf + \Delta Cf + Cr + Cw$$

where:

Cf = frictional resistance coefficient
Δ Cf = correlation allowance for surface roughness
Cr = residual, or form, resistance coefficient
Cw = wave-making resistance coefficient

Plots of the frictional resistance coefficient (Cf) versus Reynolds number (Re) are available in many reference texts. The most commonly used plot is that of the International Tow Tank Conference (ITTC), which can be expressed by the following relationship:

$$Cf = 0.075 / [(\log Re) - 2]^2 \qquad \text{(Eqn. A.3.3)}$$

where:

Re = Reynolds number = VL/ν
L = ship's length (ft)
ν = kinematic viscosity of water (ft^2/sec)

Reproduced with permission of the copyright owner. Further reproduction prohibited without permission.

The correlation allowance (Δ Cf) is determined empirically for the specific hull surface. Common ship design practice is to use a "standard allowance" of 0.0004 and add this factor to Cf. The wave-making resistance, Cw, is also empirically obtained, but for a submerged vessel it may be ignored.

The residual, or form, resistance coefficient (Cr) is perhaps the most difficult to obtain. One method of determining Cr is through the use of dynamic similitude and model testing in a tow tank. Hoerner [95] provides some useful relationships in this regard for application to streamlined bodies. He expresses the total drag coefficient (Ct), based on wetted surface area, in terms of the vehicle geometry (length and diameter) and the frictional drag coefficient (Cf) as follows:

$$Ct = Cf\ [1 + 1.5(D/L)^{1.5} + 7(D/L)^{3}] \qquad \text{(Eqn. A.3.4)}$$

Hence, once Cf and Ct have been established, Rt and EHP can then be determined from Eqn. A.3.2 and Eqn. A.3.1. The shaft horsepower (SHP) is then calculated as follows:

$$SHP = EHP\ /\ PC \qquad \text{(Eqn. A.3.5)}$$

where: PC = propulsive coefficient

The propulsive coefficient is a combined factor which represents hull efficiency, propeller efficiency and propulsion drive mechanical efficiency. Each of these factors is empirically determined, and each is generally in the range of 0.90 - 0.95 for a reasonably well designed system. The resulting propulsion coefficient is generally in the range of 0.75 - 0.85 for most applications. In applying the partial analytical approach to the design vehicle, an interactive program, POWER-1, was developed and is described in Appendix E.

2. <u>Empirical Approach</u>. This approach involves the application of a simplified empirical relationship developed for torpedo-shaped vehicles, and is based on test results for bodies of this shape. The developers [85] claim that the empirical relationship has proven to be fairly accurate over the past 30 years in comparison with actual measurements. The following relationship is used:

$$SHP = (K)\ (L)^{0.75}\ (D)^{1.25}\ (V)^{2.86} \qquad \text{(Eqn. A.3.6)}$$

where:
- SHP = shaft horsepower (hp)
- K = empirical propulsive factor = 1.96×10^{-6} (based on 85% propulsion efficiency)
- L = length of vehicle (in)
- D = diameter of vehicle (in)
- V = speed of vehicle (knots)

Reproduced with permission of the copyright owner. Further reproduction prohibited without permission.

The relationship described by Eqn. A.3.6 was used as the basis for an interactive program, POWER-2, which is described in Appendix E.

3. Results. The results of applying programs POWER-1 and POWER-2 to the design configuration are summarized below, with the indicated shaft power (kw) for each speed listed.

	SHAFT POWER BY ANALYTICAL APPROACH (POWER-1)		SHAFT POWER BY EMPIRICAL APPROACH (POWER-2)
SPEED (KT)	HULL ONLY (KW)	HULL + APP (KW)	HULL + APP (KW)
3	0.25	0.33	0.37
5	1.07	1.42	1.60
10	7.78	10.17	11.61
15	24.91	32.38	37.01
20	56.96	73.73	84.28

4. Evaluation. The results of using the empirical approach are consistently about 12% to 14% higher than the results using the analytical approach with appendages for the speeds examined. A possible contributor to this variance may be the fact that the analytical approach uses an assumed allowance for surface roughness, which may be less than that actually experienced for vehicles of this type. Another difference is the fact that the empirical approach is based on data from torpedoes, which have a different appendage configuration than the design concept. For a more conservative approach in estimating power requirements for this study, the results of the empirical approach are used.

Reproduced with permission of the copyright owner. Further reproduction prohibited without permission.

A.3.2. Calculation of Main Propulsion Energy

For a 1-week (168 hour) mission, the given mission operating profile is as follows:

Transit:	10 kt,	30%	(50.4 hr)
Search:	5 kt,	60%	(100.8 hr)
Positioning:	0 kt,	10%	(16.8 hr)

The calculated propulsion power requirements for the proposed vehicle are obtained from Appendix A.3.1, using the empirical approach, and multiplied by the appropriate time factors to obtain propulsion energy:

10 kt:	(11.61 kw) x (50.4 hr)	=	585.1 kw-hr
5 kt:	(1.60 kw) x (100.8 hr)	=	161.3 kw-hr
0 kt:	(0.37 kw) x (16.8 hr)	=	6.2 kw-hr
Propulsion Energy (Mission)		=	752.6 kw-hr

A.3.3. Auxiliary Systems Energy

Assume 1 kw average over 168 hr mission: 168.0 kw-hr

A.3.4. Delivered and Generated Power and Energy

For assumed power transmission efficiency of 45%:
Power generated = Power delivered / 0.45

	TRANSIT PHASE		SEARCH PHASE		POSITIONING PHASE		TOTAL MISSION
	KW	KW-HR	KW	KW-HR	KW	KW-HR	KW-HR
Prop	11.61	585.1	1.60	161.3	0.37	6.2	752.6
Aux	1.00	50.4	1.00	100.8	1.00	16.8	168.0
Total	12.61	635.5	2.60	262.1	1.37	23.0	920.6
Design Factor (add 5%):	0.63	31.8	0.13	13.1	0.07	1.1	46.0
Total Delivered:	13.24	667.3	2.73	275.2	1.44	24.1	966.6
Total Generated:	29.42	1482.9	6.07	611.5	3.20	53.8	2148.2

Reproduced with permission of the copyright owner. Further reproduction prohibited without permission.

A.3.5. Estimates for System Restart Energy

1. Assumptions:

(1) System shut down during mission and all Li fuel has been solidified and cooled to an average temperature of 100F.
(2) At least 5% of maximum Li volume must be melted to allow SF_6 oxidant to be injected into the fuel to complete the melting process.

2. Lithium Properties [89]:

Molecular Weight: 6.94 gm
Heat of Fusion: 158.5 cal/gm (285.89 Btu/lb)
Sp. Gravity: 0.534 (solid @ 20C)(Density: 33.3 lb/ft^3)
0.515 (liquid @ melting pt.)
Thermal Cond (k): 0.859 w/cm-K (49.63 Btu/hr-ft-F)
Melting Pt: 178.8C (353.8F)
Sp. Heat (Cp): 0.814 cal/gm-K (@ 25C) (0.816 Btu/lb-F)

3. Sulfur Hexafluoride Properties [89]:

Molecular Weight: 146.05 gm
Density (Liquid): 73.05 lb/ft^3
Boiling Pt: -63.8C (-82.8F) (subl.)

4. Lithium Volume and Mass Calculations:

Total Lithium volume = 45.2 ft^3 (Appendix B.2.2.)
Li volume to be heated/melted = (0.05)(Total Li volume)
Vol = (0.05)(45.2 ft^3) = 2.26 ft^3

Li mass to be heated/melted = (Li vol)(density)
Mass = (2.26 ft^3)(33.3 lb/ft^3) = 75.3 lb

4. Energy Requirements for Heating/Melting:

Energy to heat 5% of total Li from 100F to melting pt.:
kw-hr = (mass) (sp.heat) (Tmelt - 100F)
= (75.3lb)(0.816 Btu/lb-F)(254F)(1 kw-hr/3412Btu)
= 4.57 kw-hr

Energy to melt 5% of total Li at melting pt.:
kw-hr = (mass)(heat of fusion)
= (75.3 lb)(285.89 Btu/lb)(1 kw-hr/3412 Btu)
= 6.31 kw-hr

Total Restart Energy:
kw-hr = heating energy + melting energy
= 4.57 kw-hr + 6.31 kw-hr = 10.88 kw-hr

Reproduced with permission of the copyright owner. Further reproduction prohibited without permission.

A.3.6. Calculation of Backup Energy Capacity Requirement

1. Assumptions:

Starting with a backup battery at 95% of a fully charged condition, assume that the battery can provide sufficient energy to accomplish each of the following scenarios individually, but not concurrently:

Scenario A: Provide propulsion power for a low speed transit of 30 miles, while supporting a normal auxiliary load for the entire transit.

Scenario B: Provide sufficient energy to support one full restart of the primary power system (assume Lithium fuel cooled to 100F) while supplying a reduced auxiliary load (50% of normal) for 8 hours.

2. Capacity Calculations:

Scenario A:

Propulsion energy (3 kt. for 10 hr):
kw-hr = (0.37 kw)(10 hr)(1/.45 eff) = 8.22 kw-hr

Auxiliary loads (1.0 kw for 10 hr):
kw-hr = (1.0 kw)(10 hr) = 10.00 kw-hr

Total energy required = 18.22 kw-hr

Battery capacity (100%) = 18.22/0.95 = 19.18 kw-hr

Scenario B:

Restart energy (Appendix A.3.5) = 10.88 kw-hr

Auxiliary loads (0.5 kw for 8 hr) = 4.00 kw-hr

Total energy required = 14.88 kw-hr

Battery capacity (100%) = 14.88/0.95 = 14.15 kw-hr

Capacity: Select 20 kw-hr battery, based on Scenario A.

Reproduced with permission of the copyright owner. Further reproduction prohibited without permission.

A.3.7. Power Distribution and Data

1. Normal Power Distribution

Transit Phase (Full Power, 10 kt)

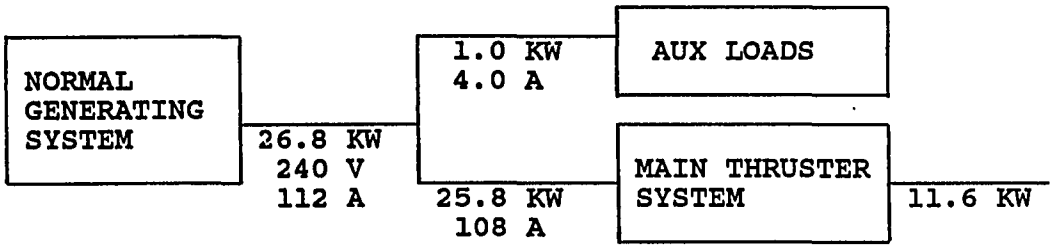

Search Phase (Medium Power, 5 kt)

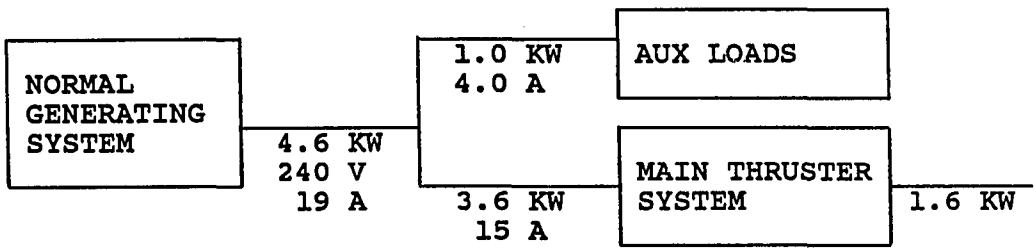

Positioning Phase (Minimum Power, 0-3 kt)

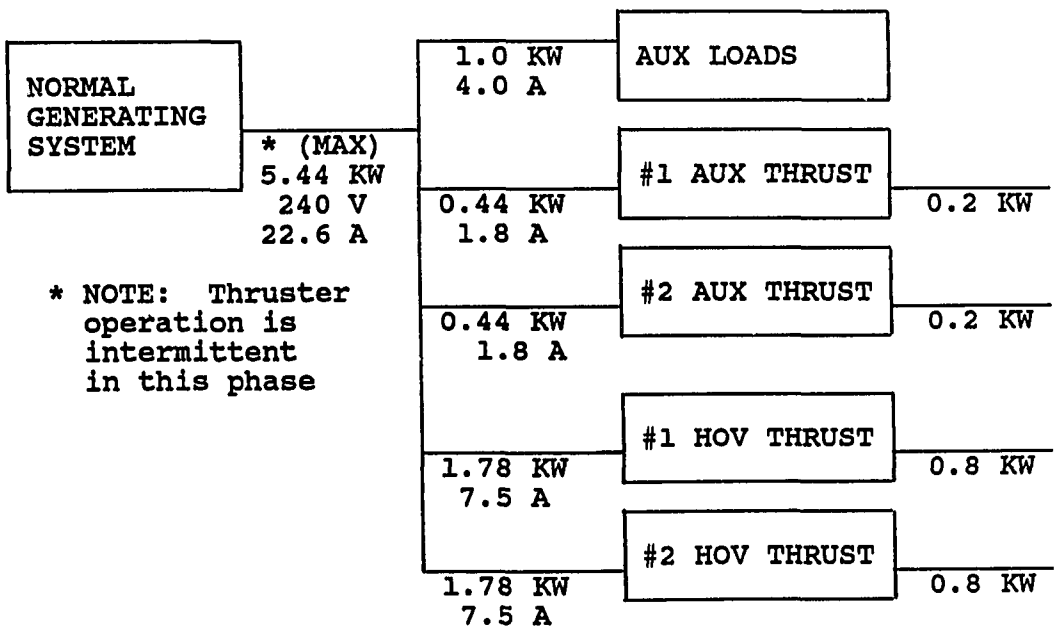

* NOTE: Thruster operation is intermittent in this phase

Reproduced with permission of the copyright owner. Further reproduction prohibited without permission.

2. Backup Power Distribution

Emergency - Full Power (5 kt, 4 hr, 18.4 kw-hr)

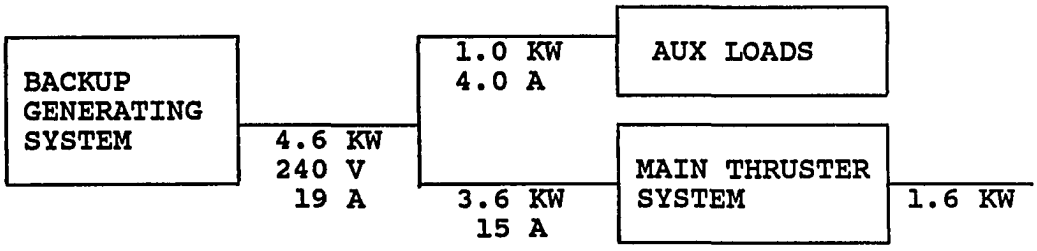

Emergency - Minimum Power (3 kt, 10 hr, 18.8 kw-hr)

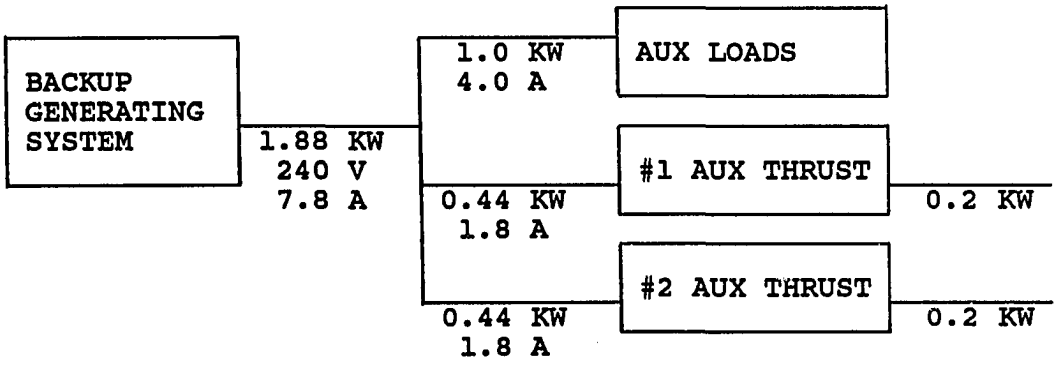

Reproduced with permission of the copyright owner. Further reproduction prohibited without permission.

A.4. Energy System Thermal Analyses

A.4.1. Heat Balance

1. Heat Balance Diagram

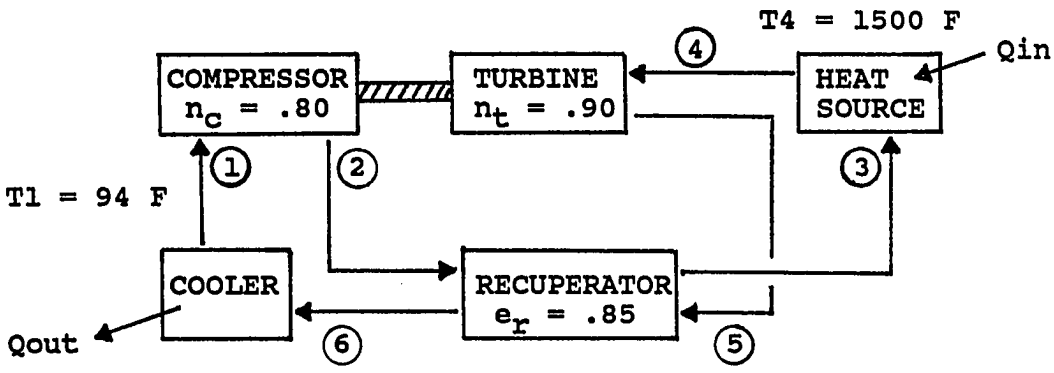

2. Given System Data:

Maximum Output Power: 35 kw
Working Fluid: Argon (MW = 39.9, k = Cp/Cv = 1.67)
Turbine Inlet Temp = T_4 = 1500F (1960R)
Compressor Inlet Temp = T_1 = 94F (554R)
Compressor Outlet Press = p_2 = 72 psia (at max. power)
Compressor Efficiency = n_c = 80%
Turbine Efficiency = n_t = 90%
Recuperator Effectiveness = e_r = 85%
Compressor Pressure Ratio = p2/p1 = 1.895
BETA = Turbine Press Ratio/Compr Press Ratio = 0.934

3. Assumptions for Heat Balance Calculations:

(1) Working fluid mass flows and pressures vary directly with power output.
(2) Working fluid temperatures remain constant for the entire power range.
(3) Mechanical losses are 2% of output power at power levels above 0% (0.04 kw at 0% power).
(4) Working fluid pressure drops on the high pressure side (recuperator, heat source) are 4% of compressor outlet pressure.
(5) Bleed flow used for engine bearings is 3% of the total compressor/cooler mass flow (m_c), so that turbine mass flow can be expressed as: $m_t = 0.97\ m_c$.
(6) Efficiencies of compressor and turbine remain constant over the entire power range.

Reproduced with permission of the copyright owner. Further reproduction prohibited without permission.

4. Heat Balance Calculations: The actual calculations for various system parameters, based on given system data and assumptions, are accomplished in PROGRAM BRAYTON. A description of the program and the input and output data is contained in Appendix E. The relationships used in PROGRAM BRAYTON are described below.

(1) Temperatures (T4, T1 given)

$T2 = T1 + (T2i-T1/n_c)$
where: $T2i = T1\ (p2/p1)^{k-1/k}$ (isentropic process)
n_c = compressor efficiency (given)
k = Cp/Cv (given)

$T5 = T4 - n_t(T4-T5i)$
where: $T5i = T4\ (p5/p4)^{k-1/k}$ (isentropic process)
n_t = turbine efficiency

$T3 = T2 + e_r(T5-T2)$
where: e_r = recuperator effectiveness (given)

$T6 = T5 - (T3-T2)$

(2) Pressures (p2 given)

p4 = (1 - % hp loss/100)(p2)
where: % hp loss = press loss on high press side (4%)

p5 = p4/TPR
where: TPR = turbine press ratio = (BETA)(CPR)
CPR = compressor press ratio (given)
BETA = TPR/CPR (given)

p1 = p2/CPR

(3) Mass Flows

For W(net) + W(loss) = Qin - Qout
$W(net) + W(loss) = m_t\ Cp\ (T4-T3) - m_c\ Cp\ (T6-T1)$
where: $m_t = 0.97\ m_c$ (assumed)
Cp = (2.5)(1545)/(MW)(777.97)
MW = molecular weight (given)
W(net) = net output power (given)
W(loss) = mechanical losses (assumed 2% of output)

(4) Power:

$W(turbine) = m_t\ Cp\ (T4-T5)$
$W(compr) = m_c\ Cp\ (T2-T1)$
$Qin = m_t Cp(T4-T3)$
$Qout = m_c Cp(T6-T1)$

(5) Cycle Efficiency: n(cycle) = W(net)/Qin

Reproduced with permission of the copyright owner. Further reproduction prohibited without permission.

5. Heat Balance Results

The output data of PROGRAM BRAYTON for the various power modes are summarized below:

		POWER LEVELS			
PARAMETER	UNITS	MAXIMUM	FULL	MEDIUM	LOW
W(net)	kw	35.00	29.42	6.07	3.20
T1	F	94	94	94	94
T2	F	296	296	296	296
T3	F	1013	1013	1013	1013
T4	F	1500	1500	1500	1500
T5	F	1139	1139	1139	1139
T6	F	423	423	423	423
P1	psia	38.00	31.94	6.59	3.47
P2	psia	72.00	60.52	12.49	6.58
P4	psia	69.12	58.10	11.99	6.32
m_t	lb/sec	1.830	1.538	0.317	0.167
m_c	lb/sec	1.887	1.586	0.327	0.173
W(turb)	kw	86.75	72.92	15.04	7.93
W(comp)	kw	50.11	42.12	8.69	4.58
Qin	kw	117.12	98.44	20.31	10.71
Qout	kw	81.42	68.44	14.12	7.44
Sys Eff	%	29.9	29.9	29.9	29.9

Heat Balance Diagram

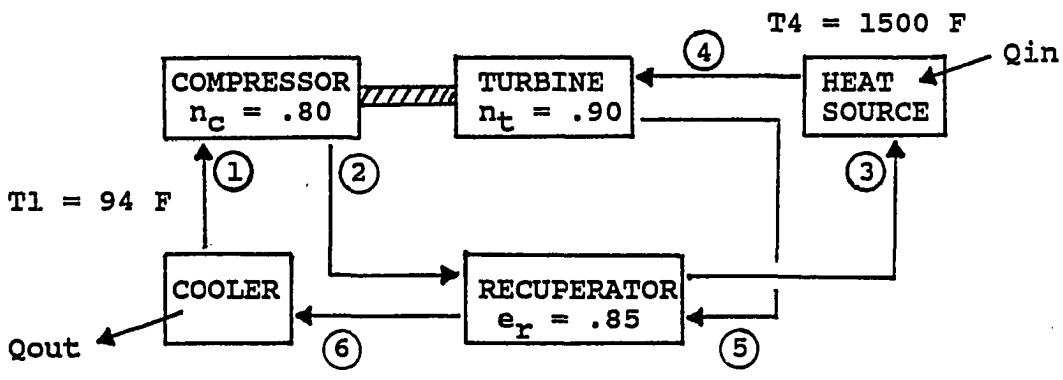

Reproduced with permission of the copyright owner. Further reproduction prohibited without permission.

A.4.2. Estimate of Reactor Vessel Thermal Leakage

1. Assumptions

(1) The reactor vessel is filled with liquid lithium fuel and products at a bulk temperature of 1650 F.
(2) The reactor vessel walls are at the same temperature as the internal fluid (1650 F). (3) The configuration of the reactor vessel is that of a right circular cylinder with a length of 6 ft. and an inside diameter of 3.0 ft. The ends of the vessel may be treated as circular flat plates.
(4) The external surface of the vessel is covered with a polyurethane insulation, or equivalent, with a thickness of 3 inches and a thermal conductivity (k) of 0.019 Btu/hr-ft-F.
(5) The ambient temperature of the air around the vessel is 60 F, with an average convective coefficient (h) of 2.0 Btu/hr-ft^2-F for natural convection.

2. Calculations

(1) Heat transfer through the cylinder side wall:

$$Q(wall) = (Ti-To) \;/\; [(\ln ro/ri)/2\pi kL + (1/hAo)]$$
$$= (1590)/[(\ln 1.75/1.5)/2\pi(.019)(6)+1/2\pi(3.5)(6)]$$
$$= 7137 \text{ Btu/hr}$$

(2) Heat transfer from one end:

$$Q(end) = (Ti-To) \;/\; [(L/kA)+(1/hA)]$$
$$= (1590)/[(0.25)/(0.019)\pi(1.5)^2 + 1/(2)\pi(1.5)^2]$$
$$= 823 \text{ Btu/hr}$$

(3) $Q(loss) = Q(wall) + 2\,Q(end)$
$= \underline{8,783 \text{ Btu/hr}} = \underline{2.57 \text{ kw}}$

(4) Since the temperatures remain constant throughout a mission, the heat loss flux should remain constant. For a mission of 168 hr, the total energy loss is:
$E(loss) = (2.57 \text{ kw})(168 \text{ hr}) = \underline{431.8 \text{ kw-hr}}$

3. Evaluation

For estimating fuel and oxidant weights, the heat loss for the reactor was assumed to be 10% of the heat of reaction (see Appendix B.2.2), or:

E(loss) = 0.10 (4.275 kw-hr/kg of SF6) = 0.4275 kw-hr/kg

For a total mission weight of 1799.7 kg of SF6:

E(loss) = (0.4275 kw-hr/kg)(1799.7 kg) = 769.4 kw-hr

Thus, the assumed 10% heat loss provides a reasonable and conservative estimate for the mission parameters.

Reproduced with permission of the copyright owner. Further reproduction prohibited without permission.

A.4.3. Heat Exchanger Size Estimates

1. Assumptions:

(1) Maximum power (35 kw) parameters are to be used.
(2) The Log Mean Temperature Difference (LMTD) technique can be applied to estimate heat transfer areas for heat exchangers.
(3) The heat source heat exchanger consists of coils of 5/8-inch tubing arranged in a cylindrical shape, with a cylinder diameter of 3 ft., located inside the reactor vessel.
(4) The liquid lithium in the reactor vessel is at a uniform bulk temperature of 1650 F.
(5) A shell and tube type configuration is used for the recuperator and cooler, using 5/8-inch tubing. Assume heat exchanger length is 6 inches longer than tube length to accommodate inlet and outlet headers.

2. Heat Source Heat Exchanger Size

The surface area required for heat transfer, Ahx, is given by the following:

$$Ahx = Qhx / (U)(LMTD) \qquad \text{(Eqn. A.4.3.1)}$$

where:

Qhx = Qin = 117.12 kw = 399,613 Btu/hr
U = overall heat transfer coefficient (But/hr-ft^2-F)
LMTD = log mean temperature difference (F)
= [(Th2-Tc2)-(Th1-Tc1)] / ln[(Th2-Tc2)/(Th1-Tc1)]
= 336.8F
(h,c refer to hotter and cooler fluids)
(1,2 refer to fluid conditions)

For a gas-liquid tubular heat exchanger [93]:
Design U = 40 Btu/hr-ft^2-F
Applying Eqn. A.4.3.1: Ahx = 29.66 ft^2

The length of the heat exchanger is estimated as follows:
Dhx = Diameter of heat exchanger = 3 ft
Dt = Diameter of tubing = 5/8-inch
Lt = Total length tubing in heat exchanger = Ahx/Dt
= 181 ft
Ll = Length of tubing in 3-ft diameter loop = π Dhx
= 9.425 ft / loop
Nl = Number of loops = Lt / Ll = 19.2 (use 20)
Sl = spacing between loops (assume 4 times tube OD)
Then:
Lhx = Length of heat exchanger with 3-ft diameter
= Nl (Sl + 1)(Dt)
= (20)(4+1)(3/8 in)(1 ft/12 in) = 3.125 ft

Reproduced with permission of the copyright owner. Further reproduction prohibited without permission.

3. Cooler Size

Applying Eqn. A.4.3.1, where:

$Qhx = Qout = 81.42$ kw $= 277{,}805$ Btu/hr

LMTD = 152.2 F

$U = 30$ Btu/hr-ft^2-F (estimate from ref [93])

Then:

$Ahx = Qhx / (U)(LMTD) = \underline{60.7\ ft^2}$

For 17.25-inch shell ID, Dt = 5/8-in OD tubes, 1-pass:

Nt = number of tubes in shell-and-tube heat exchanger = 320 (from Table 11-3, ref [93])

At = heat transfer area per tube = Ahx/Nt = 27.32 in^2

Lt = length per tube = At / π Dt = 13.9 in

Lhx = Lt + 6 in = <u>20 in</u>

4. Recuperator Size

Applying Eqn. A.4.3.1, where:

$Qr = m_t\ Cp\ (T5 - T6) = 584{,}910$ Btu/hr

LMTD = 126.5 F

$U = 30$ Btu/hr-ft^2-F (estimate from ref [93])

Then:

$Ar = Qr / (U)(LMTD) = \underline{92.5\ ft^2}$

For 17.25-inch shell ID, Dt = 5/8-in OD tubes, 1-pass:

Nt = 320 tubes (Table 11-3, ref [93])

At = Ahx / Nt = 41.625 in^2 / tube

Lt = At / πDt = 21.2 in

Lhx = Lt + 6 in = <u>27 in</u>

5. Reactor Size

The reactor size is determined by the following parameters:

(1) Maximum volume of Li required for a mission
(2) Size of heat exchanger for heating working fluid
(3) Vehicle dimensions
(4) Maximum volume of reaction products expected
(5) Additional volume to permit injection of oxidant

From Appendix B.2.2.:

Maximum volume of Li/mission = 45.2 ft^3

Maximum volume of reaction products/mission = 37.7 ft^3

Hence: use maximum Li volume as basis for size

Assuming a 20% excess volume for design and to provide a volume for the injection of the oxidant:

Volume of reactor = 1.20 (45.2 ft^3) = 54.24 ft^3

For a reactor vessel inside radius = Rr = 1.5 ft:

Length of reactor = Volume/π Rr^2 = <u>5.76 ft</u>

Reproduced with permission of the copyright owner. Further reproduction prohibited without permission.

6. Summary of Heat Exchanger Parameters

	Heat Transfer Area (ft^2)	No. of Tubes	Diameter (ft)	Length (ft)
Heat Source	29.66	(Note 1)	3.00	3.125
Cooler	60.70	320	1.44	1.67
Recuperator	92.50	320	1.44	2.25
Reactor Vessel	(Note 2)	(Note 2)	3.00	5.76

Note:

1. The heat source heat exchanger consists of a single tube configured in a right circular cylinder with a diameter of 3 ft. The working fluid flows inside the tube.

2. The reactor vessel contains the fuel and serves as the combustion chamber. It also contains the heat source heat exchanger.

Reproduced with permission of the copyright owner. Further reproduction prohibited without permission.

APPENDIX B. WEIGHT AND VOLUME CALCULATIONS

Reproduced with permission of the copyright owner. Further reproduction prohibited without permission.

B.1. Vehicle Displacement and Volume

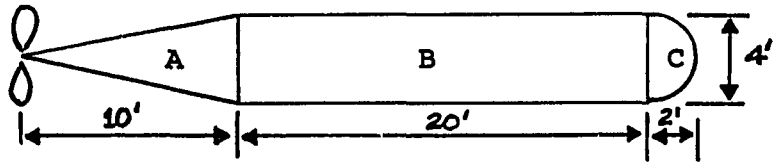

1. Volumes:

$$V_A = (1/3)\pi r^2 h = 41.89 \text{ ft}^3$$

$$V_B = \pi r^2 h = 251.33 \text{ ft}^3$$

$$V_C = (1/12)\pi d^3 = 16.76 \text{ ft}^3$$

Total Volume = 309.98 ft^3

2. Displacement in Sea Water (64.0 lb/ft^3)

Displ. = Volume x Density
= (309.98 ft^3)(64.0 lb/ft^3)
= 19,838 lb

NOTE:

1. Displacements of control surfaces, external propulsors and other appendages are not included in the above calculations. The total of these appendages is expected to be less than 0.1% of the total displacement.

2. The approximations of the three major hull sections to a cone, a right circular cylinder and a hemisphere is considered sufficiently accurate for the conceptual design.

Reproduced with permission of the copyright owner. Further reproduction prohibited without permission.

B.2. Primary Power System

B.2.1. Overall System Weight and Volume Estimates

1. Primary Power System Density Factors [94]:

System Energy/Weight = 0.144 kw-hr/lb
System Energy/Volume = 8.66 kw-hr/ft^3

2. Overall System Weight and Volume Calculations:

For total system energy requirement of 966.6 kw-hr:

Weight = (966.6 kw-hr)(1 lb/0.144 kw-hr)
= 6712.5 lb (33.8% of vehicle displ.)

Volume = (966.6 kw-hr)(1 ft^3/8.66 kw-hr)
= 111.6 ft^3 (36.0% of vehicle volume)

NOTE:

1. The above estimates are based on empirical data for comparable systems designed and built by the Garrett Corp. [94], and include:
   (1) All power generating machinery and components (Closed Brayton cycle with Li-SF6 heat source)
   (2) Fuel systems and associated tanks and piping
   (3) Electrical generating system, with an overall transmission efficiency of 45%

2. Separate calculations are made for fuel and oxidant weights and volumes in Appendix B.2.2.

Reproduced with permission of the copyright owner. Further reproduction prohibited without permission.

B.2.2. Fuel and Oxidant Estimates

1. Chemical Reaction: $8Li + SF_6 = Li_2S + 6LiF$

2. Lithium and SF_6 Properties: (See Appendix A.3.5)
   Li: mol. wt. = 6.94; density = 33.30 lb/ft^3
   SF_6: mol. wt. = 146.05; density = 73.05 lb/ft^3

3. Heat of Reaction [90]:
   Theoretical Heat of Reaction = 4.75 kw-hr/kg of SF_6
   For an assumed combustor efficiency of 90%:
   Net heat of reaction = (0.90)(4.75)
   = 4.275 kw-hr/kg of SF_6
   For an assumed heat loss of 10%:
   Effective heat of reaction = (1 - 0.10)(4.275)
   = 3.85 kw-hr/kg of SF_6

4. Relative Weights of Reactants:
   From the equation of the chemical reaction:
   8 moles of Li react with 1 mole of SF_6
   For each lb of Li in the reaction:
   Wt. of SF_6 = (1)(mol.wt.SF_6)/(8)(mol.wt.Li)
   = (1)(146.05)/(8)(6.94)
   = 2.63 lb SF_6 / lb Li

5. Energy Requirements (Mission):
   From Appendix A.3:
   Energy delivered to prop & aux = 966.6 kw-hr/mission
   For average transmission efficiency of 45%:
   Energy from generating sys = (966.6 kw-hr)/(0.45)
   = 2148 kw-hr/mission
   For average thermal efficiency of 31%:
   Energy from heat source sys = (2148 kw-hr)/(0.31)
   = 6929.0 kw-hr/mission

6. Fuel and Oxidant Weights (Mission):
   Weight SF_6 = (kw-hr/mission) / (kw-hr/kg SF_6)
   = (6929 kw-hr) / (3.85 kw-hr/kg)
   = 1799.7 kg = 3959.4 lb SF_6/mission

   Weight Li = (1 lb Li/2.63 lb SF_6)(Wt SF_6)
   = (1 / 2.63)(3959.4 lb)
   = 1505.5 lb Li/mission

   Total Weight of Fuel and Oxidant = 5464.9 lb/mission
   % Total Weight / Vehicle Displacement = 27.5%

7. Fuel and Oxidant Volumes (Mission):
   Volume Li = (1505.5 lb)/(33.3 lb/ft^3) = 45.2 ft^3
   Volume (SF_6) = (3959.3 lb)/(73.05 lb/ft^3 = 54.2 ft^3
   Total Volume (Fuel + Oxidant) = 99.4 ft^3
   % Total Volume / Vehicle Volume = 32.1 %

Reproduced with permission of the copyright owner. Further reproduction prohibited without permission.

8. Fuel and Oxidant Mass Flow Rates:

Transit Phase (10 kt)

Power delivered (prop & aux) = 13.24 kw
Power from generating sys = (power delivered)/(eff)
= 13.24 / 0.45 = 29.4 kw
Power from heat source = (power gen)/(thermal eff)
= 29.4 / 0.31) = 94.8 kw
For 90% combustor eff and 10% heat loss:
Effective heat of reaction = 3.85 kw-hr/kg SF_6
m (SF6) = Heat source power / Heat of reaction
= (94.8 kw / 3.85 kw-hr/kg)(2.2 lb/kg)
= 54.19 lb/hr
m (Li) = m (SF6) / 2.63
= 54.19 / 2.63 = 20.61 lb/hr

Search Phase (5 kt)

Power delivered = (1.60 + 1.00)(1.05) = 2.73 kw
Power generated = 2.73 / 0.45 = 6.07 kw
Power from heat source = 6.07 / 0.31 = 19.58 kw
m (SF6) = (19.58 kw / 3.85 kw-hr/kg)(2.2 lb/kg)
= 11.19 lb/hr
m (Li) = 11.19 / 2.63 = 4.25 lb/hr

Positioning Phase (0 kt)

Power delivered = (0.37 + 1.00)(1.05) = 1.44 kw
Power generated = 1.44 / 0.45 = 3.20 kw
Power from heat source = Qin = 10.47 kw (see A.4.2)
m (SF6) = (10.47 kw / 3.85 kw-hr/kg)(2.2 lb/kg)
= 5.98 lb/hr
m (Li) = 5.98 / 2.63 = 2.27 lb/hr

Reproduced with permission of the copyright owner. Further reproduction prohibited without permission.

9. Fuel and Oxidant Weights (from flow rates)

Transit Phase (50.4 hr)

Weight SF_6 = (flow rate)(transit time)
= (54.19 lb/hr)(50.4 hr) = 2731.2 lb
Weight Li = (20.61 lb/hr)(50.4 hr) = 1038.7 lb

Search Phase (100.8 hr)

Weight SF_6 = (11.19 lb/hr)(100.8 hr) = 1127.9 lb
Weight Li = (4.25 lb/hr)(100.8 hr) = 428.4 lb

Positioning Phase (16.8 hr)

Weight SF_6 = (5.98 lb/hr)(16.8 hr) = 100.5 lb
Weight Li = (2.27 lb/hr)(16.8 hr) = 38.1 lb

Total Mission Weight

Weight SF_6 = 2731.2 + 1127.9 + 100.5 = 3959.6 lb
Weight Li = 1038.7 + 428.4 + 38.1 = 1505.2 lb
Total Weight (SF_6 + Li) = 5464.8 lb

10. Weight and Volume of Products

From the equation of the chemical reaction:
8 moles of Li and 1 mole of SF_6 produce:
1 mole Li_2S (mol.wt. = 45.94, density = 103.58 lb/ft^3)
6 moles LiF (mol.wt. = 25.94, density = 164.42 lb/ft^3)

Weight of Products (Mission)

Assuming 100% of fuel and oxidant are expended:

Wt. Li_2S = (wt. SF_6/mission)(mol.wt.Li_2S)/(mol.wt. SF_6)
= (3959.4 lb)(45.94)/(146.05) = 1245.3 lb

Wt. LiF = 6(wt. SF_6/mission)(mol.wt. LiF)/(mol.wt. SF_6)
= 6(3959.4)(25.94)/(146.05) = 4219.5 lb

Total Wt. of Products = 5464.8 lb
(Note: This is consistent with total mission weight of fuel and oxidant as calculated above, and in Section 6 of Appendix B.2.2.)

Volume or Products (Mission)

Assuming 100% of fuel and oxidant are expended:

Volume Li_2S = (Wt. Li_2S)/(Density Li_2S)
= (1245.3 lb)/(103.58 lb/ft^3) = 12.02 ft^3

Volume LiF = (Wt. LiF)/(Density LiF)
= (4219.5 lb)/(164.42 lb/ft^3) = 25.66 ft^3

Total Volume of Products = 37.68 ft^3

Reproduced with permission of the copyright owner. Further reproduction prohibited without permission.

B.3. Backup Power System

B.3.1. Secondary Storage Battery Data:

Type Battery: Nickel-Hydrogen
Energy Density: 0.045 kw-hr/kg
Average Battery Density: 160 lb/ft^3
Total Battery Energy Capacity: 20 kw-hr

B.3.2. Weight and Volume Calculations:

Wt = (1 kg/0.045 kw-hr)(2.2 lb/kg)(20 kw-hr)
= 977.8 lb (4.9% vehicle displ)

Volume = (1 ft^3/160 lb)(977.8 lb)
= 6.11 ft^3 (2.0% vehicle volume)

Reproduced with permission of the copyright owner. Further reproduction prohibited without permission.

B.4. Summary of Weights and Volumes

1. Vehicle

Volume: 310 ft^3
Displacement: 19,838 lb

2. Power System

	Primary System		Backup System	Total
	Fuel & Oxid	Total System		
Weight (lb)	5464.8	6712.5	977.8	7690.3
% Displ	27.5	33.8	4.9	38.7
Volume (ft^3)	99.4	111.6	6.1	117.7
% Vehicle Vol	32.1	36.0	2.0	38.0

Reproduced with permission of the copyright owner. Further reproduction prohibited without permission.

APPENDIX C. RELIABILITY DATA AND CALCULATIONS

Reproduced with permission of the copyright owner. Further reproduction prohibited without permission.

C.1. Reliability Data Tables

Table C.1.1. Heat Source System Reliability Data

COMPONENT	FAIL RATE ($\lambda \times 10^6$)	t (hr)	$R = e^{-\lambda t}$
Oxidant Storage Tank	0.004	168	0.99999
Electrical Heater (NOTE 1)	14.000	168	0.99765
Heater Switch (NOTE 1)	1.450	168	0.99976
Reactor/Boiler Vessel	5.798	168	0.99903
Oxidant Pressure Reg. Valve	9.572	168	0.99839
Oxidant Injector Valve	3146.593	168	0.58941
Temperature Sensor	0.050	168	0.99999
Pressure Sensor	1.998	168	0.99966
Tank Level Sensor	5.277	168	0.99912
Oxidant Flowmeter	1.998	168	0.99966

NOTES:

1. Component not expected to operate continuously throughout mission. However, calculations based on entire mission duration for simplification and for added assurance.

Reproduced with permission of the copyright owner. Further reproduction prohibited without permission.

Table C.1.2. Power Generating System Reliability Data

COMPONENT	FAIL RATE ($\lambda \times 10^6$)	t (hr)	$R = e^{-\lambda t}$
Power Turbine	0.104	168	0.99998
Compressor	0.104	168	0.99998
Main Shaft Bearing	0.034	168	0.99999
Generator	2.369	168	0.99960
Recuperator	0.004	168	0.99999
Cooler	0.004	168	0.99999
Accumulator	0.229	168	0.99999
Control Valve / Bypass Valve	18.990	168	0.99681
Storage Battery (NOTE 1)	0.016	168	0.99999
Battery Charger (NOTE 2)	7.190	16	0.99988
Starter Motor (NOTE 1)	7.190	168	0.99879
Electrical Switch (NOTE 1)	1.450	168	0.99976
Wiring Harness	0.288	168	0.99995
Vibration Sensor	0.419	168	0.99993
Battery Discharge Sensor	0.792	168	0.99987

NOTES:
1. See NOTE 1 of Table C.1.1.
2. Based on two 8-hour battery charges during mission.

Reproduced with permission of the copyright owner. Further reproduction prohibited without permission.

Table C.1.3. Thruster System Reliability Data

COMPONENT	FAIL RATE ($\lambda \times 10^6$)	t (hr)	$R = e^{-\lambda t}$
Motor Controller	2.369	168	0.99960
Main Propulsion Motor	0.871	168	0.99985
Main Shaft Thrust Bearing	0.034	168	0.99999
Hovering Motor (NOTE 3)	0.499	17	0.99999
Aux. Prop. Motor (NOTE 1)	0.499	168	0.99992
Main or Aux. Propeller	0.004	168	0.99999
Hovering Propeller (NOTE 3)	0.004	17	0.99999
Electrical Switch (NOTE 1)	1.450	168	0.99976
Voltage Sensor	0.792	168	0.99987
Current Sensor	0.792	168	0.99987
Switch Position Sensor	5.300	168	0.99887
Shaft Speed (RPM) Sensor	0.915	168	0.99985

NOTES:
1. See NOTE 1 of Table C.1.1.
3. Hovering system assumed to operate during positioning phase, or 10% of total mission time.

Reproduced with permission of the copyright owner. Further reproduction prohibited without permission.

C.2. Reliability Block Diagrams

Figure C.2.1. Reliability Block Diagram - Heat Source System

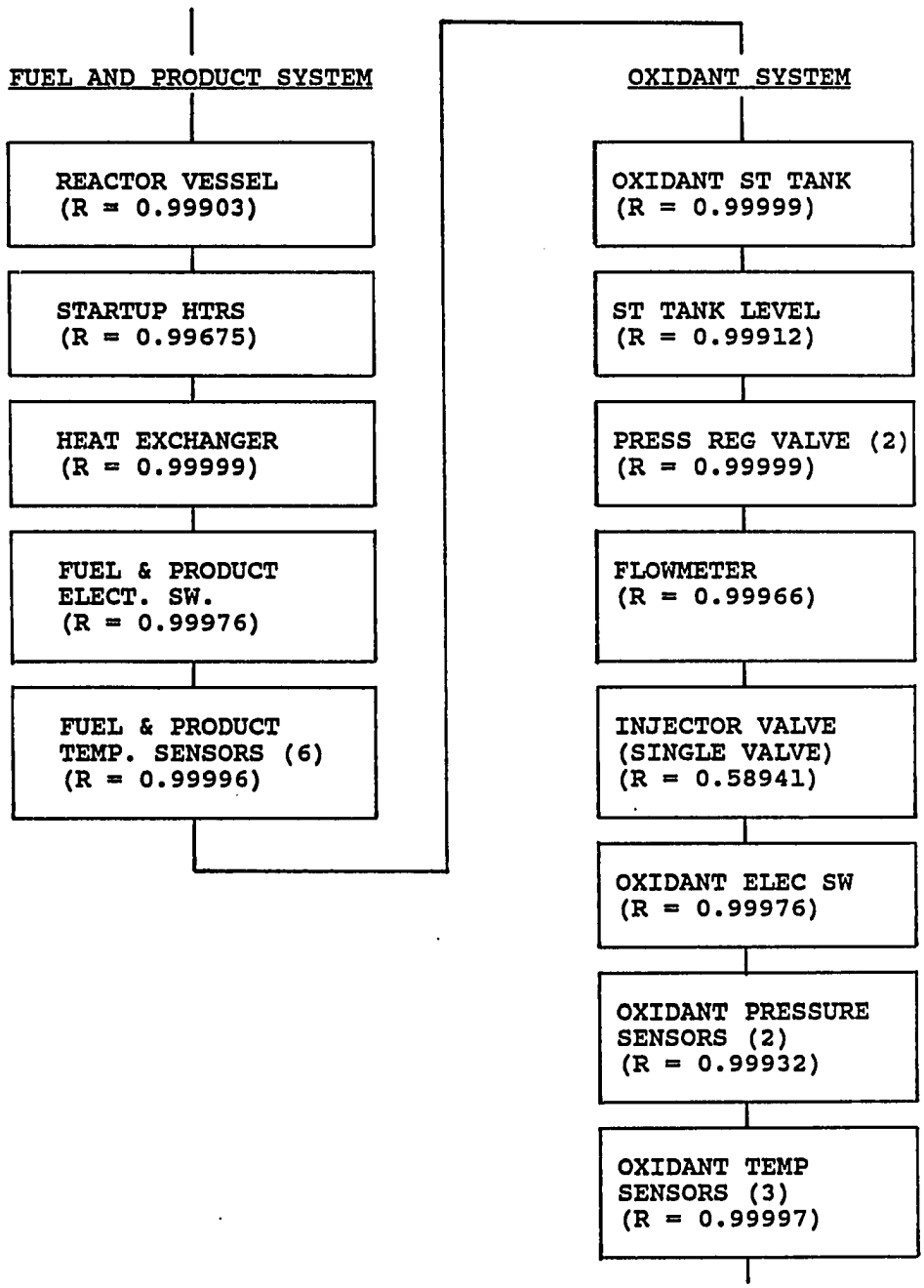

Reproduced with permission of the copyright owner. Further reproduction prohibited without permission.

Figure C.2.2. Reliability Block Diagram - Power Generating System

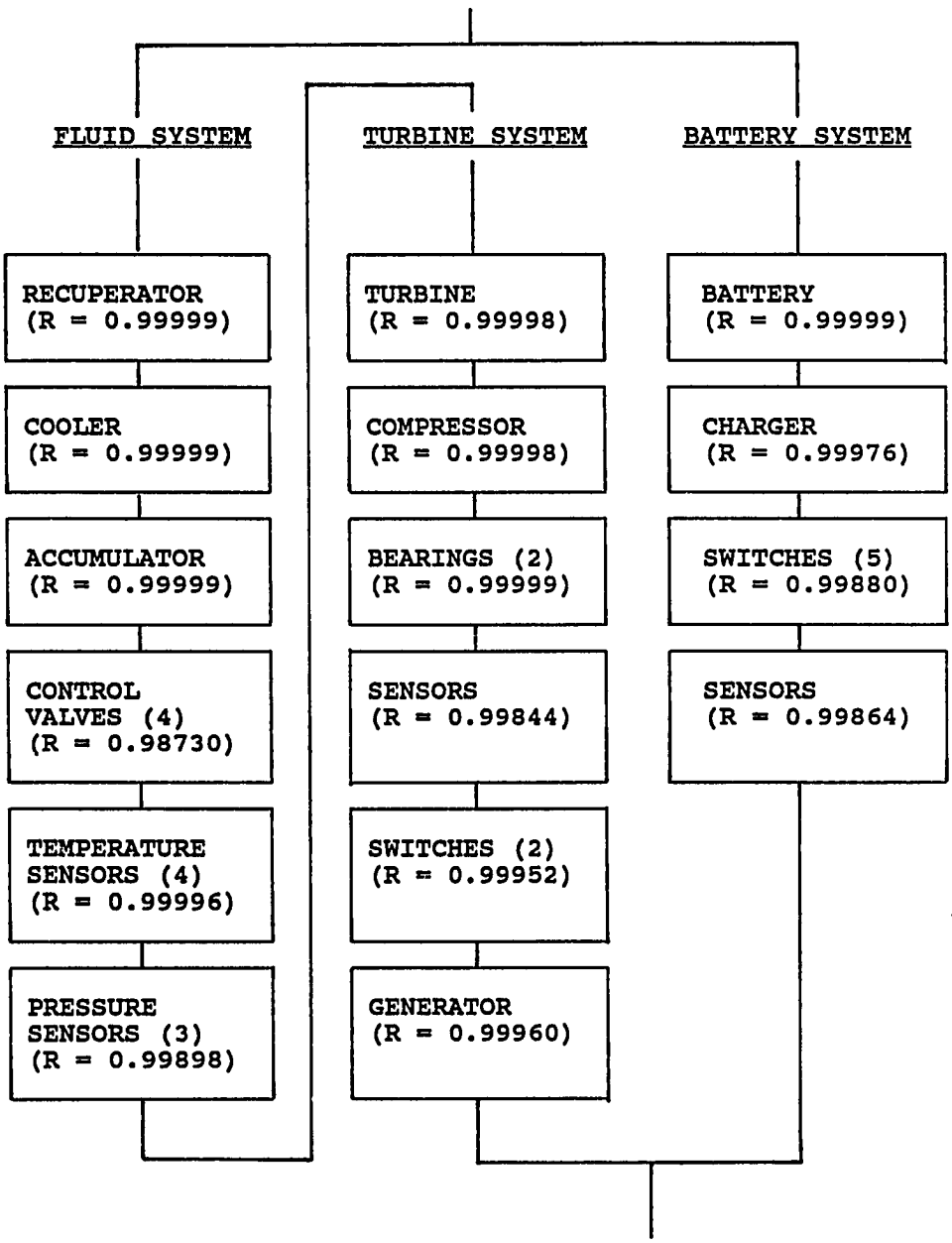

Reproduced with permission of the copyright owner. Further reproduction prohibited without permission.

Figure C.2.3. Reliability Block Diagram - Thruster System

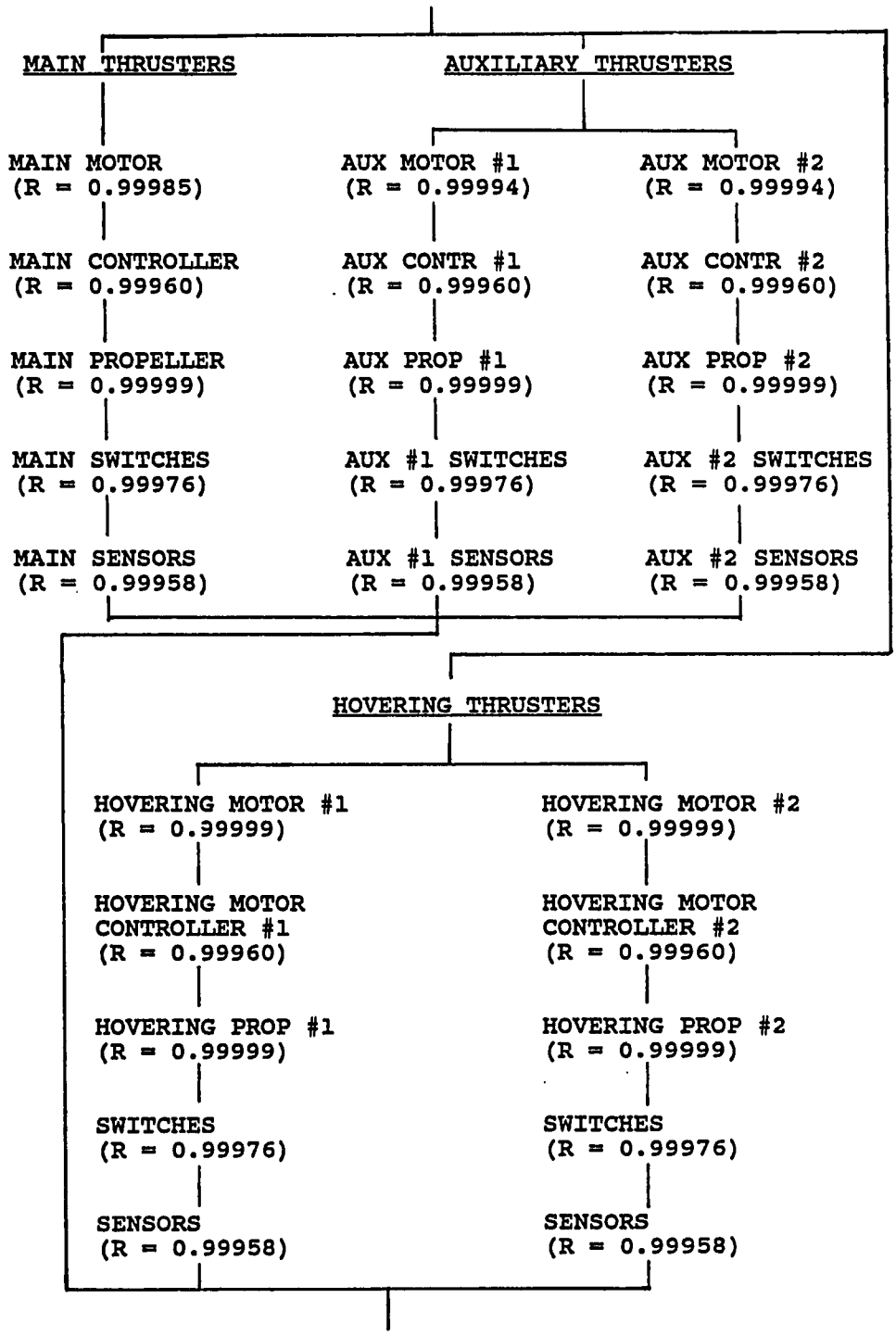

Reproduced with permission of the copyright owner. Further reproduction prohibited without permission.

Figure C.2.4. Reliability Block Diagram - Normal Propulsion Mode

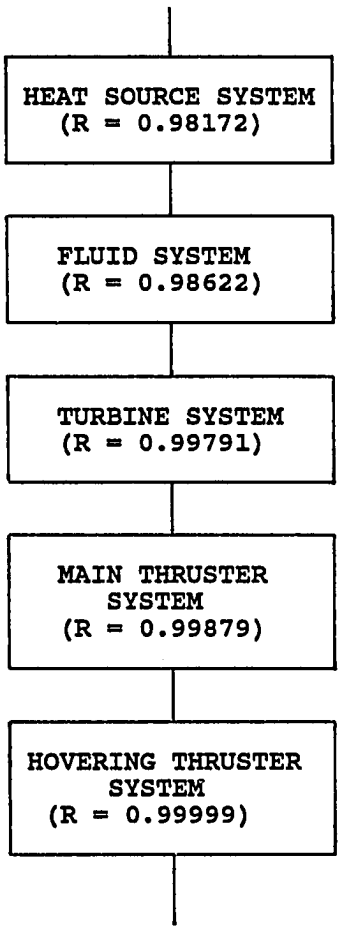

Reproduced with permission of the copyright owner. Further reproduction prohibited without permission.

Figure C.2.5. Reliability Block Diagram - Total Propulsion System

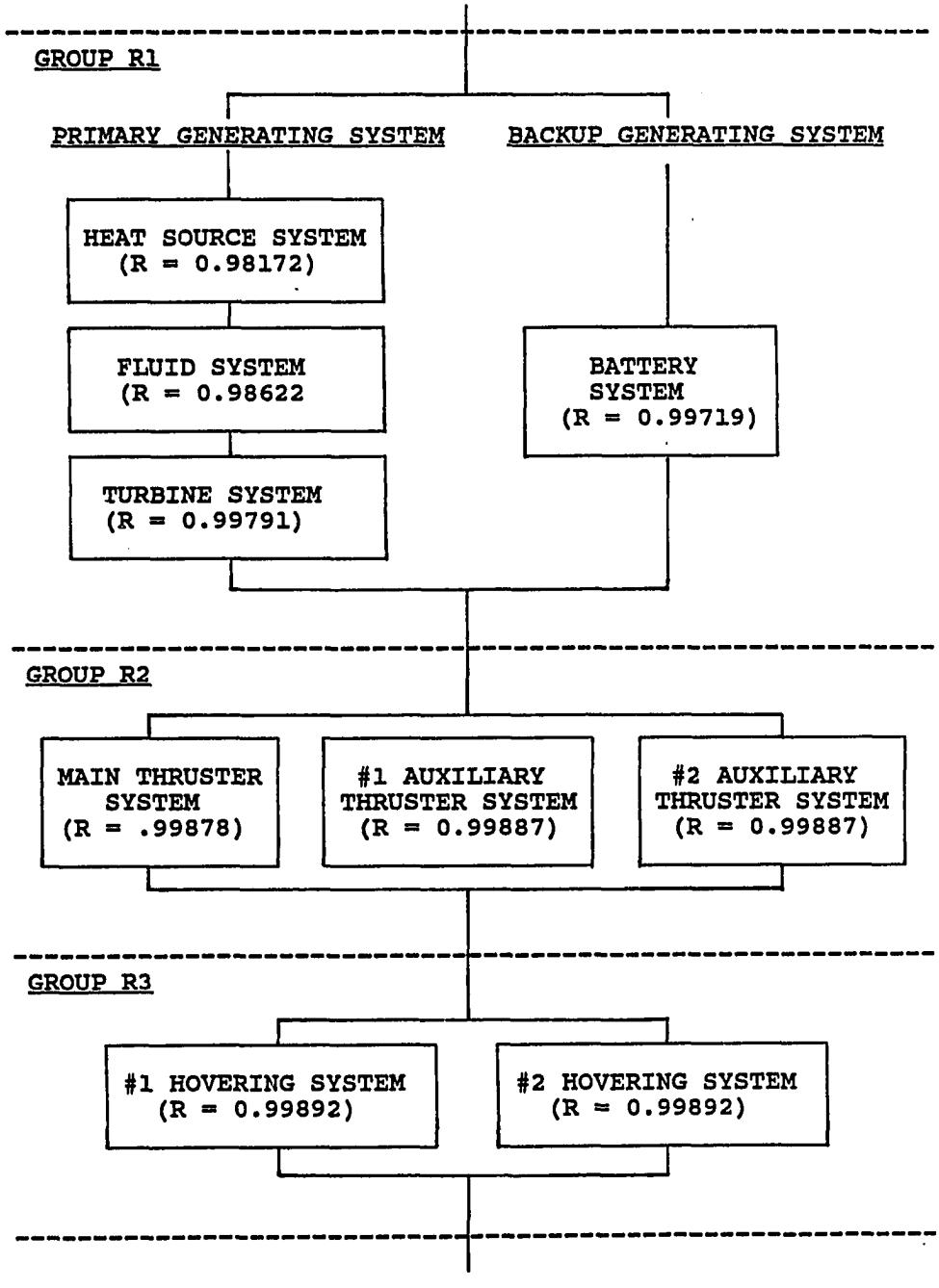

Reproduced with permission of the copyright owner. Further reproduction prohibited without permission.

C.3. Reliability Calculations

C.3.1. Systems

1. Nomenclature

R(h) = Reliability of heat source system
R(fp) = Reliability of fuel/product system
R(ox) = Reliability of oxidant system
R(pg) = Reliability of primary generating system
R(bg) = Reliability of backup generating system
R(fl) = Reliability of fluid system
R(t) = Reliability of turbine system
R(th) = Reliability of thruster system
R(mth) = Reliability of main thruster system
R(ath) = Reliability of auxiliary thruster system
R(hth) = Reliability of hovering thruster system
R(inj) = Reliability of oxidant injector valves

2. Heat Source System

$$R(h) = \prod_{i=1}^{n} R\ (\text{subsystem})_i = [R(fp)][R(ox)]$$

where:

$$R(fp) = \prod_{i=1}^{n} R\ (\text{component})_i = 0.99549$$

$$R(ox) = \prod_{i=1}^{n} R\ (\text{component})_i = [0.99781][R(inj)]$$

$$R(ox) = 0.58812 \quad \text{(with 1 injector valve)}$$

For multiple injector valves in parallel:

$$R(inj)_n = 1 - \prod_{i=1}^{n} [1 - R(inj)_i]$$

$$R(inj)_2 = 1 - [\ 1 - 0.58941\ ]^2 = 0.83142$$
$$R(inj)_3 = 1 - [\ 1 - 0.58941\ ]^3 = 0.93078$$
$$R(inj)_4 = 1 - [\ 1 - 0.58941\ ]^4 = 0.97158$$
$$R(inj)_5 = 1 - [\ 1 - 0.58941\ ]^5 = 0.98833$$

Using oxidant system with 5 injector valves:

$$R(ox) = (0.99781)(0.98833) = 0.98617$$

$$R(h) = R(fp)\ R(ox)$$
$$= (0.99549)(0.98617) = 0.98172$$

Reproduced with permission of the copyright owner. Further reproduction prohibited without permission.

3. Power Generating System

Primary Generating System:

$$R(pg) = R(fl) \times R(t) \times R(h)$$

where:

$$R(fl) = \prod_{i=1}^{n} R\ (\text{component})_i = 0.98622$$

$$R(t) = \prod_{i=1}^{n} R\ (\text{component})_i = 0.99791$$

then:

$$R(pg) = (0.98622)(0.99791)(0.98172) = 0.96617$$

Backup Generating System:

$$R(bg) = \prod_{i=1}^{n} R\ (\text{component})_i = 0.99719$$

4. Thruster System

Main Thruster System:

$$R(mth) = \prod_{i=1}^{n} R\ (\text{component})_i = 0.99878$$

Auxiliary Thruster System:

$$R(ath\ \#1) = \prod_{i=1}^{n} R\ (\text{component})_i = 0.99887$$

$$R(ath\ \#2) = \prod_{i=1}^{n} R\ (\text{component})_i = 0.99887$$

$$R(ath) = 1 - [1-R(ath\ \#1)][1-R(ath\ \#2)] = 0.99999$$

Hovering Thruster System:

$$R(hth\ \#1) = \prod_{i=1}^{n} R\ (\text{component})_i = 0.99892$$

$$R(hth\ \#2) = \prod_{i=1}^{n} R\ (\text{component})_i = 0.99892$$

$$R(hth) = 1 - [1-R(hth\ \#1)][1-R(hth\ \#2)] = 0.99999$$

Reproduced with permission of the copyright owner. Further reproduction prohibited without permission.

C.3.2. Groups

Group R1:

$$R(R1) = 1 - \prod_{i=1}^{n} (1-R_i) = 1 - [(1-R(pr))(1-R(bg))]$$
$$= 1 - [(1 - 0.96617)(1 - 0.99719)]$$
$$= 0.99991$$

Group R2:

$$R(R2) = 1 - \prod_{i=1}^{n} (1-R_i) = 1 - [(1-R(mth))(1-R(ath))]$$
$$= 1 - [(1 - 0.99878)(1 - 0.99999)]$$
$$= 0.99999$$

Group R3:

$$R(R3) = R(hth) = 1 - [(1-R(hth\ \#1)][1-R(hth\ \#2)]$$
$$= 0.99999$$

Normal Propulsion Mode:

$$R(npm) = \prod_{i=1}^{n} R_i = [R(pg)] \times [R(mth)] \times [R(hth)]$$
$$= [0.96177]\ [0.99878]\ [0.99999]$$
$$= 0.96059$$

Total Propulsion System:

$$R(tps) = \prod_{i=1}^{n} R_i = R(R1) \times R(R2) \times R(R3)$$
$$= (0.99991)\ (0.99999)\ (0.99999)$$
$$= 0.99989$$

Reproduced with permission of the copyright owner. Further reproduction prohibited without permission.

C.3.3. Criticality Calculations

The probability of occurrence of a Severity Level I failure (Catastrophic -- loss of entire propulsion system) and a Severity Level II failure (Critical -- loss of major system and likely mission abort) as defined in Figure 11 will be estimated using the component and system reliability data. In calculating the various subsystem reliabilities, only those components will be included whose failure would lead directly to failure of the entire system. The nomenclature used in Section C.3.1 will be used, but to distinguish "critical reliability" for a system from its overall reliability, the symbol CR will be used to denote critical reliability.

Critical Reliability of Systems

1. Heat Source System

   CR(h) = CR(fp) CR(ox) = (0.99902)(0.98828) = 0.98731
   CR(fp) = R(reactor) R(heat exch) = 0.99902
   CR(ox) = R(tank) R(reg vlv) R(5 inj vlv) = 0.98828

2. Primary Generating System

   CR(pg) = CR(fl) CR(t) = (0.99678)(0.99907) = 0.99585
   CR(fl) = R(recup) R(cooler) R(accum) R(CV) = 0.99678
   CR(t) = R(turb) R(comp) R(bngs) R(gen) R(sw) = 0.99907

3. Backup Generating System

   CR(bg) = R(battery) R(sw) = 0.99879

4. Main Thruster System

   CR(mth) = R(motor) R(contr) R(sw) R(prop) = 0.99920

5. Auxiliary Thruster System

   CR(ath) = 1 - [1-CR(ath #1)][1-CR(ath #2)]
   CR(ath #1) = R(motor) R(contr) R(prop) R(sw) = 0.99929
   CR(ath #2) = CR(ath #1) = 0.99929
   CR(ath) = 1 - [1-0.99929][1-0.99929] = 0.99999

Severity Level I (Catastrophic)

This level of severity entails the complete loss of all propulsion capability. The probability of such a loss can be expressed as:

P(loss I) = 1 - CR(I), where:
CR(I) = CR(thruster system) CR(power system)
CR(thruster system) = 1 - [1-CR(ath)][1-CR(mth)]
= 0.99999
CR(power system) = 1 - [1-RC(npg)][1-RC(bpg)]
= 0.99996
CR(I) = (0.99999)(0.99996) = 0.99995

Reproduced with permission of the copyright owner. Further reproduction prohibited without permission.

$$P(\text{loss I}) = 1 - 0.99995 = 0.00005 = 0.005\%$$

Based on the Figure 11 definitions:
Level of Criticality = Level E (Extremely Unlikely)

Severity Level II (Critical)

This level of severity occurs when the normal propulsion system fails and propulsion must be shifted to the emergency mode. The probability of such a loss can be expressed as:

$$P(\text{loss II}) = 1 - CR(II), \quad \text{where:}$$
$$CR(II) = CR(pg)\ CR(h)$$
$$= (0.99585)(0.98731) = 0.99832$$

$$P(\text{loss II}) = 1 - 0.99832 = 0.01678 = 1.68\%$$

Based on the Figure 11 definitions:
Level of Criticality = Level C (Occasional)

Reproduced with permission of the copyright owner. Further reproduction prohibited without permission.

APPENDIX D. PROPULSION PLANT DATA

Reproduced with permission of the copyright owner. Further reproduction prohibited without permission.

D.1. THRUSTER SYSTEM DATA

1. General Features of Thruste: Motors
   - Oil filled and pressure compensated
   - Brushless design with 1 v slip
   - Reversible rotation
   - Rated for continuous op ation
   - Ambient pressure: 0-20 0 psi
   - Ambient temperature: 0 30 C

2. Main Thruster Motor Data
   - Voltage: 240 v, 3-phas , 60 Hz
   - Synchronous Speed: 900 rpm
   - Rated Output: 15 HP
   - Static Thrust: 688 lb
   - Full load efficiency ap roximately 85%

3. Auxiliary and Hovering Thru ter Motor Data
   - Voltage: 240 v, 3-phas , 60 Hz
   - Synchronous Speed: 120 rpm
   - Rated Output: 1.0 HP
   - Static Thrust: 70 lb
   - Full load efficiency ap roximately 80%

4. General Features of Motor C ntrollers
   - Functions:
     - speed reg lation
     - commutati n control
     - 3-phase i version
     - system pr tection
   - Inverts power from 240- olt DC propulsion buss to sinusoidal 3-phase c rrent for motors
   - Full load efficiency ap roximately 90%

Reproduced with permission of the copyright owner. Further reproduction prohibited without permission.

5. Propulsion Context Thruster Data

MODE-POWER CONTEXT	MAIN THRUSTER (NOTE 1,4)	AUX THRUSTER (NOTE 1,3)	HOV THRUSTER (NOTE 2)
Normal-Full (10 kt):			
Shaft Speed (rpm)	900	---	---
Output Power (kw)	11.6		
Thrust (lb)	507		
Normal-Medium (5 kt):			
Shaft Speed (rpm)	470	1200	---
Output Power (kw)	1.6	0.8 (ea)	
Thrust (lb)	140	70 (ea)	
Normal-Minimum (3 kt):			
Shaft Speed (rpm)	300	750	1200
Output Power (kw)	0.4	0.2 (ea)	0.80 (ea)
Thrust (lb)	54	27 (ea)	70 (ea)
Emergency-Full (5 kt):			
Shaft Speed (rpm)	470	1200	---
Output Power (kw)	1.6	0.8 (ea)	
Thrust (lb)	140	70 (ea)	
Emergency-Minimum (3 kt):			
Shaft Speed (rpm)	300	750	---
Output Power (kw)	0.4	0.2 (ea)	
Thrust (lb)	54	27 (ea)	

Relationships :

1. Thrust (lb) = (SHP)(550 ft-lb/sec/hp) / V(ft/sec)

2. rpm 1 / rpm 2 = $(\text{Thrust 1} / \text{Thrust 2})^2$

NOTES:

1. Main thruster and auxiliary thrusters not operated at the same time.
2. Hovering thrusters normally operated only in positioning phase (normal, minimum power mode) and on an intermittant basis.
3. Auxiliary thrusters normally not operated in full power mode, but available as backup.
4. Main thruster normally not operated in minimum power mode but available as backup.

Reproduced with permission of the copyright owner. Further reproduction prohibited without permission.

D.2. Sensor Data

1. Sensor Identification Scheme: See Figure 4.

2. Sensor Designation and Units of Measurement:

Sensor Designation	Parameter Measured	Units of Measurement
P	Pressure	psia
T	Temperature	degrees F
L	Tank Level	% full
N	Speed	rpm
V	Voltage	volts
A	Current	amperes
B	Battery Discharge Status	kw-hr
VB	Vibration Level	% maximum
FM	Fluid Flow	lb/min
CV	Control Valve Position	open/shut
RV	Regulating Valve Position	open/shut
S	Electrical Switch Position	open/shut

Reproduced with permission of the copyright owner. Further reproduction prohibited without permission.

3. Sensor Design Values

SENSOR	NORMAL FULL	NORMAL MEDIUM	NORMAL MINIMUM	EMERG FULL	EMERG MIN
FP SYSTEM				(NOTE 1)	
T1a,T1b,T1c	1650	1650	1650		
T1d,T1e,T1f	90	90	90		
OX SYSTEM				(NOTE 1)	
T2a,T2b,T2c	60	60	60		
L2a	90	90	90		
P2b	300	300	300		
P2c	50	40	20		
S2a	open	open	open		
CV2a	open	open	open		
CV2b	shut	shut	shut		
CV2c	shut	shut	shut		
CV2d	shut	shut	shut		
CV2e	shut	shut	shut		
SU SYSTEM				(NOTE 2)	
S3a	open	open	open		
CV3a	shut	shut	shut		
NPG SYSTEM				(NOTE 1)	
T4a	1013	1013	1013		
T4b	1500	1500	1500		
T4c	296	296	296		
T4d	94	94	94		
T4e	90	90	90		
T4f	90	90	90		
P4c	60.5	12.5	6.6		
P4d	31.9	6.6	3.5		
FM4	92.3	19.6	10.0		
VB4a	90	50	20		
VB4b	90	50	20		
N4a	52,000	52,000	52,000		
CV4a	shut	shut	shut		
CV4b	shut	shut	shut		
CV4c	shut	shut	shut		
S4a	shut	shut	shut		
S4b	open	open	open		
V4a	240	240	240		
V4b	240	240	240		
V4d	240	240	240		
A4a	112	19	22.6		
A4b	108	15	18.6		
A4d	4	4	4		

Reproduced with permission of the copyright owner. Further reproduction prohibited without permission.

SENSOR	NORMAL FULL	NORMAL MEDIUM	NORMAL MINIMUM	EMERG FULL	EMERG MIN
BPG SYSTEM	(NOTE 3)				
T5a	70	70	70	110	110
B5a	1	1	1	15	15
V5a	240	240	240	240	240
A5a	0	0	0	19	7.8
S5a	open	open	open	shut	shut
S5b	open	open	open	open	open
S5c	open	open	open	shut	shut
S5d	open	open	open	open	open
S5e	open	open	open	open	open
MTH SYSTEM					
T6a	90	90	80	90	80
V6a	240	240	0	240	0
A6a	108	15	0	15	0
N6a	900	470	0	900	0
S6a	shut	shut	shut	shut	open
HTH SYSTEM	(NOTE 4)				
S7a, S7b	open	open	shut	open	open
V7a, V7b	0	0	240	0	0
A7a, A7b	0	0	7.5	0	0
N7a, N7b	0	0	1200	0	0
T7a, T7b	80	80	90	80	80
ATH SYSTEM	(NOTE 5)				
S8a, S8b	open	open	shut	open	shut
V8a, V8b	0	0	240	0	shut
A8a, A8b	0	0	1.8	0	1.8
N8a, N8b	0	0	750	0	750
T8a, T8b	80	80	90	80	90

NOTES:

1. In emergency mode, FP System, Ox System and NPG System are in a standby status -- design data is not of value

2. The SU System is used for initial plant startup only -- not activated during a mission.

3. The BPG System is in a standby status in the normal propulsion mode and operational in the emergency mode.

4. The HTH System is normally used only in the normal mode - minumum power.

5. The ATH System is normally used at minimum power only.

Reproduced with permission of the copyright owner. Further reproduction prohibited without permission.

APPENDIX E. COMPUTER PROGRAM INFORMATION AND DATA

Reproduced with permission of the copyright owner. Further reproduction prohibited without permission.

E.1. Description of Computer Programs

Program POWER-1. This program is written in the BASIC language and is used to calculate the shaft power required to propel a torpedo-shaped vehicle. It has the following input and output data:

INPUTS	OUTPUTS
vehicle velocity	drag of hull
length overall	shaft power for hull
length of parallel midbody	total vehicle drag
diameter	total vehicle power
propulsive coefficient	
sea water temperature	

Program POWER-2. This program is written in BASIC and is used to calculate the shaft power for a torpedo-shaped vehicle based on empirically derived results [85]. It assumes a propulsive coefficient of 0.85, and has the following inputs and outputs:

INPUTS	OUTPUTS
vehicle length	shaft power
vehicle diameter	
vehicle velocity	

Program HOV-PWR-1. This program is written in BASIC and calculates the shaft power for a cylindrically shaped vehicle moving vertically, with its longitudinal axis horizontal, for the positioning or hovering phase. It has the following inputs and outputs:

INPUTS	OUTPUTS
vehicle wetted surface area	vehicle drag
vehicle diameter	shaft power
propulsive coefficient	
vehicle velocity	
sea water temperature	

Program BRAYTON. This program is written in BASIC and calculates various system parameters for a closed Brayton cycle using a monatomic gas as a working fluid. It performs a heat balance, and has the following input and output data:

INPUTS	OUTPUTS
net output power required	turbine outlet temp
turbine inlet temp	comp outlet temp
turbine efficiency	heat source inlet temp
comp inlet temp	cooler inlet temp
comp press ratio	turbine press ratio

Reproduced with permission of the copyright owner. Further reproduction prohibited without permission.

INPUTS	OUTPUTS
comp efficiency	comp inlet press
fluid bleed for bearings	turbine outlet press
mechanical losses (%)	mechanical loss (power)
recuperator eff	heat input
turbine press ratio/ comp press ratio	heat out
fluid mol wt	compressor flow
fluid sp heat ratio	turbine flow
	compressor work
	turbine work
	system thermal eff

Program PPM. This program is written in Common LISP and is used to monitor and supervise the operation of the propulsion plant, as well as to simulate its operation. This program contains the PPM knowledge base which supports its designed functions of monitoring, diagnostics, and control. It also contains the PPM data base in the form of a frame structure. The program is broken down into several separate files, which are described below.

File "ppm-fr": This file contains various functions set up to establish a frame system for containing system and sensor data, and is based on the system developed by Winston and Horn [99].

File "ppm-sim": This file contains an introduction to the PPM simulator and the basic instructions which allow the user to simulate the operation of the propulsion plant and the PPM system.

File "ppm-eval": This file contains functions which are used to evaluate sensor data and classify the data with respect to normal or abnormal status. It processes abnormal data to the appropriate knowledge base for diagnosis and action.

File "kb-hss": This file contains the knowledge base for the Heat Source System which supports diagnostic and control functions.

File "kb-pgs": This file contains the knowledge base for the Power Generating System which supports diagnostic and control functions.

File "kb-ts": This file contains the knowledge base for the Thruster System which supports diagnostic and control functions.

File "ppm-def": This file contains definitions which provide for ease of access to the frame data.

Reproduced with permission of the copyright owner. Further reproduction prohibited without permission.

File "ppm-rmv.dat": This file contains functions used to remove data from the frame structure.

File "ppm-full.dat": This file places data in frames for each system and each sensor for the normal mode - full power context.

File "ppm-med.dat": This file places data in frames for each system and each sensor for the normal mode - medium power context.

File "ppm-min.dat": This file places data in frames for each system and each sensor for the normal mode - minimum power context.

File "ppm-emer.dat": This file places data in frames for each system and each sensor for the emergency mode - full and minimum power contexts.

Reproduced with permission of the copyright owner. Further reproduction prohibited without permission.

E.2. PPM Classification Rules

The PPM classification rules are used to classify sensor data for the following areas:

(1) Type of sensor (e.g., temperature, pressure)
(2) System where sensor is installed (e.g., oxidant)
(3) Status (GREEN, RED, YELLOW, OOC)

Within the YELLOW and RED status classification, the sensor data may also be classified as HIGH or LOW, depending on which end of the tolerance limit the particular reading occurs. Switch position sensors and valve position sensors have status classifications of either GREEN or RED.

The rules used to classify status are based on the type of sensor and the design value for the sensor reading for the existing power-mode context. The RED and YELLOW limits are determined by multiplying the design value for that context by a sensor factor. The sensor factors used by the PPM system are given below.

Sensor Factors

Type Sensor	HIGH-Y	HIGH-RED	LOW-Y	LOW-RED
Pressure	1.10	1.20	0.90	0.80
Temperature	1.05	1.10	0.95	0.80
Speed (rpm)	1.10	1.20	0.90	0.80
Tank Level	1.05	1.10	0.20	0.10
Voltage	1.05	1.10	0.95	0.90
Current	1.10	1.20	0.90	0.80
Vibration	1.20	1.40	0.50	0.20
Flow	1.10	1.20	0.90	0.80
Battery Status	10kw-hr	15kw-hr	(See Note 1)	
Valve Position	(See Note 2)			
Switch Position	(See Note 2)			

NOTE:

1. Battery discharge is in units of kw-hr, and is applicable only for the high status.
2. Valve and switch position status is GREEN when in the proper position and RED when out of the proper position
3. OOC status is determined by the PPM system and is assigned to a sensor which has been evaluated as having malfunctioned, or "out of commission".

Reproduced with permission of the copyright owner. Further reproduction prohibited without permission.

E.3. PPM Knowledge Base Logic

The code in the PPM knowledge base for the heat source system ("kb-hss"), the power generating system ("kb-pgs") and the thruster system ("kb-ts") is parsed and comments added to provide a readable description of the logic used in the rule base to diagnose anomalies and initiate corrective action.

Variables used to represent sensor status consist of the sensor designation followed by the letters "STAT". Variables used to represent simulated values of sensors consist of the sensor designation followed by "SVAL", or in the case of valve positions or switch positions, the sensor designation followed by "POS". For example:

```
T1FSTAT = status of temperature sensor T1f
P2BSVAL = simulated value of pressure sensor P2b
S3APOS  = simulated position of switch S3a
CV2BPOS = simulated position of control valve CV2b
```

E.3.1. Rules for File "kb-hss"

```
-----------------------------------------------------------------------
Rules in function GET-FP-RULES (primary rule set)

IF  the SENSOR is equal to T1F
OR the SENSOR is equal to T1E
OR the SENSOR is equal to T1D
AND the STATUS is equal to HIGH-RED
THEN  go to major rule:
   TAKE-ACTION-REACTOR-LEAK

IF  the STATUS is equal to HIGH-RED
AND the SENSOR is equal to T1C
OR the SENSOR is equal to T1B
OR the SENSOR is equal to T1A
THEN go to major rule:
   TAKE-ACTION-REACTOR-HOT

IF  the STATUS is equal to LOW-RED
AND the SENSOR is equal to T1C
OR the SENSOR is equal to T1B
OR the SENSOR is equal to T1A
THEN  go to major rule:
   TAKE-ACTION-REACTOR-COLD

IF  no other data
THEN conclude:  APPLICABLE RULE NOT IDENTIFIED -- NEED MORE DATA

-----------------------------------------------------------------------
Rules in function GET-OX-RULES  (primary rule set)

IF  the STATUS is equal to LOW-RED
AND the SENSOR is equal to L2A
THEN  go to major rule:
   TAKE-ACTION-LOW-TANK-LEVEL

IF  the STATUS is equal to LOW-RED
AND the SENSOR is equal to FM2
```


Reproduced with permission of the copyright owner. Further reproduction prohibited without permission.

```
THEN  go to major rule:
   TAKE-ACTION-LOW-OX-FLOW

IF  the STATUS is equal to HIGH-RED
AND the SENSOR is equal to T2A
THEN  go to major rule:
   TAKE-ACTION-HIGH-TANK-TEMP

IF  the STATUS is equal to LOW-RED
AND the SENSOR is equal to P2B
THEN  go to major rule:
   TAKE-ACTION-LOW-TANK-PRESS

IF  the STATUS is equal to LOW-RED
AND the SENSOR is equal to P2C
THEN  go to major rule:
   TAKE-ACTION-LOW-PPG-PRESS

IF  no other data
THEN  conclude: APPLICABLE RULE NOT IDENTIFIED -- NEED MORE DATA

-----------------------------------------------------------------------
Rules in function GET-SU-RULES (primary rule set)

IF  the S3APOS is equal to SHUT
AND the SENSOR is equal to S3A
THEN  go to major rule:
   TAKE-ACTION-SU-HTR

IF  the CV3APOS is equal to OPEN
AND the SENSOR is equal to CV3A
THEN  go to major rule:
   TAKE-ACTION-SU-VALVE

IF no other data
THEN conclude:  APPLICABLE RULE NOT IDENTIFIED -- NEED MORE DATA

-----------------------------------------------------------------------
Rules in function TAKE-ACTION-REACTOR-LEAK (major rule)

PRELIMINARY DIAGNOSIS:  possible reactor leak

IF  the T1FSTAT is equal to HIGH-RED
AND the T1ESTAT is equal to HIGH-RED
  OR the T1FSTAT is equal to HIGH-RED
  AND the T1DSTAT is equal to HIGH-RED
    OR the T1ESTAT is equal to HIGH-RED
    AND the T1DSTAT is equal to HIGH-RED
THEN  diagnosis verified
    CAUSE: leak in reactor vessel
    VERIFIED BY:  two out of three temp sensors for containment
    ACTION: 1. shut down normal power generating system
            2. shift to backup power generating system
            3. shift propulsion to emergency-full
            4. terminate mission

IF  the T1FSTAT is equal to GREEN
AND the T1ESTAT is equal to GREEN
AND the T1DSTAT is equal to HIGH-RED
THEN
    CAUSE:  sensor T1D malfunction
```


Reproduced with permission of the copyright owner. Further reproduction prohibited without permission.

```
    ACTION:  place sensor T1D on ooc-list

IF  the T1FSTAT is equal to GREEN
AND the T1DSTAT is equal to GREEN
AND the T1ESTAT is equal to HIGH-RED
THEN
    CAUSE:  sensor T1E malfunction
    ACTION: place sensor T1E on ooc-list

IF  the T1ESTAT is equal to GREEN
AND the T1DSTAT is equal to GREEN
AND the T1FSTAT is equal to HIGH-RED
THEN
    CAUSE:  sensor T1F malfunction
    ACTION: place sensor T1F on ooc-list

-----------------------------------------------------------------------
Rules in function TAKE-ACTION-REACTOR-COLD (major rule)

PRELIMINARY DIAGNOSIS:  low reactor temperature

IF  the CV2CPOS is equal to SHUT
AND the CV2DPOS is equal to SHUT.
AND the CV2BPOS is equal to SHUT
AND the CV2APOS is equal to SHUT
THEN  diagnosis verified
    CAUSE:  all injector valves shut
    ACTION: open injector valve CV2A

IF  the RV2BPOS is equal to SHUT
AND the RV2APOS is equal to SHUT .
THEN  diagnosis verified
    CAUSE:  oxidant regulating valves RV2A and RV2B both shut
    ACTION: open regulating valve RV2A

IF  the FM2STAT is equal to LOW-RED
THEN  go to major rule:
   TAKE-ACTION-LOW-OX-FLOW

IF  the T1CSTAT is equal to GREEN
AND the T1BSTAT is equal to GREEN
AND the T1ASTAT is equal to LOW-RED
THEN
    CAUSE:  sensor T1A malfunction
    ACTION: place sensor T1A on ooc-list

IF  the T1CSTAT is equal to GREEN
AND the T1ASTAT is equal to GREEN
AND the T1BSTAT is equal to LOW-RED
THEN
    CAUSE:  sensor T1B malfunction
    ACTION: place sensor T1B on ooc-list

IF  the T1BSTAT is equal to GREEN
AND the T1ASTAT is equal to GREEN
AND the T1CSTAT is equal to LOW-RED
THEN
    CAUSE:  sensor T1C malfunction
    ACTION: place sensor T1C on ooc-list

-----------------------------------------------------------------------
```


Reproduced with permission of the copyright owner. Further reproduction prohibited without permission.

Rules in function TAKE-ACTION-REACTOR-HOT (major rule)

PRELIMINARY DIAGNOSIS: high reactor temperature

```
IF  the CV2BPOS is equal to OPEN
AND the CV2APOS is equal to OPEN
THEN  diagnosis verified
    CAUSE:  injector valves cv2a and cv2b open
    ACTION: shut valve cv2b

IF  the CV2CPOS is equal to OPEN
AND the CV2APOS is equal to OPEN
THEN  diagnosis verified
    CAUSE:  injector valves cv2a and cv2c open
    ACTION: shut valve cv2c

IF  the CV2DPOS is equal to OPEN
AND the CV2APOS is equal to OPEN
THEN  diagnosis verified
    CAUSE:  injector valves cv2a and cv2d open
    ACTION: shut valve cv2d

IF  the CV2EPOS is equal to OPEN
AND the CV2APOS is equal to OPEN
THEN  diagnosis verified
    CAUSE: injector valves cv2a and cv2e open
    ACTION: shut valve cv2e

IF  the RV2BPOS is equal to OPEN
AND the RV2APOS is equal to OPEN
AND the FM2STAT is equal to HIGH-Y
   OR the FM2STAT is equal to HIGH-RED
THEN  diagnosis verified
    CAUSE: high oxidant flow: both regulator valves open
    ACTION: shut valve rv2b

IF  the RV2BPOS is equal to SHUT
AND the RV2APOS is equal to OPEN
AND  the FM2STAT is equal to HIGH-Y
   OR the FM2STAT is equal to HIGH-RED
THEN  diagnosis verified
    CAUSE: high oxidant flow - malfunction in valve RV2A
    ACTION: 1. open valve rv2b
            2. shut valve rv2a
            3. place valve rv2a on ooc-list

IF  the RV2BPOS is equal to OPEN
AND the RV2APOS is equal to SHUT
AND the FM2STAT is equal to HIGH-Y
   OR the FM2STAT is equal to HIGH-RED
THEN  diagnosis verified
    CAUSE: high oxidant flow - malfunction in valve RV2B
    ACTION: 1. open valve rv2a
            2. shut valve rv2b
            3. place valve rv2b on ooc-list

IF  the S3APOS is equal to SHUT
THEN  diagnosis verified
    CAUSE:  reactor vessel heater switch shut
    ACTION: open heater switch S3A
```


Reproduced with permission of the copyright owner. Further reproduction prohibited without permission.

```
IF  the T1CSTAT is equal to GREEN
AND the T1BSTAT is equal to GREEN
AND the T1ASTAT is equal to HIGH-RED
THEN
    CAUSE: sensor T1A malfunction
    ACTION: place sensor T1A on ooc-list

IF  the T1CSTAT is equal to GREEN
AND the T1ASTAT is equal to GREEN
AND the T1BSTAT is equal to HIGH-RED
THEN
    CAUSE: sensor T1B malfunction
    ACTION: place sensor T1B on ooc-list

IF  the T1BSTAT is equal to GREEN
AND the T1ASTAT is equal to GREEN
AND the T1CSTAT is equal to HIGH-RED
THEN
    CAUSE:  sensor T1C malfunction
    ACTION: place sensor T1C on ooc-list

IF no other data
THEN  conclude:  unable to identify  at this time
      increase monitor rate

-----------------------------------------------------------------------
Rules in function TAKE-ACTION-LOW-TANK-LEVEL (major rule)

PRELIMINARY DIAGNOSIS:  low level in oxidant storage tank

IF  the T2ASTAT is equal to HIGH-RED
AND the S2APOS is equal to SHUT
THEN  diagnosis verified
    CAUSE:  oxidant overheated and vaporized in tank
    ACTION: de-energize tank heater -- open switch S2A

IF  the RV2BPOS is equal to OPEN
  OR the RV2APOS is equal to OPEN
AND the T2ASTAT is equal to GREEN
AND the FM2STAT is equal to LOW-RED
THEN  diagnosis verified
    CAUSE:  oxidant depletion
    ACTION: 1. place normal power generating system on ooc-list
            2. shift to backup power generating system
            3. shift propulsion to emergency-full context
            4. terminate mission

IF  the T2ASTAT is equal to GREEN
AND the FM2STAT is equal to GREEN
AND the T2BSTAT is equal to GREEN
AND  the S2APOS is equal to OPEN
THEN  diagnosis partially verified
    CAUSE:  possible depletion of oxidant
    VERIFIED BY: need more data for  verification
    ACTION: 1. increase monitor rate
            2. get oxidant flow data
               IF  FM2STAT is equal to GREEN
               AND FM2SVAL is steady
               THEN  conclude
                  CAUSE:  sensor L2A malfunction
                  ACTION:  place sensor L2A on ooc-list
```


Reproduced with permission of the copyright owner. Further reproduction prohibited without permission.

```
                IF  FM2STAT is decreasing
                THEN  diagnosis verified
                    CAUSE:  oxidant being depleted
                    ACTION: 1. place normal power gen system ooc
                            2. shift to backup power gen system
                            3. shift propulsion to emergency-full
                            4. terminate mission

IF no other data
THEN conclude:  unable to identify at this time
     increase monitor rate

-----------------------------------------------------------------------
Rules in function TAKE-ACTION-LOW-OX-FLOW  (major rule)

PRELIMINARY DIAGNOSIS:  low oxidant flow

IF   LOW-RED is equal to T1ASTAT
THEN  go to primary rule:
   GET-FP-RULES

IF   LOW-RED is equal to T1BSTAT
THEN  go to primary rule:
   GET-FP-RULES

IF   LOW-RED is equal to T1CSTAT
THEN  go to primary rule:
   GET-FP-RULES

IF   LOW-RED is equal to L2ASTAT
THEN  go to major rule:
   TAKE-ACTION-LOW-TANK-LEVEL

IF   LOW-RED is equal to P2BSTAT
THEN  go to major rule:
   TAKE-ACTION-LOW-TANK-PRESS

IF   SHUT is equal to RV2BPOS
AND  SHUT is equal to RV2APOS
THEN  diagnosis verified
    CAUSE:  both oxidant regulator valves shut
    ACTION:  open regulator valve RV2A

IF  SHUT is equal to RV2BPOS
AND  RV2ASTAT is equal to OOC
THEN  diagnosis verified
    CAUSE:  one regulator valve ooc - one valve shut
    ACTION: open regulator valve RV2B

IF  SHUT is equal to RV2APOS
AND  OOC is equal to RV2BSTAT
THEN  diagnosis verified
    CAUSE: one regulator valve ooc - one valve shut
    ACTION: open regulator valve RV2A

IF   P2BSTAT is equal to GREEN
AND  P2CSTAT is equal to GREEN
AND  RV2BPOS is equal to OPEN
   OR  RV2APOS is equal to OPEN
THEN  diagnosis verified
```


Reproduced with permission of the copyright owner. Further reproduction prohibited without permission.

```
    CAUSE:  probable clogged injector valve
    ACTION: go to action rule SHIFT-TO-NEXT-INJECTOR

IF   RV2BPOS is equal to OPEN
AND  P2BSTAT is equal to GREEN
AND  P2CSTAT is equal to LOW-RED
AND  RV2ASTAT is equal to OOC
   OR  RV2APOS is equal to SHUT
THEN diagnosis verified
    CAUSE:   malfunction - regulator valve RV2B
    ACTION: 1. shift to regulator valve RV2A
            2. place regulator valve RV2B on ooc-list

IF  RV2APOS is equal to OPEN
AND P2BSTAT is equal to GREEN
AND P2CSTAT is equal to LOW-RED
AND RV2BSTAT is equal to OOC
   OR  RV2BPOS is equal to SHUT
THEN  diagnosis verified
    CAUSE:   malfunction - regulator valve RV2A
    ACTION: 1. shift to regulator valve RV2B
            2. place regulator valve RV2A on ooc-list

IF no other data
THEN
    CAUSE:   probable flowmeter FM2 maloperation
    ACTION:  1. place flowmeter FM2 on ooc-list

-----------------------------------------------------------------------
Rules in function SHIFT-TO-NEXT-INJECTOR  (action rule)

DIAGNOSIS:  oxidant injector is clogged -- shift to next injector

IF   CV2BPOS is equal to SHUT
AND  CV2APOS is equal to OPEN
THEN
   open CV2b, shut CV2a, place CV2a on ooc-list

IF   CV2ASTAT is equal to OOC
AND  CV2CPOS is equal to SHUT
AND  CV2BPOS is equal to OPEN
THEN
   shut CV2b, open CV2c, place CV2b on ooc-list

IF   CV2BSTAT is equal to OOC
AND  CV2ASTAT is equal to OOC
AND  CV2DPOS is equal to SHUT
AND  CV2CPOS is equal to OPEN
THEN
   shut CV2c, open CV2d, place CV2c on ooc-list

IF   CV2CSTAT is equal to OOC
AND  CV2BSTAT is equal to OOC
AND  CV2ASTAT is equal to OOC
AND  CV2EPOS is equal to SHUT
AND  CV2DPOS is equal to OPEN
THEN
   shut CV2d, open CV2e, place CV2d on ooc-list

IF   CV2DSTAT is equal to OOC
AND  CV2CSTAT is equal to OOC
```


Reproduced with permission of the copyright owner. Further reproduction prohibited without permission.

```
AND  CV2BSTAT is equal to OOC
AND  CV2ASTAT is equal to OOC
AND  CV2EPOS is equal to OPEN
THEN
   conclude      ALL INJECTORS VERIFIED OOC
                 NORMAL POWER GENERATING SYSTEM OOC
   take action   SHIFT TO EMERGENCY FULL PROPULSION CONTEXT
```

Rules in function TAKE-ACTION-HIGH-TANK-TEMP (major rule)

```
PRELIMINARY DIAGNOSIS:  high temperature in oxidant storage tank

IF   LOW-RED is equal to L2ASTAT
THEN  go to major rule:
   TAKE-ACTION-LOW-TANK-LEVEL

IF   SHUT is equal to S2APOS
THEN  diagnosis verified
    CAUSE:  oxidant tank heater energized
    ACTION: de-energize heater -- open switch S2A

IF   HIGH-Y is equal to T2CSTAT
  OR   HIGH-RED is equal to T2CSTAT
THEN  diagnosis verified
    VERIFIED BY:  high oxidant piping temp
    CAUSE:  unable to identify at this time
    ACTION: increase monitor rate
IF no other data
THEN  conclude
    CAUSE:   probable sensor malfunction
    ACTION: place sensor P2B on ooc-list
```

Rules in function TAKE-ACTION-LOW-TANK-PRESS (major rule)

```
PRELIMINARY DIAGNOSIS:  low pressure in oxidant storage tank

IF  L2ASTAT is equal to LOW-YELLOW
   OR  L2ASTAT is equal to LOW-RED
THEN   go to major rule:
   TAKE-ACTION-LOW-TANK-LEVEL

IF   T2ASTAT is equal to LOW-RED
AND  S2APOS is equal to OPEN
AND  L2ASTAT is equal to GREEN
THEN  diagnosis verified
    CAUSE:  low oxidant tank temperature
    ACTION: energize tank heater -- shut switch S2A

IF   P2CSTAT is equal to GREEN
AND  FM2STAT is equal to GREEN
AND  L2ASTAT is equal to GREEN
THEN
    CAUSE:  sensor P2B malfunction
    ACTION: place sensor P2B on ooc-list

IF no other data
THEN
     conclude:  unable to identify
     increase monitor rate
```


Reproduced with permission of the copyright owner. Further reproduction prohibited without permission.

```
-----------------------------------------------------------------
Rules in function TAKE-ACTION-LOW-PPG-PRESS (major rule)

PRELIMINARY DIAGNOSIS:  low oxidant pressure in piping system

IF   FM2STAT is equal to LOW-RED
THEN  go to major rule:
   TAKE-ACTION-LOW-OX-FLOW

IF   P2BSTAT is equal to LOW-RED
THEN  go to major rule:
   TAKE-ACTION-LOW-TANK-PRESS

IF   P2BSTAT is equal to GREEN
AND  T2CSTAT is equal to GREEN
AND  FM2STAT is equal to GREEN
THEN
    CAUSE:  sensor P2C malfunction
    ACTION:  place sensor P2C on ooc-list

IF no other data
THEN
     conclude:  unable to identify
     increase monitor rate
-----------------------------------------------------------------
```


Reproduced with permission of the copyright owner. Further reproduction prohibited without permission.

E.3.2. Rules for File "kb-pgs"

```
---------------------------------------------------------------------
Rules in function GET-NPG-RULES  (primary rule set)

IF  the STATUS is equal to HIGH-RED
AND the SENSOR is equal to VB4A
THEN  go to major rule:
   TAKE-ACTION-VIB

IF  the STATUS is equal to HIGH-RED
AND the SENSOR is equal to VB4B
THEN  go to major rule:
   TAKE-ACTION-VIB

IF  the SENSOR is equal to T4F
  OR the SENSOR is equal to T4E
AND the STATUS is equal to HIGH-RED
THEN go to major rule:
   TAKE-ACTION-HOT-BEARING

IF  the STATUS is equal to LOW-RED
AND the SENSOR is equal to FM4
THEN  go to major rule:
   TAKE-ACTION-LOW-WF-FLOW

IF  the STATUS is equal to HIGH-RED
AND the SENSOR is equal to FM4
THEN  go to major rule:
   TAKE-ACTION-HIGH-WF-FLOW

IF  the STATUS is equal to HIGH-RED
AND the SENSOR is equal to T4B
THEN  go to major rule
   TAKE-ACTION-HIGH-TIT

IF  the STATUS is equal to LOW-RED
AND the SENSOR is equal to T4B
THEN  go to major rule:
   TAKE-ACTION-LOW-TIT

IF  the STATUS is equal to HIGH-RED
AND the SENSOR is equal to T4D
THEN  go to major rule
   TAKE-ACTION-HIGH-CIT

IF  the STATUS is equal to LOW-RED
AND the SENSOR is equal to T4D
THEN  go to major rule
   TAKE-ACTION-LOW-CIT

IF  the STATUS is equal to HIGH-RED
  OR the STATUS is equal to LOW-RED
AND the SENSOR is equal to N4A
THEN  go to major rule
   TAKE-ACTION-TURBINE-RPM

IF  the STATUS is equal to LOW-RED
AND the SENSOR is equal to P4C
```


Reproduced with permission of the copyright owner. Further reproduction prohibited without permission.

```
THEN  go to major rule
   TAKE-ACTION-LOW-COP

IF  the STATUS is equal to HIGH-RED
  OR the STATUS is equal to LOW-RED
AND the SENSOR is equal to V4A
THEN  go to major rule
   TAKE-ACTION-GEN-VOLTAGE

IF  the STATUS is equal to HIGH-RED
  OR the STATUS is equal to LOW-RED
AND the SENSOR is equal to A4A
THEN  go to major rule
   TAKE-ACTION-GEN-CURRENT

IF no other data
THEN  conclude:  major rule not identified -- need more data

-----------------------------------------------------------------------
Rules in function GET-BPG-RULES  (primary rule set)

IF  the STATUS is equal to HIGH-RED
AND the SENSOR is equal to B5A
THEN  go to major rule:
   TAKE-ACTION-BATTERY-HIGH-KW

IF  the STATUS is equal to HIGH-RED
AND the SENSOR is equal to T5A
THEN  go to major rule:
   TAKE-ACTION-BATTERY-HIGH-TEMP

IF  the STATUS is equal to LOW-RED
AND the SENSOR is equal to T5A
THEN  go to major rule:
   TAKE-ACTION-BATTERY-LOW-TEMP

IF  the S5BPOS is equal to SHUT
   AND the SENSOR is equal to S5B
THEN  go to major rule:
   TAKE-ACTION-STARTER-ENERGIZED

IF  the S4BPOS is equal to SHUT
AND the S5EPOS is equal to SHUT
AND the S5DPOS is equal to SHUT
THEN  go to major rule:
   TAKE-ACTION-CHARGER-ENERGIZED

IF  the STATUS is equal to LOW-RED
AND the SENSOR is equal to V5A
THEN  go to major rule:
   TAKE-ACTION-BATTERY-LOW-VOLTAGE

IF  the STATUS is equal to HIGH-RED
AND the SENSOR is equal to V5A
THEN  go to major rule:
   TAKE-ACTION-BATTERY-HIGH-VOLTAGE

IF  the STATUS is equal to HIGH-RED
AND the SENSOR is equal to A5A
THEN  go to major rule:
   TAKE-ACTION-BATTERY-HIGH-CURRENT
```


Reproduced with permission of the copyright owner. Further reproduction prohibited without permission.

```
IF  no other data
THEN  conclude: major rule not identified -- need more data

-----------------------------------------------------------------
Rules in function TAKE-ACTION-VIB  (major rule)

PRELIMINARY DIAGNOSIS:  excessive vibration in normal power unit

IF  the MEDIUM is equal to POWER
AND the NORMAL is equal to MODE
  OR the FULL is equal to POWER
  AND the NORMAL is equal to MODE
THEN
    CAUSE:  possible high vibration
    ACTION: 1. reduce power level and evaluate
       IF  vibration is equal to GREEN
       THEN  remain in reduced power condition
       ELSE IF vibration is equal to HIGH-RED
            THEN  diagnosis verified
              ACTION:  1. place normal power gen system ooc
                       2. shift to emergency-full context
                       3. terminate mission

-----------------------------------------------------------------
Rules in function TAKE-ACTION-HOT-BEARING  (major rule)

PRELIMINARY DIAGNOSIS:  excessive bearing temp

IF the POWER is equal to MEDIUM
AND the MODE is equal to NORMAL
  OR the POWER is equal to FULL
  AND the MODE is equal to NORMAL
THEN
    ACTION:  reduce power and evaluate bearing temp
       IF bearing temp is reduced to HIGH-Y or GREEN status
       THEN  remain in reduced power condition
       IF bearing temp remains HIGH-RED status and not decreasing
       THEN
          ACTION: 1. place normal power gen system ooc
                  2. shift to backup power gen system
                  3. shift to emergency-full context
                  4. terminate mission

-----------------------------------------------------------------
Rules in function TAKE-ACTION-TURBINE-RPM  (major rule)

PRELIMINARY DIAGNOSIS:  turbine speed out of tolerance

IF  the FM4STAT is equal to LOW-RED
AND the N4ASTAT is equal to LOW-RED
THEN  diagnosis verified
  VERIFIED BY:  low flow of working fluid
  ACTION: go to major rule:
          TAKE-ACTION-LOW-WF-FLOW

IF  the FM4STAT is equal to HIGH-RED
AND the N4ASTAT is equal to HIGH-RED
THEN  diagnosis verified
  VERIFIED BY:  high flow of working fluid
  ACTION:  go to major rule:
```


Reproduced with permission of the copyright owner. Further reproduction prohibited without permission.

```
          TAKE-ACTION-HIGH-WF-FLOW

IF  the V4ASTAT is equal to HIGH-RED
AND the N4ASTAT is equal to HIGH-RED
THEN  diagnosis verified
    VERIFIED BY:  high generator voltage
    CAUSE:  turbine speed control malfunction
    ACTION: 1. place normal power gen system ooc
            2. shift to backup power gen system
            3. shift to emergency-full context
            4. terminate mission

IF  the V4ASTAT is equal to LOW-RED
AND the N4ASTAT is equal to LOW-RED
THEN  diagnosis verified
    VERIFIED BY:  low generator voltage
    CAUSE:  turbine speed control malfunction
    ACTION: 1. place normal power gen system ooc
            2. shift to backup power gen system
            3. shift to emergency-full context
            4. terminate mission

-----------------------------------------------------------------
Rules in function TAKE-ACTION-LOW-WF-FLOW  (major rule)

PRELIMINARY DIAGNOSIS:  low flow of working fluid

IF  the P4CSTAT is equal to GREEN
AND the CV4CPOS is equal to OPEN
THEN  diagnosis verified
    CAUSE:  accumulator bypass valve CV4c open
    ACTION: shut bypass valve CV4c

IF  the CV4BPOS is equal to SHUT
AND the CV4APOS is equal to OPEN
THEN diagnosis verified
    CAUSE:  improper position of accumulator valves -- low fluid level
    ACTION: 1. open accumulator discharge valve CV4b
            2. shut accumulator charge valve CV4a

IF  the P4BSTAT is equal to LOW-RED
AND the CV4DPOS is equal to SHUT
THEN  diagnosis verified
    CAUSE:  regenerator inlet valve CV4D shut
    ACTION:  open valve CV4D

IF  the V4ASTAT is equal to LOW-RED
AND the N4ASTAT is equal to LOW-RED
THEN  diagnosis verified
    CAUSE:  loss of working fluid
    VERIFIED BY:  low turbine speed/voltage
    ACTION: 1. place normal power gen system ooc
            2. shift to backup power gen system
            3. shift to emergency-full context
            4. terminate mission

IF  the P4CSTAT is equal to LOW-RED
THEN  diagnosis verified
     CAUSE:  low compressor output
     VERIFIED BY:  low pressure - compressor outlet
     ACTION: go to major rule:  TAKE-ACTION-LOW-COP
```


Reproduced with permission of the copyright owner. Further reproduction prohibited without permission.

```
IF  no other data
THEN
    CAUSE:  flowmeter FM4 malfunction
    ACTION: place flowmeter FM4 on ooc-list

-----------------------------------------------------------------
Rules in function TAKE-ACTION-HIGH-WF-FLOW  (major rule)

PRELIMINARY DIAGNOSIS:  high flow of working fluid

IF  the CV4CPOS is equal to SHUT
AND  the CV4BPOS is equal to OPEN
THEN  diagnosis verified
    CAUSE:  excessive working fluid in system
    VERIFIED BY:  accumulator valve positions improper
    ACTION: 1. shut accumulator discharge valve CV4B
            2. open accumulator charging valve CV4A

IF no other data
THEN
     CAUSE:  malfunction in sensor FM4
     ACTION: place sensor FM4 on ooc-list

-----------------------------------------------------------------
Rules in function TAKE-ACTION-HIGH-TIT  (major rule)

IF  the T1CSTAT is equal to HIGH-RED
  OR  the T1BSTAT is equal to HIGH-RED
  OR the T1ASTAT is equal to HIGH-RED
THEN   go to major rule:
   TAKE-ACTION-REACTOR-HOT

IF  the T4ASTAT is equal to HIGH-RED
THEN  go to major rule:
   TAKE-ACTION-HIGH-CIT

IF  the FM4STAT is equal to LOW-RED
THEN  go to major rule:
   TAKE-ACTION-LOW-WF-FLOW

IF  no other data
THEN
     CAUSE:  sensor T4B malfunction
     ACTION: place sensor T4B on ooc-list

-----------------------------------------------------------------
Rules in function TAKE-ACTION-LOW-TIT (major rule)

PRELIMINARY DIAGNOSIS:  low temp of working fluid in turbine inlet

IF  the T1CSTAT is equal to LOW-RED
OR the T1BSTAT is equal to LOW-RED
OR the T1ASTAT is equal to LOW-RED
THEN  go to major rule:
   TAKE-ACTION-REACTOR-COLD

IF  the T4DSTAT is equal to LOW-RED
THEN  go to the major rule:
   TAKE-ACTION-LOW-CIT
```


Reproduced with permission of the copyright owner. Further reproduction prohibited without permission.

```
IF  no other data
THEN
    CAUSE:  sensor T4B malfunction
    ACTION: place sensor T4B on ooc-list

-----------------------------------------------------------------
Rules in function TAKE-ACTION-HIGH-CIT  (major rule)

PRELIMINARY DIAGNOSIS:  high cooler inlet temp

IF  the  T4BSTAT is equal to HIGH-RED
THEN
    ACTION:  reduce power and evaluate temp
    IF  T4BSTAT  decreasing to HIGH-Y or GREEN
    THEN
        ACTION:  stay at reduced power level
    IF  T4BSTAT  remains equal to HIGH-RED
    THEN
        ACTION: 1. place normal power gen system ooc
                2. shift to backup power gen system
                3. shift propulsion to emergency-full context
                4. terminate mission

IF no other data
THEN
    CAUSE:  sensor T4D malfunction
    ACTION:  place sensor T4D on ooc-list

-----------------------------------------------------------------
Rules in function TAKE-ACTION-LOW-CIT  (major rule)

PRELIMINARY DIAGNOSIS:  low cooler inlet temp

IF  the T4CSTAT is equal to LOW-Y
  OR the T4CSTAT is equal to LOW-RED
AND the T4BSTAT is equal to LOW-Y
  OR the T4BSTAT is equal to LOW-RED
THEN  diagnosis verified
    CAUSE:  malfunction in cooling system
    ACTION: increase monitor rate

IF  the T4CSTAT is equal to GREEN
AND the T4BSTAT is equal to GREEN
THEN
    CAUSE:  malfunction of sensor T4D
    ACTION:  place sensor T4D on ooc-list

-----------------------------------------------------------------
Rules in function TAKE-ACTION-LOW-COP  (major rule)

PRELIMINARY DIAGNOSIS:  low compressor outlet pressure

IF  the VB4BSTAT is equal to HIGH-RED
THEN  diagnosis verified
    CAUSE:  compressor malfunction
    VERIFIED BY:  high compressor vibration level
    ACTION: 1. place normal power gen system on ooc-list
            2. shift to backup power gen system
            3. shift propulsion to emergency-full context
            4. terminate mission
```


Reproduced with permission of the copyright owner. Further reproduction prohibited without permission.

```
IF  the FM4STAT is equal to LOW-RED
THEN  diagnosis verified
    CAUSE:  loss of working fluid
    VERIFIED BY:  low flow of working fluid
    ACTION: 1. place normal power gen system on ooc-list
            2. shift to backup power gen system
            3. shift propulsion to emergency-full context
            4. terminate mission

IF  no other data
THEN
     CAUSE:  sensor P4C malfunction
     ACTION:  place sensor P4C on ooc-list
```

Rules in function TAKE-ACTION-GEN-VOLTAGE (major rule)

```
PRELIMINARY DIAGNOSIS:  generator voltage out of tolerance

IF  the STATUS is equal to LOW-RED
AND
   IF the N4ASTAT is equal to LOW-RED
   THEN  go to major rule:
      TAKE-ACTION-TURBINE-RPM

   IF VB4ASTAT is equal to HIGH-RED
   OR VB4BSTAT is equal to HIGH-RED
   THEN  go to major rule:
      TAKE-ACTION-VIB

   IF V6ASTAT is equal to LOW-RED
   OR V8ASTAT  is equal to LOW-RED
   OR V8BSTAT  is equal to LOW-RED
   THEN diagnosis verified
       CAUSE:  generator voltage regulator malfunction
       ACTION: 1. place normal power gen system on ooc-list
               2. shift to backup power gen system
               3. shift propulsion to emergency-full context
               4. terminate mission

   IF no other data
   THEN
       CAUSE:  sensor V4A malfunction
       ACTION:  place sensor V4A on ooc-list

IF  the STATUS is equal to HIGH-RED
AND
   IF N4ASTAT is equal to HIGH-RED
   THEN go to major rule:
      TAKE-ACTION-TURBINE-RPM

   IF VB4BSTAT is equal to HIGH-RED
   OR VB4ASTAT is equal to HIGH-RED
   THEN  go to major rule:
      TAKE-ACTION-VIB

   IF V6ASTAT is equal to LOW-RED
   OR V8ASTAT is equal to LOW-RED
   OR V8BSTAT is equal to LOW-RED
   THEN
       CAUSE: generator voltage regulator malfunction
```


Reproduced with permission of the copyright owner. Further reproduction prohibited without permission.

```
      ACTION: 1. place normal power gen system on ooc-list
              2. shift to backup power gen system
              3. shift propulsion to emergency-full context
              4. terminate mission

   IF no other data
   THEN
        CAUSE:  malfunction in sensor V4A
        ACTION:  place sensor V4A on ooc-list
```

Rules in function TAKE-ACTION-GEN-CURRENT (major rule)

PRELIMINARY DIAGNOSIS: gnerator current out of tolerance

```
IF  the STATUS is equal to LOW-RED
AND
   IF V4ASTAT is equal to LOW-RED
   THEN  go to major rule:
      TAKE-ACTION-GEN-VOLTAGE

   IF S4APOS is equal to OPEN
   THEN
       CAUSE:  generator output breaker is open
       ACTION: shut breaker S4A

IF  the STATUS is equal to HIGH-RED
AND
   IF V4ASTAT is equal to HIGH-RED
   THEN  to to major rule:
      TAKE-ACTION-GEN-VOLTAGE

   IF S4BPOS is equal to SHUT
   AND S5DPOS is equal to SHUT
   AND S5EPOS is equal to SHUT
   THEN  diagnosis verified
       CAUSE:  battery charger energized
       ACTION:  de-energize battery charger

   IF A6ASTAT is equal to HIGH-RED
   OR A8ASTAT is equal to HIGH-RED
   OR A8BSTAT is equal to HIGH-RED
   OR A7ASTAT is equal to HIGH-RED
   OR A7BSTAT is equal to HIGH-RED
   THEN  go to major rule:
      TAKE-ACTION-HIGH-THRUSTER-CURRENT

IF no other data
THEN
     CAUSE:  sensor A4A  malfunction
     ACTION:  place sensor A4A on ooc-list
```

Rules in function TAKE-ACTION-BATTERY-HIGH-TEMP (major rule)

PRELIMINARY DIAGNOSIS: high battery temp

```
IF  the S5APOS is equal to SHUT
AND the A4BSTAT is equal to HIGH-RED
AND the S5CPOS is equal to SHUT
THEN  go to major rule:
```


Reproduced with permission of the copyright owner. Further reproduction prohibited without permission.

```
   TAKE-ACTION-THRUSTER-CURRENT

IF  the S5APOS is equal to SHUT
AND  the S5CPOS is equal to SHUT
AND the A4DSTAT is equal to HIGH-RED
THEN  diagnosis verified
    CAUSE:  excessive current -- auxiliary loads
    ACTION:  ACTION BEYOND SCOPE OF PPM SYSTEM

IF  the A5ASTAT is equal to HIGH-RED
THEN  diagnosis verified
     CAUSE:  internal battery problem
     VERIFIED BY:  high battery current
     ACTION: place battery on ooc-list

IF  the S5APOS is equal to SHUT
AND the A5ASTAT is equal to GREEN
OR the S5CPOS is equal to SHUT
  AND the S5APOS is equal to SHUT
  AND the A5ASTAT is equal to GREEN
  AND the A4BSTAT is equal to GREEN
  AND the A4DSTAT is equal to GREEN
THEN
    CAUSE:  unable to verify -- all currents normal
    ACTION:  increase monitor rate

-----------------------------------------------------------------------
Rules in function TAKE-ACTION-STARTER-ENERGIZED  (major rule)

PRELIMINARY DIAGNOSIS:  starter energized

   CAUSE:  switch S5B shut
   ACTION: open switch S5B

-----------------------------------------------------------------------
Rules in function TAKE-ACTION-CHARGER-ENERGIZED  (major rule)

PRELIMINARY DIAGNOSIS:  charger energized

   VERIFIED BY:  switches S4B S5D S5E SHUT
   ACTION:  open switches S4B S5D S5E

-----------------------------------------------------------------------
Rules in function TAKE-ACTION-BATTERY-LOW-VOLTAGE  (major rule)

PRELIMINARY DIAGNOSIS:  battery voltage low

IF  the A4BSTAT is equal to HIGH-RED
AND the A5ASTAT is equal to HIGH-RED
THEN  diagnosis verified
    CAUSE:  excessive current to thruster system
    VERIFIED BY:  high currents  on sensor A4B A5A
    ACTION: go to major rule: TAKE-ACTION-HIGH-THRUSTER-CURRENT

IF  the A4DSTAT is equal to HIGH-RED
AND the A5ASTAT is equal to HIGH-RED
THEN  diagnosis verified
    CAUSE:  high current to auxiliary loads
    ACTION:  action beyond scope of PPM system

IF  the B5ASTAT is equal to HIGH-RED
```


Reproduced with permission of the copyright owner. Further reproduction prohibited without permission.

```
THEN  diagnosis verified
    CAUSE:  high battery discharge status
    ACTION: go to major rule:  TAKE-ACTION-BATTERY-HIGH-KW

IF  the T5ASTAT is equal to HIGH-RED
THEN  diagnsis verified
    VERIFIED BY:  high battery temperature
    ACTION:  go to major rule:  TAKE-ACTION-BATTERY-HIGH-TEMP

IF  the A5ASTAT is equal to HIGH-RED
THEN  diagnosis verified
     VERIFIED BY:  high battery current
     ACTION: 1. place battery on open circuit and monitor
             2. place battery on ooc-list

IF  no other data
THEN
     CAUSE:  sensor V5A malfunction
     ACTION:  place sensor V5A on ooc-list

-----------------------------------------------------------------------
Rules in function TAKE-ACTION-BATTERY-HIGH-VOLTAGE  (major rule)

PRELIMINARY DIAGNOSIS:  high battery voltage

IF  the S5APOS is equal to SHUT
AND the S5EPOS is equal to SHUT
AND the S5DPOS is equal to SHUT
AND the S4BPOS is equal to SHUT
THEN  diagnosis verified
    CAUSE:  battery being charged by generator
    ACTION: stop battery charge by opening switches

IF  the V4DSTAT is equal to GREEN
AND  the V4BSTAT is equal to GREEN
AND  the V4ASTAT is equal to GREEN
THEN
    CAUSE:  malfunction in sensor V5A
    VERIFIED BY:  normal voltages on other sensors
    ACTION: place sensor V5A on ooc-list

-----------------------------------------------------------------------
Rules in function TAKE-ACTION-BATTERY-HIGH-CURRENT (major rule)

PRELIMINARY DIAGNOSIS:  excessive battery current

IF  the A4BSTAT is equal to HIGH-RED
THEN  diagnosis verified
  VERIFIED BY:  high current to thrusters
  ACTION:  go to major rule:  TAKE-ACTION-HIGH-THRUSTER-CURRENT

IF  the A4DSTAT is equal to HIGH-RED
THEN  diagnosis verified
     VERIFIED BY:  high auxiliary current loads
     ACTION:  BEYOND SCOPE OF PPM SYSTEM

IF  the T5ASTAT is equal to HIGH-RED
THEN  diagnosis verified
    VERIFIED BY:  high battery temp
    CAUSE:  internal battery problem
    ACTION: 1. place battery on open circuit
```


Reproduced with permission of the copyright owner. Further reproduction prohibited without permission.

```
            2. place battery on ooc-list

IF  no other data
THEN
     CAUSE:  malfunction in sensor A5A
     ACTION:  place sensor A5A on ooc-list

-----------------------------------------------------------------------
Rules in Function TAKE-ACTION-BATTERY-HIGH-KW  (major rule)

PRELIMINARY DIAGNOSIS:  overdischarge of battery

IF V5ASTAT is equal to LOW-RED
THEN diagnosis verified
    CAUSE:  overdischarge of battery
    ACTION:  recharge battery

-----------------------------------------------------------------------
```


Reproduced with permission of the copyright owner. Further reproduction prohibited without permission.

E.3.3. Rules for File "kb-ts"

```
-----------------------------------------------------------------------
Rules in function GET-MTH-RULES  (primary rule set)

IF  the STATUS is equal to RED
AND the SENSOR is equal to S6A
THEN  go to major rule:
   TAKE-ACTION-THRUSTER-SWITCH

IF  the STATUS is equal to LOW-RED
AND the SENSOR is equal to V6A
THEN  go to major rule:
   TAKE-ACTION-LOW-THRUSTER-VOLTAGE

IF  the STATUS is equal to HIGH-RED
AND the SENSOR is equal to A6A
THEN  go to major rule:
   TAKE-ACTION-HIGH-THRUSTER-CURRENT

IF  the STATUS is equal to HIGH-RED
AND the SENSOR is equal to N6A
THEN  go to major rule:
   TAKE-ACTION-HIGH-THRUSTER-RPM

IF  the STATUS is equal to HIGH-RED
AND  the SENSOR is equal to T6A
THEN  go to major rule:
   TAKE-ACTION-HIGH-THRUSTER-TEMP

IF no other data
THEN  conclude rule not identified -- need more data

-----------------------------------------------------------------------
Rules in function GET-HTH-RULES  (primary rule set)

IF  the STATUS is equal to LOW-RED
AND the SENSOR is equal to V7B
  OR the SENSOR is equal to V7A
THEN  go to major rule:
   TAKE-ACTION-LOW-THRUSTER-VOLTAGE

IF  the STATUS is equal to HIGH-RED
AND the SENSOR is equal to A7B
  OR the SENSOR is equal to A7A
THEN  go to major rule:
   TAKE-ACTION-HIGH-THRUSTER-CURRENT

IF  the STATUS is equal to HIGH-RED
AND the SENSOR is equal to N7B
  OR  the SENSOR is equal to N7A
THEN  go to major rule:
   TAKE-ACTION-HIGH-THRUSTER-RPM

IF  the STATUS is equal to HIGH-RED
AND  the SENSOR is equal to T7B
  OR  the SENSOR is equal to T7A
THEN   go to major rule:
   TAKE-ACTION-HIGH-THRUSTER-TEMP
```


Reproduced with permission of the copyright owner. Further reproduction prohibited without permission.

```
IF  the STATUS is equal to RED
AND  the SENSOR is equal to S7B
  OR  the SENSOR is equal to S7A
THEN  go to major rule:
   TAKE-ACTION-THRUSTER-SWITCH

IF  no other data
THEN  conclude:   rule not identified -- need more data

-----------------------------------------------------------------
Rules in function GET-ATH-RULES  (primary rule set)

IF  the STATUS is equal to RED
AND the SENSOR is equal to S8B
  OR the SENSOR is equal to S8A
THEN  go to major rule:
   TAKE-ACTION-THRUSTER-SWITCH

IF  the STATUS is equal to HIGH-RED
AND the SENSOR is equal to A8B
  OR  the SENSOR is equal to A8A
THEN   go to major rule:
   TAKE-ACTION-HIGH-THRUSTER-CURRENT

IF  the STATUS is equal to LOW-RED
AND  the SENSOR is equal to V8B
  OR  the SENSOR is equal to V8A
THEN  go to major rule:
   TAKE-ACTION-LOW-THRUSTER-VOLTAGE

IF  the STATUS is equal to HIGH-RED
AND  the SENSOR is equal to N8B
  OR  the SENSOR is equal to N8A
THEN  go to major rule:
   TAKE-ACTION-HIGH-THRUSTER-RPM

IF  the STATUS is equal to HIGH-RED
AND  the SENSOR is equal to T8B
  OR  the SENSOR is equal to T8A
THEN  go to major rule:
   TAKE-ACTION-HIGH-THRUSTER-TEMP

IF  no other data
THEN  conclude:  major rule not identified -- need more data

-----------------------------------------------------------------
Rules in function TAKE-ACTION-HIGH-THRUSTER-RPM  (major rule)

PRELIMINARY DIAGNOSIS:  overspeed condition in thruster

IF the N6ASTAT is equal to HIGH-RED
AND the A6ASTAT is equal to HIGH-RED
THEN  diagnosis verified
    CAUSE:  malfunction in main thruster controller
    VERIFIED BY:  high thruster motor current
    ACTION:  place main thruster system on ooc-list

IF  the N8ASTAT is equal to HIGH-RED
AND the A8ASTAT is equal to HIGH-RED
THEN  diagnosis  verified
```


Reproduced with permission of the copyright owner. Further reproduction prohibited without permission.

```
    CAUSE: malfunction in aux #1 thruster controller
    VERIFIED BY:  high thruster motor current
    ACTION:  place aux#1 thruster system on ooc-list

IF  the N8BSTAT is equal to HIGH-RED
AND the A8BSTAT is equal to HIGH-RED
THEN  diagnosis verified
    CAUSE: malfunction in aux #2 thruster controller
    VERIFIED BY:  high thruster motor current
    ACTION:  place aux #2 thruster system on ooc-list

IF  the N7ASTAT is equal to HIGH-RED
AND the A7ASTAT is equal to HIGH-RED
THEN  diagnosis verified
    CAUSE: malfunction in hov #1 thruster controller
    VERIFIED BY:  high thruster motor current
    ACTION: place hov#1 thruster system on ooc-list

IF  the N7BSTAT is equal to HIGH-RED
AND the A7BSTAT is equal to HIGH-RED
THEN  diagnosis verified
    CAUSE: malfunction in hov #2 thruster controller
    VERIFIED BY:  high thruster motor current
    ACTION:  place hov #2 thruster system on ooc-list

IF no  other data
THEN   conclude: unable to verify at this time
       increase monitor rate

-----------------------------------------------------------------
Rules in function TAKE-ACTION-HIGH-THRUSTER-CURRENT  (major rule)

PRELIMINARY DIAGNOSIS:  excessive current in thruster motor

IF  the N8BSTAT is equal to HIGH-RED
  OR the N8ASTAT is equal to HIGH-RED
  OR the N7BSTAT is equal to HIGH-RED
  OR the N7ASTAT is equal to HIGH-RED
  OR the N6ASTAT is equal to HIGH-RED
THEN  go to major rule:
TAKE-ACTION-HIGH-THRUSTER-RPM

IF  the T8BSTAT is equal to HIGH-RED
  OR the T8ASTAT is equal to HIGH-RED
  OR the T7BSTAT is equal to HIGH-RED
  OR  the T7ASTAT is equal to HIGH-RED
  OR the T6ASTAT is equal to HIGH-RED
THEN  go to major rule:
   TAKE-ACTION-HIGH-THRUSTER-TEMP

IF no other data
THEN
     conclude: unable to verify at this time
     increase monitor rate

-----------------------------------------------------------------
Rules in function TAKE-ACTION-LOW-THRUSTER-VOLTAGE  (major rule)

PRELIMINARY DIAGNOSIS:  low voltage to thruster motor

IF  the V5ASTAT is equal to LOW-RED
```


Reproduced with permission of the copyright owner. Further reproduction prohibited without permission.

```
THEN  go to major rule:
   TAKE-ACTION-BATTERY-LOW-VOLTAGE

IF  the V4ASTAT is equal to LOW-RED
THEN  go to major rule:
   TAKE-ACTION-GEN-VOLTAGE

IF  the A8BSTAT is equal to HIGH-RED
  OR the A7BSTAT is equal to HIGH-RED
  OR the A8ASTAT is equal to HIGH-RED
  OR the A7ASTAT is equal to HIGH-RED
  ORthe A6ASTAT is equal to HIGH-RED
THEN  go to major rule:
   TAKE-ACTION-HIGH-THRUSTER-CURRENT

IF  the S4APOS is equal to OPEN
AND the MODE is equal to NORMAL
THEN  diagnosis verified
    CAUSE: power disruption from npg-sys: switch S4A open
    ACTION: shut switch S4A

IF  the S5CPOS is equal to SHUT
AND the MODE is equal to NORMAL
THEN  diagnosis verified
    CAUSE: improper switch lineup -- switch S5C shut
    ACTION:  open switch S5C

IF  no other data
THEN  conclude: unable to verify
      increase monitor rate

-------------------------------------------------------------------
Rules in function TAKE-ACTION-HIGH-THRUSTER-TEMP  (major rule)

PRELIMINARY DIAGNOSIS:  excessive temperature in thruster motor

IF  the N6ASTAT is equal to HIGH-RED
  OR the N6ASTAT is equal to LOW-RED
    OR the A6ASTAT is equal to HIGH-RED
AND the T6ASTAT is equal to HIGH-RED
THEN  diagnosis verified
    CAUSE: overload of main thruster motor
    VERIFIED BY:  main thruster current or rpm
    ACTION: 1. place main thruster system on ooc-list
            2. shift to aux propulsion system

IF  the N7ASTAT is equal to HIGH-RED
  OR the N7ASTAT is equal to LOW-RED
    OR the A7ASTAT is equal to HIGH-RED
AND the T7ASTAT is equal to HIGH-RED
THEN  diagnosis verified
    CAUSE:  overload of #1 hovering motor
    VERIFIED BY:  #1 hovering thruster current or rpm
    ACTION: 1. place #1 hovering system on ooc-list

IF  the N7BSTAT is equal to HIGH-RED
  OR the N7BSTAT is equal to LOW-RED
    OR the A7BSTAT is equal to HIGH-RED
AND the T7BSTAT is equal to HIGH-RED
THEN  diagnosis verified
    CAUSE: overload of #2 hovering motor
```


Reproduced with permission of the copyright owner. Further reproduction prohibited without permission.

```
    VERIFIED BY: #2 hovering thruster current or rpm
    ACTION:  place #2 hovering motor on ooc-list

IF  the N8ASTAT is equal to HIGH-RED
  OR the N8ASTAT is equal to LOW-RED
    OR the A8ASTAT is equal to HIGH-RED
AND the T8ASTAT is equal to HIGH-RED
THEN  diagnosis verified
    CAUSE: overload of #1 auxiliary motor
    VERIFIED BY:  #1 aux thruster motor current or rpm
    ACTION:  place #1 aux thruster system on ooc-list

IF  the N8BSTAT is equal to HIGH-RED
  OR the N8BSTAT is equal to LOW-RED
    OR the A8BSTAT is equal to HIGH-RED
AND the T8BSTAT is equal to HIGH-RED
THEN  diagnosis verified
    CAUSE: overload of #2 auxiliary motor
    VERIFIED BY:  #2 aux thruster motor current or rpm
    ACTION: place #2 aux thruster system on ooc-list

-----------------------------------------------------------------------
Rules in function TAKE-ACTION-THRUSTER-SWITCH  (major rule)

PRELIMINARY DIAGNOSIS:  improper switch position in thruster system

IF  the S6APOS is equal to RED
IF  the MTHSTAT is equal to OOC
  OR the S6ASTAT is equal to OOC
AND the SENSOR is equal to S6A
THEN  diagnosis verified
    CAUSE: main thruster system is ooc
    ACTION: shift to aux thruster system

IF  the HTH1STAT is equal to OOC
  OR the S7ASTAT is equal to OOC
AND the SENSOR is equal to S7A
THEN  diagnosis verified
    CAUSE: #1 hovering thruster system is ooc

IF  the HTH2STAT is equal to OOC
  OR the S7BSTAT is equal to OOC
AND the SENSOR is equal to S7B
THEN  diagnosis verified
    CAUSE: #2 hovering thruster system is ooc

IF  the ATH1STAT is equal to OOC
  OR the S8ASTAT is equal to OOC
AND the SENSOR is equal to S8A
THEN  diagnosis verified
   CAUSE: #1 auxiliary thruster system is ooc

IF  the ATH2STAT is equal to OOC
  OR the S8BSTAT is equal to OOC
AND the SENSOR is equal to S8B
THEN  diagnosis verified
    CAUSE: #2 auxiliary thruster system is ooc

IF  the A6ASTAT is equal to LOW-RED
AND the SENSOR is equal to S6A
THEN diagnosis verified
```


Reproduced with permission of the copyright owner. Further reproduction prohibited without permission.

```
    CAUSE: switch S6A improperly open
    ACTION: shut switch S6A

IF  the SENSOR is equal to S7A
AND the A7ASTAT is LOW-RED
THEN  diagnosis verified
    CAUSE:  switch S7A improperly open
    ACTION: shut switch S7A

IF  the A7BSTAT is equal to LOW-RED
AND the SENSOR is equal to S7B
THEN  diagnosis verified
    CAUSE:  switch S7B improperly open
    ACTION: shut switch S7B

IF  the A8ASTAT is equal to LOW-RED
AND the SENSOR is equal to S8A
THEN  diagnosis verified
    CAUSE:  switch S8A improperly open
    ACTION:  shut switch S8A

IF  the A8BSTAT is equal to LOW-RED
AND the SENSOR is equal to S8B
THEN  diagnosis verified
    CAUSE:  switch S8B improperly open
    ACTION:  shut switch S8B

IF  no other data
THEN  conclude:  unable to verify
      increase monitor rate
-----------------------------------------------------------------------
```


Reproduced with permission of the copyright owner. Further reproduction prohibited without permission.