AN INSTRUMENT FOR DETECTING SFERICS FROM VISIBLE LIGHTNING DISCHARGES

By

JOHN CARL HAMILTON

Bachelor of Science

Oklahoma State University

Stillwater, Oklahoma

1957

Submitted to the faculty of the Graduate School of
the Oklahoma State University
in partial fulfillment of the requirements
for the degree of
MASTER OF SCIENCE
August, 1962

AN INSTRUMENT FOR DETECTING SFERICS
FROM VISIBLE LIGHTNING DISCHARGES

Thesis Approved:

Herbert L. Jones
Thesis Adviser

Wm. L. Hughes

Robert MacVicar
Dean of Graduate School

PREFACE

In recent years extensive research has been conducted in the area of electrical phenomena associated with severe weather. Many atomspherics research studies have shown that the electrical characteristics of a given thunderstorm may give an advance warning as to its severity. Among the most noteworthy of these studies are those which have been conducted at Oklahoma State University under the direction of Dr. Herbert L Jones.

As a member of the Atmospherics Staff at Oklahoma State University, the writer was responsible for the development of an instrument which should serve as a useful tool in the more advancedstudies of atmospheric electricity. To the knowledge of the Atmospherics Staff this instrument is the first of its kind ever constructed. This thesis outlines the development of this device from the moment of its conception to the time it was placed in operation.

In Chapter I a description is given of the state of the data taking procedure previous to 1961. Also a new concept in obtaining data is discussed. In Chapter II a brief discussion is given of the operation of the instrument's entire system. Chapters III, IV, V, and VI deal with the various units of which the system is comprised. In Chapter VII a description is given of the performance of the system and it also contains samples of the data obtained with the aid of the device.

The writer wishes to express his indebtedness to those persons with whom he has been associated during the time he has worked with the Atmospherics Staff. In particular he wishes to thank Ray Calkins and

Robert Caswell for their helpful suggestions and Harvard Tomlinson who did an excellent job in constructing the entire system. Also he wishes to thank Mrs. Dorothy McCullough who patiently helped prepare this thesis for printing. A special thanks is extended to Dr. Jones who has been responsible for atmospherics research at Oklahoma State University for over 15 years and whose confidence and encouragement have helped to make the project, upon which this thesis is based, a success.

In addition to those mentioned previously, I am grateful to my wife, Eunice, whose help in preparing this thesis has been invaluable.

TABLE OF CONTENTS

LIST OF FIGURES

CHAPTER I

INTRODUCTION

The atmospherics research program at Oklahoma State University has several objectives included in its overall investigation. One of the primary objectives of the program is to discover whether or not the various types of lightning discharges which occur during thunderstorm activity can be identified by their electrical characteristics. Such an identification method, if effectively developed, would be quite valuable in the study of atmospheric electrical phenomena. At present a visual observation is the only means available to the atmospheric researcher for determining a particular type of discharge. This means that although equipment exists for detecting sferics from discharges hundreds of miles away, the investigator has no method for determining from which type discharge each sferic was radiated.

The atmospherics staff at Oklahoma State University has placed the various kinds of lightning discharges into four general types or groups. These four general types are (1) cloud-to-ground discharge, (2) cloud discharge, (3) flare discharge, and (4) tornado oscillator or tornado pulse generator. Some of these general types can be broken down into subclassifications as, for instance, the cloud discharge may be either an inter-cloud discharge or an intra-cloud discharge. This grouping of discharges into four general types is based on the visual observations of the atmospherics staff and in particular on the observations of the project director, Dr. H. L Jones[1] who has been quite actively engaged in atmospherics studies for over 15 years. It is to be noted that the aforementioned grouping has not been universally accepted by atmospherics researchers throughout the world but this does not destroy its usefulness insofar as the atmospherics staff is concerned. The cloud-to-ground discharge is by far the most frequently observed type of discharge and the cloud discharge is next most frequently observed. These two types of lightning discharges accompany the ordinary thunderstorm which occurs frequently in the great plains region of the United States during the period of March 15 to August 15, annually. The flare discharge and the tornado oscillator are observed much less frequently than the other two types. In fact, it can be said that they are rare compared to the cloud-to-ground and cloud types. In most cases when the flare discharge or the tornado oscillator was observed it was discovered that a short time later violent storm activity resulted from the cloud in which it was observed.

Almost immediately after discharge identification became one of the major objectives of the project it was realized by the staff that data must be obtained and studied on lightning discharges which are close enough to the atmospherics laboratory to be observed visually. As mentioned previously, visual observation is the only method in existence for accurately determining the type of discharge. Although vast quantities of data on lightning discharges are available at the laboratory, none of these data were taken with this objective in mind and

---

[1] H. L Jones, Report in Proceedings of the Second Conference on Atmospheric Electricity, New Hampshire, 1958, Recent Advancements in Atmospheric Electricity (New York, 1958), pp. 543-556.

thus it is virtually impossible to take advantage of this information.

After considering the factors involved in making a study of this type it was obvious that only data on visual strokes near the laboratory could be used to advantage. Also in preliminary studies only small amounts of data could be handled by the staff. It was intended that if the preliminary investigation gave any encouragement at all, then larger quantities of data would be obtained and the digital computer facility on the campus would be utilized to process this data for ease of analysis. The first step taken in the discharge identification study was to arrange for a means of marking the 35 millimeter data film so that during analysis it would be possible to distinguish between discharges that were observed to be the cloud-to-ground types and those that were observed to be the cloud type.

A system was devised whereby an observer was stationed outside the laboratory at the time that a thunderstorm was approaching the area. The observer controlled a switch which operated a small light used to mark the data film. When the observer noted a cloud-to-ground discharge he would operate the switch twice and for a cloud stroke the switch was closed once. As each stroke was marked the observer would relate his observations to another member of the atmospherics staff who would be stationed inside the laboratory with a log book. The log keeper would record all the observations of the individual who was marking events plus any observations of his own if the situation were such that he could see any of the activity himself. Also the log keeper would indicate in the log the time of each event as best he could. The purpose for noting time was to aid in locating the marked events on the film during analysis. Practically all data were taken on 35 millimeter film which was loaded into the camera on 400 foot rolls. The film speed for local storm data was 600 inches per minute and, therefore, only 8 minutes of film was available on a 400 foot roll. Although data were taken in periods of 1 to 2 minutes spaced 5 to 10 minutes apart, frequently there would be 50 to 100 feet of film between marked events. Because of this, any information as to the time of a marked event in the written log would greatly aid in data analysis.

The manual marking and logging system was used for quite some time and with it a rather large quantity of data were taken. Although some degree of success was experienced with the system, it was found that it also presented certain difficulties. One major difficulty with the manual method may be described as an organizational problem. In spite of planning and preparations between times of storm activity there was always the matter of checking the marking lights, the control relay and running the cable outside. Although this seldom took a great amount of time, in the event of a rapidly moving storm or one which came into the area at an unsuspected time, it could take valuable calibration time from the recording instruments. A further disadvantage to the manual marking system was that one member of the staff was required to stand outside the laboratory during the time that a storm was passing nearby. It was found that on some occasions when an individual was standing outside in wind and rain that he inadvertently erred in coding the film. For instance, it was found that when a cloud stroke was observed for which one mark was to be placed on the film, the observer would sometimes operate the switch twice rather than only once and thus the discharge would be marked erroneously on the film.

The general inconvenience of the manual marking system was one of two major factors which led the atmospheric staff to consider ways to perform the task automatically. The other factor was a problem associated with the waveform recording equipment which, it was felt, could be solved along with the event marking problem.

The waveform recording system in use at the atmospherics laboratory is part of a larger system whose original function was to detect sferics, record their direction from the laboratory by means of a 10 kilocycle direction finding channel, obtain energy samples at various other frequencies, and record the waveform of the electromagnetic signals received from the sferics. All the data obtained by this system were recorded on continuously moving 35 millimeter film. The primary element of the waveform section of this equipment is a vertical whip antenna which detects the radiated signal. The antenna signal is brought into the laboratory on a coaxial cable fed by a cathode follower amplifier located at the antenna base. Inside the laboratory the signal is amplified by a wide-band amplifier having a bandwidth of about 250 KC., and a gain of 60 db. Near the output of the wide-band amplifier, the signal is sampled and fed to a trigger circuit which supplies a trigger signal to the horizontal sweep circuit of a cathode-ray oscilloscope which is built into the sferics unit. The output of the wide-band amplifier is fed through a 50 microsecond delay line to the vertical amplifier of the oscilloscope. This technique allows the horizontal sweep to start 50 microseconds previous to the time that signal is applied to the vertical amplifier. The total sweep length of the system may be selected from three possible lengths of 500, 750, or 1000 microseconds. Ordinarily, data are taken using the 500 microsecond length and, therefore, with a 50 microsecond delay line the desired signal is displayed on the latter 90 percent of the sweep trace. The sweep trigger circuit depends upon the waveform signal for its operation and the signal level into the trigger circuit is controlled by a potentiometer designated as the 'trigger level control'. Thus for a given waveform amplifier gain and trigger level there will exist signal amplitudes below which the sweep circuit trigger will fail to operate and, therefore, these small signals will not be presented on the data record. This facility was designed into the Q-3 system to enable the operators to reject signals below some specified level, dictated by operating procedure, which were considered to be of no consequence. The system, therefore, provides for the selection of only a portion of incoming sferics under the ordinary operating conditions for which the equipment was designed and in so doing reduces the analysis burden by rejecting unnecessary waveform signals.

Under the conditions for which the Q-3 system was designed to operate, the waveform recording section performs quite satisfactorily. However, for close close thunderstorm activity of the type which is desirable for study by the atmospherics staff, it has been found that the wave-form recording equipment does not function in a manner which facilitates analysis of its records. At the times when several highly active thunderstorms are within 1 to 10 miles of the atmospheric laboratory, a common occurence in past seasons, it has been found that the Q-3 waveform channel is saturated with signals, most of which are presented on the indicator scope. This happens in spite of the fact that both the amplifier gain and trigger level are adjusted to low sensitivities. Under such circumstances, even when the data film is marked by an observer who operates the marking device quickly and accurately, the task of selecting the waveform corresponding to the event mark is extremely difficult if not impossible. Thus it can be seen that for close storm studies the waveform recording equipment records large quantities of data, most of which is not only unnecessary but also highly undesirable because it hinders data analysis. Of course if it were possible to record in detail, the characteristics of each event occuring in storm activity near the laboratory, it might be possible to obtain from one storm enough data to make a very comprehensive study of discharge types. Since the state of the art of recording atmospheric data has not been advanced to such a high degree as yet, the research worker in the field must work with that relatively small quantity of data which he can record accurately and effectively. In the case of the study being conducted at Oklahoma State University this quantity is that which can be identified visually from the recording station.

In an attempt to overcome the several difficulties and disadvantages inherent in previous data taking procedures, the atmospherics staff decided to initiate a program for designing and constructing additional instrumentation which utilizes more advanced techniques. The device which is to be described in the remainder of this thesis is an outgrowth of this program. The instrument, when used properly, should provide convenience in the data taking process and greatly facilitate data analysis which has always in the past been the heavy burden in atmospheric research.

At this point the writer wishes to state emphatically that the purpose of this introduction has not been to ridicule and belittle previous methods used in the atmospherics studies at Oklahoma State University. On the contrary, this previous work is commendable and those who were responsible for the initiation of such procedures are to be regarded highly for the logical thinking and sound judgment upon which such techniques were established. This work provided the foundation upon which the material to be presented in this thesis is based. It is merely intended that the foregoing discussion bring the reader up to date on the state of the art in this type of investigation in order that the subsequent material may be understood more clearly and the work on which it is based might receive some justification.

CHAPTER II

DESCRIPTION OF SYSTEM OPERATION

In Chapter I considerable emphasis was placed on the fact that in 'lightning-discharge type' studies, the primary element with which one must be concerned is the lightning discharge which can be observed visually. With this fact foremost in mind the atmospherics staff began thinking about ways to improve the data taking and the data analysis procedure. Of course, in the process, the normal questions were considered as to what kinds of data should be obtained for a study of this type as well as the logical but sometimes difficult to answer questions concerning the methods of recording such data.

Since this program was not the first atmospherics study to be conducted at the University, it can be appreciated that a considerable amount of instrumentation was already available. Because of this fact, it was naturally assumed that as much of the available equipment would be used as possible, new equipment being added as necessary. Thus it was decided that equipment which had been serviceable previously would be kept in use with modification and readaptions being made as required.

The decision to use a moving-film camera to record visual details of the lightning discharge was not a difficult one to make. Those who have been engaged in related fields of study will appreciate the fact that when instruments are required to record events such as lightning, explosive tests and many others the selection from which one must choose is not exactly unlimited. The moving-film camera is probably one of the oldest devices to be used in lightning studies. Through the years the movie camera has been adapted in many ways for use in atmospheric studies. Many investigators have ingeniously employed the movie camera to achieve a marked degree of scientific success; many others have used the camera. In an effort to create an instrument which would be quite flexible, the camera presently in use at the atmospherics laboratory evolved into a rather elaborate piece of equipment. Since it is inappropriate to detail the camera in this thesis, suffice it to say that the camera serves as a primary auxiliary part of the system to be described.

In considering the nature of data which would provide the best approach to lightning discharge studies, it was believed that the sferic waveform would be highly beneficial, especially when analyzed in conjunction with the visual details recorded on the moving-film camera. Of course, the camera can record activity from only one sector, about a 30 degree angle, of a storm at any given time and it is this activity whose waveforms were desired for study. The problem then was one in which a means should be provided for recording the sferic waveform for a given lightning discharge photographed. The advantage of such an arrangement should be obvious immediately. As an example of the utility of such a method, if one were to find on the camera film the location of a cloud-to-ground discharge, and at a corresponding time on the waveform record locate a waveform, then it would be possible to say with certainty that the waveform corresponded to the event whose photograph was obtained. It would be reasonable to suggest at this point that time correspondence between the two records would be enough assurance that correlation existed between the events and that any means of recording waveforms would be adequate. Such reasoning is not justified regardless of how obvious it may appear.

The Q-3 system records sferic waveforms from all directions. Since the waveform sweep triggers on signal, as explained previously, a particular waveform will be recorded or rejected depending on its amplitude for any given trigger level setting. Thus the only discriminant available in the system depends upon signal amplitude. For heavy storm activity near the laboratory the trigger level is usually adjusted such that only waveforms for strokes occurring very near the laboratory will be recorded. Even though the trigger level is set high, a great number of waveforms will still appear on the film. This means that although the camera will photograph events from a given 30 degree sector at any given time, waveforms can appear on the film from any direction depending upon the location of storm cells at the time of operation. The result is that for moderate to heavy activity the trigger level may be adjusted as high as possible and the film may be run at the highest practical speed available, and yet so many waveforms will appear on the film at a given time that it will be virtually impossible to decide which one corresponds to the photographed discharge occurring at that time. Occasionally the activity level may be such that it would perhaps be possible to choose the proper waveform, but in general this would not occur.

A block diagram of the system designed to solve the problem outlined above is shown in Figure 2.1.This system provides a means for obtaining waveforms on the Q-3 recording section of only those events photographed by the moving-film camera regardless of the fact that heavy storm activity may be occurring in the vicinity of the laboratory.

The primary element in the waveform discriminator system is the

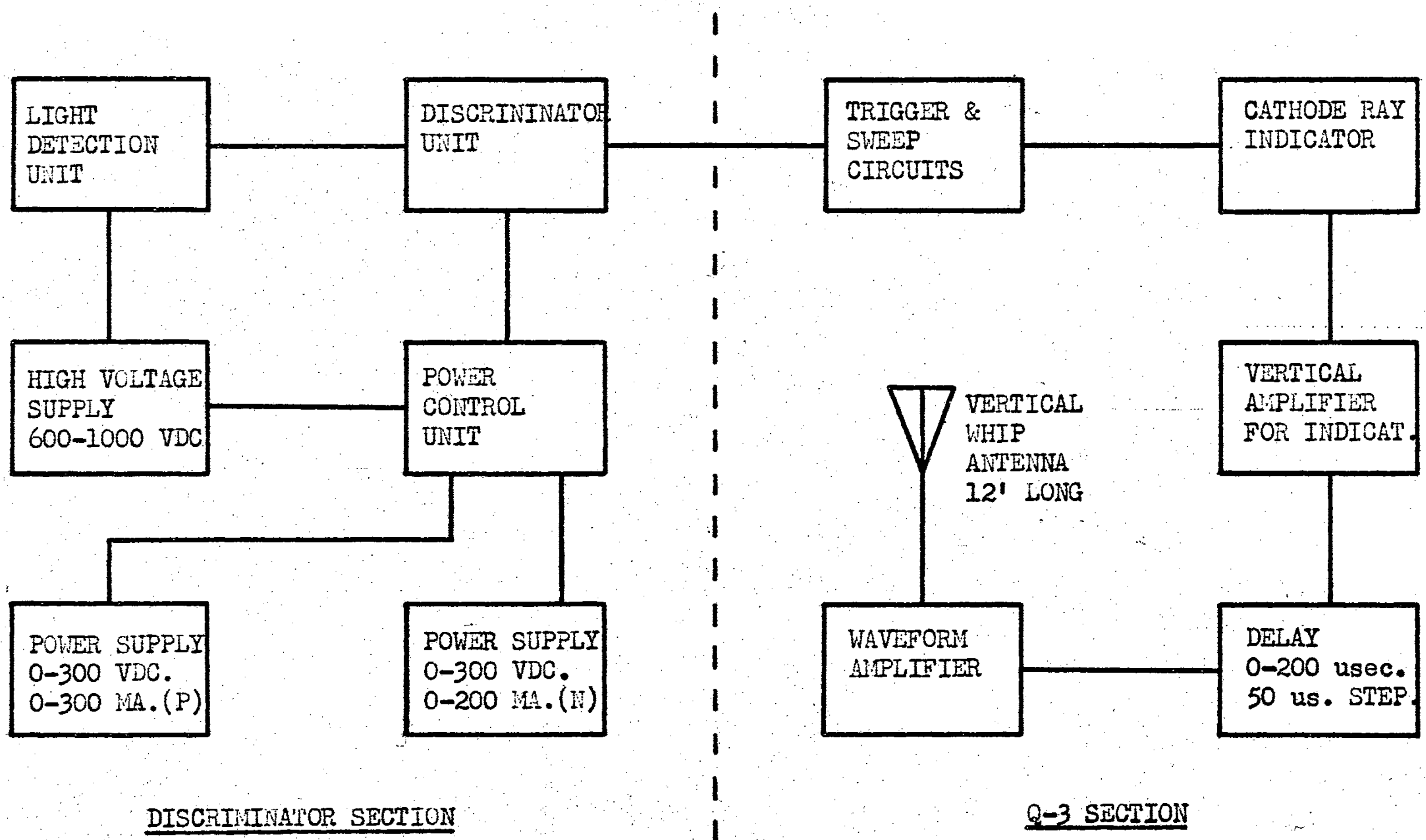

Figure 2.1. Block Diagram of Waveform Discriminator System

Light Detection Unit. This unit is mounted on the camera such that it faces the same direction as the camera lens as the camera is rotated to photograph desired portions of the storm activity. The heart of the Light Detection Unit is an RCA type 6342 photomultiplier tube and its associated circuitry. The unit also contains a multiple element lens having a variable f/2.8 to f/16 adjustment. The lens is placed in front of the 2" diameter photocathode of the photomultiplier tube and a focusing device provides for focusing the distant field onto the photocathode. The lens arrangement is such that the size of the field projected onto the photocathode is approximately that photographed by the camera. Thus a lightning discharge photographed by the camera will also be detected by the Light Detection Unit. The purpose for focusing the field of interest onto the photocathode is to detect events occurring only in that field of view. The photomultiplier's sensitivity is adjusted such that it will respond to discharges which are focused on the cathode surface and therefore, even though bright flashes may occur outside the lens' field of view causing the surrounding area to be illuminated, they will not be detected by the unit.

The photomultiplier tube requires a negative high voltage which in this case was chosen as 1000 volts at about 1.5 millamperes. This requirement is met by the high voltage power supply (600-1000 VDC) shown below the Light Detection Unit in Figure 2.1.

When a lightning discharge occurs within the field of view of the Light Detection Unit, a positive pulse is produced at the last dynode of the photomultiplier tube. This positive pulse is fed into the laboratory by means of a 20' length of RG-11/U cable to the input of the discriminator unit. The characteristics of the pulse produced by the phototube are dependent upon several factors which will be considered in Chapter 3.

The Discriminator Unit contains the bulk of the electronic circuits in the discriminator section of the system shown in Figure 2.1. The purpose of the Discriminator Unit is to process the signal received from the photomultiplier tube such that ultimately a proper trigger pulse will be provided for the input of the trigger circuit in the Q-3 system. The Discriminator Unit contains a delay section which makes provision for selecting data at some maximum rate dictated by operating conditions. At the time that the unit was conceived, it was reasoned that at some future time it may be desirable to be able to limit the amount of data which could be obtained by the system. In an active storm events may be such that data taken at intervals of, say, 0.1 second would be adequate. Thus the unit may be operated such that an event will produce one pulse at the output and the delay unit will prevent successive pulses from reaching the output until the specified delay time has passed, regardless of the number of events which have been detected by the Light Detection Unit.

The Discriminator Unit also provides event marking signals for all auxiliary equipment used in close storm studies. Since the auxiliary equipments record continuously during an operating period, event marks provided by the Discriminator Unit aid in locating the time on these records for which events have been photographed and waveforms have been obtained. Event marking signals are available as either a contact closure or opening from a relay or a voltage pulse approximately 0.1 seconds in length.

The signal supplied to the sweep trigger circuit by the discriminator unit is a positive rectangular pulse of 100 volts and 100 microseconds in length. The rise time of this pulse is approximately 5.0 microseconds which is more than adequate for the Q-3 trigger circuit. The pulse is fed to the trigger circuit input via a 40' length of RG-11/U coaxial cable whose shunt capacity is 6 to 8 micromicrofarads per foot. Thus since a cathode follower drives the input to this line, the pulse shape is degraded only slightly by the cable.

The power requirements for the Discriminator Unit are; (1) +300 volts at 80 ma. and, (2) -300 volts at 20 ma. These requirements are met by one Lambda model 32M which supplies the positive voltage and by a Lambda model C-282M which supplies the negative voltage.

All power for the system is controlled by the Power Control Unit shown in Figure 2.1. This circuit has been designed to allow an adequate warm-up time for tube heaters before plate voltages can be applied. The Power Control Unit also contains an interlocking arrangement such that if one power supply fails, the other is removed from the system automatically. This prevents any possible damage to tubes and components resulting from power loss.

The Q-3 section of the system shown to the right of the dotted line in Figure 2.1 is part of the 10 kilocycle sferics system which has been in use at the atmospherics laboratory since 1959. It was necessary to make a minor modification on the Q-3 equipment in order to operate it as a part of the waveform discriminator system. This modification consists of an increase in the delay time between the waveform amplifier and the vertical amplifier for the indicator tube. The discriminator section was designed such that the Q-3 waveform section could be used with a minimum of changes. This was desirable because the Q-3 system is frequently used for other purposes, and therefore, it is convenient to be able to convert from one arrangement to the other quickly and easily. By constructing a set of equipment to perform the functions now handled by the Q-3 waveform section, the Q-3 equipment would not be necessary. To the present time a need has not arisen for additional waveform equipment.

When the Light Detection Unit detects light from a discharge which occurs in the field of interest, the vertical whip antenna associated with the Q-3 waveform amplifier receives electromagnetic energy from that discharge. The voltage produced at the antenna by the electromagnetic energy is fed into the waveform amplifier and amplified to many times the original value. This amplified signal is fed into 200 feet of Columbia type HH-1600 delay line. This delay line has a characteristic impedance of 3900 ohms and a delay of 1.0 microsecond per foot. Thus the line is terminated at the input of the vertical amplifier by a 3900 ohm resistor across which appears the waveform signal 200 microseconds after it has been applied at the input of the line by the waveform amplifier. In passing through the line the signal is attenuated as a result of the insertion loss of the delay line. At the time the signal is progressing through the delay line, the pulse from the photomultiplier is being processed by the Discriminator Unit and the object in this entire system is to get the indicator sweep to start at the same time, or a few microseconds before, the waveform signal reaches the vertical plates of the indicator tube. As it might be expected, a number of difficulties arise in solving such a timing problem. These difficulties will be described in later chapters of this thesis.

The system, the block diagram of which is shown in Figure 2.1, is capable of recording waveforms of electromagnetic radiations produced by a visible lightning discharge whose photograph is obtained by a moving-film camera. The camera in use with this system at present records information regarding azimuth and elevation as well as limited information concerning the luminosity of the discharge. Thus for an event which occurs within a given field of interest, data are recorded which after analysis yields facts concerning: (1) type of discharge, (2) waveform characteristics, (3) azimuth, (4) elevation, (5) luminosity, (6) number of strokes in the complete discharge, (7) time between separate strokes, and (8) total discharge time. The system also supplies event marks to devices such as the long-time-constant and short-time-constant field meters so that certain characteristics of the vertical electric field are fixed accurately in time with respect to other records. Also it is possible to monitor the photomultiplier tube to obtain further information concerning the luminous characteristics of the lightning discharge, but this information has not as yet become important to the investigation.

Figure 2.2 is a photograph of the Light Detection Unit shown mounted for operation on the periscope camera with which it is used. Figure 2.3 shows the discriminator section of the system shown in Figure 2.1 with the exception of the Light Detection Unit whose location is outside the laboratory.

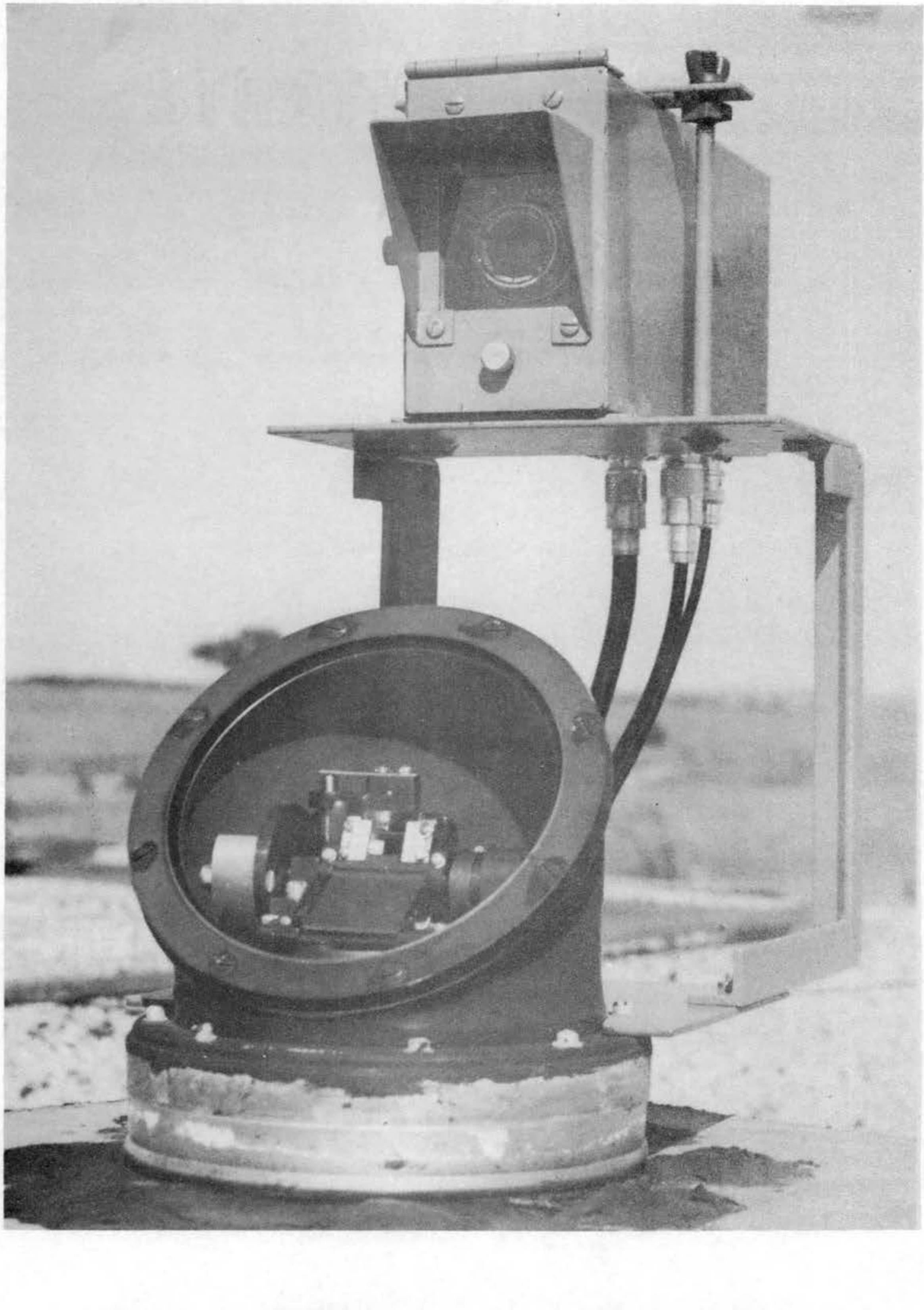

Figure 2.2. Light Detection Unit Mounted For Operation

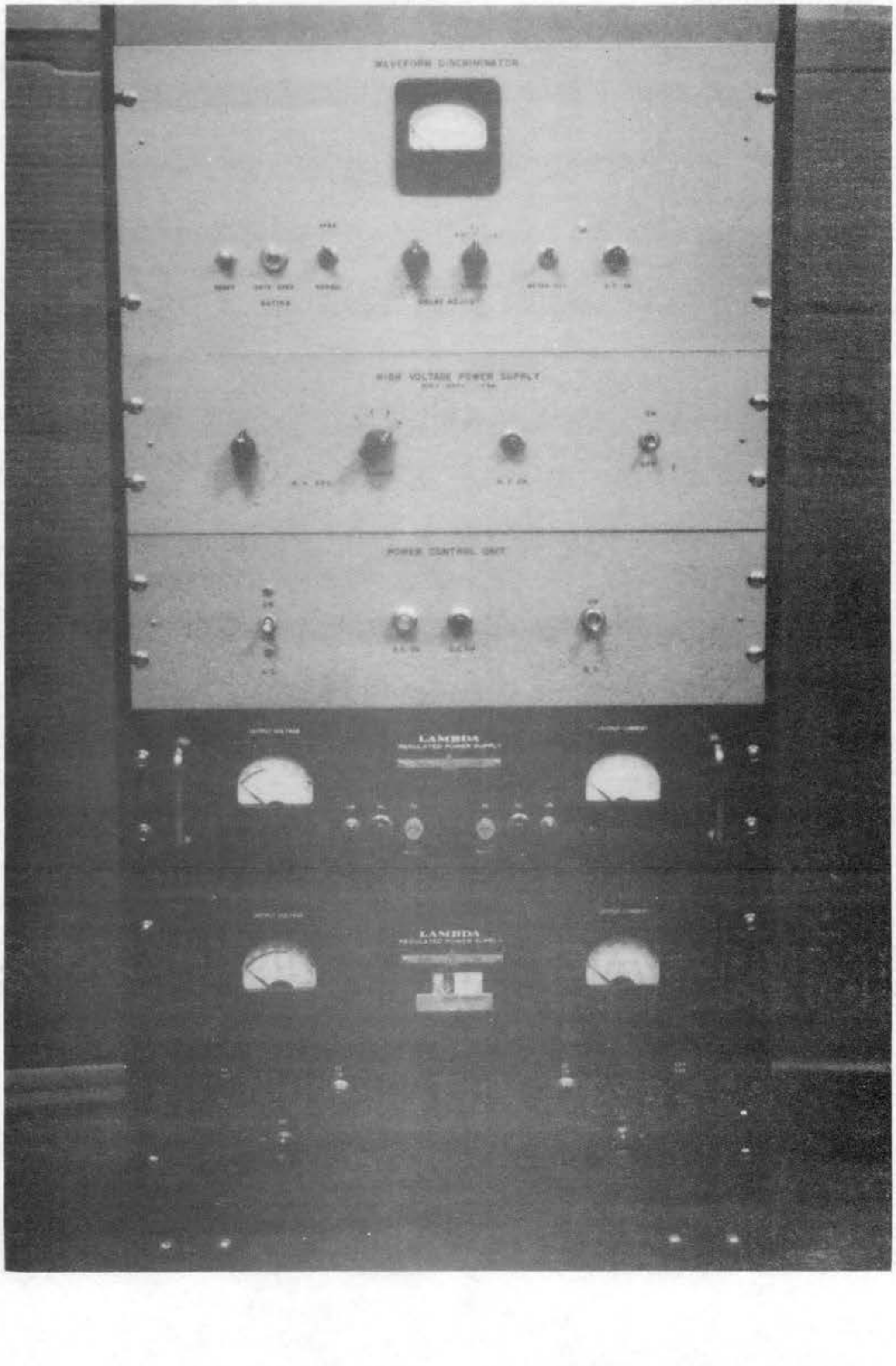

Figure 2.3. Waveform Discrininator System

CHAPTER III

LIGHT DETECTION UNIT

General

The Light Detection Unit is of primary importance to the entire Waveform Discriminator System. It is this unit that detects light from lightning discharges and produces signals upon which the rest of the system depends for operation.

Satisfactory operation of the Waveform Discriminator System was dependent upon the design of the Light Detection Unit and, therefore, special consideration had to be given to some of the design features. During a violent thunderstorm such as those which are common to Oklahoma from March to August inclusive, the characteristics of lightning activity are such that a particular area involved may be illuminated brightly without a definite cloud-to-ground or cloud-to-cloud discharge being visible. Also if one were interested only in a particular sector of storm activity as is the case with the Waveform Discriminator; a discharge slightly out of the field of interest would illuminate the observation site equally as well as one which occurred within the sector of interest. Hence an important phase of the design of the Light Detection Unit was to provide a means for discriminating against light producing events which occurred outside the sector of interest which sector, incidentally, happened to be the field of view of the camera for a given direction. It was also of importance that, in designing the unit to discriminate against unwanted events, the efficiency of response to events of interest is to be kept at a maximum.

To meet the conditions specified in the preceding paragraph, a design was made using a photomultiplier tube and a multiple element lens arrangement. This arrangement is shown schematically in Fig. 3.1.

As a result of the writer's having had considerable experience in the use of photomultiplier tubes for nuclear instrumentation, a photomultiplier tube was the logical choice in selecting a light sensing device for the Light Detection Unit. Although a host of devices exist which will detect light, a special type of photomultiplier tube was chosen to aid in providing the discrimination properties as mentioned in preceding paragraphs. The tube chosen was an RCA type 6342 - A multiplier phototube. The RCA - 6342 - A is a head-on type of multiplier phototube designed for use in scintillation counters for the detection and measurement of nuclear radiation and in other applications involving low level light sources. This tube, when operated under the proper conditions, will respond to light sources of such low intensity that they are undetectable by the human eye. Of course it is obvious that for nearby lightning discharges, one certainly does not need to worry about lack of light intensity, however, the head-on-type of photomultiplier tube exhibits certain characteristics which make it particularly desirable for the studies conducted at the Atmospherics Laboratory.

Referring to Fig. 3.1, it is seen that the purpose for the lens, which is an ordinary f/2.8 lens taken from a 35 millimeter camera, is to focus the distant field directly on the photocathode of the photomultiplier tube. With this arrangement, the photomultiplier tube may be operated at a sensitivity such that a lightning discharge focused on the

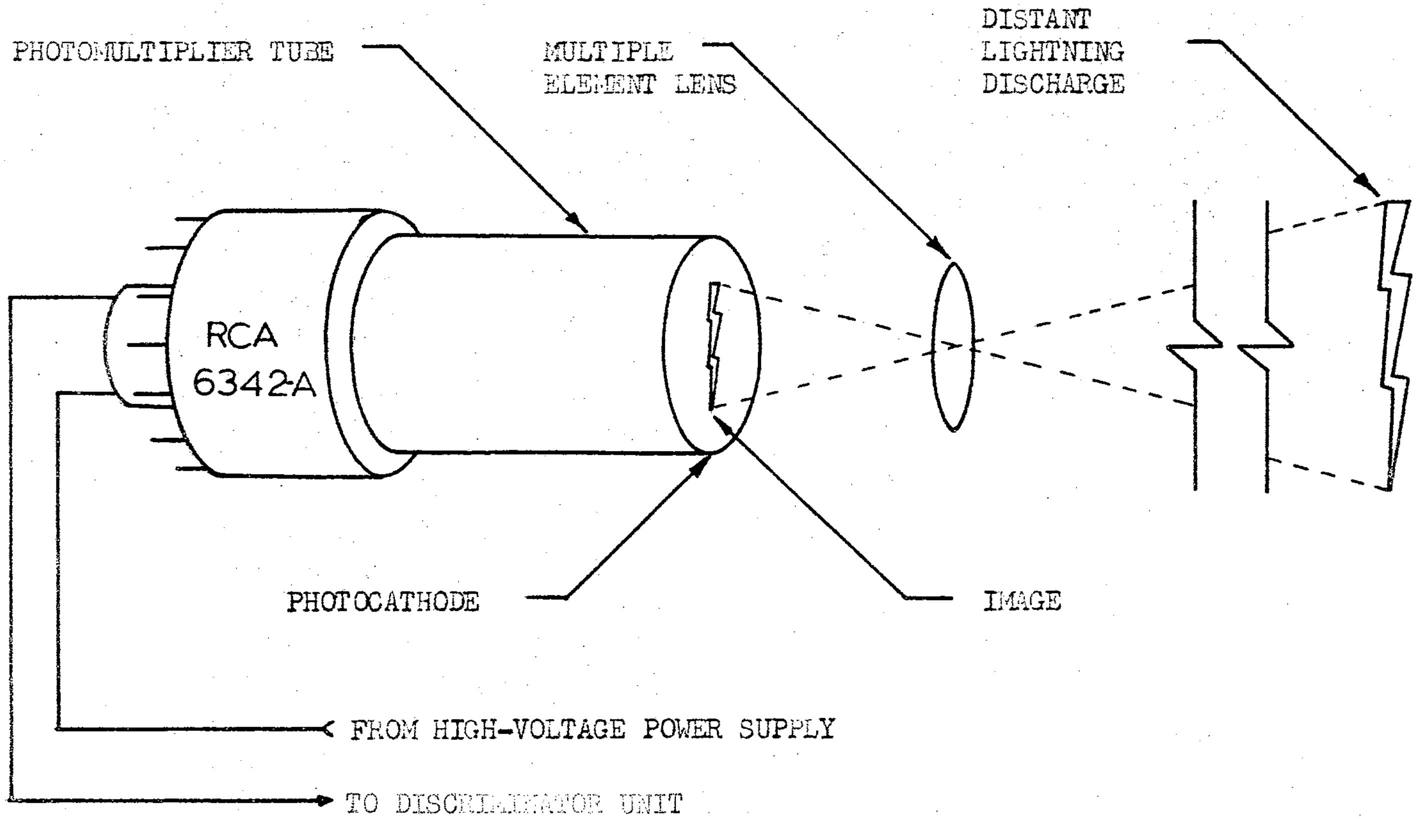

Figure 3.1. Schematic of Light Detection Unit

photocathode will produce a large pulse at the tube output, whereas one which occurs outside the field of view of the lens produces a relatively small pulse. Thus, by adjusting the threshold level of the circuitry into which the photomultiplier tube pulses are fed, the low level pulses can be rejected and the pulses above some minimum level corresponding to an event which has been focused on the tube cathode will be accepted.

It is of interest to note that with the Light Detection Unit designed and construçted as shown in Fig. 3.1, there are two means available for adjusting the sensitivity of the device. First, the lens aperature may be varied to control the amount of light reaching the photocathode surface and secondly, the gain of the photomultiplier tube can be changed by adjusting the voltage supplied to the tube. Usually, in setting up the device for operation, these controls can be adjusted to give the desired response to a given thunderstorm situation and the threshold level control available in subsequent circuitry can remain unchanged. This situation is expedient to the set up procedures since a threshold adjustment may be quite critical and, therefore, difficult to complete quickly.

Photomultiplier Tubes

Because of the importance of the photomultiplier tube to the Waveform Discriminator System it deserves special mention in this discussion of the Light Detection Unit. Since many types of multiplier phototubes exist, and in view of the fact that any tube with the same general characteristics as the RCA 6342 - A could have been used in the light detection unit, it is appropriate to discuss the characteristics of multiplier tubes in general rather than those of one specific tube. An exhaustive study of photomultiplier tube theory and operation can not, of course, be given but some of their salient characteristics will be discussed.

General Operation

The combined effects of photoelectric emission and secondary emission provide the basis of the modern photomultiplier tube.

The working principle of most modern multiplier phototubes is as follows: light falling on a light sensitive photocathode causes it to emit free electrons, which are drawn away from the photocathode by an electrode having a more positive potential. These photoelectrons are then focused by various means on a secondary emission stage. Each primary electron striking this secondary stage will free more electrons, which are drawn to the next, more positive, secondary emission stage. This process is then repeated, each stage having a more positive potential than the previous one. The electron emitted from the last secondary stage are collected at an anode and the resulting amplified current is passed to the accompanying circuitry (see Figure 3.2).

Photoelectric Emission[1]

Two general rules were developed early in research on photoelectric effects. One of these states that the emission current is proportional to the incident light intensity. The second states that the maximum energy of released electrons is directly proportional to the frequency of the incident light, but is not altered by the total intensity of incident light.

Assuming, according to the quantum theory that the energy of light

---

[1] DuMont Laboratories, Du Mont Multiplier Photo-tubes, (Second Edition, 1960), pp. 1-17.

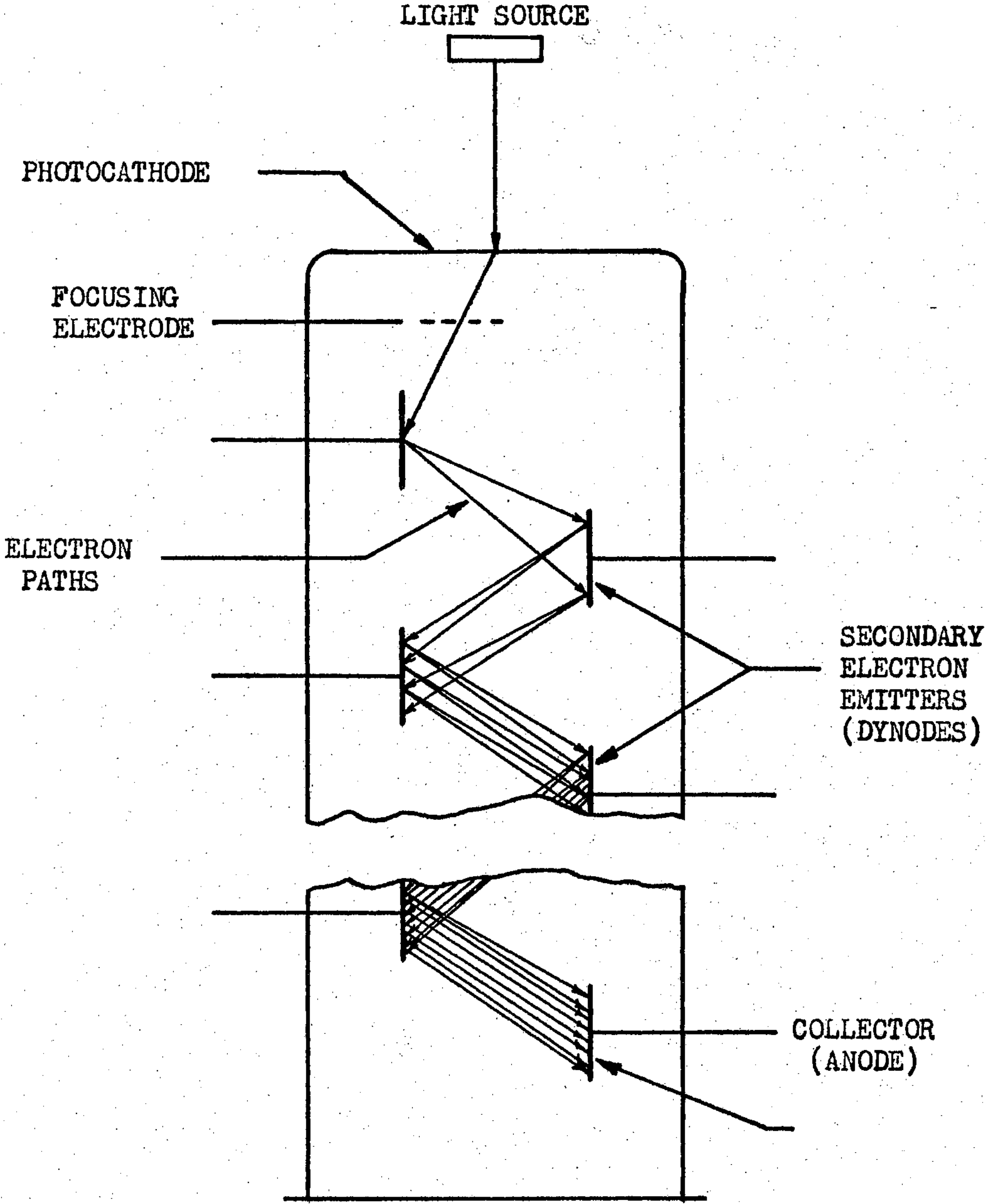

Figure 3.2. Schematic of Photomultiplier Tube

is conveyed in packets or quanta, Einstein reasoned that these quanta interacted with individual electrons and gave them sufficient energy to escape from solids. He expressed this in the form:

$$hf = E + e\phi \tag{3.1}$$

h = Planck's constant
f = frequency of incident light
ϕ = work function of the substance (3.2)
E = initial kinetic energy of the photoelectron
e = electronic charge.

The work function, δ, of a substance is defined as the least amount of energy that must be supplied to remove an electron from a substance. δ depends upon the nature of the solid material and differs widely for various elements.

A similar work function has been found for thermionic emission. The values of δ, for a given substance, are in approximate agreement for the two types of emission. It is apparent from Einstein's photoelectric equation that for a given value of δ there exists a certain frequency below which the energy supplied by the incident quanta will be less than the work function. This is known as the threshold frequency. Associated with the threshold frequency is a threshold wave length. For incident radiation having the threshold wave length, the initial kinetic energy of the photoelectrons will be zero. Radiation of longer wave length can produce no electrons.

The efficiency of interaction between photons and electrons varies with the wave length of incident radiation. Thus, there is usually some wavelength at which emission of the more loosely bound electrons reach a maximum. As the wavelength of the radiation is made shorter, the energy of the incident quanta becomes great enough to cause emission of more tightly bound electrons. With some cathode materials, this effect may produce other peaks in the photoemission yield at shorter wavelengths.

Pure metals with low work functions, such as the alkali metals found early applications as photoemitters. However, their very low quantum yield, i.e. number of electrons emitted per incident quanta, led to the use of composite photocathodes. Cesium, the most efficient photoemitter of the alkali metals in the visible and infrared range of the spectrum is generally used as one of the component elements of the photocathode.

The spectral responses and photoemissive efficiencies of composite photocathodes may vary widely with such factors as thickness, component materials and their purity, processing methods, direction of illumination, i.e. whether used as an opaque or semitransparent cathode, etc. However, photocathodes in present-day use are satisfactorily reproducible.

Secondary Emission

If a solid surface is bombarded by electrons with an energy of the order of 100 volts, it is observed that electrons are emitted from the bombarded area. The number of secondary electrons is dependent on the type of surface, the energy of the bombarding electrons, and the angle of incidence of the primary electrons. The ratio of the number of electrons leaving the surface to the number incident is called the secondary emission ratio, and is designated by the Greek letter δ.

The dependence of δ on the energy of the primary electron is illustrated in Figure 3.3 for two commonly used surfaces. The general shape of the curve is the same for all substances which have been investigated. There is a rapid rise in δ as the energy of the primary electron is increased because the primary electron can then provide an increased number of electrons in the bombarded surface with enough energy to escape. If the energy is increased too far, however, some secondary

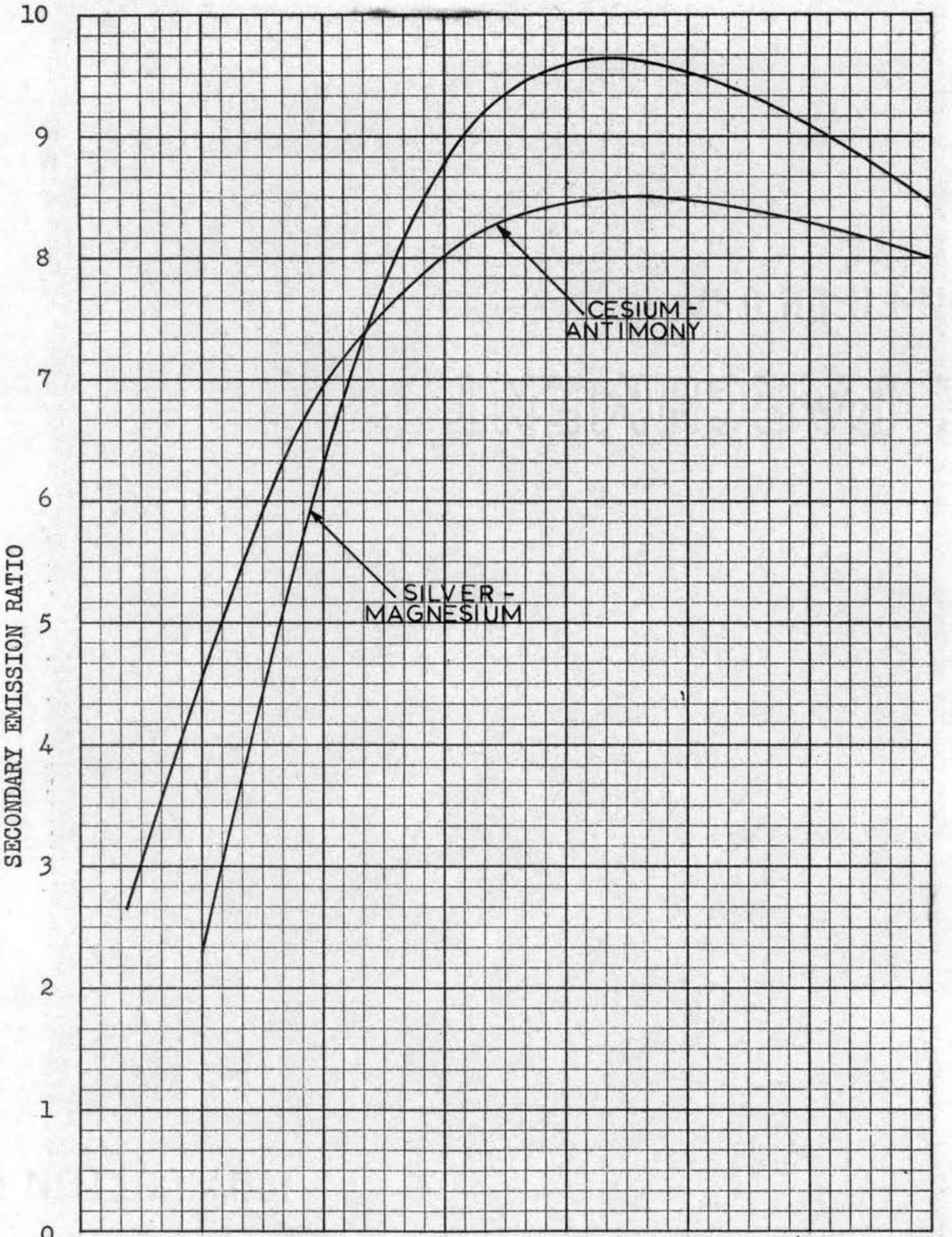

Figure 3.3. Variation of Secondary Emission Ratio With Primary Voltage

electrons are produced too deeply in the surface to be able to escape. Thus for very high energies δ decreases with increasing energy. Somewhere between these two extremes δ reaches a maximum. This occurs for a primary energy in the range of 200 to 1000 volts for most materials investigated.

δ is also dependent on the incident angle of primary electrons with high energy (greater than 100 volts), becoming greater as the primary electrons trajectory makes a smaller angle with the bombarded surface. For primary energies of the order of 100 volts or less, δ is relatively independent of the angle of incidence of primary electrons.

Metals for which the temperature dependence of δ has been investigated have shown no change in δ in the range 0 to 1700°C.

Little or no correlation has been found between the work function of a material and its secondary emission ratio, although materials showing high thermal and photoelectric emission are generally good secondary emitters.

Thermionic Emission

The importance of thermionic emission to modern multiplier tubes lies in the fact that it is one of the major producers of photomultiplier tube noise. Thermionic emission in multiplier tubes has been the source of many applications problems. Photoelectric emission and secondary emission are important because of their necessity, whereas thermionic emission is of equal importance because of its undesirable effect.

Since photocathodes have a comparatively low work function, a certain amount of thermionic emission will take place, even at room temperature. Such thermionic current will not always be negligible, where one is dealing with very low light levels. This current along with its associated fluctuations will be amplified by the multiplier just as the photocurrent is amplified and these fluctuations will show up as noise at the anode. There are several ways of minimizing this effect. One obvious way is to cool the tube. Since the emission is strongly temperature dependent, the noise due to this effect may be reduced as much as 100 - fold by cooling from room temperature to-160°C. Another way of minimizing thermionic current is to construct the tube such that photocathode material is deposited only on those areas where the light to be detected is incident. In this way one eliminates thermionic current from unused cathode areas.

To obtain a rather exact picture of the thermionic emission to be expected at various temperatures, the Fermi-Dirac distribution is employed to define the electrons which arrive at the surface of the metal with escape energies. The Fermi-Dirac distribution may be expressed in various ways and the reader may easily verify for himself that these are equivalent.

Using the energy of the electrons as the independent variable,

$$\partial N = \frac{3N}{2W_o^{3/2}} \quad \frac{W^{1/2} \partial W}{\left\{ \exp\left[(W-W_o)/kT \right] + 1 \right\}} \qquad (3.3)$$

which is the well known Fermi-Dirac distribution formula based upon Quantum mechanics. In equation 3.3 which gives the energy distribution for N electrons as a function of temperature, N is the total number of electrons, W is the electron energy, W_o is the electron energy at $T = 0^oK$, T is absolute temperature in degrees Kelvin, and k is Boltzmann's constant.

Inserting the value of W_o,

$$W_o = \frac{h^2}{2m}\left(\frac{3N}{8\pi}\right)^{2/3}$$

into (3.3) yields

$$\partial N = \frac{(2m)^{3/2}\,4\pi}{h^3}\;\frac{W^{1/2}\,\partial W}{\left\{\exp\left[(W-W_o)/kT\right]+1\right\}} \qquad (3.4)$$

where m is electron mass and h is Planck's constant.

Writing $p^2 = 2mW$, where p is momentum;

$$\partial N = \frac{2}{h^3}\;\frac{4\pi p^2\,\partial p}{\left\{\exp\left[(W-W_o)/kT\right]+1\right\}} \qquad (3.5)$$

and remembering that $v = p/m$, v being the velocity:

$$\partial N = 2\left(\frac{m}{h}\right)^3\frac{4\pi v^2\,\partial v}{\left\{\exp\left[(W-W_o)/kT\right]+1\right\}}\,. \qquad (3.6)$$

To investigate the flow of electrons across a metal surface, equation (3.6) is the useful form.

Defining three rectangular axes in the metal:

$$\partial v_x\,\partial v_y\,\partial v_z = 4\pi v^2\,\partial v$$

where $\partial v_x, \partial v_y, \partial v_z$ are the increments in velocity corresponding to ∂v.

Therefore,

$$\partial N = 2\left(\frac{m}{h}\right)^3\frac{\partial v_x\,\partial v_y\,\partial v_z}{\left\{\exp\left[(W-W_o)/kT\right]+1\right\}}\,. \qquad (3.7)$$

Changing the axes to cylindrical polars χ, ρ, θ, W may be written $W_\chi + W_\rho$, and

$$\iint_{-\infty}^{\infty} \frac{dv_y \; dv_z}{\left\{\exp[(W-W_0)/kT] + 1\right\}} = \frac{2\pi}{m} \int_{-\infty}^{\infty} \frac{dW_\rho}{\left\{\exp[(W-W_0)/kT] + 1\right\}} \cdot$$

Also, since $W_x = \frac{1}{2}mv_x^2$,

$$N_x = 2 \left(\frac{m}{h}\right)^3 \int_{W_T}^{\infty} \frac{dW_x}{m} \int_0^{\infty} \frac{2\pi}{m} \frac{dW_\rho}{\left\{\exp[(W-W_0)/kT] + 1\right\}} \cdot$$

Now writing $\exp[(W_\rho + W_x - W_0)/kT] = \ell$

yields $dW_\rho = \frac{kT}{\ell} \, d\ell$

and $\displaystyle\int_0^{\infty} \frac{dW_\rho}{\left\{\exp[(W-W_0)/kT] + 1\right\}} = kT \int_{\ell_0}^{\infty} \frac{d\ell}{\ell(\ell + 1)} = kT\log(1+\ell_0^{-1})$

where $\ell_0 = \exp[(W_x-W_0)/kT]$,

therefore $\displaystyle N_x = \frac{4\pi mkT}{h^3} \int_{W_B}^{\infty} \log\left\{1 + \exp[(W_0-W_x)/kT]\right\} dW_x.$ (3.8)

$$\frac{4\pi m(kT)^2}{h^3} \exp[-(W_T-W_0)/kT].$$

But $W_T - W_0$ is the net work function, which, expressed in electron volts, is ψ.

Therefore $\displaystyle N_x = \frac{4\pi m(kT)^2}{h^3} \exp(-e\psi/kT).$ (3.9)

N_x is the number of electrons escaping per second at temperature T from unit area of the surface of a metal, the work function of which is ψ.

The corresponding current is $eN_x = I$, where

$$I = AT^2 \exp(-e\varphi/kT) \qquad (3.10)$$

and

$$A = \frac{4\pi emk^2}{h^3} = 1.204 \text{ X } 10^6 \text{ A/meter}^2\text{/degree}^2 .$$

This equation was first derived, using thermodynamical methods, by S. D. Dushmann. An earlier equation based on the Maxwell distribution was derived by O. W. Richardson.

Equation (3.10) shows that the rate of variation of the thermionic current with temperature is high. For this reason it is usual to plot logarithmic values. From equation (3.10)

$$\log_{10} I = \log_{10} A + 2\log_{10} T - 2.3\frac{e\varphi}{kT} . \qquad (3.11)$$

When the total emission of a metal is measured,

$$y = \log_{10} I - 2\log_{10} T$$

is graphed against $x = 1/T$. The result is a straight line of gradient $2.3\ e\varphi/k$, the intercept on the y axis being $\log_{10} A$. The values of φ found from this gradient agree well with those measured by other methods, but the value of A is only about one-half of what would be expected from $4\pi mk^2/h^3$. If it is assumed that in most metals there are two valency electrons which occupy the "conduction band", the value is in agreement with theory.

Miscellaneous

Because of their fundamental importance to the operation and application of multiplier tubes in general, three types of electron emission have been discussed in some detail. In addition to the types of electron emission, there are various other effects which must be considered when choosing multiplier tubes for specific applications. Some of the most important of these effects are: (1) Dark Current, (2) Noise in Signal, (3) Transit time effects, (4) Shielding and, (5) Fatigue Effects. Further detailed discussion of multiplier tube characteristics would be inappropriate in this thesis, however, the interested reader should refer to some of the more recent literature[2,3,4] in his search for additional information.

Associated Circuitry

Although the RCA 6342-A ordinarily requires a voltage source of 1200 to 1500 volts for normal high gain operation, experimental tests showed that for an application such as in the light detection unit a 1000 volt supply would be adequate. In order that personnel exposure to high potential be kept to a minimum, the voltage source is negative with respect to ground. This allows the photocathode to be operated at negative high-voltage and eliminates the need for having the anode, which is usually the signal output electrode, at positive high potential.

As explained previously in this chapter, the multiplier tube requires that each successive secondary emission stage be operated at a more positive potential than the previous one. To obtain the "potential step" from a given supply voltage, a resistance voltage divider is commonly used although, for special applications, other techniques are

---

[2] J. B. Birks, Scintillation Counters, (New York, 1953), pp. 21-38.

[3] B. R. Linden, "New Photomultipliers and Operating Data," Nucleonics, Vol. 12, No. 3, March, 1954, pp. 20-23.

[4] A. Sommer, Photoelectric Tubes, (London, 1951).

available. The voltage divider is arranged such that a tap is provided for each dynode in the multi-stage structure. One simple form of voltage divider uses equal values of resistance between each stage, except for a doubled or tripled value between the cathode and first dynode. As a general rule the total divider resistance must be low enough so that the current through it will be five to ten times the greatest average current supplied to any single stage.

Figure 3.4 shows the voltage divider designed for use in the Light Detection Unit. The design of voltage dividers for photomultipliers depends upon the many factors involved in specific applications as well as the characteristics of a particular tube chosen for some application. Hence, no organized procedure exists for the design of photomultiplier dividers.

The design of the divider shown in Figure 3.4 was based upon experimental work on photomultiplier tubes conducted by the writer in 1958. Those familiar with scintillation counting techniques know that, for a given pulsed light input, the anode current is an index to tube performance. The divider in this unit was designed with this fact in mind since the tube must respond to light pulses in the case of lightning discharges.

Figure 3.5 shows the potential distribution across the dynode structure for the divider shown in Figure 3.4. It will be noted that the potential difference between the cathode and the first dynode is considerably greater than that between any of the remaining elements in the tube. This increase in voltage is desirable because of the importance of a high secondary emission ratio in the early stages. Obviously, the gain of the tube is highly dependent upon the number of electrons emitted

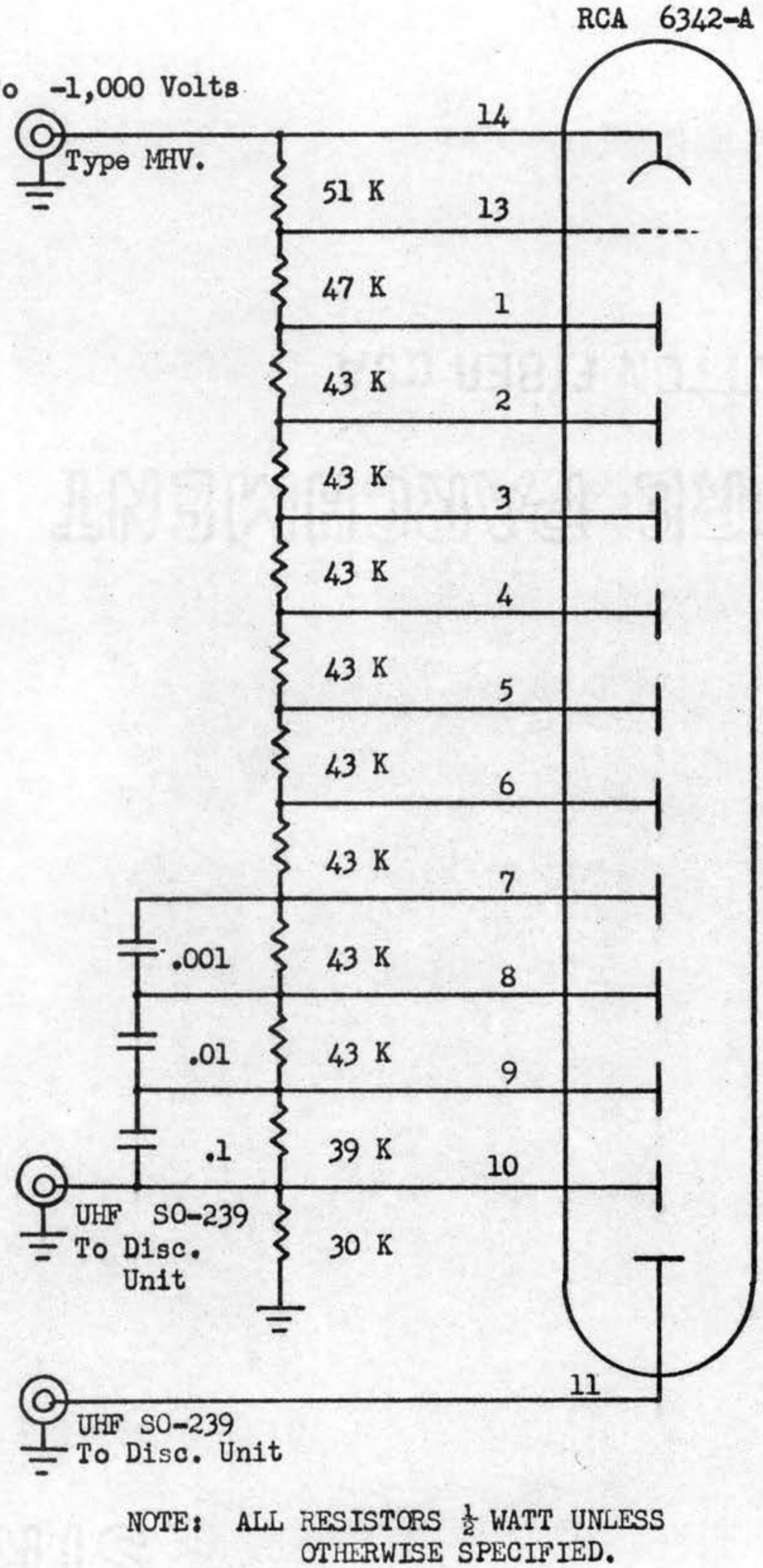

NOTE: ALL RESISTORS $\frac{1}{2}$ WATT UNLESS OTHERWISE SPECIFIED.

Figure 3.4. Diagram of Photomultiplier Tube Voltage Divider

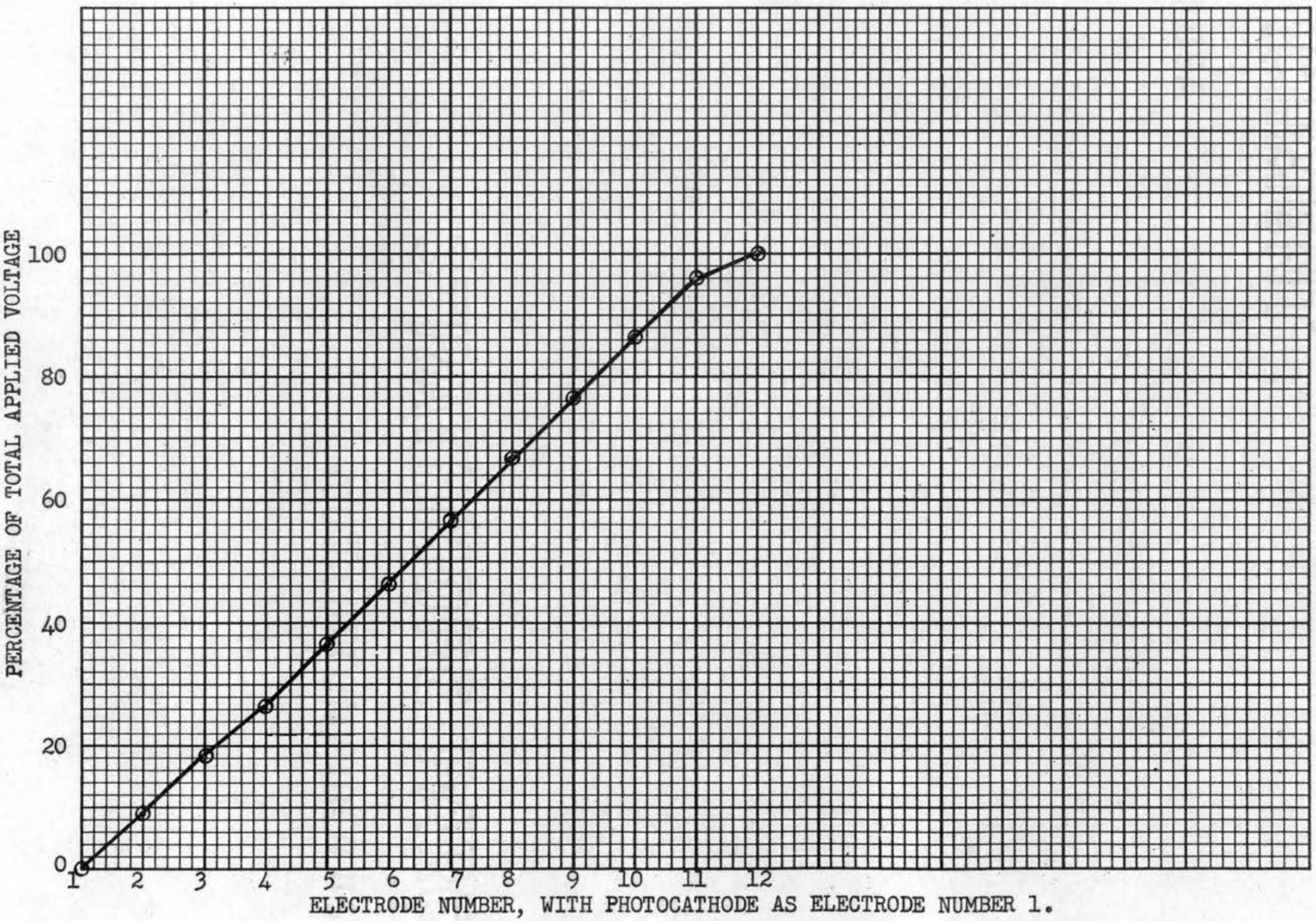

Figure 3.5. Dynode Voltage Distribution

in the early stages and the higher-than-normal potential insures a relatively large emission current. The focusing electrode (electrode number two) is a structure placed between the cathode and the first dynode for the purpose of improving collection efficiency. This element is normally operated at a potential about half way between that of the cathode and the first dynode. Experimental results have shown that for ordinary applications where high gains are required, better results are obtained if the tube is operated with higher potentials between the first three or four electrodes. For the Light Detection Unit high gain operation was not necessary. Between electrodes 3 and 11 the potential distribution is linear and then between 11 and 12 increases and then decreases again after number 12. A potential distribution such as that between electrode 11 and ground has been found to provide better protection against space charge limiting than if the distribution were linear over the remaining part of the voltage divider.

If peak pulse outputs are drawn from the tube, the bleeder current will be momentarily decreased and therefore the voltage will fall. This results in a type of degenerative feedback which may lead to a non-linear response from the photomultiplier. In this case it is necessary to bypass the bleeder resistance for the last few stages. In general the values of the capacitors are chosen such that the RC product between them and the bleeder resistors will be ten to twenty times larger than the longest pulse to be detected. The capacitors shown in Figure 3.5 serve to bypass the last three stages of the voltage divider.

The Lens

The lens used for projecting the image of the distant field onto the photocathode is an f/2.8 Wollensak, No. B90202 lens having a focal length of 50 millimeters. Focusing is accomplished by a lead screw type arrangement which moves the photomultiplier carriage with respect to the fixed position lens. If necessary the lens aperature can be reduced to f/22.

Performance of Unit

Figure 3.6 is a photograph of the interior of the light detection unit. This unit has been tested on several local storms in both 1960 and 1961 and has been found entirely satisfactory for the purpose intended. Although it was never intended that the unit perform under open daylight conditions, the writer had hopes that some arrangement could be made to operate the unit under conditions of heavy cloudiness during daylight hours. Although this has not as yet been achieved, it is believed that subsequent tests might yield satisfactory results.

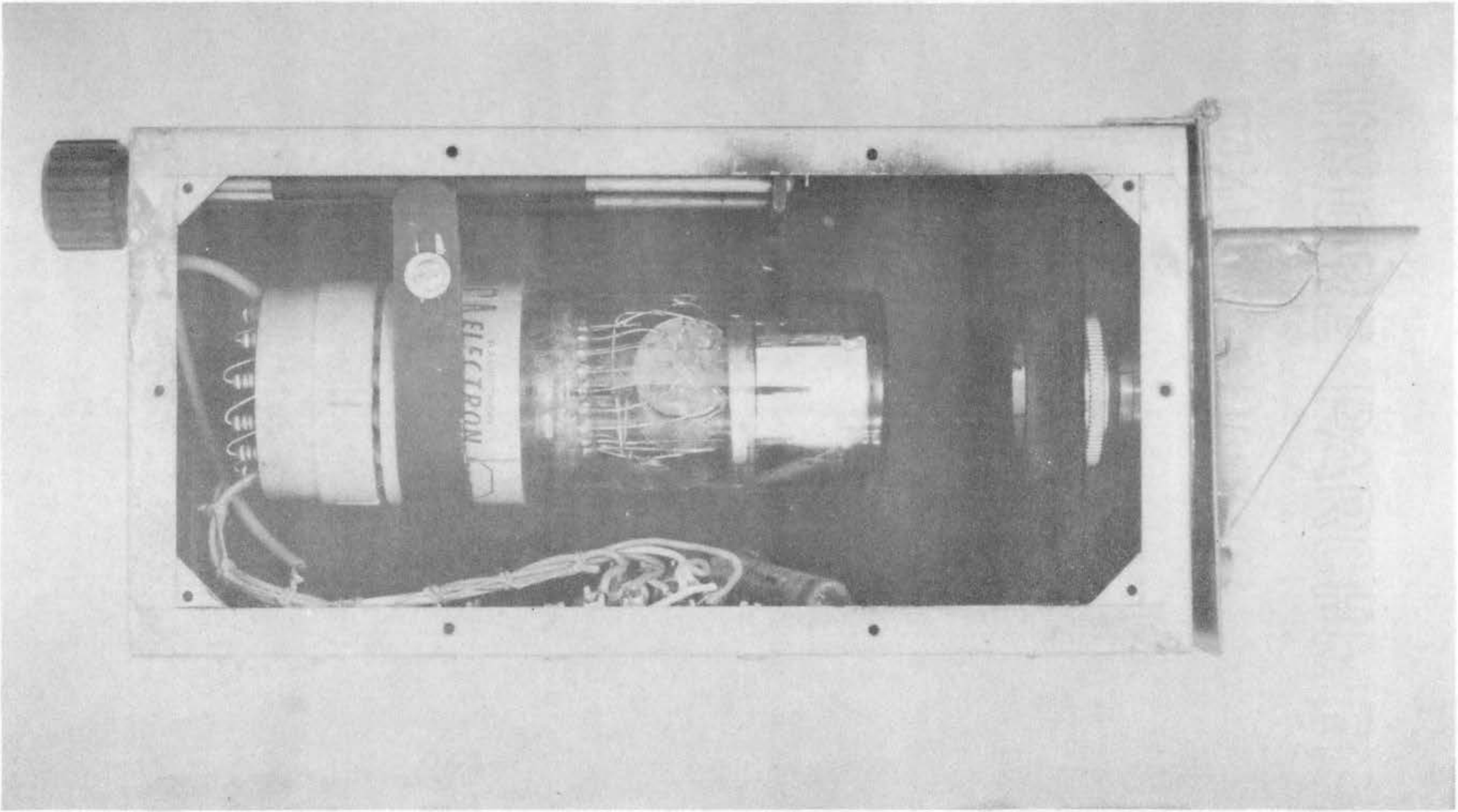

Figure 3.6. Interior View of Light Detection Unit

CHAPTER IV

THE DISCRIMINATOR UNIT

The Discriminator Unit contains the major portion of the signal processing electronics in the Waveform Discriminator System. The signal from which this unit operates is supplied by the last dynode of the photomultiplier tube. The last dynode was chosen because it supplies a positive pulse rather than the negative one which is available at the anode. From the photomultiplier pulse, the Discriminator Unit produces a pulse of the required rise-time and duration to trigger the waveform sweep circuit in the Q-3 system. This unit also provides, simultaneously, signals to all auxiliary devices for the purpose of indicating, on their records, that an event has been detected. A schematic diagram of the Discriminator Unit is shown in Figure 4.1.

Trigger Section

The trigger section of the Discriminator Unit consists of tubes V-1, V-2, V-3, V-6a and their associated circuitry. The pulse from the photomultiplier tube is supplied to the input of the trigger section through a 20' length of RG-114/U coaxial cable. Although the capacity of the coaxial cable is rather large to be driven through the output impedance of the photomultiplier tube which is approximately 100,000 ohms, the rise-time of the luminosity of lightning discharges is in the range of 100 to 1000 microseconds and, therefore, the rise time of the R-C circuit comprised

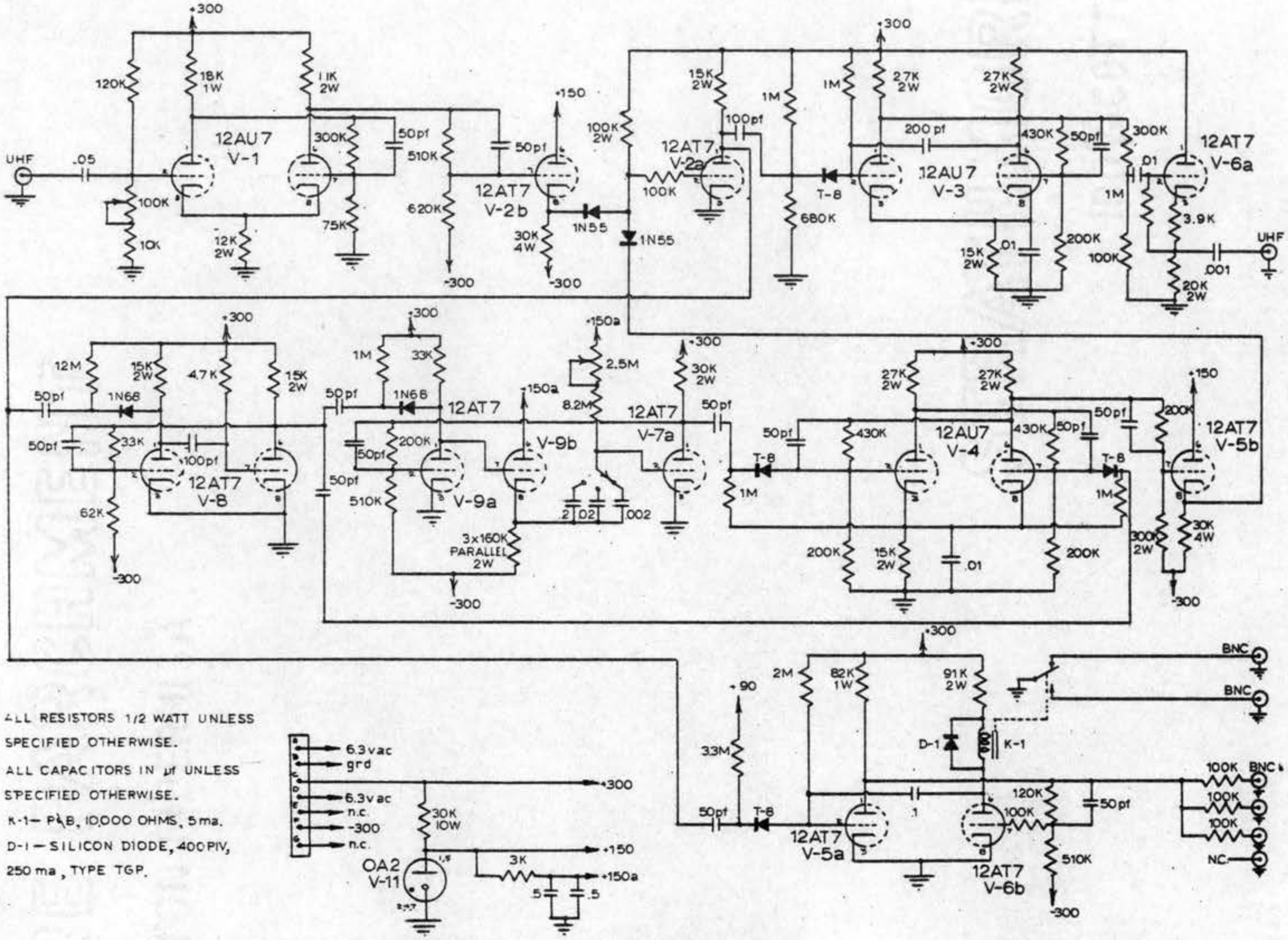

ALL RESISTORS 1/2 WATT UNLESS SPECIFIED OTHERWISE.

ALL CAPACITORS IN µf UNLESS SPECIFIED OTHERWISE.

K-1— P&B, 10,000 OHMS, 5 ma.

D-1 — SILICON DIODE, 400PIV, 250 ma, TYPE TGP.

Figure 4.1. Schematic Diagram of Discriminator Unit

of the output resistance of the photomultiplier and the cable capacity does not measurably affect the pulse produced at the tube output. The rather long rise-time of lightning discharge luminosity determined the design of the first stage of the trigger section.

When the Discriminator Unit was first conceived, little was known about the luminous characteristics of lightning discharges. It was assumed that the light produced by a lightning discharge existed for as short a time as 5 to 10 microseconds and that the luminosity peaked in, at most, 5 microseconds. Subsequent tests revealed that this assumption was in error but not before another type of input circuit had already been built into the Discriminator Unit. The first input circuit built for the unit was a conventional monostable multivibrator. It was intended that the anode output pulse of the photomultiplier be supplied to the cable through a cathode follower amplifier and that the pulse, upon reaching the unit's input would trigger the multivibrator. The anode pulse, if as short as 10 microseconds, would have been more than adequate to trigger the multivibrator. Before construction was complete on the Discriminator Unit, tests on the Light Detection Unit revealed that the luminosity rise-time is indeed much greater than at first suspected.

Because of the large rise-time of the light produced by lightning discharges, the circuit consisting of both sections of tube V-1 and its associated components in Figure 4.1 was designed for the input to the Discriminator Unit. This circuit is a Schmitt[1] type circuit which is designed such that the normally-off section of the tube is biased within

---

[1] Jacob Millman and Herbert Taub, Pulse and Digital Circuits, (New York, 1956), pp. 164-168.

its grid base rather than beyond cutoff as is usually the case with Schmitt trigger circuits. Such an operating condition allows the input level to be adjusted so that the circuit can be triggered from an input signal whose amplitude rises above some given level regardless of its rise-time. This factor is very important to the operation of the entire Waveform Discriminator System. Most trigger circuits require inputs having rise-times on the order of 1.0 microsecond for proper operation. Such a pulse was simply not available from the photomultiplier output as a result of the luminous characteristics of lightning.

The pulse from the photomultiplier may have an amplitude greater than 100 volts and, as mentioned previously, the rise-time of this pulse may be as great as 1000 microseconds. If the waveform trigger circuit were to operate only on the peak value of such a pulse or at even the half-amplitude point, the sferic from the discharge producing this pulse would have long since reached the vertical plates of the indicator tube by the time a trigger pulse reached the sweep circuit. The result is that, in such case, the waveform information would be hopelessly lost. From the preceding discussion, it may be observed that it is imperative that the trigger producing circuits operate on the first few volts of the photomultiplier tube output. Also the circuit to which this pulse is supplied should be independent of rise-time. The Schmitt circuit shown in Figure 4.1 satisfies these requirements.

Tubes V-2 and V-5b together with the two IN-55 diodes and associated components comprise a gate circuit. The gate circuit is designed such that ordinarily both the cathode of V-2b and the cathode of V-5b are at such a voltage level that the grid of V-2a is held below cutoff and consequently the plate of V-2a is near +300 volts. Also it will be observed that if the cathode of V-5b is below cutoff for V-2a, positive pulses at the cathode of V-2b cannot raise the grid of V-2a into conduction. Hence the circuit can be used as a gate to control the signal into subsequent circuitry. It will be assumed, for the present, that the cathode of V-5b is in a state which will allow pulses at the cathode of V-2b to reach the grid of V-2a and thereby produce negative pulses at the plate of V-2a. When the Schmitt circuit is triggered, a positive pulse is produced at the plate of V-1b which is supplied to the grid of V-2b and thus produces a positive pulse at its cathode. This positive pulse appears at the grid of V-2a and results in a negative pulse being produced at its plate. The negative pulse appearing at the plate of V-2a is differentiated by the 100 micromicrofarad capacitor and the 680,000 ohm resistor by which coupling is made to the succeeding circuit. The negative portion of the differentiated pulse passes through the diode whose anode is connected to the grid of V-3a.

Tube V-3 and its associated circuitry comprises a monostable multivibrator[2] which is triggered by the negative pulse which passes through the T-8 diode from the gate circuit. The monostable multivibrator was designed for the purpose of providing a shaped pulse to trigger the waveform sweep circuit in the Q-3 system. When the monostable circuit is triggered a positive pulse is produced at the plate of V-1a. This pulse is 160 volts in amplitude and 100 microseconds long. The pulse length required for triggering the waveform sweep is relatively unimportant so long as it is greater than one to two microseconds, however, the risetime of the trigger pulse is of importance and should not be greater than

---

[2] Millman and Taub, pp. 174-198.

five microseconds. The rise-time of the pulse at the plate of V-3a is approximately 3.0 microseconds. Since a 40' length of RG-114/U coaxial cable is required to get the trigger pulse to the waveform sweep circuit, a cathode follower (V-6a) was designed to drive the cable capacity. The pulse from the plate of V-3a is divided in amplitude by a factor of about 5 in passing through the cathode follower circuitry. Thus a pulse 30 volts in amplitude reaches the input to the sweep circuit. A 30 volt pulse is more than adequate to trigger the waveform sweep.

Time Delay System

Frequently during the thunderstorm season in Oklahoma, highly active thunderstorms occur which produce a high rate of both cloud-to-ground and cloud-to-cloud discharges. Also those discharges, in general, contain a high multiple stroke count. Therefore, if the waveform discriminator were operating on such a storm, the data recorded on the waveform film could be spaced so closely together that analysis would be difficult. This would be particularly true for film speeds less than 200 inches per second. Thus if it were possible to select discharge events at some more reasonable rate, the data could be presented on the film at intervals which would expedite analysis. The time delay section of the Discriminator Unit performs the function of selecting discharge events and provides three sampling rates; 0.01 seconds, 0.10 seconds, and 1.0 second.

The time delay section is essentially a time controlled gating device which is operated by the signal from the gate (V-2a) output. The delay section consists of tubes V-4, V-7a, V-8, V-9 and their associated circuitry. The action of this circuit is as follows: when a negative pulse appears at the plate of V-2a, it is coupled to the plate of V-8a. A negative pulse at the plate of V-8a serves to trigger the monostable multivibrator consisting of V-8 and its related components. Upon triggering, this monostable circuit produces a positive pulse at the plate of V-8b. The negative transient of the pulse produced at V-8b is coupled to the plate of V-9a and also to the grid of V-4b. The negative pulse at the grid of V-4b changes the state of the bi-stable multivibrator[3] immediately, which in turn drives the cathode of V-5b to a level which holds the gate circuit in the off position and, therefore, prevents any additional pulses from appearing at the plate of V-2a. At this point the delay circuit is in operation and prevents the waveform sweep from being triggered. The same pulse which is applied to the grid of V-4b is also applied at the plate of V-9a and serves to place the time delay circuit into operation. The time delay circuit consists of V-9 and V-7a and is a type of monostable multivibrator in which a cathode follower is utilized to recharge the timing capacitor. When the negative transient from the plate of V-8b reaches the plate of V-9a the time delay circuit is triggered and a positive pulse is produced at the plate of V-7a. The leading edge of the pulse produced at the plate of V-7a has no effect on the bistable circuit but the trailing edge provides a negative transient to the grid of V-4a which triggers the flip-flop leaving it in normal state and opening the gate circuit so that the next pulse from the Light Detection Unit will recycle the delay section.

All the above operations act together to limit the rate at which trigger pulses will reach the output of the Discriminator Unit. The sampling rate is selected by a switch which provides three different

---

[3] Millman and Taub, pp. 140-173.

timing capacitors to be placed between the cathode of V-9b and the grid of V-7a. Thus, if the timing section were set for a 1 second rate, then the first pulse into the unit would provide one trigger pulse at the output but subsequent pulses would have no effect until the 1.0 second delay had expired, at which point a pulse would recycle the action.

Ordinarily a time delay section would not be operated such as the one designed for the Discriminator Unit. In many cases neither the fast monostable circuit nor the bistable circuit would be necessary. However, because of the long delay time of the delay circuit, the rise-time of the gating pulse produced by it is not adequate to provide sharp gate action. Because of this factor the bistable multivibrator was designed to operate from the timing circuit to provide a fast-acting gating pulse. This circuit has a rise-time of about 3 micro-seconds and a fall-time of about 5 microseconds. Also, because of the large capacity involved, the time delay circuit does not recover as rapidly as one having a shorter delay time. This characteristic of the circuit allows time for the gate circuit to open and a trigger pulse to reach the plate of V-9a before the timing circuit can recover. This is a highly undesirable effect which produces ambiguity in the time delay. For this reason the monostable circuit comprised of V-8 was designed to allow a short time for the timing circuit to recover before a trigger pulse is applied.

Event Marking Circuit

The circuit comprised of V-5a, V-6b and their associated components was designed for the purpose of providing signals to auxiliary equipment. This circuit is also a type of monostable circuit with a plate circuit relay in series with the plate of V-6b. This circuit is also triggered by the negative pulse produced at the plate of V-2a. When triggered into operation, V-6b conducts operating the relay in its plate circuit and supplying a contact closure for the purpose of operating a timing channel on a Brush recorder. When triggered the event marking circuit also produces a positive 100 volt pulse at the plate of V-5a. This signal is supplied through 100,000 ohm resistors to neon lamps in instruments recording on 35 millimeter film. The event mark is 1.0 millisecond in length. The operation of this circuit facilitates data analysis since events detected by the Waveform Discriminator are marked on the records.

Performance

The Discriminator Unit has been tested thoroughly both in the laboratory and during thunderstorm activity and has been found to operate satisfactorily. Preliminary tests revealed some difficulty with the timing and gate control circuits but these malfunctions were eliminated by slight changes in bias on these circuits. After adequate warm-up time, all circuits have been found to be stable in their normal states and to function properly upon application of signal.

CHAPTER V

THE HIGH VOLTAGE POWER SUPPLY

The total amplification of photomultiplier tubes is highly dependent on the voltage per stage. This means that even slight changes in overall voltage in the voltage divider will result in rather large changes in amplification. For example, a 1 per cent change in voltage on a ten stage photomultiplier tube will result in a 7 per cent change in output level. For this reason power supplies used with photomultiplier tubes are usually designed such that currents drawn from the bleeder supply by the dynodes will have little effect on the voltage between the dynodes.

Because of the high level light intensities with which the Light Detection Unit is used, the change in gain of the photomultiplier tube is not so critical as it might be for another application. For example, if the photomultiplier were for a scintillation counter in which the integral of the current produced at the anode is of utmost importance, then even slight changes in gain would be prohibitive. Since changes in photomultiplier gain are not of extreme importance in the Light Detection Unit, the High Voltage Power Supply does not have to be the highly regulated type used with scintillation counters.

The schematic diagram of the power supply constructed for use with the Waveform Discriminator System is shown in Figure 5.1. This power supply does not contain a regulator of any type but its perform-

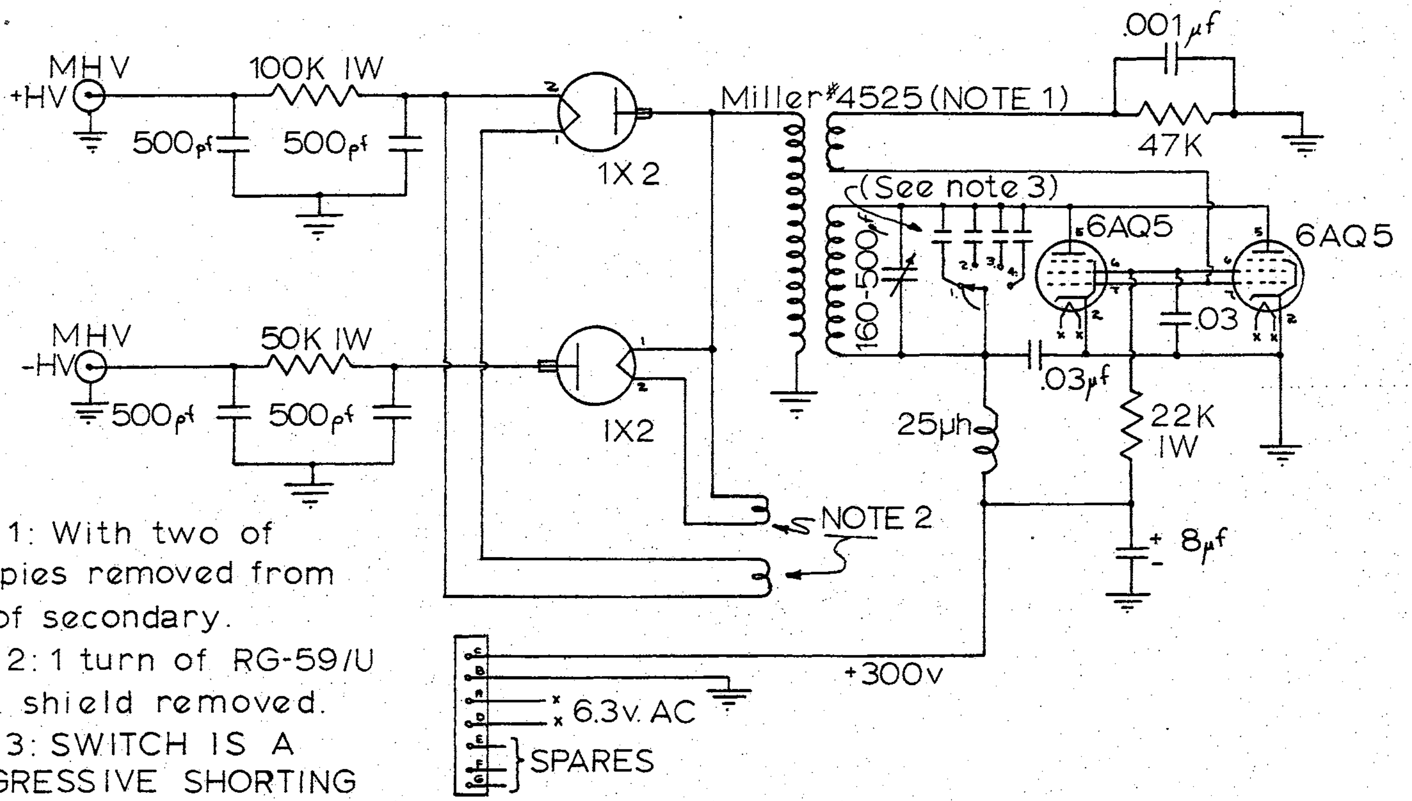

Note 1: With two of five pies removed from top of secondary.

Note 2: 1 turn of RG-59/U with shield removed.

Note 3: SWITCH IS A PROGRESSIVE SHORTING ROTARY TYPE. 1. 200 pf. 2. 50 pf. 3. 50 pf. 4. 50 pf.

HI-VOLTAGE POWER SUPPLY
300-1500 v. at 1 ma.

Figure 5.1. Schematic Diagram of High Voltage Power Supply

ance has been found adequate for satisfactory operation of the light detection unit.

The power supply is an RF type supply which is capable of delivering about 2 to 3 milliamperes at 1000 volts. The two 6AQ5 tubes comprise an RF oscillator. The required positive feedback is produced by the regenerative action of the transformer coupling between the plate and grid circuits of these tubes. The resonant frequency is mainly determined by the value of the inductance of the primary winding of the transformer and the value of the capacity in parallel with it. The frequency is on the order of 300 kilocycles. The output of the resonant circuit is stepped up by the secondary of the transformer and applied to the two 1X2 rectifier tubes. The rectifier outputs are filtered as shown in the diagram. The filtered outputs provide either positive or negative direct current of which only the negative output is used for this application. The voltage output may be varied continuously from 600 volts to 1000 volts by the capacitors in parallel with the transformer primary. The +300 volts is supplied to this unit by the plate voltage supply for the Discriminator Unit.

CHAPTER VI

POWER CONTROL UNIT

The Waveform Discriminator System is a self contained device, separate from all other equipment except through the positive and negative 300 volt power supplies. For economy reasons it is necessary that certain other instruments at the Atmospherics Laboratory obtain power from the same power supplies as those used for the Waveform Discriminator System. Since the possibility exists that either one or the other of the 300 volt supplies may be turned on without the other, and therefore damage components of the Discriminator Unit, it was decided that a simple power control device would be constructed.

The schematic diagram of the Power Control Unit is shown in Figure 6.1. This unit was designed for the purpose of allowing an adequate warm-up time for all tube heaters in the Discriminator Unit before plate voltage can be applied. Also both the positive and negative 300 volt supplies must be operating before power can be applied to the Discriminator Unit. After power is applied and the Waveform Discriminator System is in operation, should one of the power supplies fail, the Power Control Unit discontinues all power including that to the photomultiplier tube.

Power is supplied to the Power Control Unit from the 115 volt, 60 cycle line. The 300 volt supplies receive 60 cycle power from the

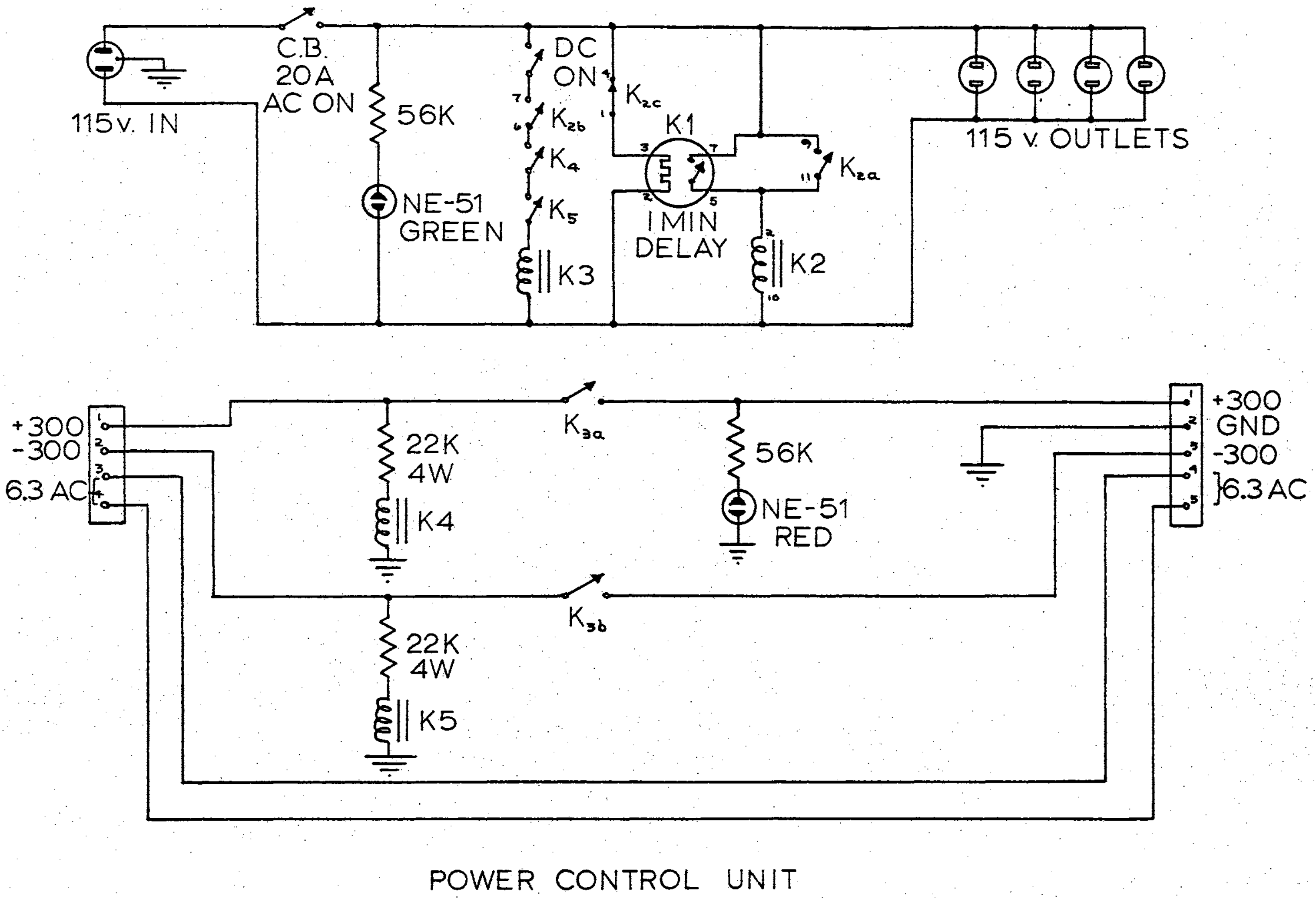

Figure 6.1. Schematic of Power Control Unit

Control Unit when the circuit breaker is closed. When the circuit breaker is closed, the power supplies are turned on and they supply power to the tube heaters immediately. The green light comes on indicating the application of 60 cycle power and power is applied to the thermal time delay. Before the time delay relay closes, the power supplies apply their voltages to the +300 and -300 volt inputs, pulling in relays K-4 and K-5. At this point the D. C. ON switch has no effect since K-2 has not as yet pulled in. When the thermal delay closes it operates K-2 and thereby locks K-2 into operating condition by the closure of K-2a. At that instant, power is discontinued to the time delay heater. Closure of the D. C. ON switch will operate K-3 thereby applying positive and negative 300 volts to the Discriminator Unit. The closure of K-3a also applies power to the red neon light which indicates the presence of plate voltages.

After operating conditions are established, if either 300 volt supply should fail its respective interlocking relay will drop out causing K-3 to drop out and thus remove the other supply from service. Should the 60 cycle power fail, the thermal time delay will require that a 1 minute warm-up period be allowed for the heater before re-application of plate voltage.

This unit has been in operation for quite some time and performance has been entirely satisfactory.

CHAPTER VII

RESULTS, CONCLUSIONS AND RECOMMENDATIONS

In 1960 the Staff of the Atmospherics Research Laboratory at Oklahoma State University initiated a program which was to be a new approach to the study of atmospheric electricity. This new approach was based on the classification of electrical discharges according to their electrical characteristics. To the knowledge of the members of the Atmospherics Staff, this classification technique has not been attempted by other workers in the atmospherics field.

In planning the 1961-1962 program it became obvious to the Atmospherics Staff that an instrument having certain characterisitcs could be very useful in obtaining data for the classification study. Such an instrument would be capable of obtaining the sferic waveform of a lightning discharge, occuring within visual range of the laboratory, whose luminous characteristics could be photographed with a moving film camera. Also the waveforms should be recorded in such a manner that time correlation with photographs of the events would be certain, and such that waveforms from all other lightning discharges would be eliminated. The Waveform Discriminator System is an instrument designed to have these essential characteristics and constructed to perform these functions.

When the planning of the Waveform Discriminator System reached the stage where specifications were clear, the design of the system was initiated on a "unit" basis. Each unit of the system was designed and constructed such that its integration into the system could be made without effort. The various units of the system were tested individually to correct wiring errors and circuit malfunctions. When construction and testing of all units was complete the system was assembled for an operational test.

The Waveform Discriminator System was assembled and ready for an operational test in June of 1961 but this was too late in the thunderstorm season for thorough tests to be made. The few storms occurring after June in 1961 did present an oppprtunity for making prelinimary tests. These tests revealed the normal amount of circuit malfunctions and wiring errors together with some design errors which are inherent in this type of system. Perhaps the greatest difficulty was experienced with the adjustment of the delay line which follows the waveform amplifier in the Q-3 section. The adjustment of this delay is quite critical and because of the rise-time characteristics of the luminosity of lightning it is quite difficult to make. Some difficulty with this delay is still being experienced.

The storm season of 1962 has presented an opportunity to test the Waveform Discriminator System more thoroughly and the results of these tests have been satisfactory. The Waveform Discriminator System is apparently capable of performing the function for which it was designed and constructed. The data obtained with the aid of the Waveform Discriminator System should be easy to analyze compared to that taken by other methods and the results should yield information concerning the studies being conducted.

Figures 7.1, 7.2 and, 7.3 are samples of the data obtained with the aid of the Waveform Discriminator System. It may be seen from these film samples that the recorded waveform can be correlated directly with the photograph of the lightning discharge from which it was obtained. The lightning photograph shows directly the type of discharge, and the waveform may be analyzed by the Fourier method to find the frequency content. This type of study together with that of the electric field changes associated with thunderstorms should determine the value of proceeding with the classification method.

It is suggested that continued use of the Waveform Discriminator System will be valuable to the study of atmospheric electricity. Already, other applications have been found for this instrument, in addition to that for which it was designed and built.

Suggestions for improvement of the system include the design and construction of a special waveform recording section so that the use of the Q-3 equipment will not be necessary. Also the instrument could benefit greatly from an improved delay section. Although it would not be necessary to have a continuously variable delay section, one which can be varied in smaller steps would be better than the present arrangement. A more detailed investigation of the luminous characteristics of lightning would be of much help in designing another delay line. As with all devices, extended use of the Waveform Discriminator System will yield other means of improvement.

Photograph of Cloud-to-Cloud Discharge

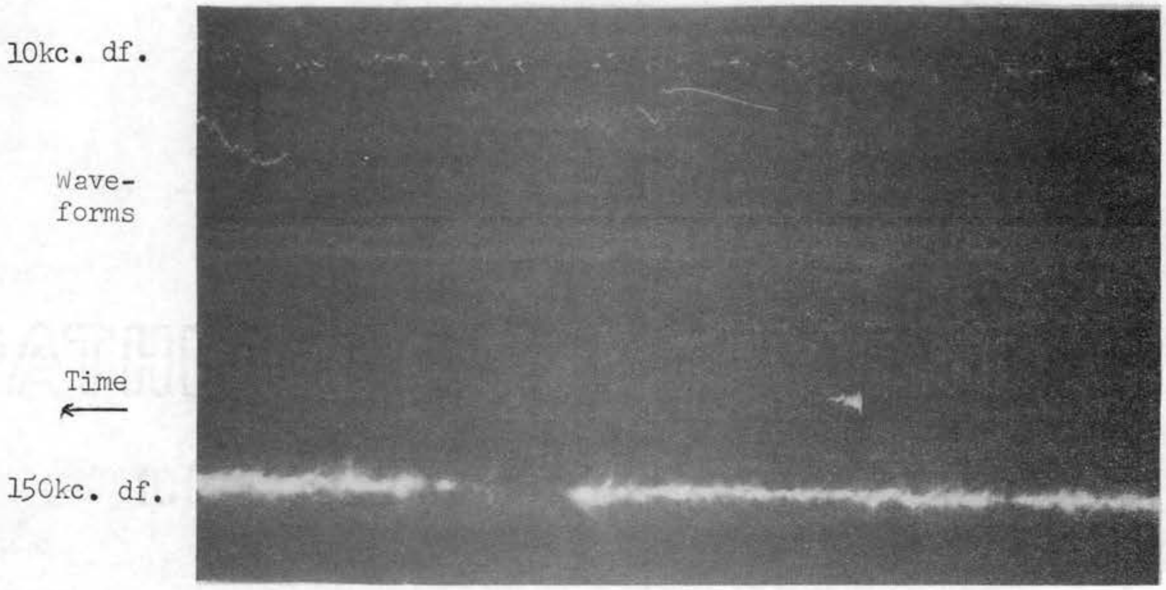

Q-3 And HFDF Record

Figure 7.1. Sample of Data From The Storm of May 25, 1962

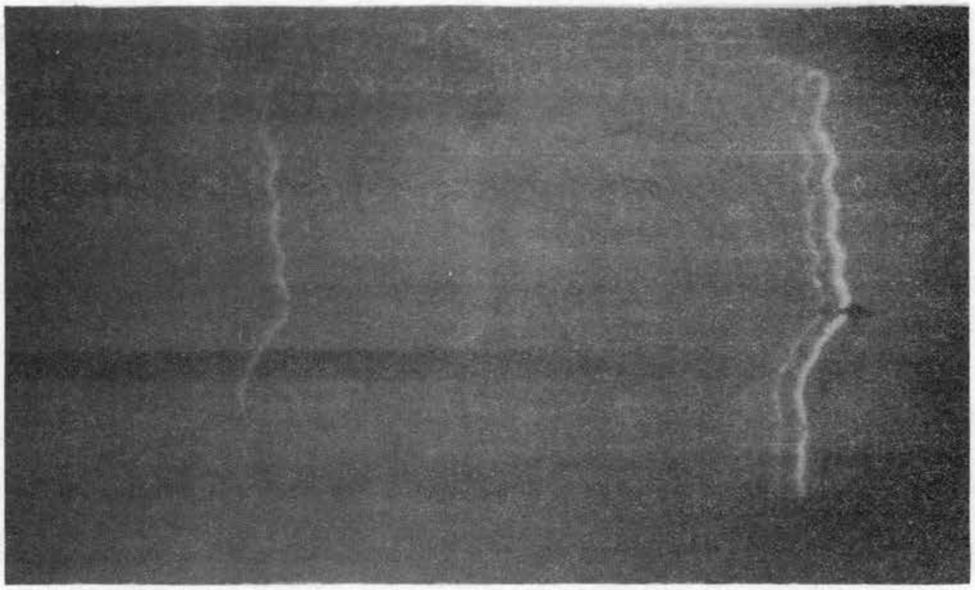

Photograph of Cloud-to-Ground Discharge

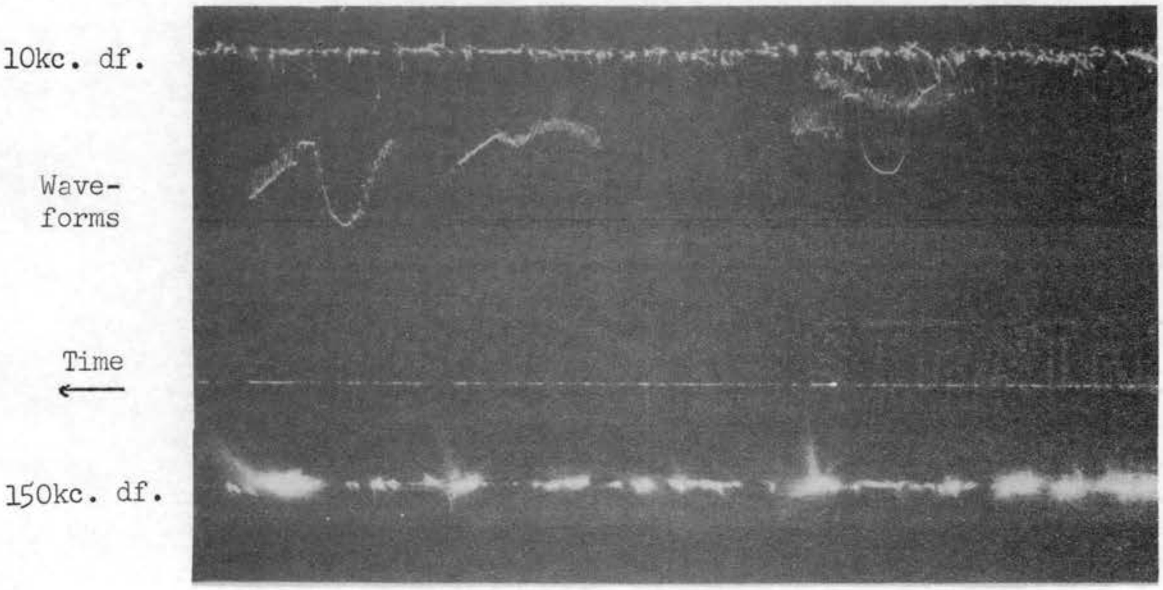

Q-3 And [illegible]FDF Record

Figure 7.2. Sample of Data From The Storm of May 25, 1962

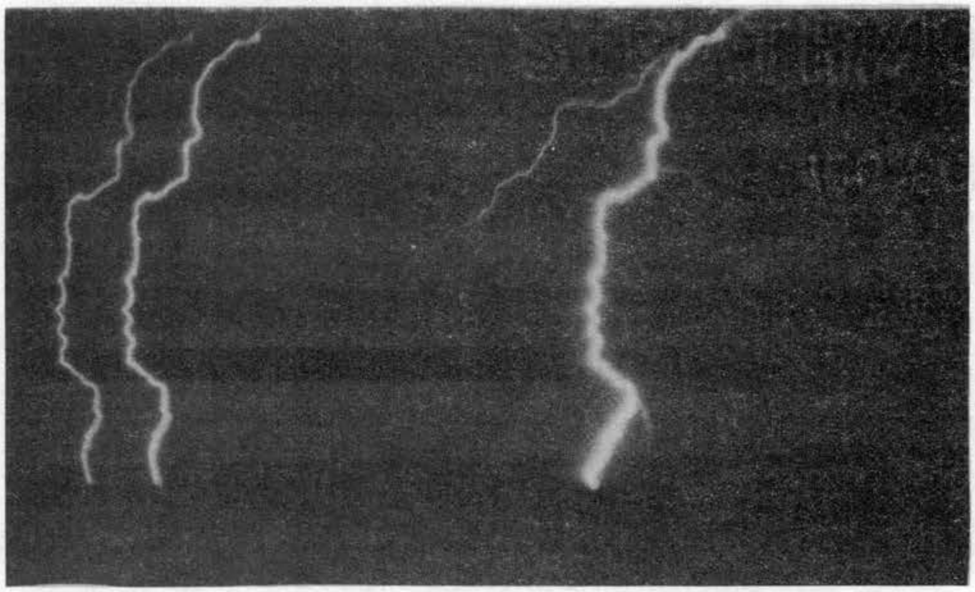

Photograph of Cloud-to-Ground Discharge

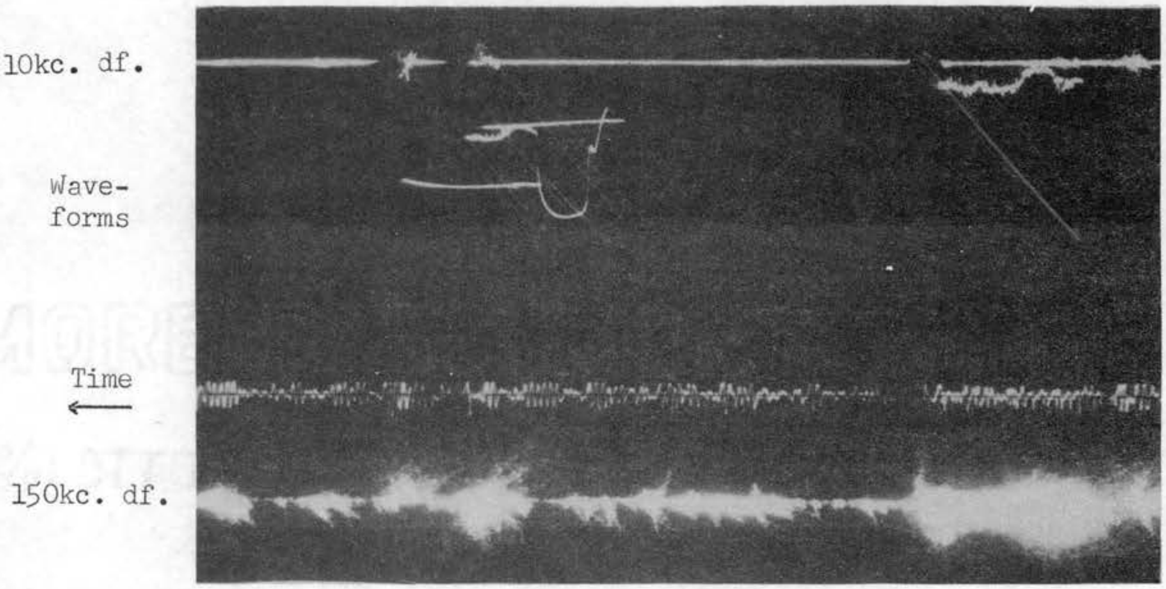

Q-3 And HFDF Record

Figure 7.3. Sample of Data From The Storm of June 9, 1962

SELECTED BIBLIOGRAPHY

Birks, J. B., Scintillation Counters, London: Pergamon Press Ltd., 1953, pp. 21-39.

Chance, Britton, et. al., Waveforms, M.I.T. Rad. Lab. Series, New York, McGraw-Hill, 1949, pp. 166-171.

DuMont Laboratories, DuMont Multiplier Photo Tubes, Clifton, New Jersey, 1960.

Leob, L. B., Fundamental Processes of Electrical Discharge in Gases, New York, Wiley, 1939, pp. 540-543.

Lewis, I. A. D., and F. H. Wells, Millmicrosecond Pulse Techniques, London: Pergamon Press, 1959.

Linden, B. R., New Photomultipliers and Operating Data, Vol. 12, No. 3, March, 1954, pp. 20-23.

Meek, J. M., and J. D. Craggs, Electrical Breakdown of Gases, Oxford: Clarendon Press, 1953, pp. 223-250.

Millman, Jacob, and Herbert Taub, Pulse and Digital Circuits, New York: McGraw-Hill, 1956.

Reich, H. J., Functional Circuits and Oscillators, Princeton: Van Nostrand, 1961.

Smith, L. G., Recent Advances in Atmospheric Electricity, New York: Pergamon Press, 1958, pp. 543-556.

Sommer, A., Photoelectric Tubes, London, 1951.

Thomson, J., and E. B. Callick, Electron Physics and Technology, London: The English Universities Press, 1959.

VITA

John C. Hamilton

Candidate for the Degree of

Master of Science

Thesis: AN INSTRUMENT FOR DETECTING SFERICS FROM VISIBLE LIGHTNING DISCHARGES

Major Field: Electrical Engineering

Biographical:

Personal Data: Born at Okemah, Oklahoma, March 18, 1934, the son of Roy W. and Nancy Hamilton.

Education: Attended grade school at Webbers Falls, Oklahoma; was graduated from Webbers Falls High School in 1952; attended Connors State Agricultural College at Warner, Oklahoma from 1952 to 1954; received the Bachelor of Science degree with a major in Electrical Engineering from Oklahoma State University in January, 1957; completed the requirements for the Master of Science degree in August, 1962.

Professional Experience: Employed as a Staff Assistant by Sandia Corporation, Albuquerque, New Mexico, in the Summer of 1956; employed as an electronics research engineer by Sandia Corporation from January, 1957, to August, 1960; employed as a research engineer in the Electrical Engineering Department at Oklahoma State University from August, 1960, to present.