2006-04-18

Design of a High Data Rate Audio Band OFDM Modem

Abhijit C. Navalekar
Worcester Polytechnic Institute

Design of a High Data Rate Audio Band OFDM Modem

A thesis
Submitted to the faculty of the

Worcester Polytechnic Institute

In partial fulfillment of the requirements for the
Degree of Master of Science
in
Electrical and Computer Engineering

By

Abhijit .C. Navalekar

March, 2006

Approved by:

Dr. William R. Michalson, Thesis Advisor

Dr. Jim Matthews, Committee Member

Dr. Peder Pedersen, Committee Member

Dr. Fred Looft, Head Of Department

ABSTRACT

Land mobile radio technology (LMR) has existed since the early 1920's. The most visible manifestation of this technology is the handheld VHF/UHF radios also referred to as 'walkie-talkie'. These handheld devices are one of the most ubiquitous forms of radio communication systems. Most of them are designed for transmitting analog voice signals. Due to an increase in the amount of digitized analog signals over the past few years complemented by a need for transmitting pure digital data, there has been a desire to transmit digital data. There are methods which allow the analog radios to transmit digital data without any modifications; however the data rate achievable using these methods is very low. In contrast, the digital variants of these hand-held radios are capable of transmitting digital data at comparatively higher data rates. However they are expensive and require major infrastructure overhauls.

In this thesis, a prototype modem is developed, which interfaces with an analog radio without a requirement for any modifications. Furthermore, the data rates achievable are comparable with those achieved using digital radios. The modem uses Orthogonal Frequency Division Multiplexing (OFDM) technique to generate an audio band signal which is fed to the radio. Thus the digital data is morphed into an audio band analog signal eliminating any need for modifications to the radio. The OFDM technique used to generate the audio band signal from data bits ensures maximum bandwidth efficiency.

The developed modem is capable of communicating over Ethernet connection. It uses a RJ 45 interface to connect to a data source. It is also capable of supporting a host of radio interfaces. The modem also implements its own version of medium access layer (MAC) and physical (PHY) layer protocols. There are four versions of modems designed. They differ in terms of the data rates they can support. Currently, version 1 which supports data rate of 12kbps has been implemented.

ACKNOWLEDGEMENTS

First and foremost, I would like to thank my advisor, Professor William R. Michalson for his patience, support and guidance without which this project would not be possible. He has been a constant source of motivation and knowledge for me. I would like to sincerely thank Dr. Jim Matthews and Professor Pedersen for being part of my committee. Furthermore, I would also like to thank Professor Brain King who was my academic advisor for my masters program.

I would like thank my former lab colleague Gaith Hammouri who worked with me on one of the components of the modem. I would also like to acknowledge the contributions of Vitali Gyzer and Jitish Kolanjery in writing the applications to test the working of the modem. A special thanks to my colleague Hemish Parikh for his company and guidance.

Last but not least, I would like to thank my mother, father and sister for their unwavering love, support and confidence in me.

TABLE OF CONTENTS

LIST OF FIGURES

LIST OF TABLES

1. INTRODUCTION

Land mobile radios (LMR) have been traditionally used to transmit analog voice signals. Most of the early systems developed, used amplitude modulation (AM) or frequency modulation (FM) to transmit the voice signals [1]. One of the first applications of analog radio was for law enforcement. Use of Frequency Modulation (FM) for analog radios started in early 1940's. These FM/AM systems were only capable of transmitting analog voice data. They were later succeeded by systems like facsimile, radio teletype which were capable of transmitting data. Data transmission over analog radios was accomplished using select audio tones to transmit textual data. Thus, these systems were capable of transmitting only by means of encoding them into analog signals.

One of the earliest versions of digital radio was packet radio. Packet radio is a particular digital mode of amateur radio communications and has been around since the mid-1960. It is similar to a telephone modem except that the modem was replaced by a 'magic' box called a terminal node controller (TNC) [2]; the telephone is replaced by an amateur radio transceiver and the phone system is replaced by the radio waves. Packet radio takes any data stream sent from a computer and sends that via radio to another amateur radio station similarly equipped. The data rates supported vary according to the channel used and type of radio. For data rates of 1200/2400 bps UHF/VHF packet, commonly available narrowband FM voice radios are used. For HF packet, 300 bps data is used over single side band (SSB) modulation. These packet radios implemented a protocol called AX.25 to accomplish communication. Current versions of packet radio support a variety of standard protocols like Transmission Control Protocol/Internet protocol (TCP/IP) [26] at the same data rate. For higher data rates (> 9600 bps), special radio sets or modified FM radios are required. The modified FM radios have a greater bandwidth available for the input modulating signal. This can be achieved by removing the audio band pass filter at the input which would restrict the modulating signal frequencies between 300 Hz to 3.3 KHz. One of standard developed for transmitting digital data is P25 [3]. P25 radios are modified FM radios and also require P25 standard compatible infrastructure for communications. This means that analog radio and P25 radios are not compatible with

each other. In addition to the cost factor involved, changing to a P25 compatible radio infrastructure renders the current analog radios useless.

In this thesis, a prototype modem is developed which interfaces with an analog radio and is capable of supporting higher data rates without any modifications to the radio or the supporting infrastructure. Achieving higher data rates is possible due to the use of Orthogonal Frequency Division Modulation (OFDM). OFDM technology is described in Chapter 2. The DREAMS application [7] described in Section 1.3 is used as a test bench for testing the modems. Sections 1.1.1, 1.1.2 and 1.1.3 describe the available FM radios. The motivation for design of modem is given in Section 1.2.

1.1. Radio Communication

Wireless communications has many advantages over wired communications in terms of cost and range. In addition, the pervasive nature of wireless links makes it an ideal medium for use in high density and long range communication. The available radio spectrum for wireless communications [4] is divided into different bands depending upon a frequency range of operation and/or types of services as shown in Table 1-1 .

Frequency band	Frequency Range	Typical Applications
ELF (Extremely Low Frequency)	3- 30 Hz	Communications with submarines.
SLF (Super Low Frequency)	30- 300 Hz	Communications with submarines.
ULF(Ultra Low Frequency)	300 Hz- 3 KHz	Communications in mines.
VLF (Very Low Frequency)	3 KHz- 30 KHz	Radio Navigation beacons.
LF (Low Frequency)	30 KHz- 300 KHz	Navigation, weather systems.
MF (Medium Frequency)	300 KHz- 3 MHz	AM Broadcasts.
HF (High Frequency)	3 MHz- 30 MHz	Medium and long range communication.
VHF (Very High Frequency)	30 MHz- 300 MHz	FM broadcast. Land Mobile Radio
UHF (Ultra High Frequency)	300 MHz- 3 GHz	Television, Mobile phones, WLANS. Land Mobile Radio
SHF (Super High Frequency)	3 GHz- 30 GHz	Radar, WLANS.

EHF (Extremely High Frequency)	30 GHz- 300 GHz	Radio astronomy.

Table 1-1: Frequency Bands.

The UHF and VHF bands are commonly used frequency bands for television. Modern cell phones technologies like GSM, CDMA also transmit and receive in the UHF band. In addition to these applications UHF and VHF bands have been traditionally used in land mobile radio (LMR) applications like public safety organizations, first responders and amateur radio. These radio applications typically use Amplitude Modulation (AM) and Frequency modulation (FM) modulation for transmission. AM broadcasts are more susceptible to noise in the channel as compared to FM which is a constant envelope modulation. Most of the public radio services currently in service use FM based systems.

1.1.1. Analog Radio

The half duplex radios used in FM communications can be categorized into analog and digital radios. Analog radio represents the conventional radio systems in which continuous voice signals are used to frequency modulate the carrier frequency. In the case of digital radios, a voice signal is mapped into bits depending upon the data modulation used. The block diagram for an analog radio is given in Figure 1-1. As seen in Figure 1-1, an analog FM radio contains an audio band pass filter which restricts the frequencies of the modulating signal, typically between 300 Hz to 3300 Hz. This signal is then fed to a FM modulator. Chapter 2 introduces the basics of FM modulation while the building blocks of an FM modulator are given in [1]. Thus, in an analog FM radio a band pass voice signal frequency modulates the carrier frequency.

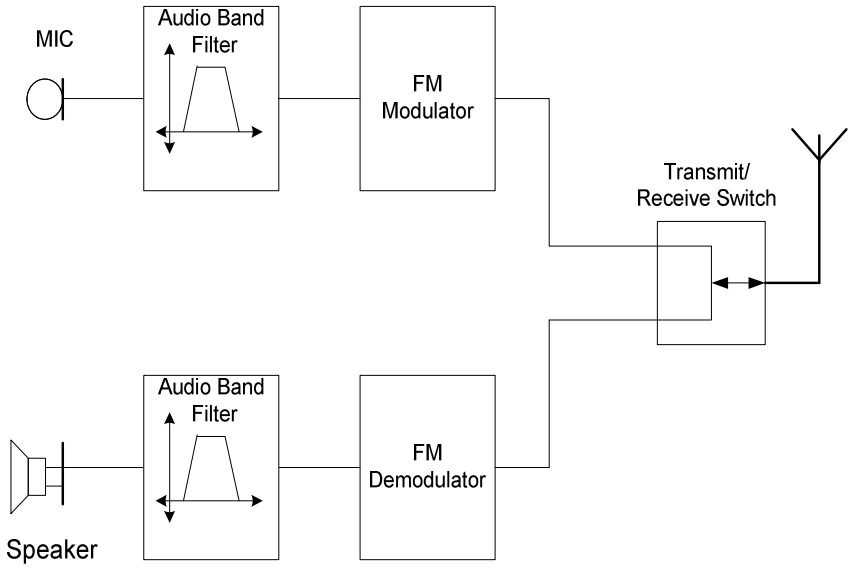

Figure 1-1: Analog (Half Duplex) FM radio.

1.1.2. Digital Radio

As opposed to analog radio, a digital FM radio transmits digitized voice as seen in Figure 1-2. The voice is first digitized using an A/D (Analog-to-Digital) converter. This digitized voice is then passed through a vocoder. The vocoder is a type of speech coder/decoder which only transmits certain characteristics that represent speech. These features can be used to reproduce a synthetic equivalent of the input audio. Examples of popular vocoders are Improved Multi-band Excitation (IMBE), Code Excited Linear Prediction (CELP) and Advanced Multi-band Excitation (AMBE) [5]. Channel coding/decoding ensures that the voice data is received correctly by using error detection and correction codes. In data modulation, the data bits are mapped into channel symbols. A detailed description of these modules is given in Chapter 3. Such radios are also used to transmit digital data. An example of a digital radio is the P25 radio. P25 radios support data rates of 9600 bps. A major drawback of this technology is the requirement for upgrading the existing infrastructure.

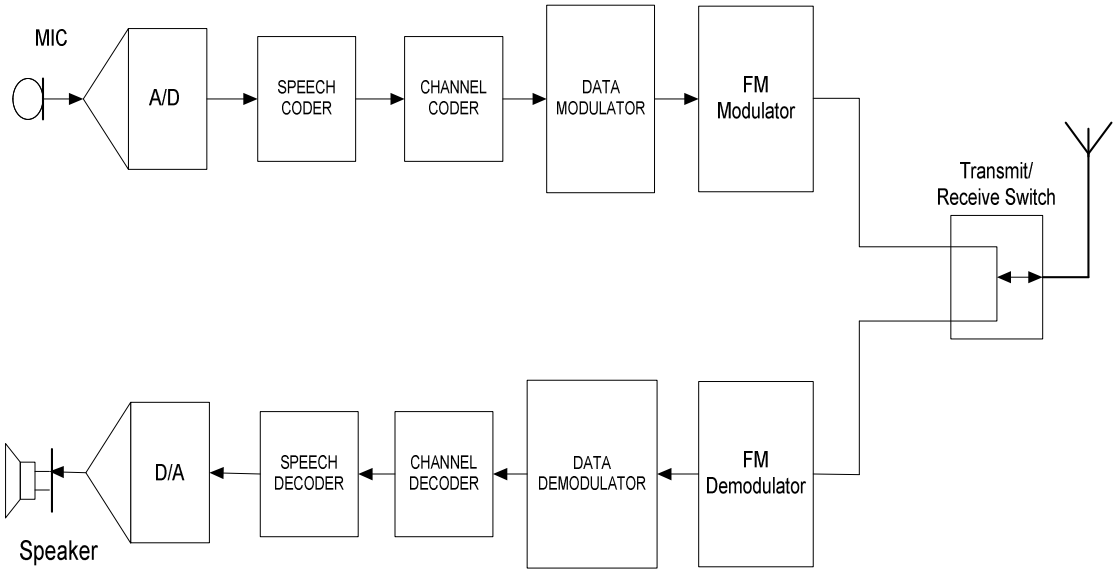

Figure 1-2: Digital FM (Half Duplex) radio.

1.1.3. Hybrid Radio

Some radios can function both in analog and digital modes. An example of such a radio is the Motorola XTS 5000 [6]. This radio can function as a conventional analog radio in which voice signals directly frequency modulates the carrier. It is an example of a Software Defined Radio (SDR). In addition it can also function in digital mode in which digitized voice or data bits are used to modulate the carrier. The capability of being able to transmit data in addition to voice is a desirable feature; however the cost of such hybrid radios is an inhibiting factor.

1.1.4. OFDM Modem

Using a new approach, any conventional analog radio can be used to transmit digital data. Digital data or digitized voice is used to generate an Orthogonal Frequency Division Multiplexing (OFDM) modulated analog signal. The bandwidth of such a signal can be manipulated such that it appears in the required audio band. Use of OFDM also ensures that the unequal frequency response of different analog radios can be compensated for. The details of OFDM modulation and channel equalization techniques are given in

Chapter 2. A system using OFDM is shown in Figure 1-3. Such a system enables a low cost analog FM radio to transmit digitized voice or digital packets without any modifications to the existing circuitry.

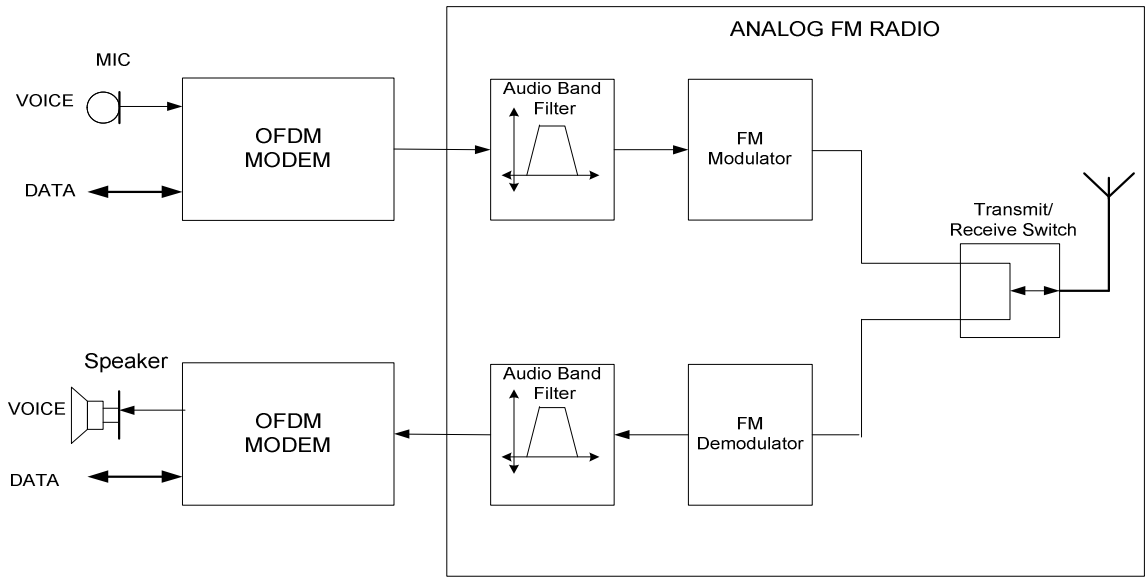

Figure 1-3: OFDM Modem with Analog FM Radio.

1.2. Objectives of thesis

There are two main objectives for the thesis. They are:

1] To design and build a prototype OFDM modem which is capable of transmitting and receiving data over a UHF/VHF radio link using a standard Ethernet connection. The development process involves design of physical layer (PHY) parameters like choice of modulation technique, format of data packets transmitted over the radio link and many others. A detailed discussion for physical layer technologies used is given in Chapter 2 and Chapter 9. In addition to software development, the thesis also involves design of hardware for interfacing a radio with the modem. The current version of the OFDM modem does not support voice transmission. Voice capability will be added in future versions of the modem.

2] To develop protocols between modems to facilitate transfer of data between DREAMS systems. The DREAMS application [7] is introduced in Section 1.3. The medium access control layer (MAC) protocols developed are documented in Chapter 4 and 5.

1.3. DREAMS System

The acronym DREAMS stands for Disaster Remedy and Emergency Medical Services and is a telemedicine application developed by Texas A&M University and University of Texas at Huston [7]. It is an advanced telemedicine project designed to speed diagnosis and treatment of critically injured patients. The project includes designing remote diagnosis capabilities between a paramedic and physician. The software developed for the system (which will be referred to as the DREAMS software in this thesis) is capable of both monitoring and communicating critical and non-critical patient information. Figure 1-4 and Figure 1-5 show the GUI for the paramedic and physician stations running the DREAMS software. Both the paramedic station and the physician station are portable terminals. The paramedic station is equipped with patient health monitoring hardware like ECG machines, webcam and a defilbulator. In addition to equipment for health monitoring, a number of communication devices are also connected. The DREAMS system is capable of establishing a communication link between the paramedic and physician station using a variety of wireless and wired technologies like cell phones, satellite radio and Ethernet. The OFDM modem extends these communication capabilities over VHF/UHF radio links. The paramedic and physician systems work in a 'client-server' based architecture. The paramedic station houses the servers for all the services it provides. The clients are located at the physician terminal. The communication between the paramedic and physician stations is implemented using the User Datagram Protocol/ Internet Protocol (UDP/IP) protocol [8]. Each service is identified by the pair of source and destination port numbers used in UDP protocol. Table 1-2 lists some of the important services and their respective port numbers. The paramedic station is discussed in Section 1.3.1 and the physician station is discussed in Section 1.3.2.

Port Identifier	Type of information	Port Number
Dreams.port.VitalsPortRange	ECG waveform	4100
Dreams.port.NavServerPort	GPS co-ordinates	4200
Dreams.port.AudioAllPort	Voice signals	4503
Dreams.port.DatabaseServerPort / dreams.port.DatabaseClient Port	Database contents	4800 / 4801
Dreams.port.VideoServerVideoPort / dreams.port.VideoClientVideoPort	Video camera module	4713 / 4715
Dreams.port.TextMessagingServerPort/ dreams.port.TextMessagingClientPort	Text messaging	5200 / 5201
Dreams.port.FileTransferPort/ dreams.port.FileTransferClientPort	File transfer	5300 / 5301

Table 1-2: Services and port numbers.

Figure 1-4:DREAMS: Paramedic station.

1.3.1. Paramedic Station

This station is generally housed on the mobile end, for example in an ambulance. The software on the paramedic station interfaces with a number of medical instruments like an ECG machine. One of the functions of the software on the paramedic station is to collect the information from the instruments and relay it to the physician station using one or more of the available communication media. In addition to critical medical information, the paramedic station is also capable of transmitting non-critical information like medical records, patient information, live video and audio streams, video stills and GPS navigation data. As mentioned in Section 1.3, the paramedic station implements the servers for the services provided. The GUI for paramedic station is shown in Figure 1-4.

1.3.2. Physician Station

This station can be located in a hospital or a base camp. The GUI for the physician station is shown in Figure 1-5. The main task of the physician station is to display the information transmitted by the paramedic station.

Figure 1-5: DREAMS: Physician Station.

The physician station also provides a mechanism for a physician to interact with paramedics using the voice and text messaging capabilities of the DREAMS system.

1.4. Layout of thesis

The first four chapters describe development and design process for a prototype modem. The second chapter introduces basics of FM transmission and OFDM technology. There exist a number of ways in which a modem can be built. In the third chapter we describe the modulator and demodulator structures implemented which use structures well known in the field digital communications. Thus Chapters 2 and 3 deal with the physical layer transmission technologies used in the modem. In Chapter 4, the Ethernet interface is discussed from the perspective of the standard networking Open Systems Interconnection (OSI) model. The model described in this chapter serves as a platform for the software implementation of the modem. Chapters 5, 6 and 7 deal exclusively with the design of the Medium Access Layer (MAC). The design process follows well established norms and has been modified as per the requirements of the application targeted for demonstrating the modem.. In Chapter 8, theoretical limits on the performance of the modem under different conditions have been documented. Improvements and future work is discussed in Chapter 9.

2. INTRODUCTION TO FM AND OFDM

In this chapter we introduce the concepts of frequency modulation (FM), Narrow Band Frequency Modulation (NBFM) and Orthogonal Frequency Division Multiplexing (OFDM). Section 1.3 explores the relationship between the bandwidth of the transmitted signals and the maximum frequency of the modulation signal for a FM signal. The basic concept of OFDM transmission is explained in Section 2.2. Sections 2.2.1, 2.2.2, 2.2.3, and 2.2.4 deal with the synchronization and equalization issues associated with OFDM.

2.1. Frequency Modulation

In frequency modulation, the frequency of the carrier is modulated according to the strength of the modulating signal [1]. Furthermore, the amplitude of the signals remains constant while the frequency shifts back and forth centered about the center of carrier frequency. The variation in carrier frequency is a function of the amplitude of the modulating signal alone. The frequency of the modulating signal determines the rate at which the frequency changes take place but exerts no influence on the extent of the changes. The mathematical representation of an FM signal is given by Equation 2-1.

$$s(t) = A_c \cos(2\pi f_c t + 2k_c \int_0^t m(\tau) d\tau$$ **Equation 2-1**

where

$M(t)$	=	modulating signal
A_c	=	carrier amplitude
f_c	=	carrier frequency

if the modulating signal is a sinusoid, given by

$$m(t) = A_m \cos(2\pi f_m t)$$ **Equation 2-2**

where

f_m = modulating signal frequency

A_m = modulating signal amplitude

Then Equation 2-1 reduces to

Equation 2-3

$$s(t) = A_c \cos(2\pi f_c t + \frac{k_f A_m}{f_m} \sin(2\pi f_m t))$$
$$= A_c \cos(2\pi f_c t + \beta \sin(2\pi f_m t))$$

where

$k_f A_m$ (Δ_f) = modulating signal frequency

β (Δ_f / f_m) = modulating signal amplitude

Some of the advantages of using frequency modulation are:

1] Constant signal strength.

2] Higher immunity to noise since the modulating signal is recovered from the deviation of frequency and not the absolute frequency

Some of the disadvantages of frequency modulation will be its sensitivity to phase distortion and its lower coverage area as compared to amplitude modulation.

2.1.1. Bandwidth Calculation

The frequency bandwidth occupied by the FM signal [9] depends upon two factors:

1) The intensity of the applied modulating signal.
2) The frequency of this modulating signal.

Consider an FM system where the modulating signal is a sinusoid of frequency f_m. Upon the application of the modulating wave the carrier frequency is shifted back and forth from a maximum position above the carrier frequency to a minimum position below. The process generates sidebands at frequencies which are multiples of differences and summations between the modulating signal and the carrier frequency. Theoretically there is an infinite number of sidebands stretching on both sides of the center frequency. However, practically, only a finite number of sidebands have sufficient power to be of

value towards the reception of the signal. Beyond this, additional sidebands exist but they carry little or no power and are considered to be unwanted emissions. The intensity of the modulating signal also affects the distribution of power in the sidebands. The power is actually drained from the carrier into the sidebands. The stronger the modulating signal, the greater is the attenuation at the carrier frequency. It is also possible that the strength of the sidebands is actually greater than that of the carrier frequency. However the total power of the signal remains constant which is a characteristic of frequency modulation.

As the strength of modulating signal increases the number of significant sidebands increases as the sidebands that were considered negligible are now accentuated. The energy spreads out, creating more sidebands of significant power and thereby increasing the bandwidth of the generated FM signal. It is important to note that the intensity of the modulating signal only affects the power in the sidebands, not the location of sidebands. This phenomenon is illustrated in the Figure 2-1.

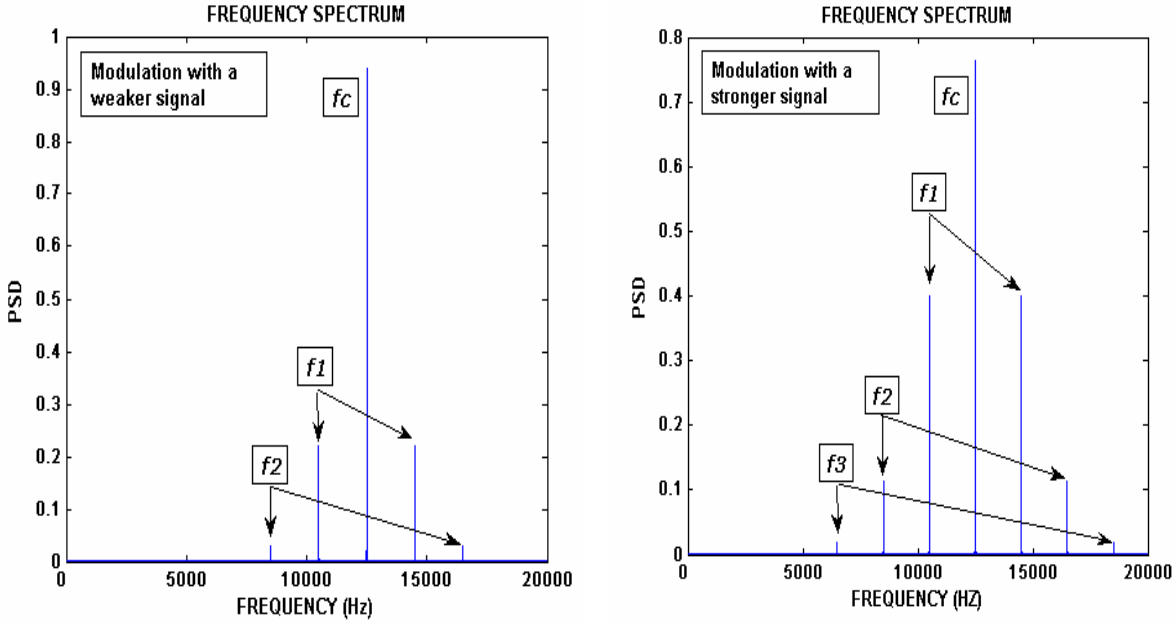

(a) **(b)**

Figure 2-1: Frequency spectrum of FM signal, a) for modulating signal with lower amplitude b) for modulating signal with higher amplitude.

From Figure 2-1 it can be observed that when the modulating signal is weaker, the resulting FM signal has two significant sideband pairs. If the modulating signal is of greater strength, then the resulting FM signal has three significant sideband pairs. Thus it can be concluded that increasing the strength of the modulating signal results in an increase in the bandwidth of the FM signal transmitted.

The frequency of the modulating signal dictates the locations for the sidebands. Whenever sidebands are formed they are placed at a distance equal to the frequency of the modulating signal. For example if the modulating signal is of frequency f_m Hz then the sidebands are created at frequencies given by Equation 2-4.

$$f_i = f_c \pm f_m \cdot n \text{ , where n=1, 2….k}$$ **Equation 2-4**

where,

f_i	=	Frequency of sideband
f_m	=	Maximum modulating frequency
f_c	=	carrier frequency

The spacing of the sidebands also influences the bandwidth calculation for the FM signal as illustrated in Figure 2-2.

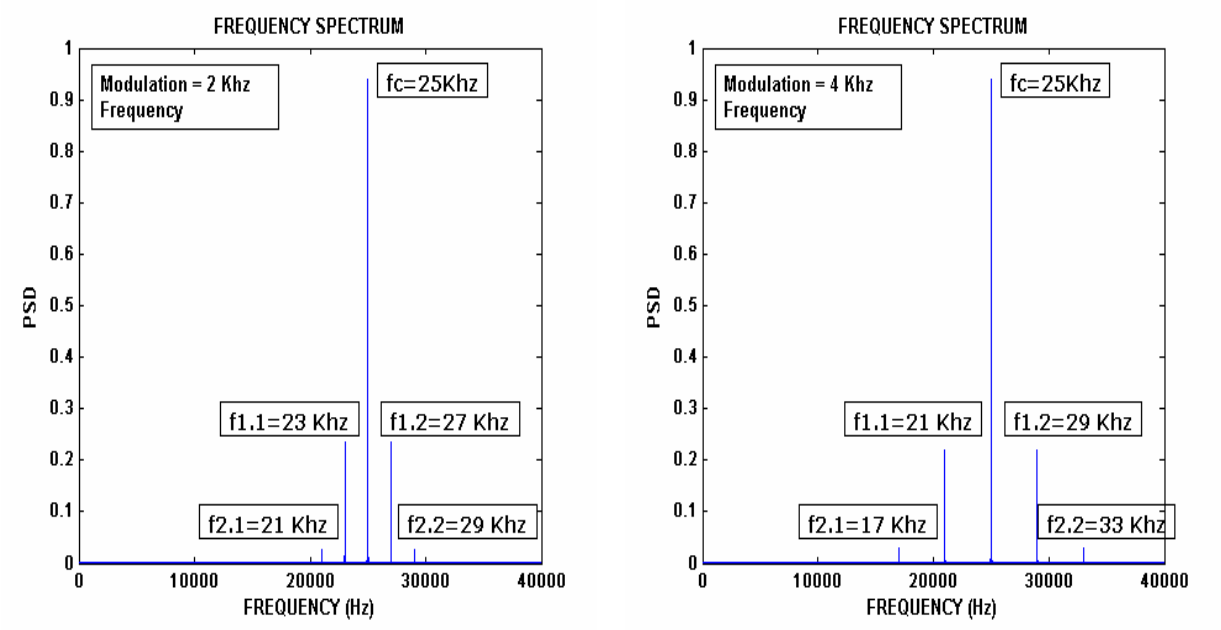

Figure 2-2: Frequency spectrum of FM signal for, a) modulation signal frequency of 2 KHz b) modulation signal frequency of 4 KHz.

From Figure 2-2 it can be observed that when the frequency of the modulating signal is 2 KHz, the first pair of sidebands is positioned at frequencies 23 KHz and 27 KHz which is +/- 2 KHz above the carrier frequency respectively. As the modulating signal frequency increases to 4 KHz the sidebands are separated by 4 KHz, with the first pair of sidebands located at the frequencies of 21 KHz and 29 KHz. Thus although the two FM signals have the same number of significant sidebands the bandwidth occupied by the FM signal modulated by 4 KHz is twice of that occupied by the FM signal modulated by 2 KHz.

Thus the two factors viz. the intensity of the applied modulating signal and the frequency of the modulating signal work in tandem to determine the bandwidth occupied by the FM signal. The term modulation index, β relates the bandwidth of the FM signal with the strength and frequency of the modulating signal [1]. It is defined by Equation 2-5.

Equation 2-5

$$\beta = \frac{\Delta_f}{f_m}$$

where,

Δ_f	=	Deviation (Hz)
f_m	=	Maximum modulating frequency

The higher the value of modulation index, β, the greater is the number of sidebands. The approximate bandwidth of the FM signal with respect to the modulation index can be derived using Bessel's functions and is given in [1]. From the above definition of modulation index, it is observed that if the frequency of the modulating signal is kept constant then the bandwidth will depend directly upon the strength of the signal. Also, if the strength is kept constant then the lower frequencies generate more sidebands. The Figure 2-3 shows the effects of varying the modulation index on the bandwidth of FM signal.

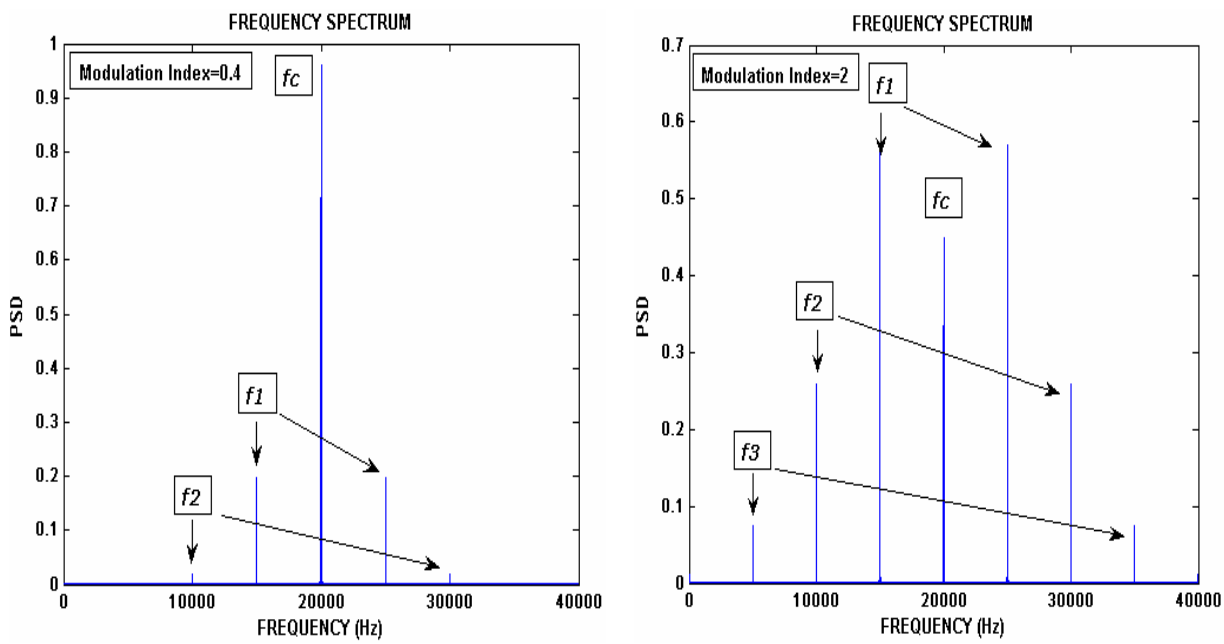

Figure 2-3: Frequency spectrum of FM signal.

From Figure 2-3 it is observed that when the modulation index is 0.4 the number of significant sidebands is 2 and the total bandwidth occupied by the FM signal will be approximately 4*fm . In case of modulation index 2, the number of significant sidebands is 8 and the total bandwidth occupied is approximately 8*fm.

2.1.2. Transmission Bandwidth of FM signals

As discussed in Section 2.1.1 a FM signal contains infinite number of sidebands resulting in infinite bandwidth requirement. The strength of the sidebands decreases as we move away from the carrier frequency. Generally if the amplitude of a sideband is equal or less than 1 % of the highest spectral component then no noticeable distortion is caused by band limiting the FM transmission to that sideband frequency. The transmission bandwidth of a FM signal is the separation between the two frequencies beyond which none of the sideband frequencies is greater than 1 % of the carrier signal obtained when the modulation is removed.

In practice, Carson's rule is used to approximate the bandwidth of the generated FM signal [10]. Carson's rule predicts the bandwidth occupied by the significant sidebands of a FM signal based on the maximum modulation frequency and the corresponding modulation index. The equation is given by:

$$BW = 2fm(1+\beta)$$ **Equation 2-6**

where

BW	=	Bandwidth of FM signal
f_m	=	Maximum modulating frequency
β	=	Modulation index

2.1.3. FM Broadcast Systems

There are two types of FM broadcast systems viz, Narrow Band Frequency Modulation (NBFM) and Wide Band Frequency Modulation (WBFM) [9]. They differ in terms of the maximum permissible deviation of the carrier frequency which in turn dictates the bandwidth of the transmitted signal. The maximum permissible deviation for NBFM broadcasts is +/- 2.5 KHz with an adjacent channel spacing of 15, 20 or 25 KHz. The maximum permissible deviation for WBFM broadcasts is +/- 75 KHz and spacing

between adjacent channels is about 200 KHz. NBFM transmissions generally limit the maximum modulating frequency to about 4 KHz which translates into a modulation index of 0.625. As compared to NBFM, WBFM has maximum modulating frequency set to 15 KHz. WBFM is used in high fidelity FM broadcasts while NBFM channels are generally used in public safety systems and by law enforcement agencies.

2.2. Orthogonal Frequency Division Multiplexing (OFDM)

The OFDM technique is used for achieving high data rates and combating multipath fading in wireless channels [11]. OFDM can be interpreted as a hybrid of multi-carrier modulation (MCM) and frequency shift keying (FSK) [12]. In MCM the data is sent over multiple carriers simultaneously. FSK uses a single carrier tone, selected from a set of orthogonal carriers to transmit the data. During each symbol interval the FSK modulator sends a pulse of one tone or the other depending upon the information bit to be transmitted. Equation 2-7 describes the generation of a FSK signal.

Equation 2-7

$$s_i(t) = A\exp(2\pi f_i t), for \frac{-T}{2} \le t \le \frac{T}{2}$$
$$= 0, otherwise$$

where,

$s_i(t)$	=	FSK signal
A	=	carrier amplitude
f_i	=	Frequency of the sinusoid
T	=	Symbol Duration

In the case of OFDM modulation, the orthogonal carriers are transmitted simultaneously. Orthogonality amongst the subcarriers is achieved by ensuring that each subcarrier is separated by an integer multiple of the inverse of the duration of the OFDM symbol. The effective bandwidth occupied by the OFDM signal is thus the aggregate of the bandwidth of the individual subcarriers. The structure of OFDM mitigates the effects of Inter-symbol Interference (ISI) caused by in a Rayleigh fading environment by spreading the symbol in time domain.

In order to ensure that the subcarrier frequencies do not interfere with each other during detection, the subcarriers are selected from a set of orthogonal signals. This means that the spectral peak of each subcarrier overlaps with the spectral nulls of the remaining carriers. This can be achieved by ensuring that the individual subcarriers are spaced by an integer multiple of the inverse of the symbol duration. Highest spectral efficiency will be achieved when the individual carriers/subcarriers are placed precisely one symbol duration apart. One of the ways to implement OFDM uses the Discrete Fourier Transform pair (IDFT/DFT) [12]. The implementation of an Inverse Discrete Fourier Transform (IDFT) which corresponds to OFDM modulation is shown in Figure 2-4;

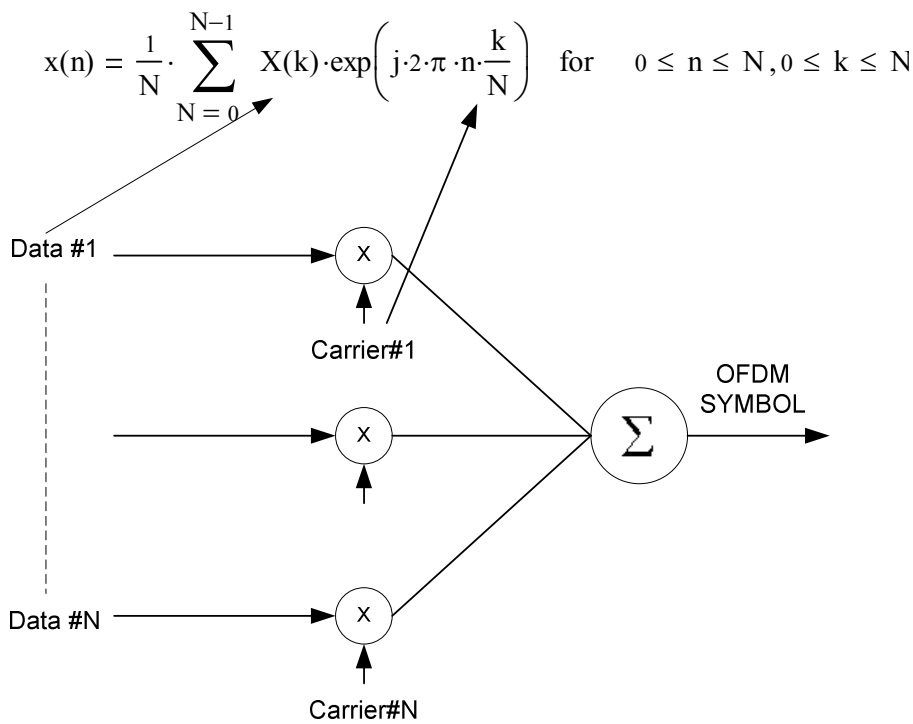

Figure 2-4: OFDM modulation using IFFT.

A Discrete Fourier Transform (DFT) emulates OFDM demodulation and is given by;

$$X(k) = \frac{1}{N} \sum_{n=0}^{N-1} x(n) \exp(-j2\pi n \frac{k}{N}), for 0 \le n \le N; 0 \le k \le N$$ **Equation 2-8**

where

N	=	Size of DFT
K	=	Frequency Index
N	=	Time index
$X(k)$	=	Data corresponding to k^{th} subcarrier
$X(n)$	=	Time domain signal

The output sequence *x(n)* is transmitted one symbol at a time across the channels. From Figure 2-4 it is evident that *x(n)* represents summation of *N* individual subcarriers each modulated by respective data symbols. Prior to the transmission, a cyclic prefix is appended at the front of the sequence *x(n)*, to obtain an OFDM symbol. This cyclic prefix, which is also referred to as a guard band [12], is generated from the last *m* samples of *x(n)* and can be expressed as;

$$x(n-m) = x(N+n-m), for(n-m) \leq p$$ **Equation 2-9**

where

$x(n)$	=	Time domain signal
p	=	Length of cyclic prefix

The length of the cyclic prefix (CP) *p* is generally selected to be one-fourth of the length of IDFT output. There are two advantages of using a cyclic prefix. First, appending the tail portion of IDFT output in front makes the OFDM signal appear periodic with period N. Secondly; if the length of the cyclic prefix is longer than the channel spread of the channel then the errors due to ISI will be decreased. Further, the periodicity translates the linear convolution to circular convolution. Thus the received signal at the demodulator can be expressed in time and frequency domain as shown in Equation 2-10 and Equation 2-11.

$$r(n) = x(n) \otimes h(n) + w(n)$$ **Equation 2-10**

where

r(n)	=	Received Signal
h(n)	=	Channel Impulse Response
w(n)	=	Additive white Gaussian noise

and

$$R(k) = X(k).H(k) + W(k)$$ **Equation 2-11**

where

R(k)	=	DFT of received signal
X(k)	=	DFT of transmitted signal
H(k)	=	DFT of channel impulse response
W(k)	=	Additive white Gaussian noise

The main performance differences between a single carrier and an OFDM system are differences in robustness to fading, non-uniform frequency response of the channel and synchronization errors. Under conditions of perfect synchronization and non-frequency selective channels the performance of a single carrier system and an OFDM system is equivalent. To ensure proper synchronization and flat channel frequency response, a number of synchronization and equalization algorithms are implemented in OFDM systems.

OFDM transmission is used for both broadcast type systems like Digital Audio Broadcast (DAB) [13] and packet switched networks like 802.11x based Wireless Local Area Networks (WLANS) [14]. In broadcast systems the transmitter transmits data continuously allowing the receivers to spend a relatively long time to acquire the signal and then switch to demodulation mode. However, WLAN systems have a very short time after the packet has been detected to synchronize with the transmission. This procedure is facilitated by adding a preamble at the beginning of packets which aids in synchronization. A preamble is a known symbol which is transmitted at the beginning of every packet. The channel equalization for OFDM systems can be easily implemented in

frequency domain. Sections 2.2.2 and 2.2.3 describe the synchronization and equalization structures in detail.

2.2.1. Packet Detection

Timing estimation consists of two parts, viz. packet detection and symbol synchronization [15]. In the case of broadcast based networks, packet detection is not required as the transmission is continuous. In packet based networks, which are essentially random networks, the receiver is constantly monitoring the channel for any signs of activity. Once a packet is detected the next step is to search for the start of the data symbols. As mentioned in Section 2.2, a preamble is used in packet oriented networks which facilitates in the packet detection and symbol synchronization. Packet detection can be interpreted as coarse estimation and symbol synchronization as a fine tuning algorithm for detecting the start of signal. In terms of a binary hypothesis test, packet detection can be interpreted as a choice between two hypotheses;

H_0 = Packet not present.

H_1 = Packet present.

The simplest method for detecting the start of a packet is to calculate the received signal energy [16]. The decision variable, m_n, used is calculated as shown in Equation 2-12.

Equation 2-12

$$m_n = \sum_{k=0}^{L-1} r_{n-k} r^*_{n-k}$$

where,

m_n	=	Decision variable
r_n	=	Received signal

In the absence of actual transmission, the received signal r_n consists of noise samples w_n alone. When the actual transmission starts, the received signal is the summation of noise samples w_n and the desired data signal x_n. The decision variable, m_n, is calculated as a sum of the squares of the received sample amplitudes over a window of time, L. This

represents the energy contained in that window and is referred to as a sliding window. For iterative computation of the m_n the following formula is used;

Equation 2-13

$$m_{n-1} = m_n + |r_{n+1}|^2 - |r_{n-L+1}|^2$$

where,

m_n	=	Decision variable
r_n	=	Received signal

Once the value of decision variable m_n exceeds the desired threshold, a valid transmission is assumed. This method, however, suffers from a significant drawback as the detection performance depends upon the value of the threshold which is used for the comparison. The receiver threshold will change dynamically depending upon the received signal strength. When there is no transmission taking place the received signal consists of noise alone. The noise level is however unknown and can change if the receiver adjusts the frontend amplifier settings or in presence of spurious emissions in the frequency band of interest. Similarly a valid packet transmission also suffers from the irregularity of the received signal strength. In order to alleviate the degradation in performance due to fixed thresholding, a double sliding window technique is implemented. In the double sliding window packet detection algorithm, the received power is calculated over two consecutive windows. For double window implementation the decision variable m_n is calculated as shown in Equation 2-14.

Equation 2-14

$$a_n = \sum_{m=0}^{M-1} r_{n-m} r^*_{n-m}$$

$$b_n = \sum_{l=1}^{L} r_{n+1} r^*_{n+1}$$

$$m_n = a_n / b_n$$

where

a_n	=	Energy in window A
b_n	=	Energy in window B
r_n	=	Received Signal

m_n = Decision variable

The working of the double window sliding algorithm can be illustrated as shown below;

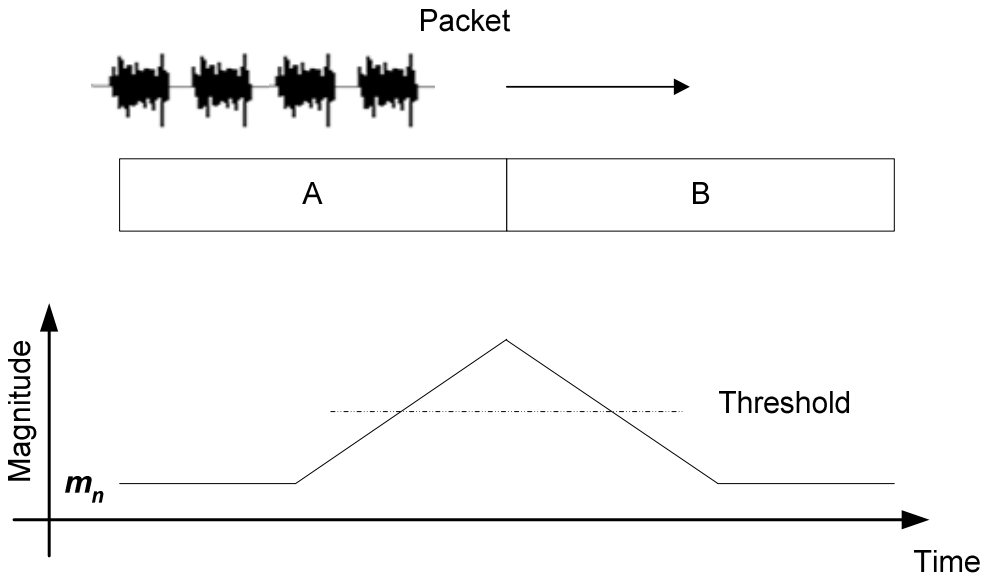

Figure 2-5: Packet Detection algorithm: Magnitude of decision variable.

From Figure 2-5, it can be observed that in the absence of a transmission, the magnitude of decision variable m_n, which is the ratio of the received signal strengths in both windows, is flat as both the windows contain noise samples of approximately equivalent energy. As the packet edge starts entering the window *A*, the signal strength calculated over window *A*, a_n starts increasing while that in window *B*, b_n still equals the received noise strength. The maximum value of the decision variable m_n occurs when window *A* consists entirely of the packet transmitted while window B consists of noise samples alone. After that instant window *B* also starts receiving the packet and hence the magnitude of decision variable starts decreasing again. In addition to obtaining a coarse estimate of packet timing, the double window algorithm also gives an estimate of the Signal to Noise (SNR) ratio as shown below;

Equation 2-15

$$m_{peak} = \frac{a_{n\max}}{b_{n\min}} = \frac{S+N}{N} = \frac{S}{N} + 1$$

$$\frac{S}{N} = m_{peak} - 1$$

where,

m_{peak}	=	Maximum value of decision variable
a_n	=	Maximum energy content from window A
b_n	=	Minimum energy content from window B
S/N	=	Signal to Noise ratio of the received signal

Figure 2-6 shows the variation in the magnitude of decision variable along the length of the preamble using the packet detection algorithm.

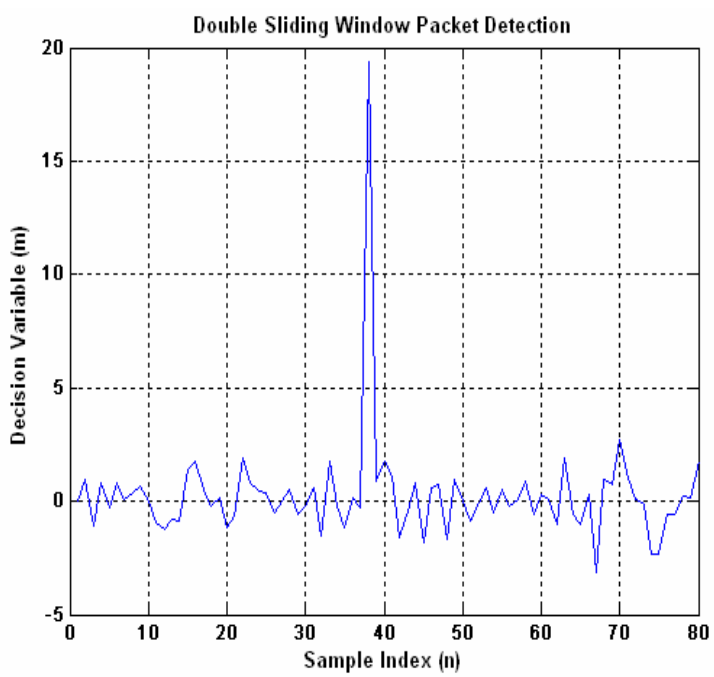

Figure 2-6: Decision variable m_n for SNR of 20 dB. As seen m_{peak} is located at sample index 38.

2.2.2. Symbol Synchronization

Symbol synchronization is achieved by transmitting a known preamble [12]. Once a coarse estimate of the beginning of packet has been achieved by the packet detection

algorithm, a simple correlation based approach can be used to fine tune the start of transmission. The fine tuning is achieved by calculating the cross correlation between the received signal, *r(t)* and the known reference template, *s(t)*.

The sample index which corresponds to the maximum correlation is selected as the likely start of transmission. The accuracy of the correlation algorithm depends upon the length over which correlation is performed. However, there is a tradeoff between the length of correlation and the time required for computation. Figure 2-7 shows the performance of the symbol synchronization algorithm used in the current implementation.

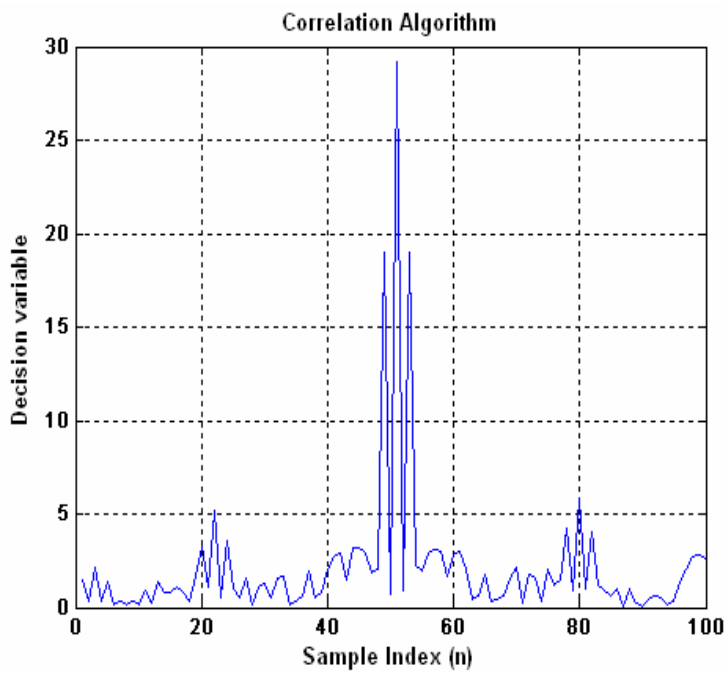

Figure 2-7: Correlation between a known header and the received signal for SNR of 20 dB.

The performance of the symbol synchronization algorithm depends upon the robustness of the OFDM system to multipath and Inter-symbol Interference (ISI). As mentioned in Section 2.2, the OFDM symbol is formed by concatenating the output of an IDFT operation by a copy of the last p samples, where p represents the length of cyclic prefix. If the rms value of the channel delay spread is less than the length of the cyclic prefix then no ISI interference occurs. Ideally, the DFT window should start at the end of the cyclic prefix. However, due to synchronization errors it is possible that the symbol start is detected after the end of cyclic prefix. This means that the DFT window now extends into

the ensuing OFDM symbol resulting in ISI. In order to ensure that no ISI takes place, the start of symbol is biased such that it always points to a sample inside the cyclic prefix of that OFDM symbol. Since the cyclic prefix is composed of the last p samples, the frequency content of the OFDM symbol is preserved, only the time domain data changes. Figure 2-8 below shows the operation of symbol synchronization;

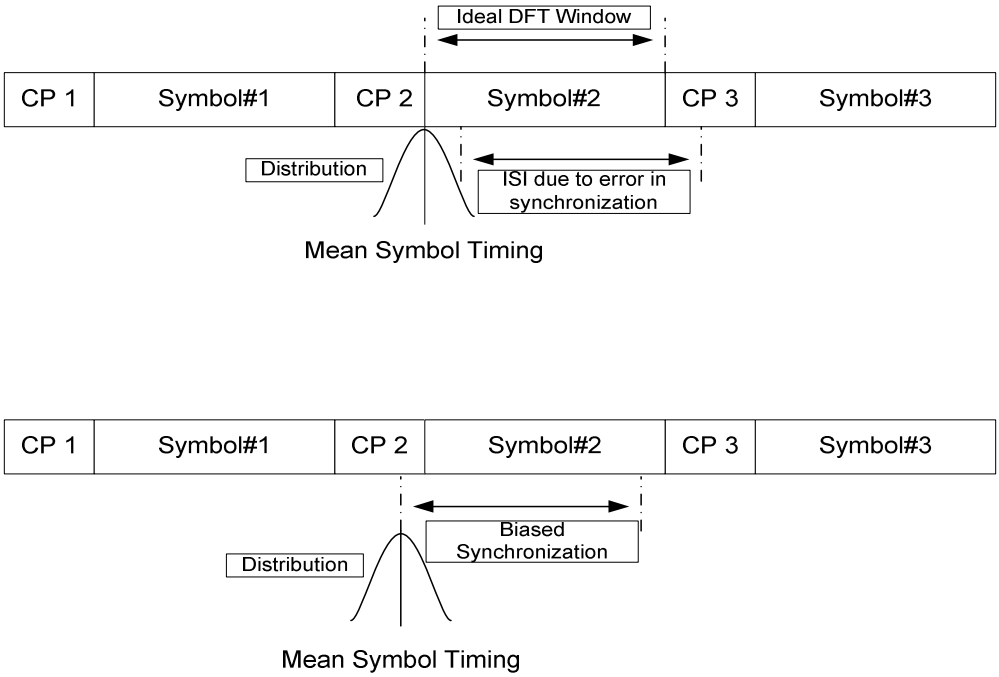

Figure 2-8: Ideal Synchronization for packet header.

In Figure 2-8 we have three contiguous OFDM symbols. As mentioned above, the ideal DFT window for symbol#2 would be at the end of the cyclic prefix, CP#2. However, if the DFT window extends into the cyclic prefix of symbol#3, then the demodulated data will be corrupted. In Figure 2-8 we observe that the start of symbol is biased such that it lies within the cyclic prefix CP#2. Thus, it is ensured that the DFT window for symbol#2 will lie within the symbol boundary.

2.2.3. Equalization

The structure of OFDM allows high spectral efficiency by transmitting data in parallel streams. Mobile radio channels, however, are affected by multipath fading, which results

in degraded radio performance. In OFDM, the number of subcarriers is chosen such that the channel frequency response is essentially flat over each subcarrier, thus reducing the effect of fading and non-uniform channel frequency response. Combining channel coding and OFDM permits reliable data transmission over dispersive channels. In order to compensate for multipath fading and channel frequency response, various channel equalization techniques are used. Equalization techniques can be implemented in the time domain and/or the frequency domain [17] [18]. Many adaptive equalization algorithms are used to compensate for multipath in the frequency domain. Commonly used algorithms include decision feedback equalization (DFE) and Least-Mean-Squares (LMS) equalization. Channel equalization in the frequency domain can be performed using two main approaches. The first approach uses training data transmitted on every subcarrier at the beginning of each transmitted packet. This technique, which is widely used in WLAN systems, is referred as a block-type pilot structure. The second approach uses a comb-type pilot arrangement and involves inserting pilot subcarriers into OFDM symbols at a suitable spacing. The frequency response for the entire channel is then interpolated from the channel response obtained at pilot sub-carriers. Section 2.2.4 discusses frequency domain adaptable equalization algorithm which uses a block type pilot structure.

2.2.4. Frequency domain Adaptive Equalization methods

From Equation 2-11, we observe that the received signal is given by

$$R(k) = X(k)H(k) + W(k)$$ **Equation 2-16**

where

R(k)	=	DFT of received signal
X(k)	=	DFT of transmitted signal
H(k)	=	DFT of channel impulse response
W(k)	=	Additive white gaussian noise

Let the estimated channel response be denoted by *C(k)* such that the equalized data sample $\overline{X}(k)$ is given by

$$\overline{X}(k) = R(k)C(k) = X(k)H(k)C(k) + W(k)C(k)$$ **Equation 2-17**

where

$\overline{X}(k)$	=	Equalized data sample
X(k)	=	DFT of transmitted signal
H(k)	=	DFT of channel impulse response
W(k)	=	Additive white gaussian noise
C(k)	=	Estimated channel response

Now if the estimated channel response *C(k)* is $C(k)= H^{-1}(k)$ then, in absence of noise, the equalized sample will equate to $\overline{X}(k) = X(k)H(k)C(k) = X(k)$ [19].

As discussed in Section 2.2.3, in the block-type pilot arrangement used in many packet switched networks, the initial estimate of the channel response is obtained from the training data. This initial estimate can now be used to equalize the received data samples. Thus the error in estimation of the received symbols will be given by Equation 2-18 [33]:

$$\varepsilon(j,k) = \bar{X}(j,k) - \prod(\bar{X}(j,k))$$ **Equation 2-18**

where

$\varepsilon(j,k)$ = Error between the jth carrier of kth symbol

$\prod(.)$ is the threshold operator which maps the estimated sample to a valid data value. The error in estimation depends on the noise W(k).

The simplest implementation for an equalizer structure uses the Least Squares (LS) algorithm [20]. The LS estimate which minimizes the error is given by Equation 2-19.

$$C(k) = X^{-1}(k)R(k)$$

Equation 2-19

In presence of slow fading, we can use the decision feedback equalizer (DFE) structure to update the channel coefficients associated with each subcarrier. The decision feedback equalizer for the kth subcarrier is given by the following equation,

$$C(k) = \frac{R(k)}{\prod(\bar{X}(j,k))} \; fork = 0,\ldots,N-1$$

Equation 2-20

The performance of the DFE depends upon the correctness of the mapped symbols and hence is prone to errors in fast fading environments. Another possible approach for the equalizer structure is Minimum Mean Square error (MMSE) [19]. From Equation 2-18 we can observe that the error can be reduced by using the mean squared error as the cost function [33].

$$\frac{\partial|\varepsilon(j,k)|}{\partial C} = 2\varepsilon(j,k)R^{*}(j,k)$$

Equation 2-21

The channel response coefficients are updated by the addition of a weighted error term [33].

$$C(j,k) = C(j-1,k) + 2\mu\varepsilon(j-1,k)R^{*}(j-1,k)$$

Equation 2-22

where C(j,k) is the channel response corresponding to the kth subcarrier at jth time instant and $\mu \in [0,1]$ represents the learning constant. This algorithm however has a higher

convergence time. In order to reduce the convergence time a proportional equalizer is used. The estimated sample $\bar{X}(k)$ can be represented shown in Equation 2-23 [20].

$$\bar{X}(k) = \frac{Y(k)}{C(k)} = X(k) + \frac{W(k)}{H(k)}$$

Equation 2-23

It can be observed that the performance of a decision feedback equalizer depends upon the signal-to-noise ratio of the received signal. In the proportional equalizer algorithm we average the noise out from *C(k)*. The coefficient update algorithm is given by Equation 2-24 [17]:

$$C(j,k) = (1-\Delta)C(j-1,k) + \Delta\left[\frac{\prod(\bar{X}(j,k))}{R(j-1,k)}\right]$$

Equation 2-24

where $\Delta \in [0,1]$ is a learning constant which weighs the influence of old coefficient on the new coefficient. It has been shown in [17] that a proportional equalizer has a higher convergence rate than LMS.

3. MODEM DESIGN

The term Modem stands for Modulator/Demodulator and can be defined as a communications device which converts a signal from one form to another for transmission over a communication channel [10]. Historically, modems have been associated with telephony where the primary function of the device was to convert digital signals into analog signals for transmission over the telephone lines. Nowadays, modems are used over cable connections, satellite links, land mobile radios, etc. This Chapter introduces the different aspects of OFDM modem design and includes a detailed discussion on the various modules used in the modulation and demodulation of a data signal.

The OFDM modem design can be demarcated into two parts. The first part deals with the modules which make up the modulator and demodulator. As mentioned in Chapter 1, the OFDM modem should be capable of communicating using standard Ethernet protocols and with an analog radio. The current modem hardware consists of a NetBurner® card, a Motorola 56L307® evaluation module (EVM) DSP evaluation board and a customized daughter card. The NetBurner® card houses the Ethernet stack while the daughter card is used to provide an interface between the radio and the modem. The EVM is used to implement the signal processing associated with modulation and demodulation. Sections 3.1 and 3.2 describe the implementation of the modulator and demodulator in the EVM. The second part of the modem design deals with the system architecture which will be discussed in Chapter 4.

3.1. Modulator Block Diagram

The function of the modulator is to process the raw data received over a serial port from the NetBurner into a signal compatible with the radio used. The modulator block diagram can be partitioned into three distinct modules. The first part involves scrambling operation followed by convolutional coding and interleaving. The second part includes the generation of OFDM symbols at the baseband frequency. In the final phase the

generated baseband signal is upconverted to the required audio band. Figure 3-1 shows the different modules for the modulator.

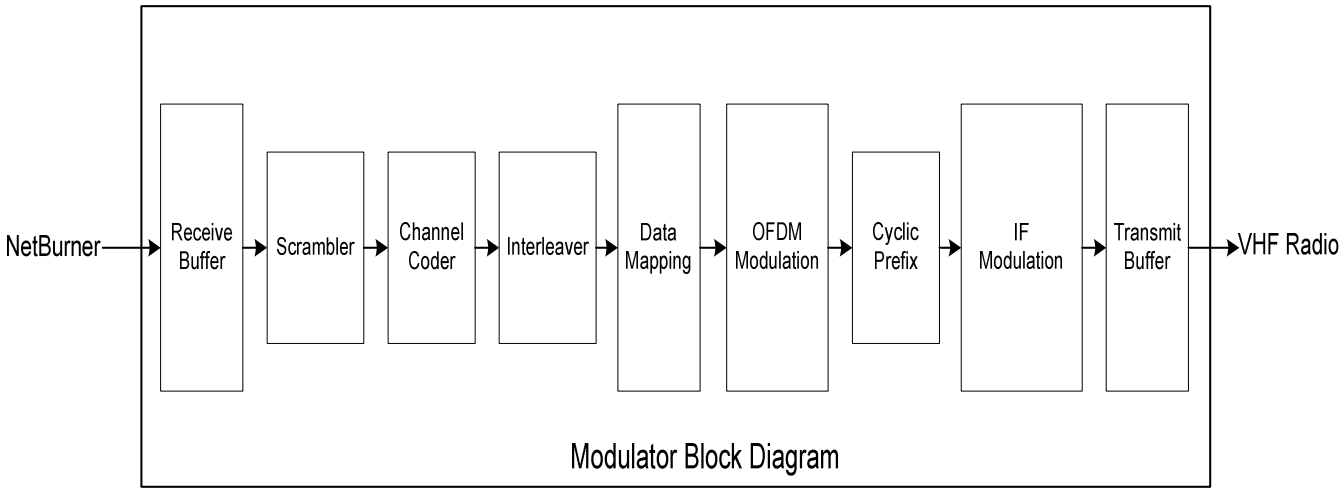

Figure 3-1: Block diagram of the modulator.

Sections 3.1.1-3.1.7 explain each of the modules shown in Figure 3-1 in detail.

3.1.1. Scrambling:

A data scrambler is used to avoid long durations of 1s or 0s which may result in loss of synchronization in the demodulator. The scrambler operates continuously on the data bits. The scrambler structure used is similar to the one used for IEEE 802.11x WLANS and is defined by the generator polynomial given in Equation 3-1.

$$s(x) = x^7 + x^4 + 1 \qquad \textbf{Equation 3-1}$$

where

s(x) = Scrambling equation.

Figure 3-2 shows the structure of a scrambler as defined by *s(x)*.

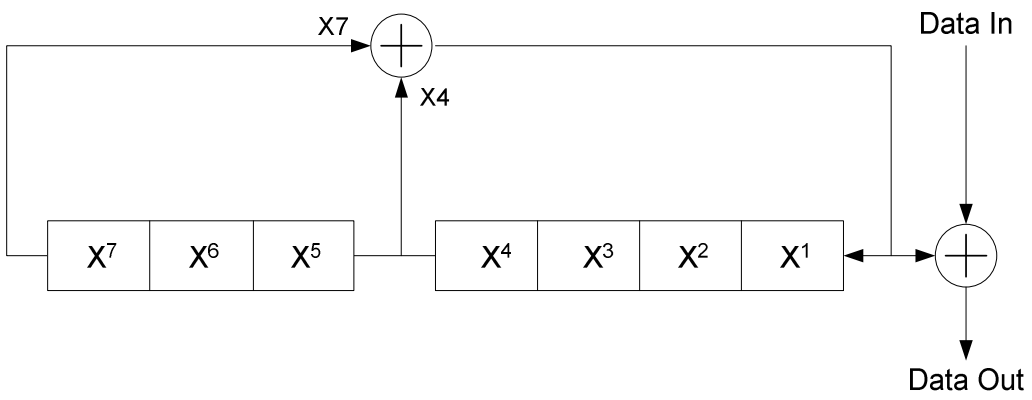

Figure 3-2 : Block diagram for scrambler.

The operation of the scrambler can be compared to that of a linear feedback shift register. The individual bits enter the shift register and get permuted based on the scrambing equation. The output bit for the scrambler is given by the expression in Equation 3-2.

$$DataOut = DataIn \oplus x^4 \oplus x^7 \qquad \textbf{Equation 3-2}$$

3.1.2. Channel Coder

Channel coding is used to improve the performance of the system in the presence of noisy and fading environments [21]. Reliability is obtained by selective addition of redundant bits into the transmitted information signal. The added bits can be used for both detection and correction of errors. However the increased reliability comes at the expense of a reduction in the data rate. There are two main classes of channel codes viz; Block codes and Convolutional codes. Block codes are based on finite field arithmetic and abstract algebra and can be used in both detection and correction of errors, which occur during transmission. Block codes accept a block of *k* information bits as input and produce a block of *n* coded bits. Some of the commonly used block codes are Hamming codes, Golay Codes, BCH codes and Reed Solomon codes.

The most widely used channel codes are convolutional codes. The codes are developed for real-time error detection and correction. The convolutional codes convert the entire data stream into code words. The encoded data not only depends on the current input but

also on a fixed number of past inputs. The main decoding algorithm used for decoding convolutional codes is the Viterbi algorithm.

A convolutional code is defined on the basis of the set of interconnections between stages of one or more shift registers and the output bits of the encoder. The coding rate is given by the ratio of *k/n*, where *k* represents the number of input bits and *n* represents the number of channel symbols output by the encoder in a given encoder cycle. The constraint length parameter, K, denotes the duration of the convolutional encoder. The convolutional encoder used in the current implementation is k/n = ½; K = 3 (constraint length). This translates into a doubling of the bit rate at the output of the coder.

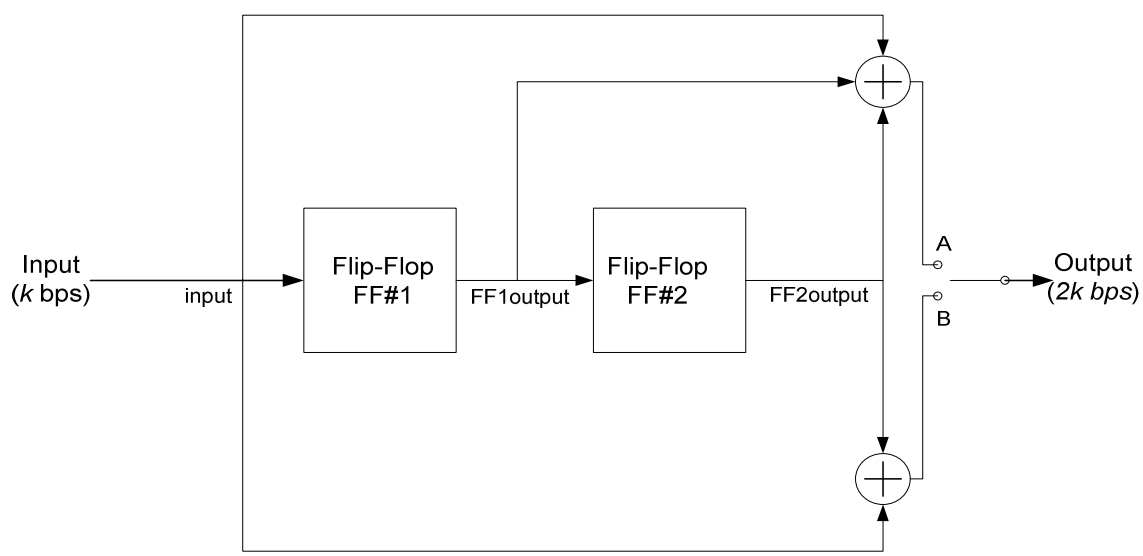

Figure 3-3: Block diagram for the convolutional encoder

Figure 3-3 shows the construction of a (½, 3) convolutional coder. It can be observed from the coder that the output rate for the coder is $n = 2k$ bps, where k represents the input bit rate. The outputs A and B are derived from a combination of input and the outputs of the shift registers as given in Equation 3-3.

$$A = input \oplus FF1output \oplus FF2output$$
$$B = input \oplus FF2output$$

Equation 3-3

where,

A	=	Output#1
B	=	Output#2
FF1output	=	Output for Flip flopFF#1
FF2output	=	Output for Flip flop FF#2

For example suppose that the input data stream is 10101. Let the initialization state for the coder be the reset state. The code words corresponding to the input will be as shown in Table 3-1.

Input	FF#1output	FF#2output	Output A input ⊕ FF1output ⊕ FF2output	Output B input ⊕ FF2output
1	0	0	1	1
0	1	0	1	0
1	0	1	0	0
0	1	0	1	0
1	0	1	0	0

Table 3-1: Output of a (1/2, 3) convolutional encoder

The output of the channel coder will be 1110001000. Thus the output bit rate *n* is twice the input bit rate *k*.

3.1.3. Interleaver

Interleaving is used to distribute the coded bits in time, frequency or both to mitigate the degradation in performance caused due to burst errors [12]. The type of interleaving pattern used depends upon the channel characteristics. If the system operates in an AWGN environment alone, then rearranging adjacent bits does not improve the Bit Error Rate (BER). However errors caused due to fading and random bursts of noise can be

corrected by a combination of channel coding and interleaving. There are two main types of interleaver structures viz. Block interleavers and Convolutional interleavers.

The convolutional interleaver operates by writing the bits into the commutator at one end and reading the bits out from the other end. The shift registers, *FF* are clocked after each cycle. The main advantage of a convolutional interleaver is that it requires approximately half of the memory required by a block interleaver, discussed later, to obtain the same degree of separation between the adjacent bits. Figure 3-4 shows the construction of a convolutional interleaver.

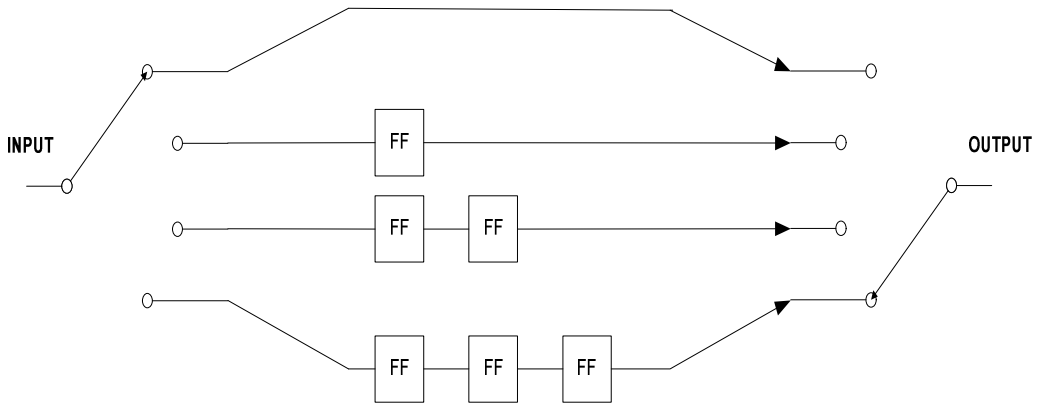

Figure 3-4: Convolutional Interleaver.

Block interleavers operate on blocks of data bits at a time. The number of bits in the block is referred to as the interleaving depth. The interleaving depth gives the separation between adjacent bits. A block interleaver can be described in terms of the matrix structure into which data is written and read. An 8x8 matrix structure is used in the current implementation.

Figure 3-5 shows a 8x8 block interleaver. The bits belonging to the same byte of data enter along the rows of the interleaver. As can be seen in Figure 3-5 the nth byte occupies the nth row.

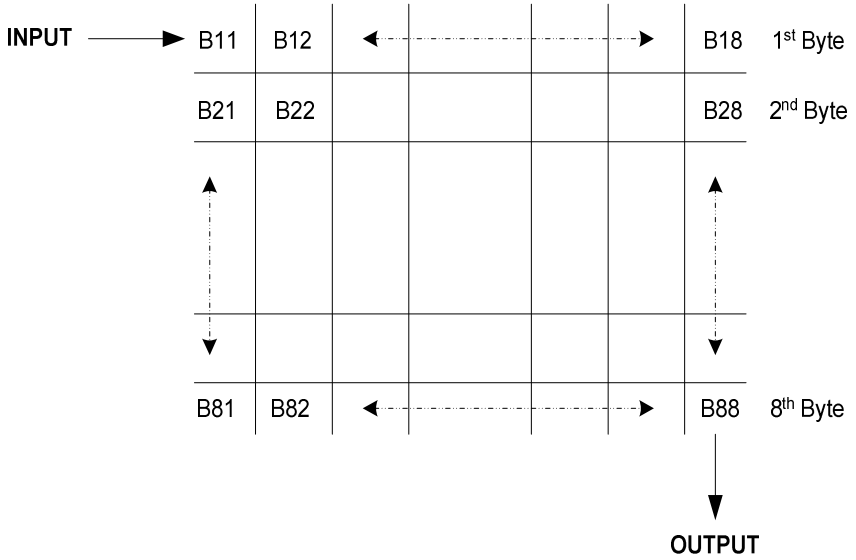

Figure 3-5: Block Interleaver.

While reading, the output byte is generated from individual columns. Thus the last output byte will consist of the 8th bit of all the input bytes. Therefore the adjacent bits [$b_{r,c}$, $b_{r,c+1}$], where the index r indicates the row number and index c gives the column location, are separated by a distance of a byte.

3.1.4. Data Mapping

Once the data is obtained from the interleaver, the bits are mapped onto a signal constellation. This process is referred to as data mapping or data modulation [22]. In the current implementation six bits are mapped into a 64-point QAM constellation [14] as shown in Figure 3-6 [14]. Thus every six bits are coded into a complex I/Q data code word, where the real part represents in-phase (I) channel data and imaginary term represents quadrature (Q) channel data.

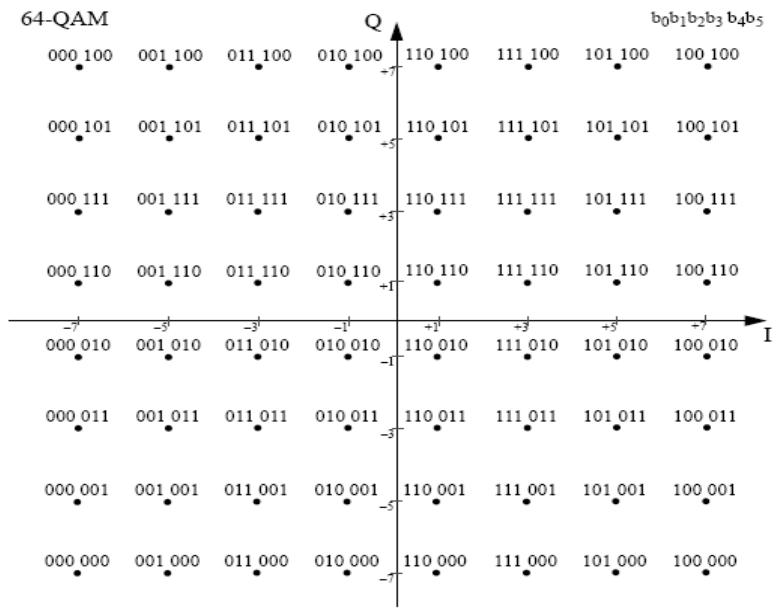

Figure 3-6: Constellation diagram for 64 QAM

3.1.5. OFDM Modulation

As discussed in Chapter 2, OFDM modulation is performed by applying the Inverse Fast Fourier Transform (IFFT) operation on the constellation mapped complex data set. The size of the IFFT used gives the maximum number of subcarriers that can be used to transmit data. The IFFT operation is given by the Equation 3-4.

$$X(k) = \frac{1}{N}\sum_{n=0}^{N-1} x(n)\exp(j2\pi n\frac{k}{N}), for 0 \le n \le N; 0 \le k \le N$$ **Equation 3-4**

where

N	=	Size of DFT
K	=	Frequency Index
N	=	Time index
$X(k)$	=	Data corresponding to k^{th} subcarrier
$x(n)$	=	Time domain signal

In the current implementation, the size of the IFFT used is 64. The combined bandwidth of all the subcarriers in the OFDM symbol is 1 KHz. The time domain and frequency domain signal characteristics will be explored in Chapter 8.

3.1.6. Cyclic Prefix

After OFDM modulation, a cyclic prefix is appended at the beginning to form an OFDM symbol. The advantages of incorporating a cyclic prefix have been discussed in Chapter 2. The length of cyclic prefix selected for the current implementation is 16, which is one fourth the length of the IFFT.

3.1.7. Upconversion

The baseband OFDM symbol is a complex signal with the real part corresponding to I channel data and the imaginary part corresponding to the Q channel data. The need for upconversion arises due the frequency response of the radio which is designed for the transmission of voice signals. The frequency response of the radio can be equated roughly to that of a bandpass filter with cut off frequencies at 300 Hz and 3.3 KHz. In order to ensure that no information is lost, the baseband OFDM symbol has to be upconverted to a suitable passband. The Figure 3-7 represents the approximate magnitude of the complex baseband OFDM signal.

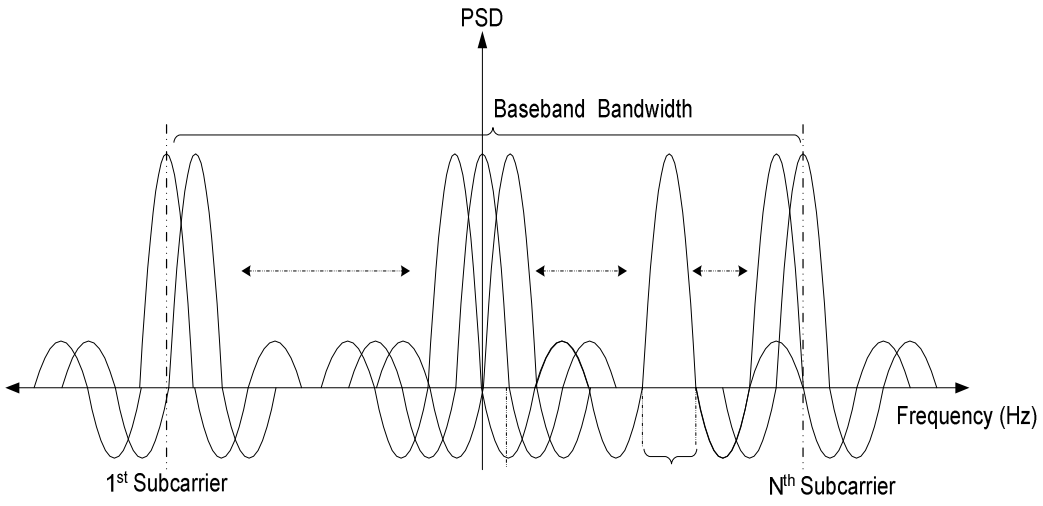

Figure 3-7: Frequency spectrum for baseband OFDM symbol.

The choice of audio band carrier frequency used for upconversion depends on the sampling rate of the codec, the frequency response of the radio used and the bandwidth of the baseband signal.

Before upconverting the baseband signal to the required audio band representation, the signal it is interpolated. The primary reason for interpolation is to increase the sampling rate at the output of one system so as to ensure the compatibility with another system operating at a higher sampling rate. The interpolation operation consists of upsampling the baseband signal followed by filtering. Upsampling refers to the process of inserting samples between the original samples to increase the sampling rate. There are many ways of accomplishing the upsampling operation. The most commonly used techniques are zero-order-hold and zero-insert upsampling. In the case of zero-order hold upsampling, the increase in sampling rate of the input is achieved by inserting (M-1) new samples between successive input samples. The upsampling factor, M, is an integer number. The (M-1) new samples are set equal to the value of the previous input sample. The zero-hold upsampling is also referred to as staircase upsampling. In zero-insert upsampling, the sample rate of the input is increased by inserting (M-1) zero-valued samples between successive inputs.

Once the baseband signal has been interpolated it is multiplied with the audio band carrier frequency to obtain a audioband representation. Figure 3-8 shows the spectrum of the upconverted OFDM symbol.

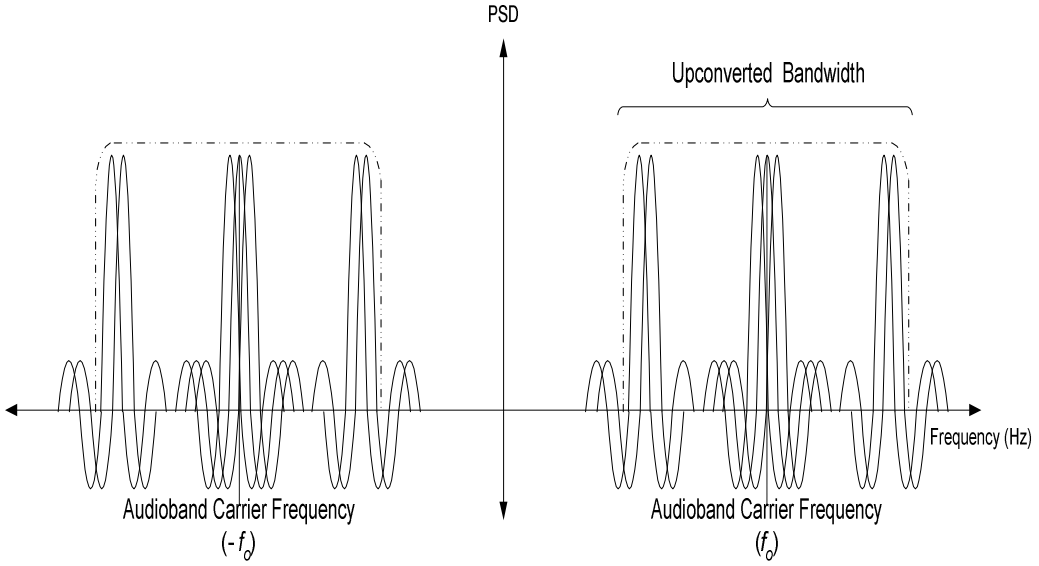

Figure 3-8: Frequency spectrum of upconverted OFDM symbol

As mentioned in Sections 3.1.5 and 3.1.6, for the current implementation the total number of samples representing a single baseband OFDM symbol is 80 samples. Also, in the current implementation, the interpolation operation consists of zero-insert upsampling followed by FIR filtering [23]. The interpolation factor is 4 and the length of FIR filter is 24. For the codec sampling rate of 8 KHz and audio band carrier frequency of 2 KHz the spectrum of the baseband OFDM symbol and upconverted OFDM symbol are given in Figure 3-9 and Figure 3-10 respectively. Further details on the calculation of bandwidths and data rates are given in Chapter 7.

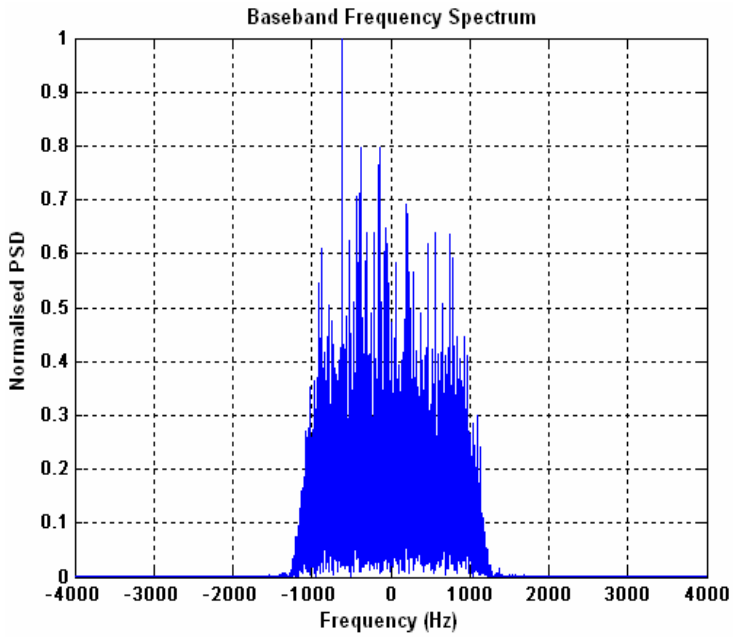

Figure 3-9: Baseband OFDM frequency spectrum generated using sampling rate of 8 Khz.

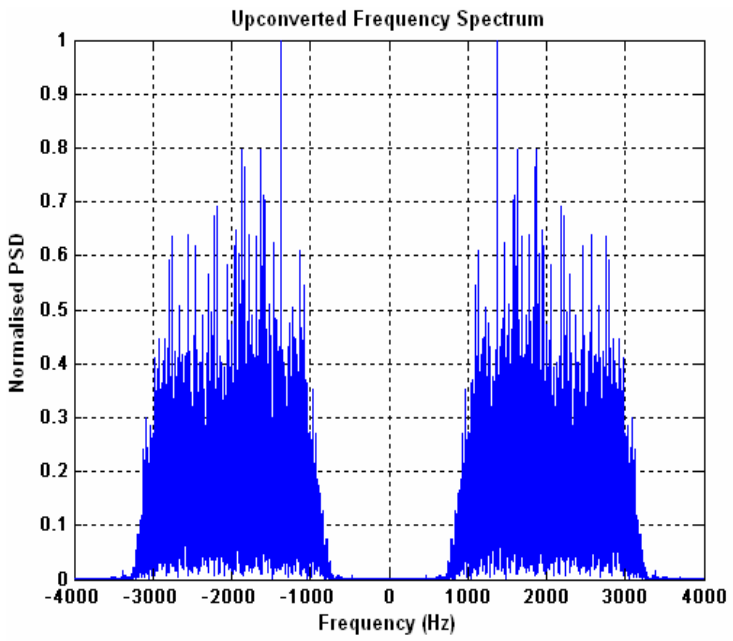

Figure 3-10: Upconverted OFDM frequency spectrum using audioband carrier of 2 Khz and sampling rate of 8 Khz.

Once the audio band OFDM symbol is generated it is stored in a transmit buffer. The transmit buffer is used to store individual symbols temporarily, and aids in the real-time transmission of OFDM signal to the codec. The construction of these buffers will be explained in detail in Appendix D and F.

Figure 3-11 shows the translation of data bits into an audio band OFDM symbol for the system implemented. As seen from the figure, the 24 bytes of data received at the serial interface translates into 320 sample points of audio band OFDM symbol. All the modulator modules operate on blocks of data. The details of the software implementation of the modulator modules are given in Chapter 7.

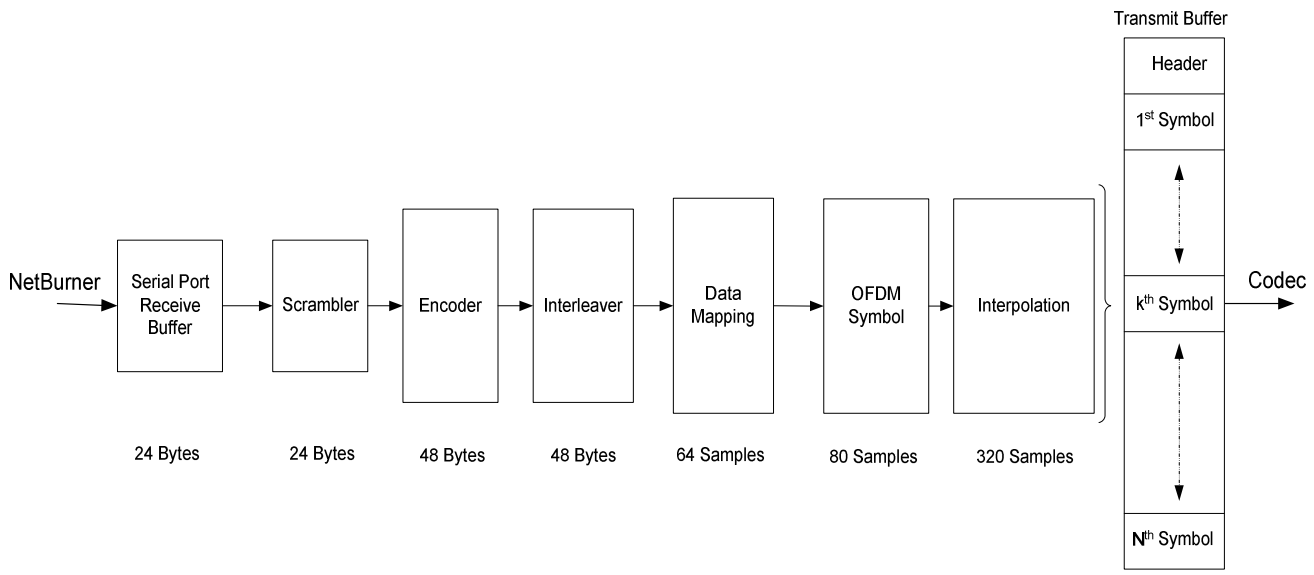

Figure 3-11: Translation of individual data bits to OFDM symbols.

3.2. Demodulator Block Diagram

The function of the demodulator is to process the received signal at the radio into raw data bits and transmit these bits over the serial port to the NetBurner. The demodulator block diagram can also be partitioned into three distinct modules. The first part involves demodulation of the received audio band OFDM signal into its baseband representation. The second part includes demodulation of the baseband OFDM symbols and demapping the complex symbols into their corresponding bit representation. In the final phase, the bits are deinterleaved, decoded and descrambled to obtain raw data bits to be transmitted over the serial port to the NetBurner card.

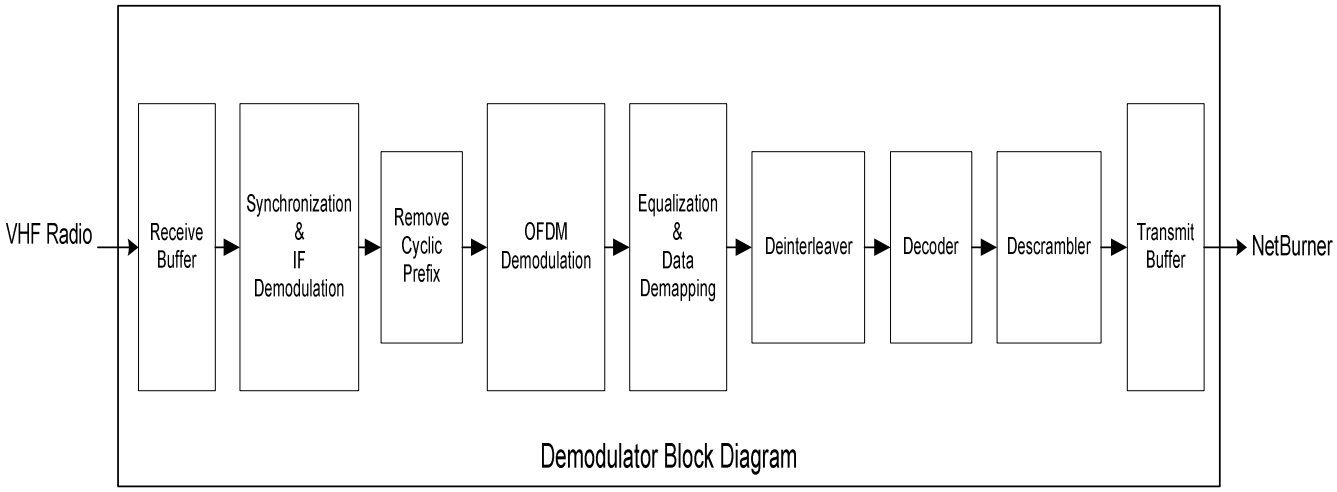

Figure 3-12: Demodulator block diagram.

Sections 3.2.1 to 3.2.8 describe each of the modules in detail.

3.2.1. Synchronization

As described in the Chapter 2, a demodulator is required to synchronize with the incoming transmission. The synchronization algorithm is a two step process. The first step is double window algorithm which is followed by correlation. Both of these stages have been discussed in detail in Chapter 2.

3.2.2. Downconversion

The received OFDM signal is first downconverted into its baseband representation. The downconversion consists of demodulation and downsampling. In demodulation, an audio band carrier frequency is used to demodulate the received signal. The output is then passed through a lowpass FIR filter to obtain the baseband signal. For the current implementation the length of the lowpass FIR filter used is 24 and the cutoff frequency for the filter is at 1 KHz. Once the baseband signal has been derived it is downsampled. The downsample factor is 4, which is same as the interpolation factor.

3.2.3. OFDM Demodulation

As discussed in Chapter 2, OFDM demodulation consists of calculating the Fast Fourier Transform (FFT) for the samples. A Discrete Fourier Transform (DFT) emulates OFDM demodulation and is given by Equation 3-5.

$$X(k) = \frac{1}{N}\sum_{n=0}^{N-1} x(n)\exp(-j2\pi n\frac{k}{N}), for 0 \le n \le N; 0 \le k \le N$$ **Equation 3-5**

where

N	=	Size of DFT
K	=	Frequency Index
N	=	Time index
$X(k)$	=	Data corresponding to k^{th} subcarrier
$x(n)$	=	Time domain signal

For the current system, the process of downconversion and OFDM demodulation can be summarized as follows. The OFDM symbol obtained at the output of downconversion is 80 samples long. The first 16 samples are the part of cyclic prefix. The cyclic prefix, as described in Chapter 2, consists of the rear 16 samples of the IFFT output and hence can be ignored without loss of any information. The OFDM demodulation, i.e the FFT, is performed on the remaining 64 samples.

3.2.4. Equalization

As described in Chapter 2, equalization is used to mitigate the effect of multipath fading and compensate for any possible asymmetric frequency response of the radio. The frequency response of the radio is discussed in Chapter 8. The current implementation uses a header symbol at the beginning of every packet. The header contains training data on every subcarrier. This technique, which is widely used in WLAN systems, is referred as a block-type pilot structure. The training data is used to estimate the channel response. This estimated channel response is then used to equalize the received data signal. The adaptive equalization algorithm used is the frequency domain proportional equalization which was described in Chapter 2 .

3.2.5. Data Demapping

In this module the output of the FFT is mapped into data bits using the signal constellation which was described in Section 3.1.4. The complex values obtained at the output of the FFT module represent the in-phase (I) and quadrature (Q) phase components. The corresponding point in the signal constellation is used to obtain the demapped bits. The demapping process involves comparing the received symbol with decision thresholds. The decision thresholds were selected on the basis of maximum likelihood estimation. Since the current design uses 64-QAM data mapping, the 64 samples obtained at the end of OFDM demodulation transform into 48 bytes at the end of this module.

3.2.6. Deinterleaving

The structure of the deinterleaver is similar to that of the interleaver. The same 8x8 matrix structure, discussed in Section 3.1.3, used in interleaving is used to realign the adjacent bits.

3.2.7. Decoder

There are two main decoding algorithms which are used with convolutional encoding. They are sequential decoding and Viterbi decoding. Sequential decoding is better suited for convolutional codes with longer constraint length. However this type of decoding has variable decoding time. In the current implementation the Viterbi algorithm has been used to decode the bits. The Viterbi decoder is a maximum likelihood (ML) decoding procedure for convolutional codes. Further there are two ways to implement Viterbi algorithm viz. hard decision and soft decision. The current implementation uses Viterbi decoder in hard decision format. For more details about the operation of a Viterbi decoder, refer to [24]. As mentioned in Section 3.1.2, the channel coder used in the current implementation is (1/2, 3). Thus, the output of the decoder will have half the number of bits as the input which is 24 bytes in the current system.

3.2.8. Descrambler

Once the data bits have been decoded they have to be descrambled to obtain the raw data bits. The equation used for descrambler is same as the one used for scrambling:

$$D(x) = x^7 + x^4 + 1 \qquad \textbf{Equation 3-6}$$

where

D(x) = Descrambling equation.

Figure 3-13 shows the translation of received OFDM symbols into raw data bits. As seen with the modulator, the receiver structure also uses a series of buffers. These banks aid in real-time and continuous reception of OFDM signal. The details on the receive buffers are given in Appendix D.

As seen in Figure 3-13, in the current design, 320 samples of the received audio band OFDM symbol are modified into 24 bytes of data to be transmitted from the serial interface. The details of the software implementation of the demodulator modules are given in Chapter 7.

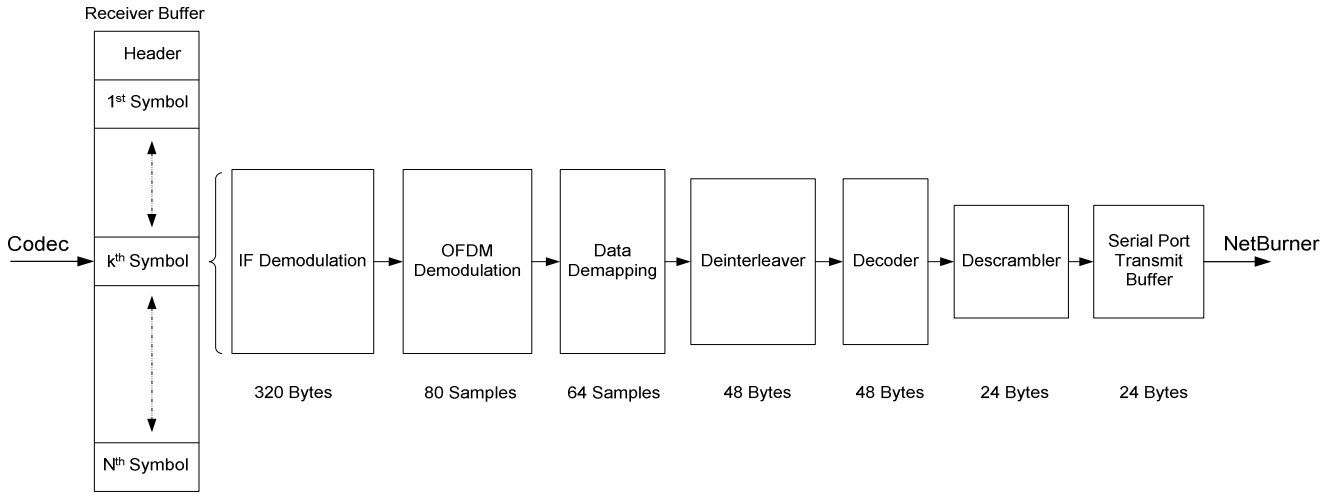

Figure 3-13: Translation of OFDM symbol into individual data bits.

4. SYSTEM ARCHITECTURE

As described in Chapter 3, the modem design can be demarcated into two parts. The first part deals with the modular construction of the modem while the second part deals with its system design. System design refers to the interfaces of the modem and the signal processing and packaging of the data bits. Section 4.1 gives an overview of the system architecture. In Section 4.3 the implementation of the physical layer has been discussed. In addition to the ability to modulate and demodulate data, the modem has to perform a number of functions, like access control, which ensure harmonious operation between the interfaced devices. Such issues have been discussed in Section 4.3.1.

4.1. System Overview

Figure 4-1 depicts a typical configuration of a system in which the modems are used. As shown in the figure, Data Terminal Equipment (DTE) 1 is interfaced with Modem 1 via an RJ-45 connection. Modem 1 is, in turn, connected to a radio [25]. Similarly Data Terminal Equipment (DTE) 2 is interfaced with Modem 2 which is also connected to a radio. The communication between the terminal and the modem is carried out using Ethernet packets. The communication is directed between the modem and the terminal interfaced with it using the IP addresses of the respective entities. That is to say that all the packets, which are to be transmitted by the terminal, are sent to the IP address of the modem and similarly, all the packets which are received by the modem are sent to the IP address of the connected terminal. The purpose of this setup is to ensure that the applications are not required to keep a track of the IP addresses of other terminals in the system. There are two ways of assigning IP addresses. One approach is to code the IP address into the modems. This is referred to as static IP allocation. Another approach, which is more flexible, is to dynamically assign IP addresses using the Dynamic Host Routing Protocol (DHCP). For dynamic IP assignment to work, the terminal interfaced with the modem must exhibit DHCP capabilities. The modems communicate with each other using radios. Although Figure 4-1 shows a configuration with two modems having a single bidirectional radio link, the design concept is also applicable to multi-modem environments.

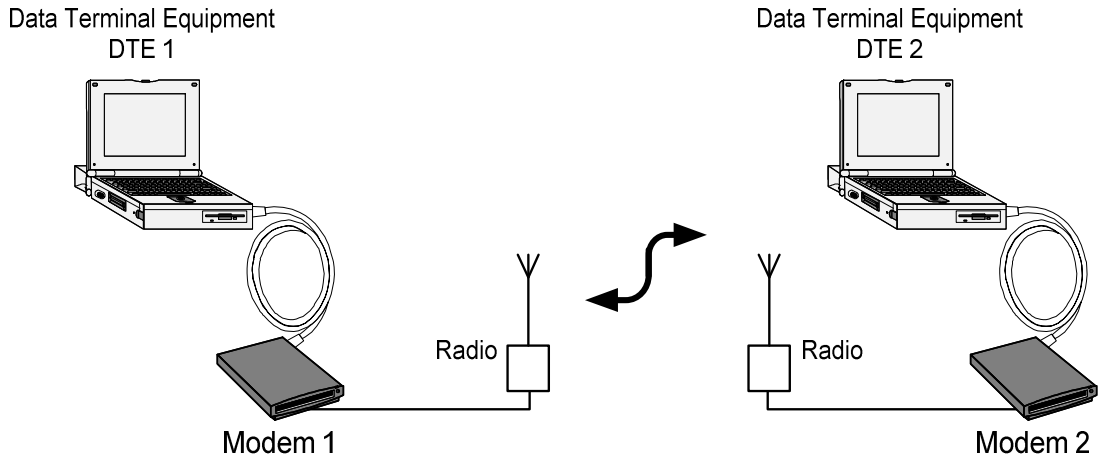

Figure 4-1: Typical Modem setup

4.2. System Interfaces

Figure 4-2 displays the different interfaces of the modem. There are two main external interfaces at each modem. The first interface, *Interface I*, is a standard Ethernet interface between the modem and data terminal equipment (DTE) for example, a laptop. It is also possible for one or more DTEs to be connected with the modem via the RJ-45 connection with the use of appropriate network device like a hub or switch. The objective of this interface is to facilitate the communication of data using standard protocols like TCP/IP or UDP/IP. *Interface I* will be discussed in detail in Section 4.2.1. The second external interface, *Interface IV*, is between the modem and the radio. The main use of this interface is to modify the audio band OFDM signal, described in Chapter 2, so as to ensure compatibility with the radio. It also performs ancillary functions like assertion and deassertion of Push to Talk (PTT). These functionalities are explained in detail in Section 4.2.4. In addition to the two external interfaces, there are two internal interfaces which connect the three components of the modem viz; NetBurner card, EVM and daughter card, introduced in Chapter 3. The NetBurner card which houses the Ethernet stack is connected to the EVM via a standard RS-232 serial connection. This interface, *Interface II*, is discussed in Section 4.2.2. The EVM is further connected to the radio via the daughter card. The interfacing takes place using the codec on the EVM. The details of this interface are given in Section 4.2.3.

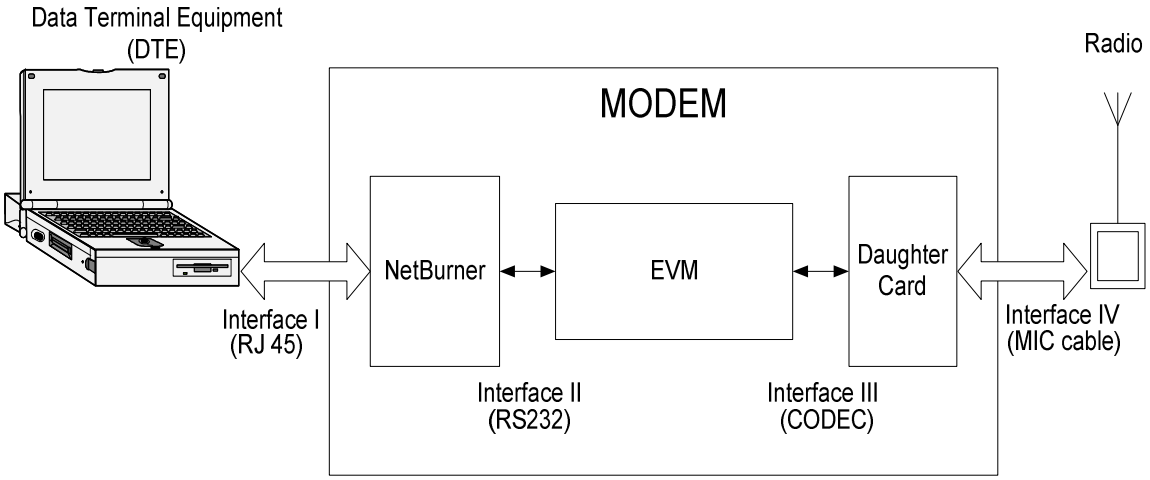

Figure 4-2: Modem Interfaces

4.2.1. *Interface I*: NetBurner and DTE

Interface I is a standard, 10BaseT Ethernet interface. The DTE equipment is connected to the NetBurner card using a standard RJ-45 connection. The NetBurner implements the Ethernet protocol that aids in extracting and packaging of the data. The NetBurner card accepts the Ethernet packets which are addressed to the modem. The communication is directed on the basis of IP address of the devices. There exists a difference in the data rate at two ends of the modem, i.e between Ethernet channel which runs at typical rate of 10 Mbps and the VHF NBFM radio link which supports data rates on the order of 10 Kbps. In order to compensate for this discrepancy in data rates, the NetBurner buffers packets of data. Buffering of Ethernet packets takes place for communications in both directions i.e. while receiving packets from the DTE and while sending packets to DTE.

One of the software implementation issues at this interface is the size of buffer to be used in the NetBurner. The appropriate size can only be determined after considering the nature of traffic on the Ethernet, the size of the memory available in the hardware that can be used as a buffer and the throughput achievable on radio link. Although it makes sense to try to send all the packets received by the modem over the radio link, it is possible that due to the large discrepancy in data rates, this approach leads into a never

ending transmission loop. To elaborate on this issue, assume that the data throughput for the radio link is 8 Kbps as shown in Figure 4-3. Next, consider that standard UDP/IP packets are sent by the DTE to the modem and the buffer size is 100 packets. This means that the NetBurner can buffer a maximum of 100 UDP/IP packets at any given instant. The maximum size for UDP/IP packets, as defined in RFC standard [8] is 1472 bytes. Assume that the size of each UDP packet in the buffer is 500 bytes which translates into 400 Kbits of data present in the NetBurner at any given instant. Now for the given throughput of 8 Kbps over the radio link, it will take a minimum of 50 seconds for the modem to empty the buffer. This represents the classical queuing theory problem in which the input rate is more than output rate and hence requires a queue of infinite length to ensure no loss of information. However an infinite queue will lead to a very large latency. Thus, a trade off is required to be made between the permissible latency and the queue size.

The nature of packet traffic is also important. Several packets may have a retransmit frequency. Packet retransmission is generally associated with reliable internet protocols like TCP/IP [26] which require all transmissions to be acknowledged. Now suppose that the retransmit frequency for the current example is 10 seconds. Since it takes 50 seconds for all of the messages to empty out of the buffer, this means that after 10 seconds the sender would start retransmitting, adding duplicate messages to the buffer. In this case transmitting both the packets is waste of bandwidth resources. This problem can be avoided by ensuring that the application is aware of constraints of the air channel and either a) doesn't exceed the channel capacity or b) includes application-level handshaking to avoid the problem.

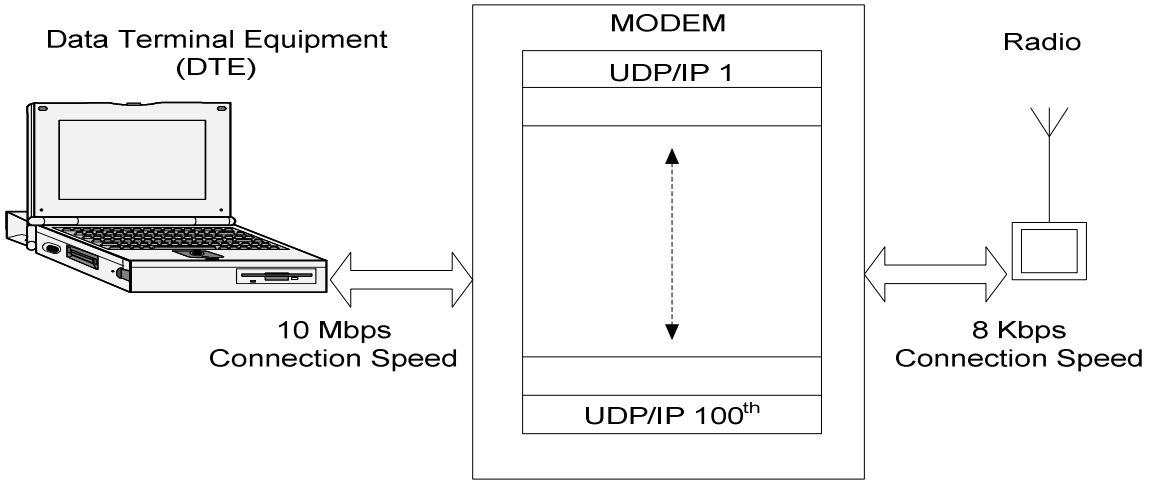

Figure 4-3: Modem buffer size.

4.2.2. *Interface II*: NetBurner and EVM

The NetBurner card and the EVM are connected using an RS-232 link. The communication between the NetBurner and the EVM consists of data signals and flow control signals. The data signals refer to the information bits which are transmitted between two modems. The flow control signals are used to regulate the flow of data between the EVM and the NetBurner. There are two ways of implementing flow control viz. hardware flow control and software flow control. The hardware flow control mechanism consists of use of RS-232 interfacing pins. The software flow control involves exchanging data patterns (special ASCII characters) to regulate data exchange. The current system implements a simplified version of software flow control. The details of the control signal implementation are given in Chapter 5. The flow control signals are interchangeably referred to as handshaking signals or handshaking codes in this thesis.

The NetBurner transmits the Internet protocol packets over the serial port using *Interface II* to the EVM. The EVM then modulates these raw data bits using the modules described in Chapter 3. The EVM also demodulates the audio band OFDM symbol into raw data bits and transmits it over *Interface II* to the NetBurner card for repackaging into standard Ethernet protocol packets. The packaging and repackaging of Internet packets are explored in more details Section 4.3 and Chapter 5. This notion of packaging and repackaging of data implies that the data format transmitted between the radios need not be identical to the data format received via the Ethernet port. Indeed, significant gains in

efficiency can be obtained if the received IP packets are reorganized, or packaged, prior to transmission (which, of course, requires repackaging to negate the effects of the reorganization upon reception). The details of these two actions are a part of the transmission and receive modes/states of the modem. These details will be enunciated in Chapter 6.

4.2.3. *Interface III*: EVM and Daughter Card

The radios used for FM transmission have certain requirements with respect to the input and output signals so as to ensure optimal performance of the system. The daughter card ensures that the signals at the output of the EVM are compatible with the radio. There are three signals routed between the EVM and radios via the daughter card. The first signal is the Push-To-Talk (PTT) signal. The radio is capable of communication in half duplex mode only. The PTT signal is used for switching the radio between the transmit mode and receive mode. The assertion of PTT signal switches the radio into transmit mode while the deassertion shifts it back to the default receive mode. The implementation of the PTT signal is discussed in detail in the Appendix A. The next interfacing signal is between the audio output on the EVM and the microphone input of the radio via daughter card. As described in Chapter 2, the strength of the modulating signal influences the bandwidth of the FM signal. There exists an optimum level for input signal at the microphone terminal of the radio to maximize the efficiency of the FM transmission and avoid saturation. The audio output of the EVM is adjusted so as to meet this requirement by use of appropriate circuitry as described in Appendix I. The final interfacing signal of *Interface III* is between the speaker out of the radio and the audio input of the EVM. As this is a high-level audio output, meant to drive a loudspeaker, and may need to be modified to compensate for drive, impedance or DC offset..

4.2.4. *Interface IV*: Daughter Card and Radio

The same sets of signals at *Interface III* are repeated at *Interface IV*. The media between the radio and the daughter card varies depending upon the radio used. It can be a simple audio jack or a modified RJ-45 connector.

4.3. Physical Layer and Data link Layer Implementation

The standard networking model, Open Systems Interconnection (OSI) defines seven layers of operations [27]. The seven layers function at different levels of abstraction. The OSI reference model is shown in Figure 4-4.

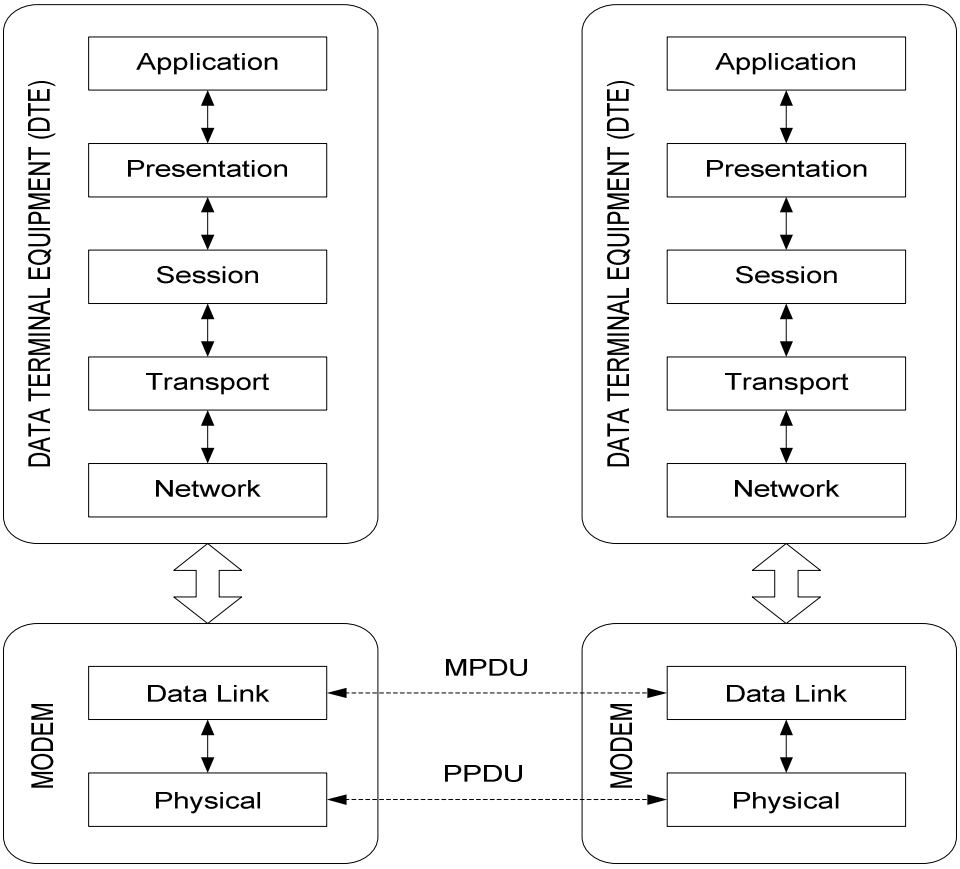

Figure 4-4: OSI reference model.

The structure and functions of the application, presentation, session, transport and network layer are beyond the scope of this thesis. The DTE is responsible for packaging the application data into standard network layer protocols like TCP/IP or UDP/IP. The modem acts like a layer two device and therefore deals only with the implementation of the physical and data link layers. The details of the data link layer are given in Section 4.3.1 while the details of the physical link layer are given in Section 4.3.4.

4.3.1. Data Link Layer design

The data link layer serves as an interface between the network layer and physical layer. It is further subdivided into a Medium Access Control (MAC) sub-layer and a Logical Link

Control (LLC) sub-layer. In the current modem implementation the functions of the LLC sub-layer have been incorporated within the MAC sub-layer. There are a number of functions performed by the MAC layer. The first function is to provide reliable data delivery to the upper layers. This is achieved by the use of error correction mechanisms like cyclical redundancy checks (CRCs) and checksums. The data from the upper layers is repackaged into frames called MAC layer protocol data units (MPDUs). Each MPDU may extend over a number of upper layer packets. For example, suppose that the DTE transmits UDP/IP packets to the modem as shown in Figure 4-5. The NetBurner card in the modem buffers these packets. Depending upon the amount of data which can be transmitted, a single MPDU may be comprised of multiple buffered UDP/IP packets. It is also possible for the MAC layer to split a single UDP/IP packet over multiple MPDUs.

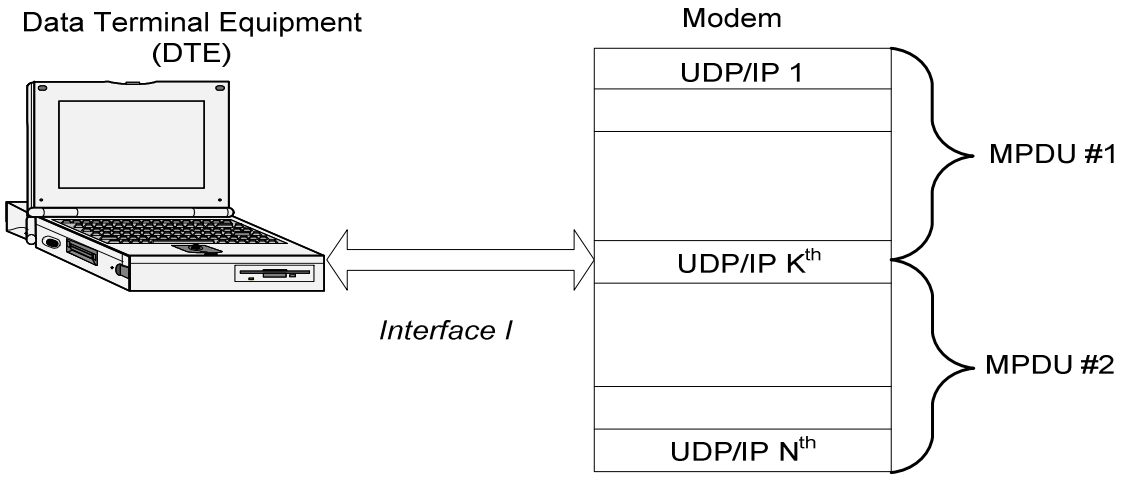

Figure 4-5: Formation of MPDU in NetBurner

The second function of the MAC layer is to address the issue of fair access to the medium. In multiple modem environments it is possible that a number of modems will have data to transmit at any given instant. If all the modems start transmitting data, then all transmissions will get corrupted as there is only one wireless channel. To avoid this situation there is a need for some control mechanism. The modem should be capable of sensing the channel before transmitting any signal on it. At the same time, in an event of contention there should be some mechanism to resolve it. In case of peer-to-peer networks, it is important to ensure that at a given instant no two modems start transmitting simultaneously so as to avoid collisions. There are a number of MAC layer

protocols which make provisions to prevent and at the same time detect such collisions. The most frequently used implementations are Carrier Sense Multiple Access with Collision Detection (CSMA/CD) which is described in Section 4.3.2 and Carrier Sense Multiple Access with Collision Avoidance (CSMA/CA) which is described in Section 4.3.3 [14].

4.3.2. CSMA/CD

This medium access control technique is widely used in the IEEE 802.3x Ethernet standard. A single Ethernet network may be used to provide access to a group of attached terminals. All these terminals are said to form a collision domain. To control which terminals should be allowed to transmit at a given instant, a protocol is needed. In the absence of this protocol all the terminals which have data to be sent will start transmitting, resulting in loss of data. As the name suggests, in carrier sense multiple access protocols all the terminals have to listen to the channel before they start transmitting. If they sense a transmission on the desired channel they will not transmit their data. Instead they will wait for the channel to be inactive. However this technique alone cannot guarantee an error free transmission. This is because if two terminals start transmitting near simultaneously, then they could both see an idle channel and simultaneously conclude that no other terminal is transmitting. This will result in collision and eventually the corrupted transmission will have to be discarded.

In order to detect that a collision has occurred a second technique known as collision detection is used in conjunction with CSMA. In this method every terminal monitors the physical medium during its own transmission. If it senses a collision it immediately stops transmitting and sends a jamming sequence. The purpose of the jamming sequence is to ensure that the remaining terminals will discard the frame. In the case of Ethernet, the collision detection is implemented by observing the current levels on the cable medium. All the parameters for the cable medium are predefined such that the limits on signal strength are known. This knowledge can be used for detecting collisions. However if the medium is wireless then it becomes impossible to detect collisions. In such situation a different scheme is implemented.

4.3.3. CSMA/CA

This medium access control is implemented in IEEE 802.11x wireless LAN standard [14] [28]. A CSMA/CA protocol has been designed to reduce the collision probability between multiple terminals accessing the same medium, at the point where collision will most likely occur. Just after the medium becomes idle, following a busy medium (as detected by the carrier sensing), is when the highest probability of collisions exists. This is because multiple terminals might have been waiting to transmit. This means that once the channel goes idle many transmitters may wish to send the data they've been holding while waiting for the channel to clear. This situation necessitates the use of a random backoff procedure to resolve the medium contention issues. The random backoff requires that once the channel clears, each transmitter wait an additional, randomly selected, backoff time. This improves the possibility that that no contention takes place between the terminals.

4.3.4. Physical Layer (PHY) design

The physical layer acts as an interface between the data link layer and the channel. The channel in this context refers to the radio link used by the radios. The PHY layer has to provide three levels of functionality. First, the PHY layer provides a data exchange mechanism between the upper layers and PHY layer. The MAC layer transmits MPDUs to the PHY layer.

Depending upon a number of physical constraints, like requirements for synchronization and equalization, which were described in Chapter 2, it may not be advisable to transmit the entire MPDU. For example, in block type pilot equalization described in Chapter 2, the channel frequency response is calculated over the training symbol. The remaining symbols are equalized using this channel response measurement. There is an inherent assumption that the channel remains invariant over the duration of transmission. In such scenarios it is useful to periodically insert training symbols to take in account the variations in the channel.

For the reasons discussed above, each MPDU is broken down into a number of PHY layer protocol data units (PPDUs). There are two ways of forming a PPDU; one will be fixed length while other one will be variable length. The main reason for using variable length PPDUs is to avoid the wasting transmission bandwidth which is at a premium. However this requires some mechanism of communicating the size of the PPDU, which adds data overhead. The second approach of having a fixed length for PPDU is easier to implement. As shown in the Figure 4-6, each PPDU consists of a header which is the training sequence used in equalization and data field.

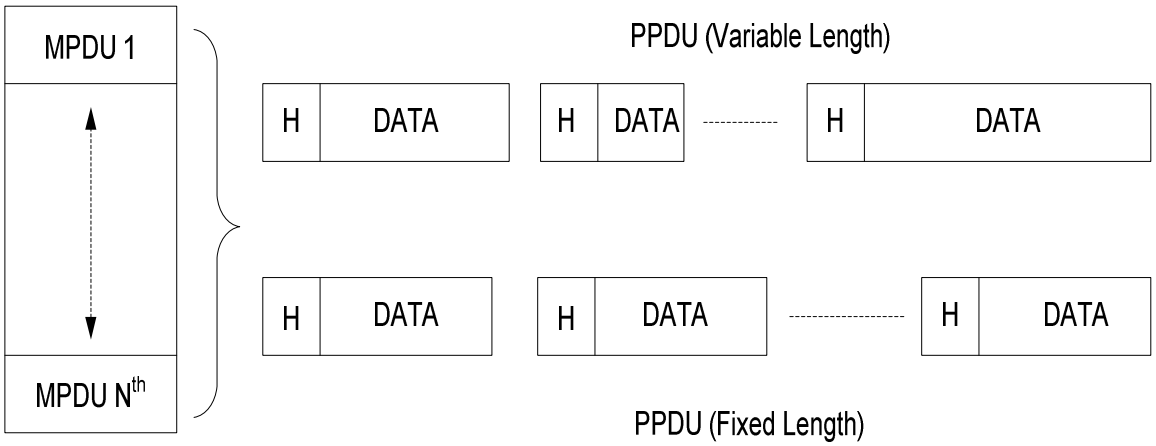

Figure 4-6: Formation of a PPDU from MPDUs.

The second functionality of the PHY layer deals with the modulation and demodulation of the data. This includes the modules described in Chapter 3. The data payload shown in Figure 4-6 will be audio band OFDM symbols generated by the modulator.

The third function of the PHY layer is to provide a carrier sense mechanism to the upper MAC layer. The carrier sensing mechanism was discussed in detail in Sections 4.3.2 and 4.3.3 .

5. SYSTEM IMPLEMENTATION

Chapters 3 and 4 described the construction and system design of a modem which creates an interface between data terminal equipment (DTE) and a land-mobile radio (LMR). In this chapter, the design and implementation is further narrowed down with respect to the specific DREAMS application. The DREAMS application and software was introduced in Chapter 1. The nature of this software influences various parameters like the size of buffer on the NetBurner and back off time in the CSMA/CA algorithm, all of which were articulated in Chapter 4. In addition to dealing with specific software applications on the DTE, the implemented system assumes the use of an NBFM analog radio working in half duplex mode for the rest of the discussions. Similar principles are applicable to other analog radio channels.

5.1. System Overview: DREAMS and the OFDM Modem

The DREAMS software was primarily designed to facilitate interaction between a paramedic working in a mobile ambulance and a physician stationed at a hospital or a base camp. The paramedic station is capable of monitoring a number of important physiological signs which can be of assistance to the physician for correct diagnosis. In order to transfer this information, a radio link can be chosen amongst the available communication technologies like cell phones, satellites and, with the modem, land mobile radio. A detailed description was given in Chapter 1.

Figure 5-1 shows a typical configuration of such a system. As seen in the figure, Terminal 1 is interfaced with Modem 1 via an RJ-45 connection. Modem 1 is, in turn, connected to the land mobile radio. Similarly Terminal 2 is interfaced with Modem 2 which is also connected to a radio. The communications between the terminal and the modem and vice-versa is carried out using UDP/IP packets.

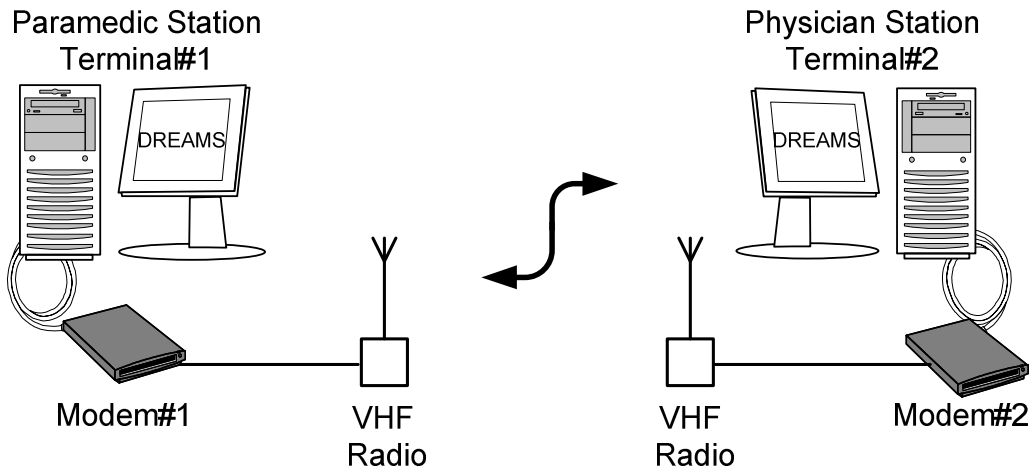

Figure 5-1: DREAMS system setup

The choice of the UDP/IP protocol was a project requirement which was established to ensure interoperability with the DREAMS software. The DREAMS software used the UDP/IP protocol for all data transfers. Furthermore, in the current implementation, communications is restricted between the modem and the terminal interfaced with it. That is to say that all the packets which are to be transmitted by the terminal are sent to the IP address of the modem and similarly all the packets which are received by the modem are sent to the IP address of the connected terminal. This was also a project requirement since the DREAMS application did not to keep a track of the IP addresses of other terminals in the system.

Each modem has a static IP address as the terminals used in DREAMS system do not support the DHCP protocol [29]. The IP addresses of the interfaced terminals are also hard coded in the modems for the current configuration. The modem software is independent of the type of terminal being interfaced, that is to say that any modem can be interfaced with the Paramedic or Physician station. The modem identifies each station only on the basis of the IP address; the nature of data transmitted from either terminal does not require any change in the design of the software.

All that is required to remove the above restrictions is to implement a more complete protocol stack in the NetBurner.

The DREAMS software, as mentioned previously, is capable of transmitting a range of physiological and communications (audio, video and text) data. Each type of data source can be considered as a separate application. All the applications are uniquely identified by the UDP port numbers they use and by the statistics of the data they generate in terms of size and frequency. Identification of the data source is required by the DREAMS so as to prioritize the data generated. For example, transmitting ECG information will be of a greater importance than the transmission of any telemetry information. The prioritization of data is accomplished in the DREAMS software itself, and is beyond the scope of this thesis as it is completely transparent to the modems. The modems communicate with each other using the land mobile radio link which in the current implementation, was a pair of Motorola XTS 5000 VHF radios operating in their analog mode.

5.2. System Interface:

This section gives the detailed design and implementation for the different interfaces in the modem. These interfaces were introduced in Chapter 4. Each of these interfaces have been tailored in accordance with the requirements and constraints of the DREAMS application and the land mobile radio.

5.2.1. *Interface I*: NetBurner and DREAMS

This is the standard Ethernet interface. An overview of this interface was given in Chapter 4. The DREAMS terminal and the modem exchange information in the form of UDP/IP packets. Figure 5-2 shows the contents of a standard UDP header [8].

```
 0      7 8     15 16    23 24    31
+--------+--------+--------+--------+
|     Source      |   Destination   |
|      Port       |      Port       |
+--------+--------+--------+--------+
|                 |                 |
|     Length      |    Checksum     |
+--------+--------+--------+--------+
|
|          data octets ...
+---------------- ...
```

Figure 5-2: User Datagram (UDP) header format.

As seen in the figure, the UDP header contains source port and destination port address fields. These addresses are different from the IP addresses which are used to direct packets between the modem and the DREAMS terminals. The length field in the UDP header indicates the size of the data payload while the checksum is used to ensure that no errors have occurred during the transmission.

It was mentioned in Section 5.1 that there are number of physiological and telemetry signals which are exchanged between the physician and paramedic terminals, and there is need to uniquely identify the data types. The source and destination ports numbers serve this purpose. For example any traffic on source port number 4200 indicates data from the navigation server and any traffic on source port number 4100 indicates ECG server data. Table 1-2 provides a more comprehensive list of the services and the associated port numbers.

The modem, although oblivious to the nature of the data, is required to accept UDP packets only in a certain range of port addresses. The reason for this is that the DREAMS system requires addresses in certain range (port numbers above 6000) for communicating with different modules which are not a part of the modem. For reasons of backward compatibility, no changes were made in DREAMS software. Instead, the modem receives and transmits traffic on port numbers between 3000 and 6000 and ignores traffic on all other ports, even if the traffic is sent to the modem's IP address.

It is important to mention that the modem appears completely transparent to the DREAMS system. This is to say that the integrity of the UDP packets is guaranteed, meaning that a UDP packet is either delivered correctly, or it is dropped completely. Any acknowledgements required are done by the DREAMS software.

The next important interface parameter is the buffer size. The NetBurner uses a buffer size of 200 UDP/IP packets. Each packet can vary in length up to the maximum permissible size of 1472 bytes as defined in the standard. Choosing the number of packets to be buffered is a tradeoff between the throughput achievable over the radio link and the duration of the transmission or receive time slots for the modem. The LMR works in half duplex mode, which means that the modem can be either in the transmit mode or receive mode at any given instant. A single transmission or receive slot lasts for duration of not more than 6 seconds (a value deemed to be a reasonable tradeoff between average data rate and channel utilization). The details on the make up and duration of the slots will be given Chapter 6. The on-air throughput for the current modem stands at about 3000 bits per second. Figure 5-3 shows the details for Interface *I*. The throughput calculation is based on the factors like the makeup of the transmission slot, data rate achievable over the radio link all of which are described in Chapters 6, 7 and 8.

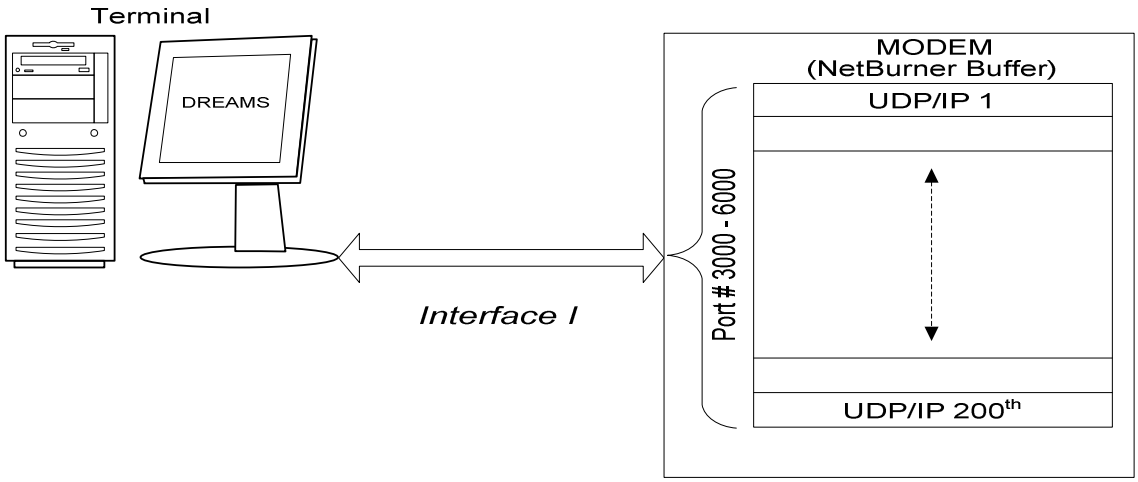

Figure 5-3: A desktop which runs DREAMS application is connected to the modem using RJ 45 connection (Interface I.).

From the above analysis it can be derived that the maximum number of bytes that can be transmitted in a single slot which has a maximum duration of 6 seconds and throughput of 3 kbps, is about 1800 bytes. Thus the buffer is selected such that at any given instant it should be able to house a minimum of 1800 bytes. Given the overhead associated with each UDP message if each UDP/IP had just 1 byte as the payload, then it would take about 80 UDP/IP packets to fill up a single slot. Thus, the selected number 200 satisfies this constraint. For a more detailed analysis on implementation of buffers, please refer to reference [30].

5.2.2. *Interface II*: NetBurner and EVM

This is a standard RS-232 interface. The signals exchanged between the NetBurner and the EVM can be classified into two types viz. data signals and control signals as discussed previously in Chapter 4. The control signals are required to ensure proper exchange of data between the EVM and NetBurner. This section elaborates the implementation of such a control signaling scheme.

As mentioned in Section 5.1, the modems have three distinct operating modes as shown in the state diagram of Figure 5-4, the "listen" mode (State 0), the "receive" mode (State 1) and the "transmission" mode (State 2). Due to the half duplex nature of radio link, the modem never receives and transmits at same instant. The listen state is a default state for the modem. This is to say that the modem is always listening for a transmission on the radio link/channel. If a signal is received, it is demodulated using the modules described in Chapter 3. The demodulated data bits are then sent to the NetBurner. This process is augmented with the exchange of suitable handshaking signals/codes. The modem will enter into transmission mode only upon the assertion of the two conditions, first there must be no activity on the channel and second there must be data available for transmission. The channel idleness is confirmed by the implementation of the MAC layer protocol to be discussed in Section 5.3.1. In order to confirm availability of data, handshaking/flow control signals are needed.

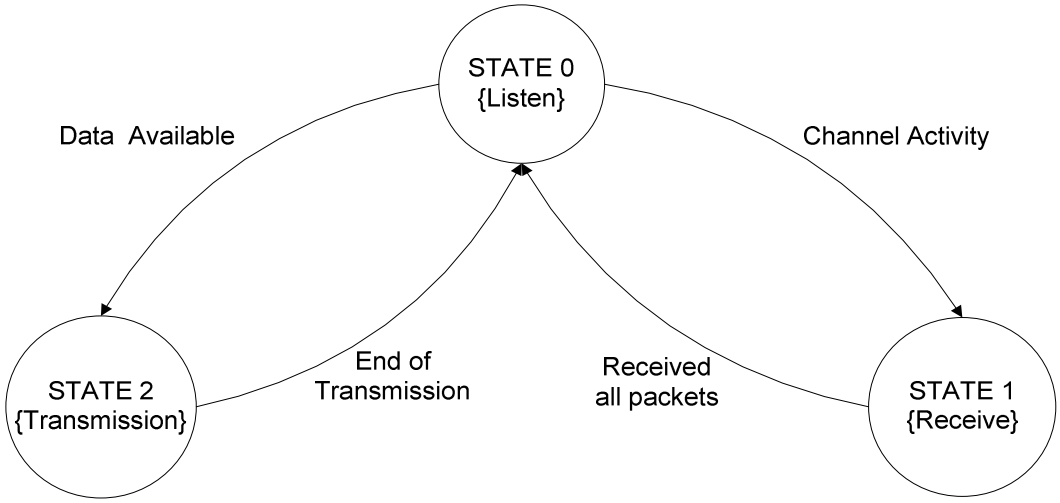

Figure 5-4: State diagram for the modem.

The handshaking codes can be separated into two groups: Transmission mode handshaking codes and Receive mode handshaking codes. Each of these control signals is a single one byte ASCII character which is transmitted over the serial port. This type of implementation can be considered as a variation of software flow control as mentioned in Chapter 4. The transmission flow control comprises of two ASCII characters 'a' and 's'. The receive flow control also consists of two ASCII characters 'R' and 'Q'. Whenever the radio channel is available for transmission, the EVM sends the character 'a' over the RS-232 link to the NetBurner. This character indicates that a transmission slot is available and effectively queries the NetBurner about the availability of data. This analogous to the Data Terminal Ready (DTR) hardware handshaking signal which is used in the RS-232 protocol. If the NetBurner has data, it signals back to EVM to that effect. The one byte binary character it sends in response represents information about the size of the data available for transmission. For more details refer to Chapter 6. Similarly when the EVM has received any data over the wireless link it notifies the NetBurner of the incoming transmission by sending the character 'R' over the serial port. This signal is analogous to the Request to Send (RTS) hardware flow control signal defined by the RS 232 protocol. If the NetBurner is ready to receive the transmission from the EVM, it sends the character 'Q' on the serial port. This can be interpreted as a Clear to Send (CTS) from the NetBurner to the EVM.

5.3. Physical (PHY) Layer and Medium Access Control (MAC) Layer Implementation

The functions of the physical layer and medium access layer were discussed in Chapter 4. In this section the implementation of the physical and MAC layer is described with context of the DREAMS application. The performance of the modem can be improved if certain characteristics of the DREAMS software are exploited. The modifications made will be discussed in Sections 5.3.1 and 5.3.2.

5.3.1. MAC Layer Implementation

As described in Chapter 4, there are two important functions for the MAC layer. The first is to ensure reliable data transfer; the second is to guarantee fair access to the channel resources. The interfaced terminals communicate using UDP/IP packets which are buffered by the NetBurner as described in Section 5.2.1. The buffered packets are used to form an MPDU packet. The packets are processed according to last in first out (LIFO) basis. The NetBurner further maintains a record of the number and size of UDP/IP packets it receives. The design and implementation of the buffer is beyond the scope of this thesis and more details on the process are available in reference [30]. There exists a maximum limit on the size of the MPDU. This limit is governed by the maximum permissible transmission slot time and data throughput achievable. Accordingly it is possible for the MPDU to contain more than one UDP/IP packet. Further it is possible that a single UDP/IP is split over two consecutive MPDUs. Reliability is achieved by appending parity bits at regular intervals. For more details on the fragmentation and defragmentation of UDP/IP packets to form an MPDU and to provide error detection capabilities refer to reference [30].

In order to preserve the bidirectional nature of the half-duplex link, it is important to ensure that every terminal gets an opportunity to transmit data. The modem currently implements a version of CSMA/CA, described in Chapter 4, to ensure fair access and avoid collisions. From Section 5.2.2, it was observed that in the default state the modem always monitors the channel for any activity. At the same time the EVM is periodically querying the NetBurner for any data that needs to be transmitted. The NetBurner

indicates the presence of data through exchange of appropriate handshaking codes. Each modem listens to the channel before beginning any transmission. Once the data availability is ascertained, the EVM implements a random backoff algorithm. This is to say that it will continue to monitor the channel for a random amount of time before occupying the channel. This random backoff is similar to the one used in CSMA/CD. However in CSMA/CD the random backoff is implemented after any collision has been detected. In case of a wireless, half duplex, medium it is not possible to detect collisions and hence the random backoff implemented serves as a collision avoidance technique.

At the end of the random backoff, the modem starts transmitting. If the modem senses any activity on the channel during the backoff period it will abandon the transmission of the scheduled data. This implementation will be explained in the context of the transmission and receive slots which will be described in Chapter 6. Collision avoidance is achieved as the probability of collision for the system is highest at the end of the previous transmission. In addition the random backoff is biased so that the station which was transmitting most recently is given a lower priority for transmission in the next available slot. This design for the MAC layer has been influenced by the working of the interfaced DREAMS software. In the DREAMS software, the data traffic occurs in bursts using the UDP protocol. The UDP protocol falls in the family of unreliable networking protocols. For details on unreliable protocols refer to reference [8]. However, certain data transfers might demand reliability. An example of such a service is the patient database. Every field of the database is required to be reliably transmitted. Thus any UDP/IP packet which encapsulates database data has to be acknowledged by transmission of another UDP/IP packet by the receiving DREAMS terminal as a mechanism of enforcing reliability. In absence of the bias on the backoff, it is possible that the received station does not get a chance to transmit an acknowledgement which results in retransmission of the same packet over the channel.

Figure 5-5 shows such a scenario. Part (a) displays the events when no bias exists while part (b) displays the events with bias on random backoff. For this discussion, assume that the applications on Paramedic station (Modem 1) generated UDP/IP packets which are to

be transmitted to the Physician terminal. To achieve this, the packets will first be transmitted to Modem 1 which has a unique IP address. The NetBurner in Modem 1 receives these packets and buffers them in the UDP buffer. Without loss of generality, assume that the total number of bytes in the all packets is less than the maximum that can be transmitted in a single transmission slot. It is important to note that both the modems run asynchronously with each other and that the default state for both these devices is the listening state as seen in Figure 5-4. The EVMs on both the modems are also periodically querying the respective NetBurners for data. In consistence with the assumption about paramedic station made earlier, the NetBurner in Modem 1 signals to the EVM about the availability of data for transmission. Next, the EVM in Modem 1 will transmit the MPDU which has been translated into equivalent PPDUs represented by *P1*, over the wireless link. The EVM in Modem 2, which is functioning in its default listen mode, starts receiving the signal. After handshaking with the EVM, the NetBurner in Modem 2 starts reassembling the UDP packets. It then transmits the UDP/IP packets to the Physician terminal. The applications on the Physician station generate acknowledgements, *ACK 1*, for the received UDP packets.

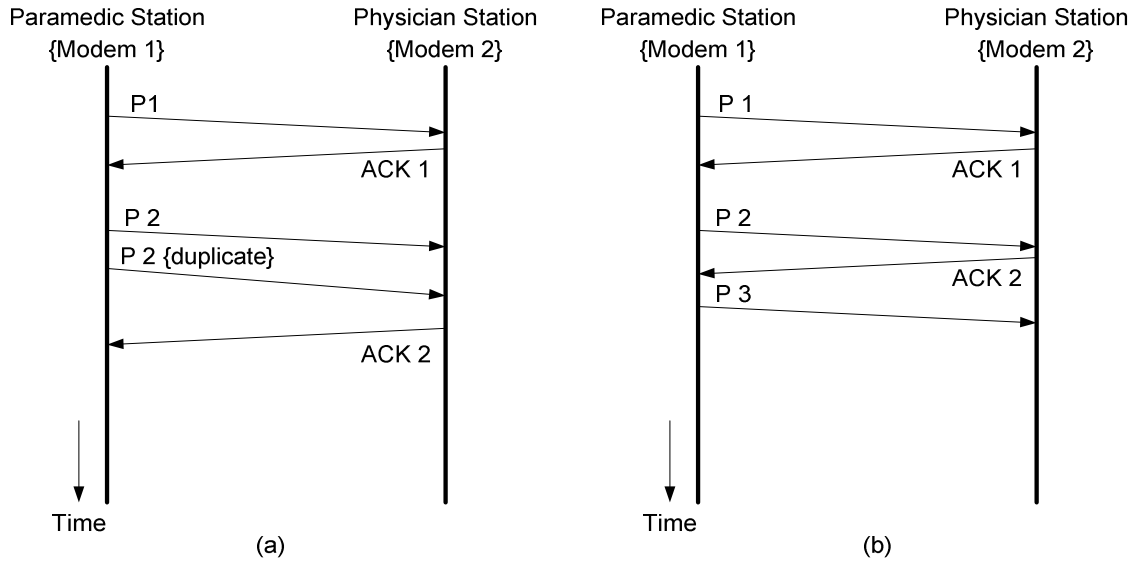

Figure 5-5: Half duplex communication (a) without bias on random back off (b) with bias on random backoff .

Now consider the possibility that Modem 2 gets an opportunity to transmit the acknowledgement. Once this acknowledgement is received before the expiration of

retransmit window, the paramedic station starts sending the next set of UDP/IP packets which are a part of PPDU represented by *P2*. Upon receiving the data, the physician station generates another acknowledgement packet *ACK 2*. However, due to the randomness involved, the paramedic station retransmits P2 at the end of backoff period. Thus packet *P2* transmission is duplicated which wastes bandwidth resources. Another option to resolve this issue would be to modify the retransmit frequency at the paramedic terminal. However even this option does not guarantee the transmission of acknowledgement, it merely delays the retransmission of the duplicate packet.

The bias on the random backoff equates roughly to the Physician station getting a higher priority for next transmission slot. So although both modems may enter into the random backoff algorithm at the same time, one of them will start transmitting a sufficient time ahead of the other one. To generalize the implementation, the modem which transmitted the most recently will be given a lower priority for transmission on the next slot as compared to the modem which was in receive mode. The main motivation for this modification is the nature of interaction between the DREAMS software on paramedic and physician terminals discussed in Chapter 1. Other applications may require a different tradeoff.

5.3.2. Physical Layer Implementation

The functionalities of the physical layer were elucidated in Chapter 4. The transfer of modulated data bits is accomplished using PPDUs. The PPDUs are derived from MPDUs and a single MPDU can be split over single or a multiple PPDUs depending upon its size. The size of each PPDU is fixed to seven symbols. The first symbol is comprised of header data while the subsequent symbols are generated from data bits using the modules described in Chapter 3. The header functions as a training symbol used for equalizing the channel. Figure 5-6 shows the contents of a single PPDU.

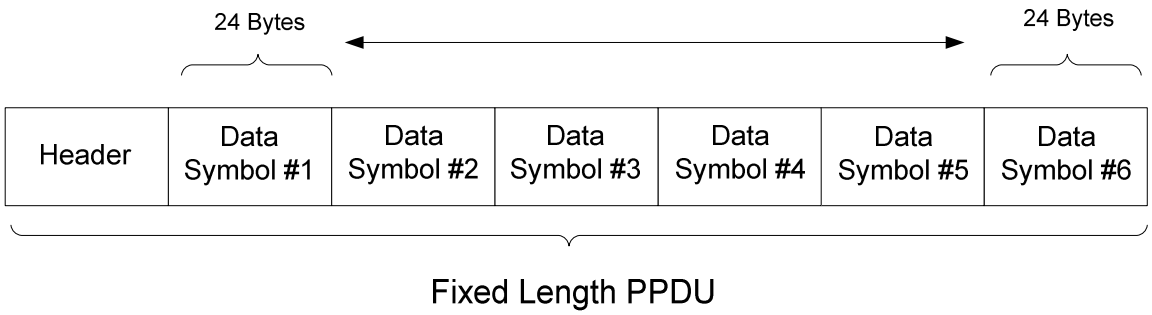

Figure 5-6: Physical layer protocol data unit (PPDU).

Every OFDM data symbol is generated from 24 unprocessed data bytes. For details on the data conditioning and modulation schemes and the process of conversion of 24 data bytes into single baseband OFDM symbol please refer to Chapter 3. This means that every PPDU contains 144 data bytes. These data bits are actually the bits that make up the MPDU. Thus a single MPDU is sliced up into blocks of 144 bytes to form a string of PPDUs. In an event that there are less than 144 bytes available to form a PPDU, zero padding is used. Figure 5-7 shows the process of forming PPDUs.

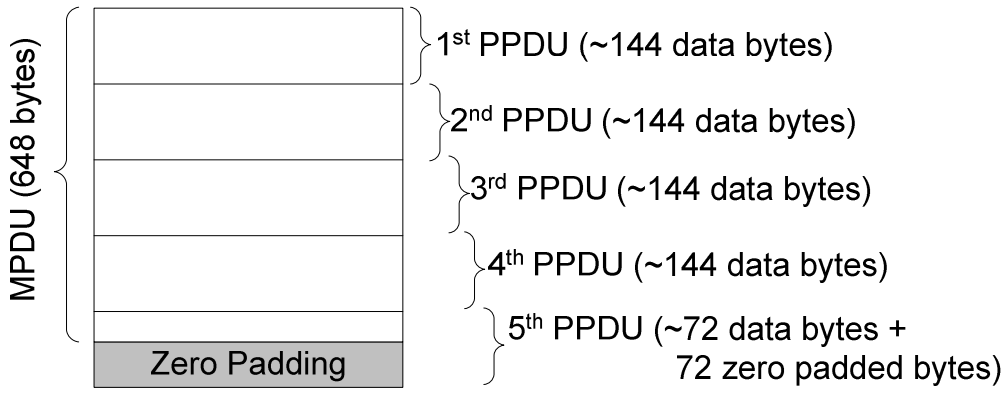

Figure 5-7: Physical Layer Protocol Data unit formation.

Consider that there is a MPDU packet which is made up of 648 bytes. As discussed in Section 5.2.1, the MPDU may consist of one or more UDP/IP packets. During PPDU formation, 144 bytes of the MPDU are converted into six data symbols. As seen in Figure 5-7, for the fifth PPDU only 72 bytes of MPDU are available. Because of the need for a fixed length implementation of a PPDU, 576 zero bits (72 zero bytes) are appended to the MPDU. This makes the length of the last PPDU equal to the required number of symbols.

The maximum number of PPDUs and hence the maximum permissible size of MPDU is dictated by the data rate of the channel. As such, a tradeoff must be made between the maximum number of PPDUs permitted in a single transmission slot and the efficiency of the system. A detailed discussion is presented in Chapter 6.

6. SOFTWARE ARCHITECTURE

Chapter 5 introduced the design and implementation of the modems interfaced with the DREAMS software. This chapter articulates the design of features like the transmit and receive slots and PPDUs. As described before, due to the half duplex nature of a land mobile radio, the modem can be in the transmit mode or the receive mode, but may never simultaneously transmit and receive. In Section 6.2, the transmit slot has been described in detail. Section 6.4 discusses the tradeoffs involved in increasing the duration of transmit slot and minimizing channel occupancy. The makeup of the receive slot has been explained in Section 6.3. As mentioned in Chapter 5, the transmitting and receiving modem are synchronized with each other for the duration of transmit/receive slot. Section 6.5 gives a broad overview of the handshaking codes exchanged during transfer of PPDUs between the modems over the radio channel.

6.1. Working of the system

As described in Chapter 5, the modems will be in the "listen" state by default. Consider a general setup as shown in Figure 6-1. Although the discussion includes a single transmitter and receiver pair, the same concepts can be extended to multi-terminal scenarios. The changes involved will be discussed in Chapter 9.

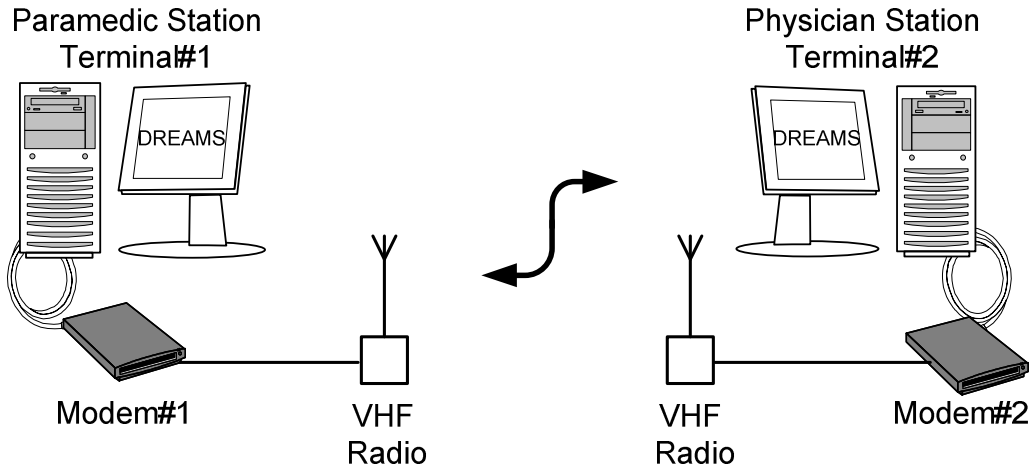

Figure 6-1: Working of System.

Assume that the application on the paramedic terminal sends UDP/IP packets to Modem 1. The NetBurner in Modem 1 buffers these packets. The NetBurner now has data and will respond upon receiving the handshaking codes, which is an appropriate ASCII character as discussed in Chapter 5, from the EVM of Modem 1. Next, the NetBurner calculates the size of a single MPDU in units of PPDUs it contains and communicates that number to the EVM as a part of the handshaking protocol. The purpose of this transfer is explained later in Section 6.4 . Referring to the example of Figure 5-7, a single PPDU consists of six data symbols and one header symbol. The six 24 byte data symbols were formed from 144 bytes which were part of a larger MPDU. There exists a limit, based on the desired maximum amount of time the channel is occupied, to the maximum number of PPDUs which can be transmitted in a single slot. For the current implementation, this limit is 12 PPDUs. A more detailed discussion on this number is available in Section 6.4. Thus, the maximum size of an MPDU is limited to 1724 bytes. A single MPDU can encompass multiple UDP packets. Furthermore, it can also contain a single partial UDP packet. Details on the procedure for the formation of an MPDU are given in reference [30]. The EVM modulates the data bits received from the NetBurner via *Interface II* as described in Chapter 4 to form PPDUs. The PPDUs are then transmitted by the radio. Before starting the transmission, the EVM has to signal the radio, half duplex by design, to shift to transmit mode. This is switching is accomplished by assertion and deassertion of the Push-To-Talk (PTT) line available on the radio. The EVM is interfaced with this feature via *Interface III* and *Interface IV*, as discussed in Chapter 4. These operations constitute the Transmit slot.

Upon the reception of a signal, the EVM on Modem 2, starts demodulating the received PPDUs into data bits using the demodulation modules described in Chapter 3. At the same time, the NetBurner in the receiving modem, is notified of the incoming transmission by use of the handshaking codes described in Chapter 4. The NetBurner starts receiving the data bits over the transmit slot to obtain an entire MPDU. Next it retrieves one or more UDP packets which may be complete or partial. If a partial UDP packet is received, the NetBurner stores the partial UDP in a temporary buffer. For details on this process, please refer to reference [30]. The NetBurner encapsulates each UDP

packet into an Ethernet frame and relays the data to the connected Physician terminal over the RJ-45 connection. These operations constitute the Receive slot.

The summary of protocol packets exchanged is shown in Figure 6-2. A direct one-to-one correspondence can be drawn between most of the constituents of Transmit and Receive slots. The only difference is the operations being performed in the respective time intervals.

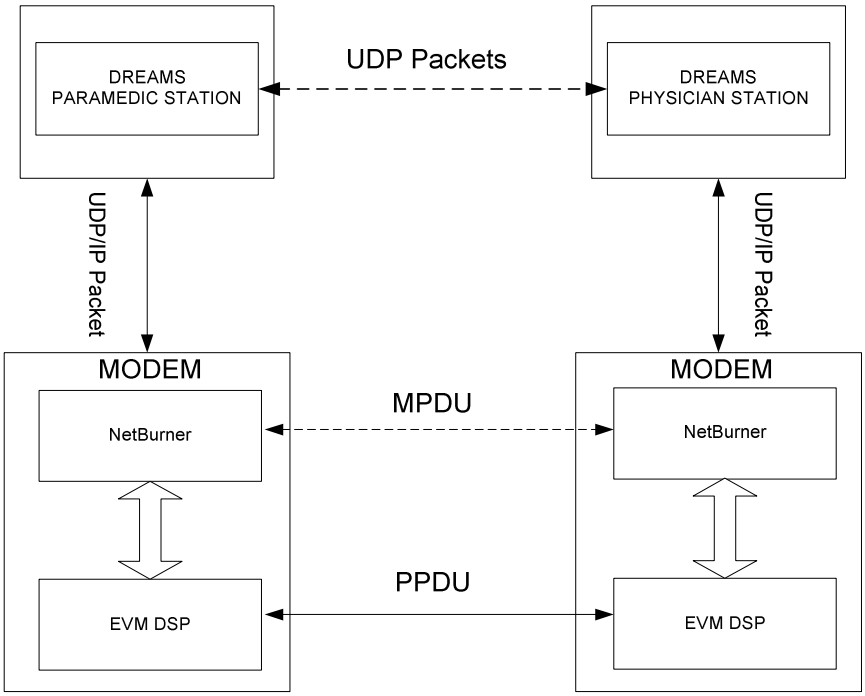

Figure 6-2: Protocol Packets exchanged between different layers.

Also the modem transmitting the PPDU packets and the modem receiving the packets are synchronized for the duration of the transaction. This means that the transmit slot and the receive slot start at near simultaneous instants and exist for almost the same duration.

6.2. Transmit Slot

From the discussions in Section 6.1, it is seen that the EVM of the transmitting modem asserts the PTT signal at the beginning of the transmit slot. The term, transmit slot encompasses the time duration from the instant of assertion of PTT to the deassertion of

PTT. It can be further subdivided into a TX_KEY interval, a PPDU interval, an inter-PPDU Interval, an End of Transmission Interval and a TX_UNKEY interval. Figure 6-3 shows these subdivisions in the context of a transmitted waveform. The duration of each of these sub intervals is given in Table 9-1.

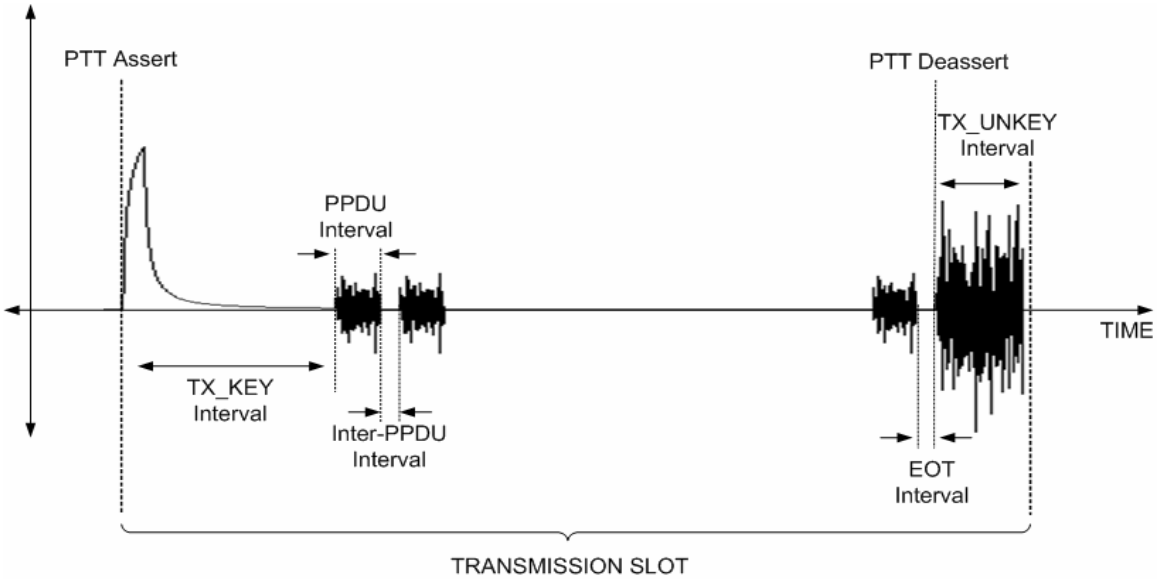

Figure 6-3: Transmit Slot as seen at the input of Modem which is connected to a Motorola XTS 5000 radio.

6.2.1. TX_KEY Interval

Whenever any signal is transmitted, the Push to Talk (PTT) switch on the transmitting radio must be asserted (also known as "keying" the radio). On assertion of this switch, the microphone input on the radio serves as an input for transmitting data. On the receiving end, the radio is unsquelched upon detection of a valid carrier. This transition from being squelched to being unsquelched generates a transient pulse at the receiving radio. Figure 6-4 shows an example of a transient observed on a Motorola XTS5000 radio when used in conjunction with the modems. The duration of the pulse is a function of the interfacing logic and characteristics of the radio used. It is necessary to wait until this transient pulse has died down before the PPDUs are actually transmitted. In the event that the PPDU transmission overlaps with the pulse, the demodulated data will be corrupted and this will result in errors in the received PPDU and eventually errors in the MPDU packet.

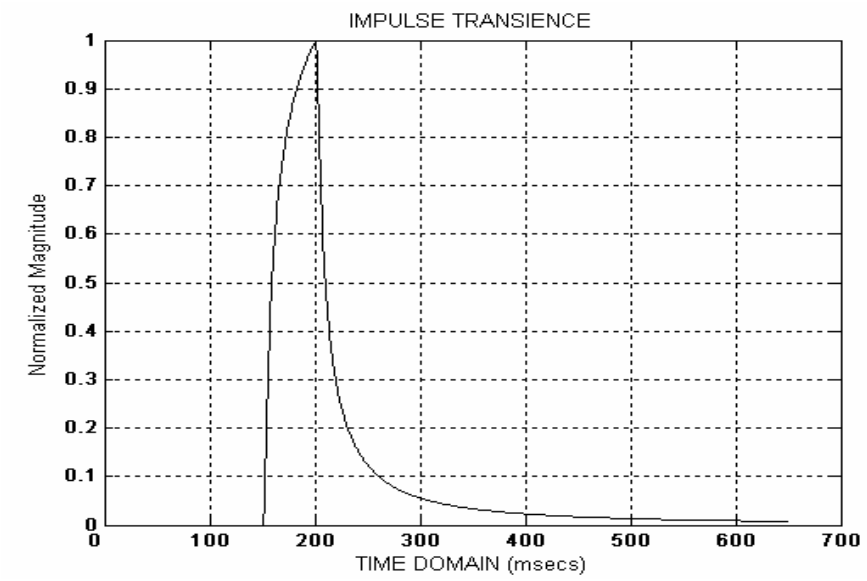

Figure 6-4: Transient pulse observed at the modem during PPT assert.

6.2.2. PPDU Interval

Once the initial transient has died down at the end of TX_KEY interval, we start transmitting an audio bandwidth OFDM signal from the EVM. In a single transmit slot it is possible to transmit multiple PPDUs. The time interval corresponding to a single PPDU is referred to as the PPDU Interval. The duration of this interval will depend upon the data rate achievable over the channel and size of the PPDU. The number of PPDU intervals in a single transmit slot varies depending upon the size of the data to be transmitted over the channel.

6.2.3. Inter-PPDU Interval

In addition to the PPDU intervals, the transmit slot may contain inter-PPDU intervals. No data signal is transmitted in this interval. During this interval the receiver algorithm and the transmitter algorithms, which will be explored in detail in Chapter 7, reinitialize.

6.2.4. End of Transmit Interval

This interval is similar to the Inter-PPDU Interval and follows the final PPDU transmission. No data is transmitted in this interval either. However the purpose of this interval apart from software initialization is to indicate the last PPDU transmission.

6.2.5. TX_UNKEY Interval

At the end of a transmit slot we have to deassert the PTT signal. This is important so that the radio can make a switch back to its default state. As in the previous case of switching from the receive state to the transmission state, a transient signal is generated in the transition between the loss of quieting and the activation of the receiver's squelch. It is possible that this transience will be misinterpreted as another PPDU transmission by the receiver algorithm. In order to avoid this, the transmit slot incorporates two intervals. The first is the addition of an End of Transmit (EOT) interval. Once the receiver algorithm has witnessed channel inactivity over the duration of an EOT interval, it suspends monitoring of the channel for the duration of the TX_UNKEY Interval. This ensures that no false alarms occur due to the PTT deassertion. Figure 6-5 shows the transient noise due to PTT deassert at the receiving modem interfaced with a Motorola XTS5000 radio.

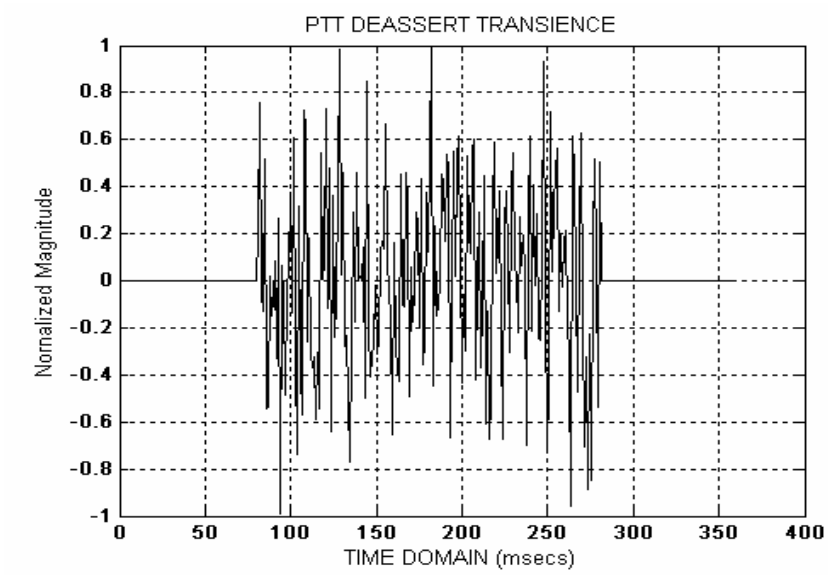

Figure 6-5: Transient noise seen at the modem input during deasert.

6.3. Receive Slot

Several analogies can be drawn betwen the transmit slot discussed in Section 6.2 and the receive slot. As discussed in Section 6.1, the modems at the transmitting end and receiving ends lock into synchronization. This means that the transmit and receive slots will last for nearly the same interval of time. The receive slot starts with the detection of the transient pulse discussed in Section 6.2.1. It can be further subdivided into RX_KEY, RX_WAIT, PPDU, Inter-PPDU and RX_UNKEY. Figure 6-3 shows these subdivisions in the context of a received waveform.

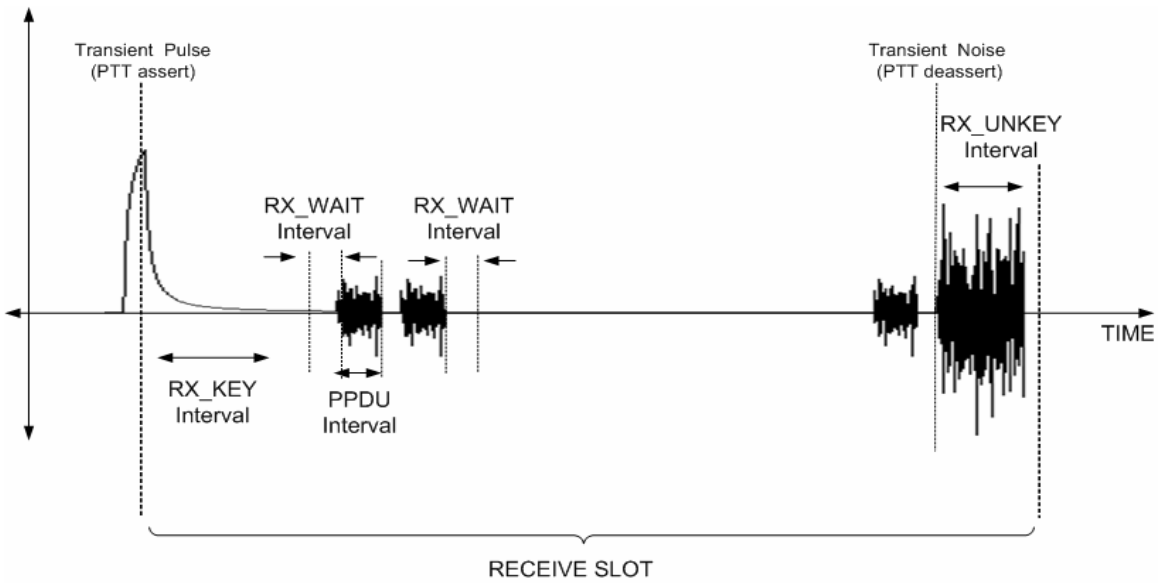

Figure 6-6: Receive Slot.

6.3.1. RX_KEY Interval

This is analogous to the TX_KEY interval. The objective of this interval is to avoid false alarms due to the transient pulse generated on switching from the receiving to the transmitting state for a half duplex radio. The duration of the RX_KEY interval is less than the duration of the PTT assertion interval so as to ensure that the receive algorithm which is described in Chapter 7 has sufficient time to reinitialize.

6.3.2. RX_WAIT Interval

The RX_WAIT interval is the time during which the receiving modem is awaiting a valid transmission. If the receiving modem starts receiving signal before the end of this interval, it is interpreted as a valid transmission. Once the channel has been detected silent for the entire duration of RX_WAIT interval, it is considered the end of transmission. Thus, in the case of multiple PPDU transmission, a part of the RX_WAIT interval overlaps the inter-PPDU interval as opposed to the End of Transmit (EOT) interval at the end of transmission. A detailed algorithm on the detection mechanism follows in Chapter 7.

6.3.3. PPDU Interval

This is same as the PPDU Interval of the transmit slot. In this interval the receiving modem demodulates the PPDU symbols into the data bits that constitute an MPDU.

6.3.4. RX_UNKEY Interval

This interval overlaps with the TX_UNKEY interval. Thus, the main function of this interval is to avoid a false alarm that may be generated by the transient noise caused by the receiver's squelch. During this interval, the receiver algorithm stops monitoring the channel for activity. Any signal on the channel will go undetected during this interval. Another alternative to this interval would be to demodulate the received transience noise and transfer the data bits to the NetBurner as a part of an MPDU. Since the MAC layer implementation as discussed in Chapter 5, has error detecting capabilities, the corrupted data will be discarded. These issues will be discussed in Chapter 9.

6.4. Duration of Transmit and Receive Slot

The implementation of the physical layer was discussed in Chapter 5. The transfer of data bits which are part of an MPDU is carried over *Interface I* using the handshaking protocol described in Chapter 5. For the DREAMS system implementation, each PPDU is comprised of one header symbol and six data symbols which translates into 144 bytes of data. In a single transmit slot a single, or multiple, PPDUs can be transmitted. A tradeoff must be made between the amount of data that can be transmitted and the amount of time

a radio will occupy the channel. In other words, there is a need to maximize the throughput efficiency of the transmit slot. From the description in Section 6.2, the duration of a transmit slot is given by Equation 6-1.

$$\begin{aligned} TS\_duration = {} & TX\_KEY + N \cdot PPDU\_Interval \\ & + (N-1) \cdot Inter\_PPDU\_Interval \\ & + EOT\_Interval + TX\_UNKEY \end{aligned}$$

Equation 6-1

where

N	=	Number of PPDU packets
TS_duration	=	Duration of Transmit Slot
TX_KEY	=	Duration of TX_KEY Interval
PPDU_Interval	=	Duration of PPDU Interval
Inter_PPDU_Interval	=	Duration of Inter-PPDU Interval
EOT_Interval	=	Duration of EOT Interval
TX_UNKEY	=	Duration of TX_UNKEY

Figure 6-7, plots the transmit slot duration as a function of number of PPDUs.

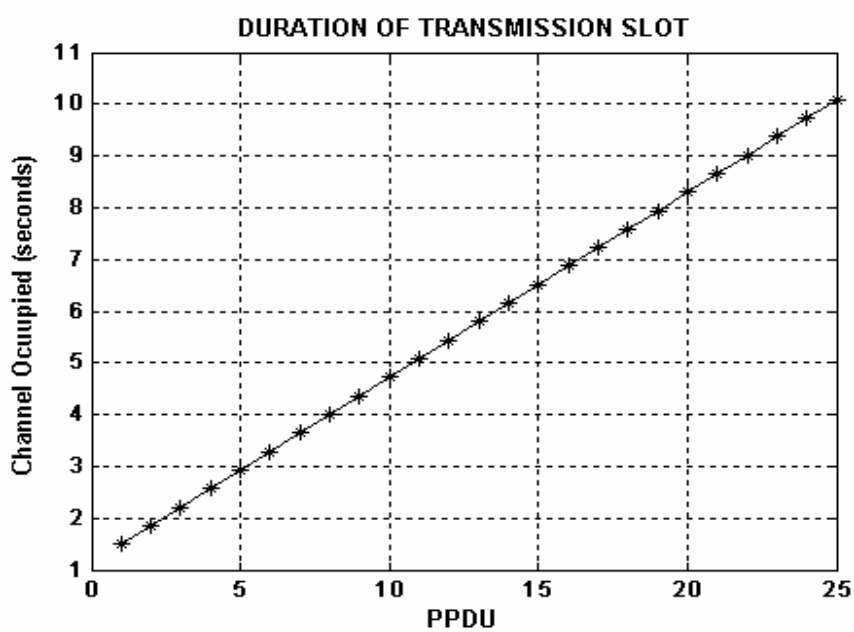

Figure 6-7: Transmit time versus number of PPDUs.

From Equation 6-1, it can be observed that a single transmit slot can be broadly divided into two sections. The first section represents the interval in which information symbols are transmitted. This corresponds to the interval represented by $N \cdot PPDU\_Interval$. The second section consists of intervals TX_KEY, $(N-1) \cdot Inter\_PPDU\_Interval$, $EOT\_Interval$ and TX_UNKEY during which no information is transmitted over the channel. Hence efficiency of the channel can be calculated by using Equation 6-2.

Equation 6-2

$$\%Efficiency = \frac{DataTime}{TransmissionSlot} \times 100$$

where

$DataTime$	=	Duration of $N \cdot PPDU\_Interval$
$Transmission\ Slot$	=	Duration of $TS\_duration$

The Figure 6-8 shows the behavior of the efficiency with respect to the number of PPDUs per transmit slot.

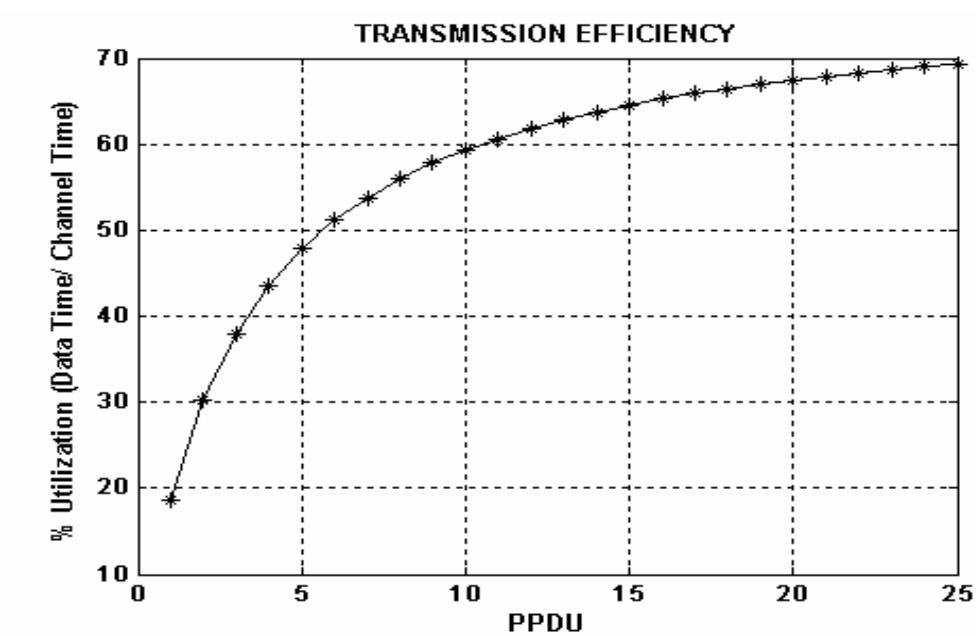

Figure 6-8:Transmission Efficiency as a function of data time and transmission slot duration.

From Figure 6-8 it can be observed that as the number of PPDUs in a single slot increases, the efficiency improves. However, any increase in the number of PPDUs also results in an increase in the duration of channel occupation as observed from Figure 6-7. Thus, a tradeoff has to be made between the possible transmission efficiency and the amount of time the channel is occupied. For the current design, the number of PPDUs which can be transmitted in a single transmit slot is limited to twelve. This gives a maximum achievable transmission efficiency of about 62% and a maximum channel occupation time of 5.436 seconds. Therefore, although the number of PPDUs to be transmitted is variable, it is bounded by a maximum value. The duration of the receive slot will be the same due to the synchronization between the transmitter and the receiver.

6.5. Handshaking

The physical layer implementation involves the design of the handshaking between the EVM and the NetBurner used over *Interface II*. As mentioned in Chapter 5, there are two types of handshaking codes used to control the flow of information. There is a direct analogy that can be drawn between the handshaking codes used and the software flow control mechanism described in the RS-232 protocol. In the RS-232 protocol, two bytes have been predefined in the ASCII character set to be used with software flow control. These bytes are named XOFF and XON, because they can stop and restart transmitting. The byte value of XOFF is 19, it can be simulated by pressing Ctrl-S on the keyboard. XON has the value 17 assigned which is equivalent to Ctrl-Q. Using software flow control is easy. If sending of characters must be postponed, the character XOFF is sent on the line, to restart the communication again XON is used. Sending the XOFF character only stops the communication in the direction of the device which issued the XOFF. The handshaking codes implemented on the modem can be viewed as a modified version of the software flow control defined by RS-232.

There are the two types of handshaking codes used viz. transmission mode handshaking codes and receive mode handshaking codes. The transmit flow control utilizes ASCII characters ‘a’ and ‘s’ while the receive flow control utilizes ASCII characters ‘R’ and ‘Q’. The ASCII character ‘a’, is transmitted from the EVM to the NetBurner at the

beginning of every transmit slot. This can be compared to the XON command used in software flow control. Before initializing transfer of data the NetBurner responds to the EVM by transmitting the number of PPDUs that will be generated by the MPDU. From Section 6.4 and discussions in Chapter 5, it can be concluded that this number will be an integer value between 0x00 and 0x0c.

Similarly, when the radio starts receiving a valid signal, the EVM on the receiving modem sends a request to initiate the data transfer over the serial port to the interfaced NetBurner, by sending an ASCII character 'R'. If the NetBurner is ready to receive the data, it sends a clear to send signal to the EVM in form of ASCII character 'Q'. Once these handshaking codes are exchanged, the EVM starts transferring the data bits over *Interface II*. Before sending any data, the EVM always exchanges the ASCII characters 'R' and 'Q'. This exchange of codes continues for the duration of the received PPDUs. An overview of the handshaking codes in context with the transmit and receive slots is given in Figure 6-9 and Figure 6-10, respectively.

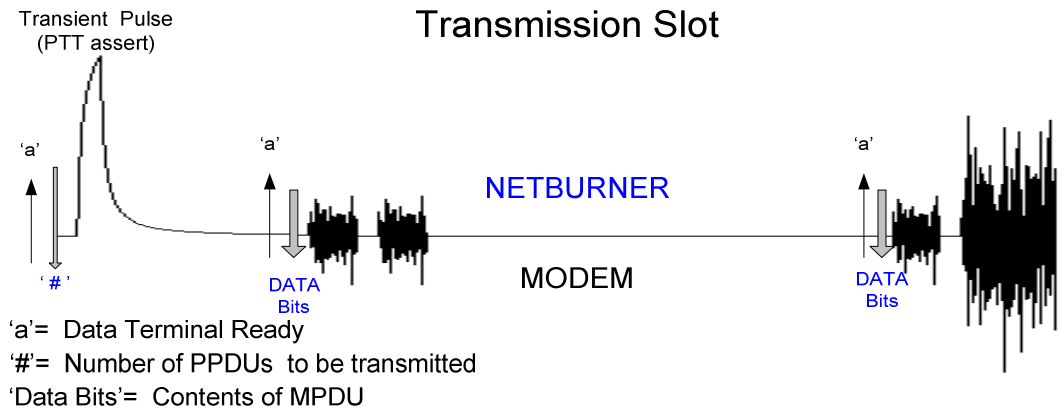

Figure 6-9: Transmit Mode control signals.

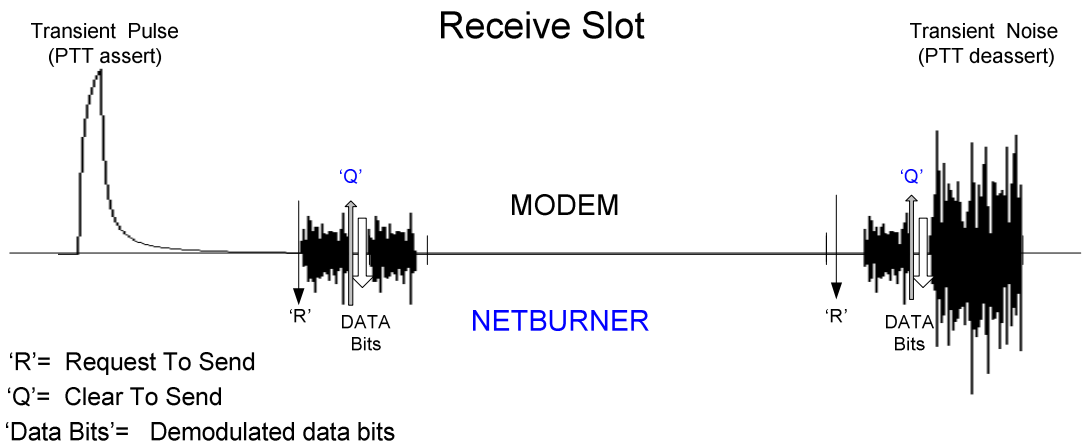

Figure 6-10: Receive Mode control signals.

7. SOFTWARE IMPLEMENTATION

Chapter 5 introduced the design and implementation of the modems and their use with the DREAMS software. Chapter 6 described the components of the transmit and receive slots and discussed the efficiency of transmission. This chapter discusses the implementation of the software algorithms. The software implementation is described only for the operations performed on the EVM. The software for implementing the Ethernet stack on the NetBurner is beyond the scope of this thesis. This basic stack was provided with the NetBurner, and the NetBurner application code was modified as described in reference [30]. Section 7.2.1 introduces the main routine. The demodulator and modulator algorithms are described in Sections 7.2.2 and 7.2.3 respectively.

7.1. Modem States

The modems have three distinct operational states as defined in Chapter 5: listen, receive and transmit. In each state a different software routine is executed as shown in Figure 7-1. Due to the half duplex nature of the radio link, the modem never receives and transmits at the same instant. The listen state is the default state for the modem. This is to say that the modem is always listening for transmissions on the radio channel. During the listen state the modem executes the main routine which is described in Section 7.2.1. The next state is referred to as the receive state. The modem enters this state when it detects any activity on the channel. The demodulated data bits are then transmitted to the NetBurner. This process is augmented with the exchange of suitable handshaking codes which ensure that the EVM and the NetBurner interact properly. During this state the modem implements the demodulator routine described in Section 7.2.2.

The modem will enter into the transmit state only upon the assertion of two conditions: first there should be no activity on the channel and second there should be data available to transmit. Channel idleness is confirmed by the implementation of the MAC layer protocol discussed in Chapter 5. In order to confirm availability of data, the handshaking protocol detailed in Chapters 5 and 6. During the transmit state the modem executes the modulator routine.

In addition to these three modes, a debugger mode is implemented in which the handshaking signals are disabled. The primary function of this mode is to transmit a test pattern from one end and observe the demodulated data over the receiving terminal. The debugger mode allows the EVM to function independent of the NetBurner. When used in this mode the NetBurner will usually be disconnected from the EVM. The modem enters into debugger mode by external triggering using *Interface III*, the interfacing circuit is given in Appendix I, between the EVM and the daughter board. The modules used in debugger mode are same as the ones used in the transmission state, the only differences being the lack of handshaking and the data that is modulated.

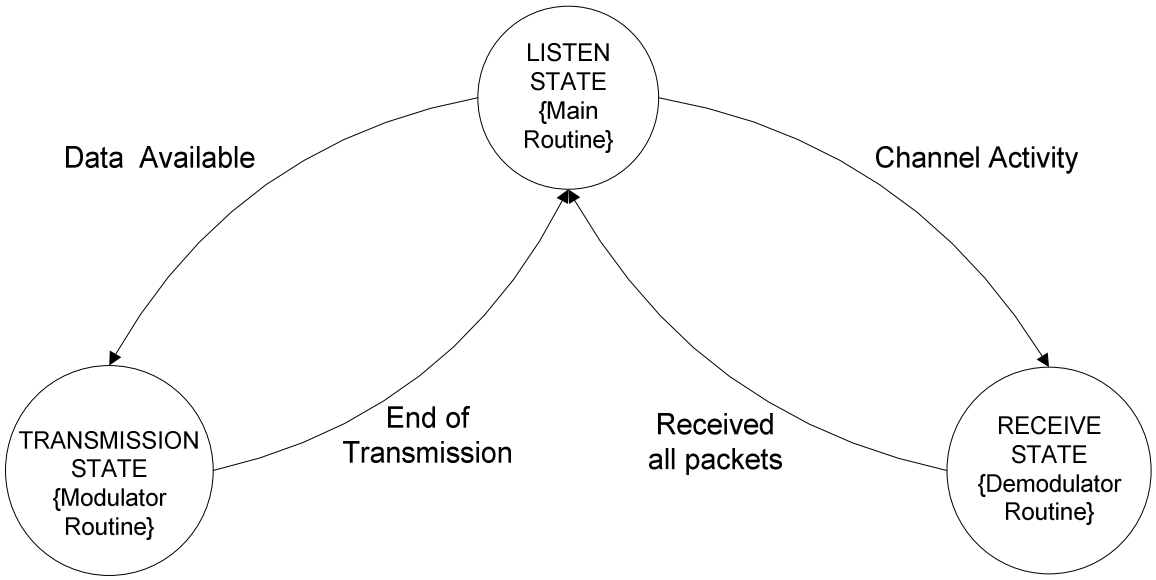

Figure 7-1: The three routines for the modem.

7.2. Software Routines

As described in Section 7.1, there are three software routines which are executed on the EVM. The description of the routines is given below.

7.2.1. Main Routine

This routine is executed when the modem is in its default listening state. There are three ways in which the modem exits this state: 1) if the receiver detects the start of a transmission, 2) if the NetBurner signals the modem that it has data to send, or 3) the

debugger mode is triggered externally. In order to detect channel activity the modem monitors the channel periodically. The periodicity is a function of the sampling rate implemented by the codec in the EVM. For example at a sampling rate of 8 KHz the modem monitors the channel every 125 μ secs. This is discussed in detail in Chapter 8. If it detects any activity on the channel it will exit to the demodulator routine.

If the channel is inactive, then the modem can enter the transmit state provided there exists data to be transmitted. To check for the availability of data, the EVM transmits the handshaking code 'a' as described in Chapter 6. If the NetBurner has data, then it proceeds by exchanging the appropriate handshaking codes. The main routine exits to the modulator routine once these signals are exchanged. In order to enter and exit the debugger mode external interrupts are used.

The flowchart for the Main routine is shown in Figure 7-2. The first step in the algorithm is to check the status of the Transmit Ready (TXR) flag. Please note that the list of the software flags used is given in Appendix H. This flag is set at the end of the backoff algorithm. The modem will enter the backoff routine only if there is data to be transmitted. At the same time, it also checks the status of the Interrupt Request (IRQ) flag. If the IRQ flag is set, the main routine branches into debugger mode. Next, it checks for activity on the channel. If any signal is detected, the main routine exits to the Receiver routine. In the following step it checks for response to the data send request which was made to the NetBurner by using the handshaking code 'R'. This was described in Chapter 6. If the NetBurner has data, it sends the number of packets to be transmitted and the main routine starts a random backoff timer and loops back to first step. When the backoff timer expires, the TXR flag is set. The backoff algorithm is implemented by generating a random number.

The steps are summarized below:

STEP1: Start.

STEP2: Check the status of TXR flag and IRQ flag. If set goto A (Figure 7-3).

STEP3: Check channel activity. If signal present goto A.

STEP4: Check DTR flag. If set start Back off counter.

STEP5: If Backoff counter completed assert TXR.

STEP6: Goto STEP 2.

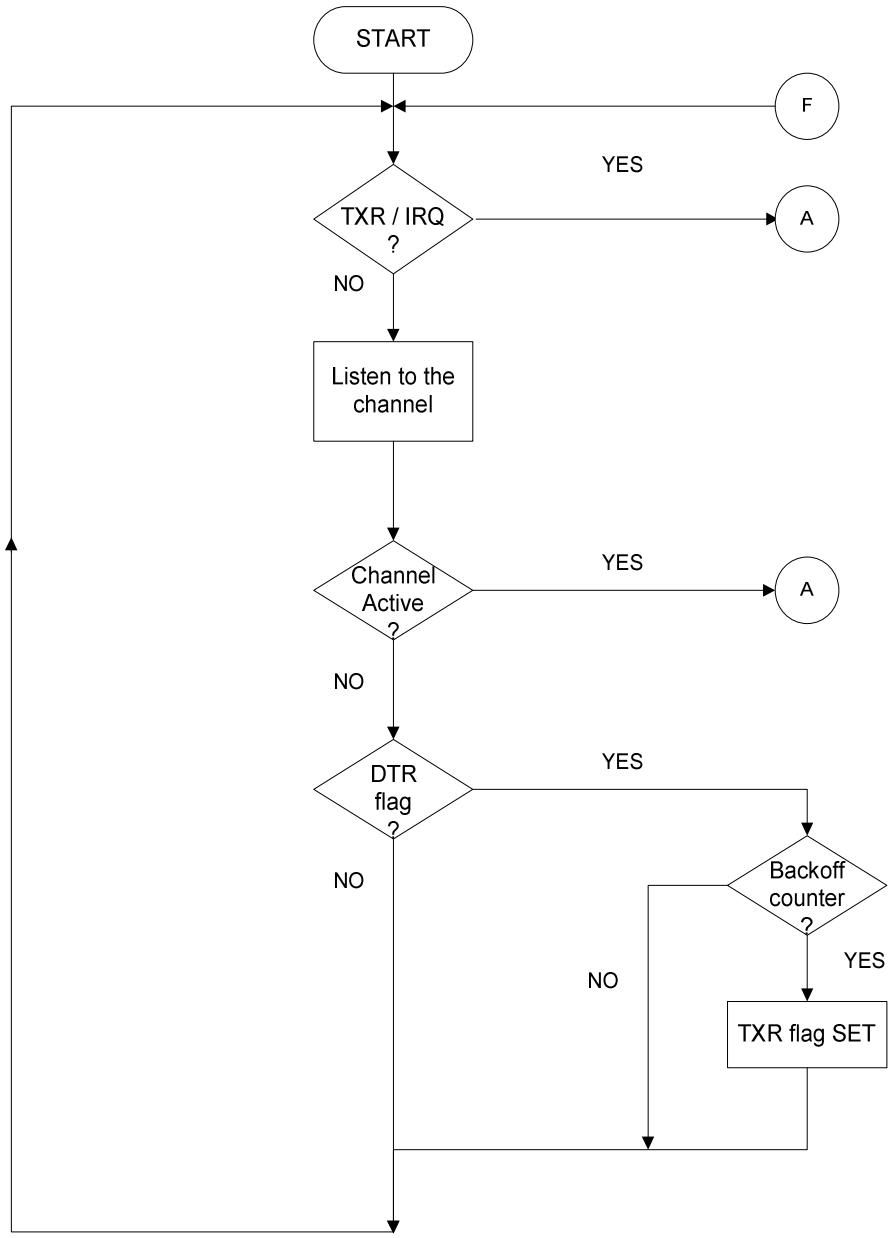

Figure 7-2: Main routine implemented on DSP.

7.2.2. Demodulator Routine

The modem enters this routine when it senses any signal in the channel. The receiver algorithm is required to synchronize with the incoming transmission. As seen in the Chapter 6, the PPDU transmission is always preceded by a transient impulse. The

synchronization takes place in two stages. In the first stage of synchronization, the receiver detects the impulse on the channel using the double window implementation used in packet detection, which was described in Chapter 3. It then enters into an RX_KEY interval in order to avoid a false alarm over the duration of transient impulse. At the second stage of synchronization, the algorithm uses a correlator in conjunction with the double window implementation. The correlator structure is used in symbol symchronization which was described in Chapter 3. The double window method, which detects the signal on the basis of signal-to-noise ratio, is used for coarse tuning. Correlating the received signal with the local copy of the known header enables fine tuning. Once the start of packet slot has been located, the receiver starts demodulating the data using the modules described in Chapter 3. The demodulated data is transmitted from the EVM over the serial port to the NetBurner. This transfer is preceded by the exchange of receiver mode handshaking codes 'R' and 'Q" which where described in Chapter 6. This procedure is repeated for every PPDU transmission. Thus, the receive algorithm repeats the second stage of synchronization to resynchronize each PPDU transmission.

The algorithm can be summarized as:

STEP1: Check Status of FD flag (False Detection Flag). If it is set go to B (Figure 7-4).

STEP2: Wait for duration for RX_KEY interval.

STEP3: Check for status of Timeout flags. If SET goto F (Figure 7-2).

STEP4: If signal is present, send RTS else goto STEP 3.

STEP5: Demodulated Data.

STEP6: Check for status of CTS flag. If SET, send data over serial flag else goto STEP 3.

The demodulator routine is shown in Figure 7-3. The software flags used are described in Appendix H. Further, the demodulator routine overlaps with the duration of the receive slot which was discussed in Chapter 6.

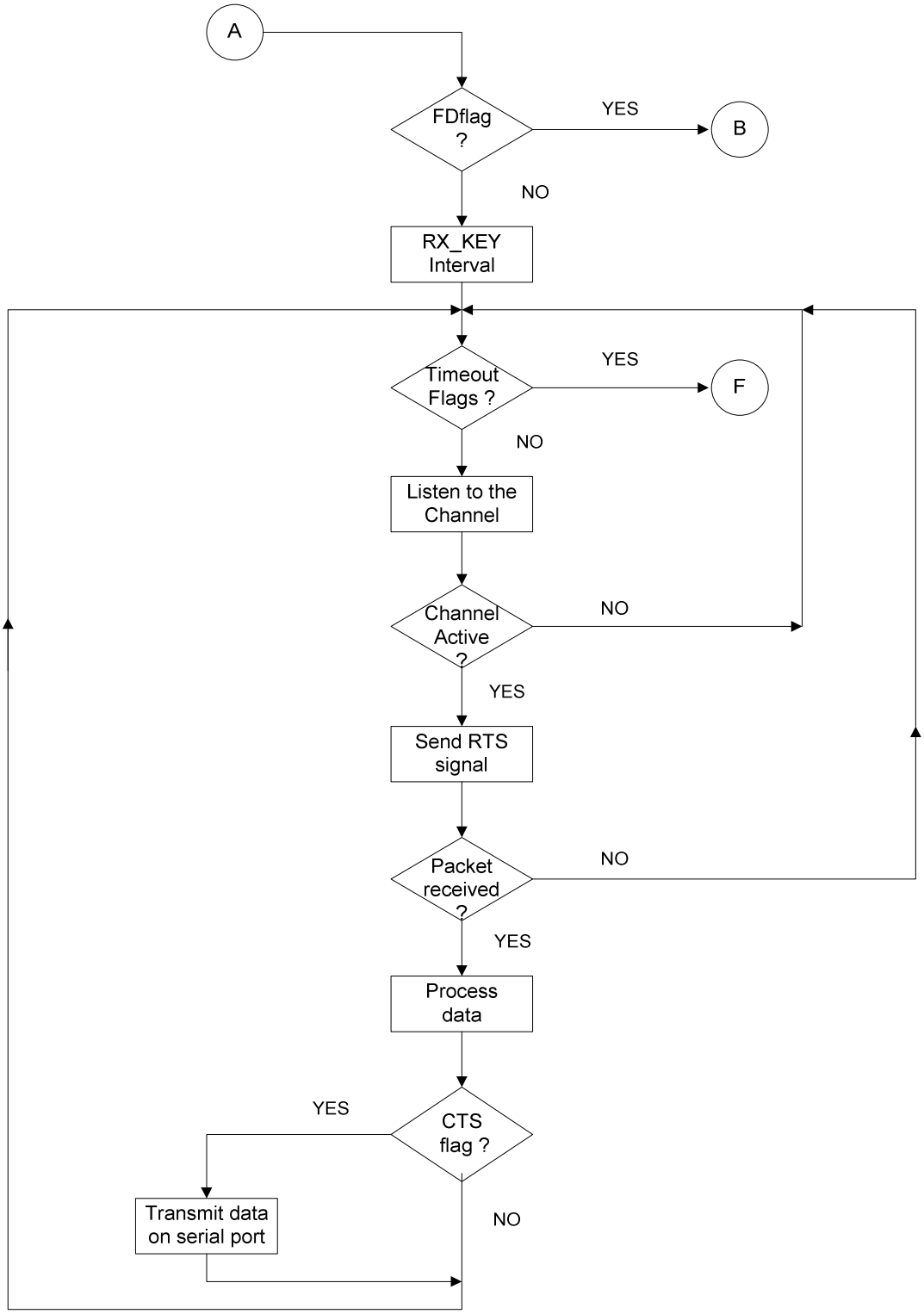

Figure 7-3:Demodulator routine implemented on DSP.

7.2.3. Modulator Routine

In absence of any channel activity, when the modem is in its default main routine, the EVM periodically queries the NetBurner for data. If the NetBurner has data to send, it responds by sending an 8-bit binary number between 0x01 to 0x0C which represents the number of PPDUs that will be transmitted in the transmit slot, as discussed in Chapter 6. After the initial handshaking, the main routine branches to the modulator routine at the end of the randomly selected backoff interval. Once in the modulator routine, the modem first asserts the PTT line to occupy the channel so that other modems will notice the channel activity and will therefore inhibit any scheduled transmission. On receiving the data bits from the NetBurner, the EVM modulates them to form a single PPDU. The SymbolSentFlag (SSF), described in Appendix H, is used to communicate the transmission of a single PPDU. At the end of a single PPDU, the EVM enters into a no-op (no operation) stage for the duration of the Inter-PPDU Interval. This process is repeated until the PacketSentFlag (PSF) is SET which indicates that all data bits to be transmitted have been converted into corresponding PPDUs. Once all the PPDUs have been transmitted, the EVM waits for the duration of the End of Transmit (EOT) interval before PTT deassertion. In order to ensure that no false alarms are generated before the end of PTT deassertion transient, the modem will remain in the transmit routine for the duration of TX_UNKEY interval. The modulator routine overlaps with the transmit slot. The make up of the transmission slot was discussed in Chapter 6. The Figure 7-4 shows the flow chart for the modulator routine.

The algorithm can be summarized as:

STEP1: Assert the Push To Talk (PTT) signal.

STEP2: Send DTR over the serial port to obtain data from the NetBurner.

STEP3: Wait for the duration of TX_KEY interval.

STEP4: Check the status of the PSF flag. If SET goto STEP 9 else goto STEP 5.

STEP5: Check the status of the SST flag. If SET goto STEP 8 else goto STEP 6.

STEP6: Modulate the data to form the audio signal and send it to radio.

STEP7: Send DTR signal (ASCII ‘a’) to obtain data from NetBurner and goto STEP 5.

STEP8: Wait for the Inter-packet Interval and then transmit DTR signal (ASCII ‘a’). Goto STEP 4.

STEP9: Wait for EOT interval.

STEP10: Send PTT deassert signal and wait for TX_UNKEY interval. Goto F.

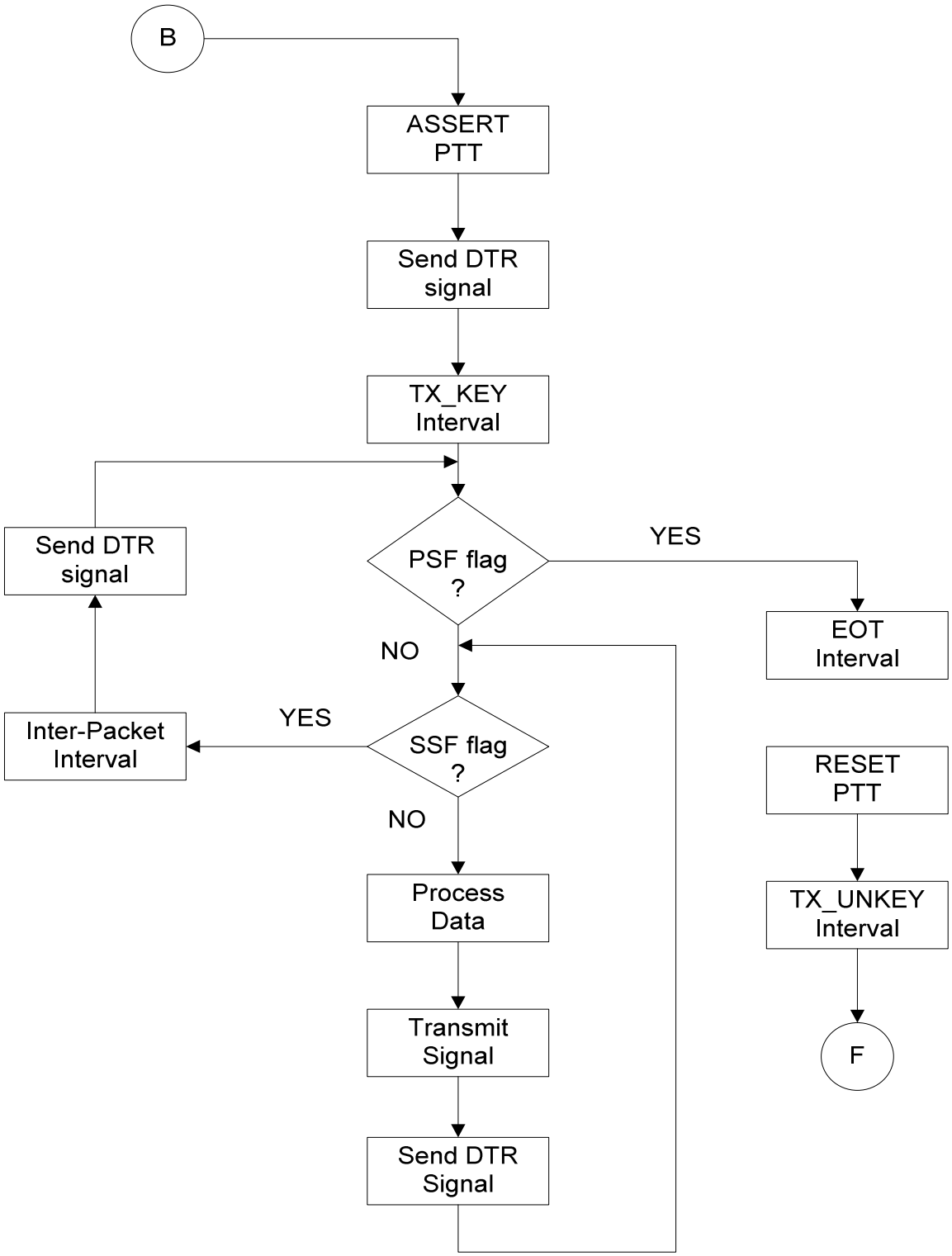

Figure 7-4: Modulator routine implemented on DSP.

8. EXPERIMENTAL SETUP AND PERFORMANCE EVALUATION

This Chapter discusses the frequency and time domain characteristics of the audio band OFDM signal and the performance of the system under the conditions of Additive White Gaussian Noise (AWGN), carrier phase incoherency and synchronization errors. In Section 8.1, a detailed analysis of the factors which affect the available bandwidth and achievable data rates is given. Section 8.2, lists the simulated configuration and the associated parameters. The comparison between the performances of different configurations is given in Section 8.3.

8.1. Factors affecting the Data Rate

The data rate for the system depends on the frequency response of the audio system in the radio, the size of FFT/IFFT used in the implementation, the data mapping scheme implemented and the sampling rate selected for the codec in the EVM.

8.1.1. Frequency Response

As mentioned in Chapter 1, the radio is designed to transmit voice signals. The voice signals generally are contained in a bandwidth ranging from 300 Hz to 3.3 KHz. The frequency response of the radio is tailored for this passband. Figure 8-1 and Figure 8-2 show the measured 3dB and 10dB bandwidths for a typical NBFM VHF radio. The radio used to obtain the plots was an ICOM 2TH VHF radio.

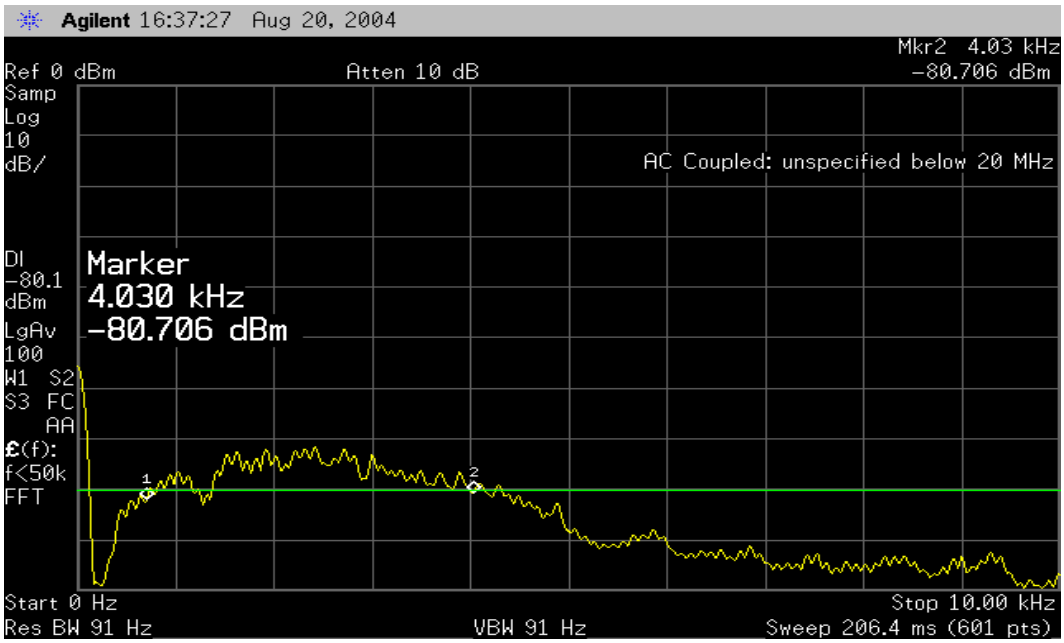

Figure 8-1: Frequency response showing the 3dB bandwidth for the ICOM 2TH radio.

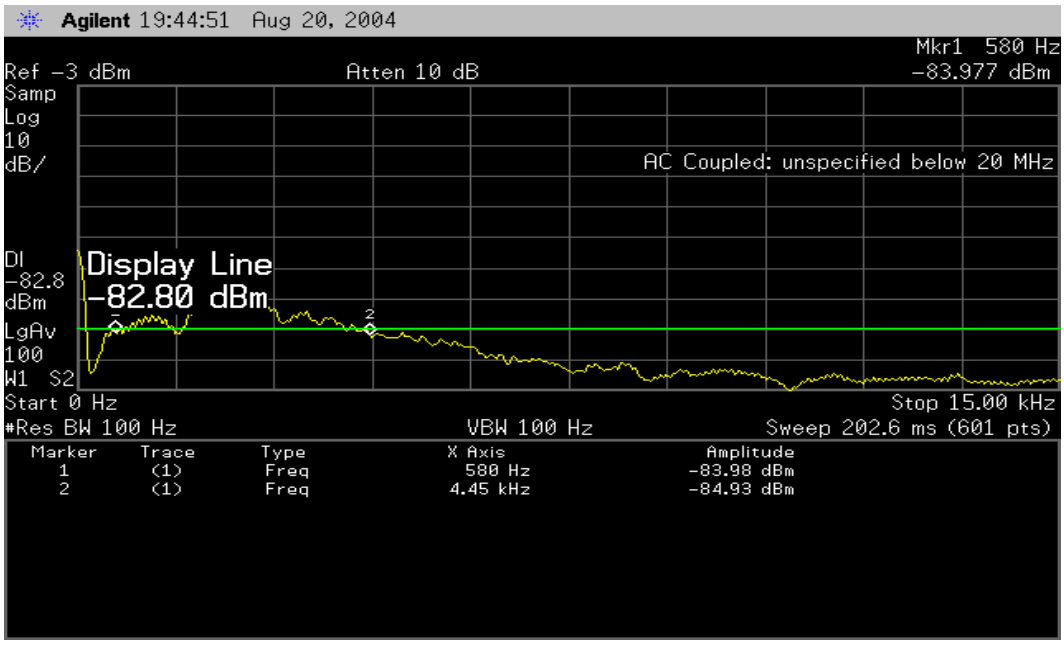

Figure 8-2: Frequency response showing the 10dB bandwidth for ICOM 2TH radio.

As seen from Figure 8-1 and Figure 8-2 the 3 dB bandwidth for the radio extends from about 400 Hz to 3 KHz and the 10dB bandwidth for the radio approximately ranges from 300 Hz to 4.3 KHz. This roughly translates to a 3dB bandwidth of 2.7 KHz and a 10 dB bandwidth of 4 KHz. These frequency characteristics of the radio restrict the possible bandwidth of the baseband signal since the higher frequency subcarriers will be heavily

attenuated. The frequency spectrum for the baseband and audio band OFDM symbols was discussed in Chapter 3.

In addition to the audio passband constraints of the radio, the Narrow Band Frequency Modulation (NBFM) channel used for transmission also imposes certain restrictions on the bandwidth of the modulation signal. As mentioned in the Chapter 2, the maximum permissible deviation for NBFM broadcasts is +/- 2.5 KHz and an adjacent channel spacing of 15, 20 or 25 KHz. Further, the NBFM transmissions limit the maximum modulating frequency to about 4 KHz and the modulation index to 0.625. This implies that the spectrum occupied by the audio band OFDM symbol should not exceed 4 KHz.

8.1.2. Data Mapping Scheme

In addition to the bandwidth of the audio band OFDM symbol, the data mapping scheme also influences the data rate [22]. Data mapping, or data modulation, involves the mapping of bits into symbols. The current implementation uses 64 QAM, in which 6 bits are mapped into a constellation point, in case of 128 QAM, 7 bits are mapped into a single constellation point and for 256 QAM, 8 bits are used to form a symbol. Thus, for a baud rate of 2000 bauds per sec, the bit rate achievable using 64 QAM will be 12 Kbps, using 128 QAM will be 14 Kbps and for 256 QAM, it will be 16 Kbps.

8.1.3. Size of FFT/IFFT

The data rate also depends upon the number of subcarriers used to transmit the data. The number of subcarriers, in turn, depends upon the size of the FFT/IFFT used [12]. As mentioned in Chapter 3, the current implementation uses an FFT/IFFT size of 64. All the subcarriers are used to transmit data. Increasing the size of FFT/IFFT will increase the number of subcarriers and the cumulative data rate. For a fixed bandwidth of baseband OFDM signal, increasing number of subcarriers is equivalent to decreasing the subcarrier spacing and hence the subcarrier bandwidth, as illustrated in Figure 8-3 and Figure 8-4. At the same time, increasing the size of FFT/IFFT also increases the time duration of the OFDM symbol which will influence the latency of the system. A trade off is thus required to be made between the size of FFT and the permissible system latency.

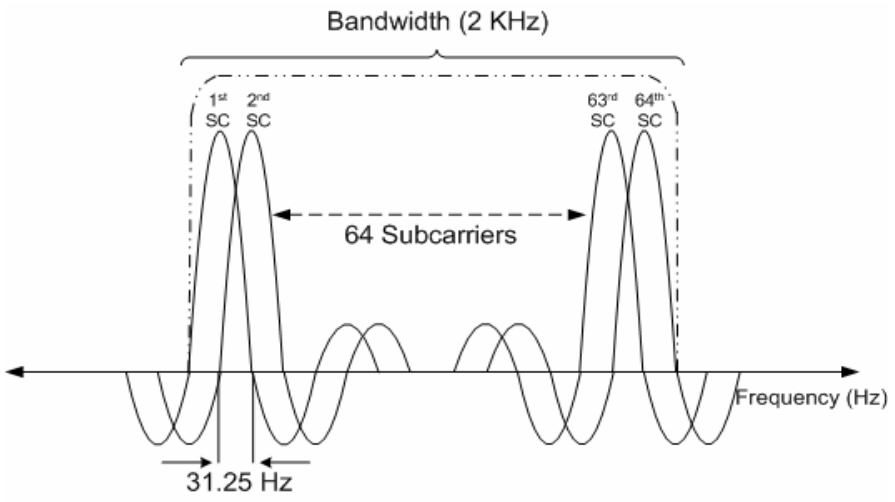

Figure 8-3: OFDM symbol using a FFT size of 64.

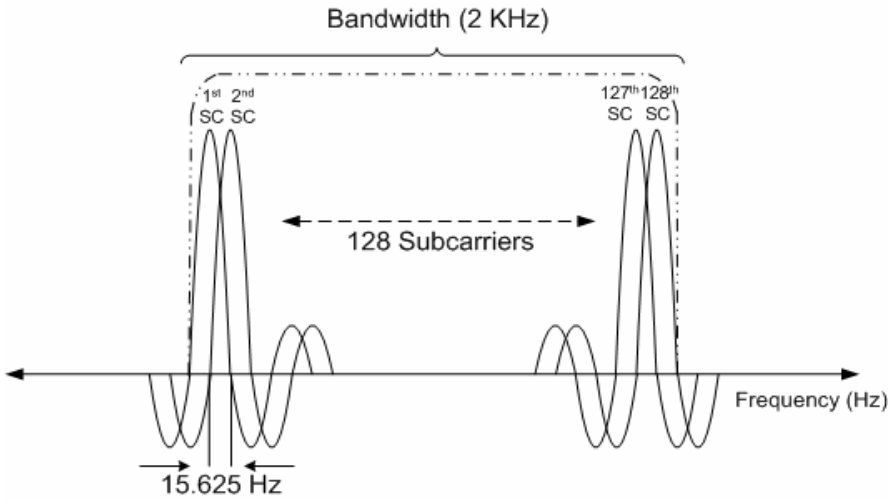

Figure 8-4: OFDM symbol using a FFT size of 128.

As seen in Figure 8-3, for an audio band OFDM signal bandwidth of 2 KHz and FFT/IFFT size of 64, the spacing between the subcarriers, which is half the subcarrier bandwidth, is 31.25 Hz. The OFDM symbol duration is 32 msecs. If the size of FFT/IFFT is increased to 128, the subcarrier spacing reduces to 15.625 Hz as shown in Figure 8-4 and the OFDM symbol duration is 64 msecs.

8.1.4. Sampling Rate

The sampling rate of the codec present in the EVM influences the interpolation factor to be used and the frequency characteristics of the OFDM signal. The exact nature of

influence will be discussed in Section 8.2. The codec on the EVM supports sampling rates of 8 KHz, 12 KHz, 16 KHz, 24 KHz and 44.1 KHz. In the current implementation the sampling rate has been fixed to 8 KHz which is equivalent to a sampling interval of $125\,\mu\text{sec}$.

8.2. Calculation of Data Rate

From the frequency response plots in Figure 8-1 and Figure 8-2 for the Icom T2H radio, it can be observed that the 3dB bandwidth available at the radio is about 3 KHz. There are a number of possible configurations that satisfy all the requirements described in Section 8.1. For ease in software implementation, the size of FFT/IFFT i.e. the number of subcarriers and length of the cyclic prefix remains same in all the configurations [32]. Thus, the number of samples representing baseband OFDM symbols is fixed to 80 as described in Section 3.1.7. The bandwidth of the baseband OFDM symbol and the resulting data rate is now a function of the sampling rate and the interpolation factor. Sections 8.2.1, 8.2.2, 8.2.3 and 8.2.4 describe the various possible configurations in detail.

8.2.1. Version 1.1

This version uses an interpolation factor of 4 and a codec sampling rate of 8 KHz. Thus, the total number of samples representing an audio band OFDM symbol is 320 (80*4) samples. Further, the audio band carrier frequency is represented by 4 samples per cycle. For the codec sampling rate of 8 KHz, this translates to an audio band carrier frequency of 2 KHz and audio band OFDM symbol duration of 40 msec. The bandwidth per subcarrier is 31.25 Hz and the cumulative bandwidth of the subcarriers which represents the audio band OFDM symbol bandwidth, is 2 KHz. The data rate for this version varies depending upon the data mapping scheme used. Table 8-1 summarizes the parameters for Version 1.1.

Parameters	Version1.1a	Version1.1b	Version1.1c
Audio band Carrier Frequency (KHz)	2	2	2
IFFT Size(number of subcarriers)	64	64	64
Interpolation Factor	4	4	4
Subcarrier spacing (Hz)	31.25	31.25	31.25
BW of audio band OFDM Symbol (KHz)	2	2	2
Lowest Carrier Frequency (KHz)	1	1	1
Highest Carrier Frequency (KHz)	3	3	3
Duration of audio band OFDM Symbol msec	32	32	32
Data Modulation	64 QAM	128 QAM	256 QAM
Data Rate Kbps	12	14	16
Sampling Frequency (KHz)	8	8	8

Table 8-1: Configuration parameters for Version 1.1.

8.2.2. Version 1.2

This version uses an interpolation factor of 6 and the codec sampling rate of 12 KHz. Thus the total number of samples representing the audio band OFDM symbol is 480 (80*6) samples. The audio band carrier frequency is represented by 6 samples per cycle. For the selected codec sampling rate of 12 KHz, this translates to audio band carrier frequency of 2 KHz and audio band OFDM symbol duration of 40 msec. The bandwidth per subcarrier is 31.25 Hz and the cumulative bandwidth of the subcarriers which

represents the audio band OFDM signal bandwidth, is 2 KHz. The data rate for this version varies depending upon the data mapping scheme used. Table 8-2 summarizes the parameters for Version 1.2.

Parameters	Version1.2a	Version1.2b	Version1.2c
Audio band Carrier Frequency (KHz)	2	2	2
IFFT Size(number of subcarriers)	64	64	64
Interpolation Factor	6	6	6
Subcarrier spacing (Hz)	31.25	31.25	31.25
BW of audio band OFDM Symbol (KHz)	2	2	2
Lowest Carrier Frequency (KHz)	1	1	1
Highest Carrier Frequency (KHz)	3	3	3
Duration of audio band OFDM Symbol msec	32	32	32
Data Modulation	64 QAM	128 QAM	256 QAM
Data Rate Kbps	12	14	16
Sampling Frequency (KHz)	12	12	12

Table 8-2: Configuration parameters for Version 1.2.

8.2.3. Version 2

The bandwidth of the audio band OFDM symbol for this version is 3 KHz. The interpolation factor used is 5 and the codec sampling rate selected is 12 KHz. Thus the total number of samples representing the audio band OFDM symbol is 400 (80*5) samples. The audio band carrier frequency is represented by 5 samples per cycle which equates to an audio band carrier frequency of 2.4 KHz. The duration of an audio band OFDM symbol is 26.67 msec. The bandwidth per subcarrier is 46.87 Hz and the cumulative bandwidth of the subcarriers is 3 KHz. The data rate for this version varies depending upon the data mapping scheme used. Table 8-3 gives further details on Version 2.

Parameters	Version2a	Version2b	Version2c
Audio band Carrier Frequency (KHz)	2.4	2.4	2.4
IFFT Size(number of subcarriers)	64	64	64
Interpolation Factor	5	5	5
Subcarrier spacing (Hz)	46.87	46.87	46.87
BW of audio band OFDM Symbol (KHz)	3	3	3
Lowest Carrier Frequency (KHz)	0.9	0.9	0.9
Highest Carrier Frequency (KHz)	3.9	3.9	3.9
Duration of audio band OFDM Symbol msec	21.33	21.33	21.33
Data Modulation	64 QAM	128 QAM	256 QAM

Data Rate Kbps	18	21	24
Sampling Frequency (KHz)	12	12	12

Table 8-3: Configuration parameters for Version 2.

8.2.4. Version 3

The bandwidth of the audio band OFDM symbol is 4 KHz which represents the approximate 10dB bandwidth of the audio passband. The interpolation factor used is 6 and the codec sampling rate is 16 KHz. Thus, the total number of samples representing the audio band OFDM signal is 480 (80*6) samples. The audio band carrier frequency is represented by 6 samples per cycle. This translates to an audio band carrier frequency of 2.67 KHz and audio band OFDM symbol duration of 20 msec. The bandwidth per subcarrier is 62 Hz and thus the cumulative bandwidth of the subcarriers is 4 KHz. The data rate for this version varies depending upon the data mapping scheme used as seen in Table 8-4.

Parameters	Version3a	Version3b	Version3c
Audio band Carrier Frequency (KHz)	2.67	2.67	2.67
IFFT Size(number of subcarriers)	64	64	64
Interpolation Factor	6	6	6
Subcarrier spacing (Hz)	62.5	62.5	62.5
BW of audio band OFDM Symbol (KHz)	4	4	4
Lowest Carrier Frequency (KHz)	0.667	0.667	0.667

Highest Carrier Frequency (KHz)	4.667	4.667	4.667
Duration of audio band OFDM Symbol msec	16	16	16
Data Modulation	64 QAM	128 QAM	256 QAM
Data Rate Kbps	24	28	32
Sampling Frequency (KHz)	16	16	16

Table 8-4: Configuration parameters for Version 3.

8.3. Performance Evaluation using Simulation

This section investigates the performances of all the versions in terms of their respective Bit Error Rates (BER). Section 8.3.1 explores the performance in presence of Additive White Gaussian Noise (AWGN). In addition to AWGN, the performance of the demodulator is also contingent upon the phase coherency of the audio band carrier; this issue is elaborated in Section 8.3.2. The degradation in performance due to synchronization errors is discussed in Section 8.3.3. All the evaluations have been performed using MATLAB®. The audio passband of the radio is emulated by a filter having the frequency response and phase response shown in Figure 8-5. The filter has a 3 dB passband between 300 Hz to 3500 Hz which translates to a 3dB bandwidth of 3.3 KHz and a 10 dB passband between 200 Hz to 4200 Hz which translates to a 10 dB bandwidth of 4 KHz. The filter also has a linear phase response in the frequency range of interest.

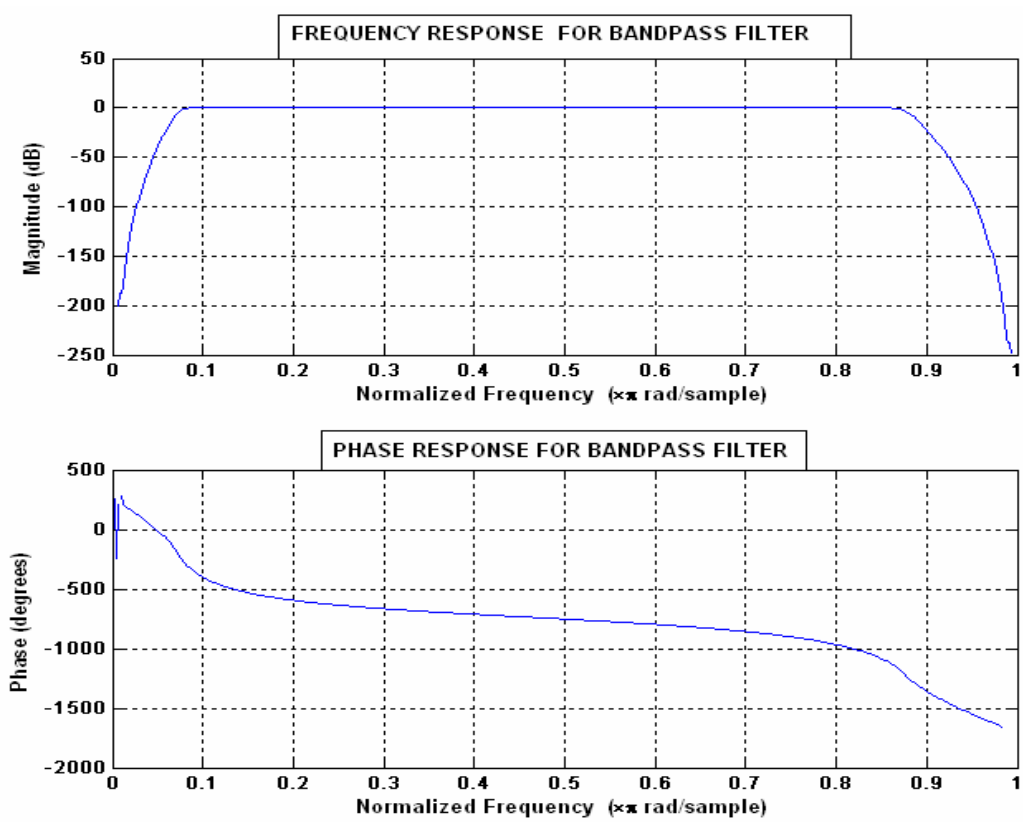

Figure 8-5: Frequency and phase response for the Bandpass filter.

8.3.1. Performance in presence of Noise (AWGN)

Bit Error Rate (BER) is used as a criterion to evaluate the communication performance achievable with various data modulation schemes for the different versions discussed in Section 8.2. Let the average signal energy per symbol be denoted by E_s and average energy per bit be denoted by E_b. The relationship between signal energy per bit and signal energy per symbol for an M-ary data modulation scheme in which m bits are mapped into $M=2^m$ symbols is given by Equation 8-1.

$$E_b = \frac{E_s}{m}$$

Equation 8-1

where

E_b	=	Energy per bit
E_s	=	Energy per symbol
M	=	Number of symbols

A similar relationship exists for the signal to noise (SNR) ratio per bit and signal to noise (SNR) per symbol [22].

Equation 8-2

$$\gamma_b = \frac{\gamma_s}{m}$$

where

γ_b	=	SNR per bit
γ_s	=	SNR per symbol
M	=	Number of symbols

The acceptable value for Bit Error Rate (BER) depends upon the application. Some voice-band modem applications, such as the ones which are responsible for the transfer of financial data permit error rates no greater than 10^{-5}. In the case of applications like digitized voice in a cellular or mobile radio system, the tolerable error rates can be as high as 10^{-2} to 10^{-3}. For high fidelity audio systems like CD players, the acceptable BER performance is on the order of 10^{-8}. The BER performance is affected by the SNR of the received signal. The SNR level at the demodulator depends upon a number of factors like received power, distance from transmitter, transmitted power and the surrounding terrain. The relationship between transmitted and received powers in a single path free-space channel is given by Equation 8-2 [31].

Equation 8-3

$$\frac{\mathrm{Pr}}{P_t} = G_t G_r \left(\frac{\lambda}{4\pi d}\right)^2$$

where

P_r	=	Received power.
P_t	=	Transmitted power.
G_t	=	Gain at the transmitter antenna
G_r	=	Gain at the receiver antenna
λ	=	wavelength of the transmitted signal
D	=	distance between the transmitter and receiver

Using Equation 8-3, a path loss model can be developed which gives the difference in the transmitted power and received power as a function of the distance and the frequency of transmission. This is referred to as the free-space path loss equation and is given by Equation 8-4.

$$Lp(dB) = 32.4 + 20\log(d) + 20\log(f)$$ **Equation 8-4**

where

L_p	=	Path loss in dB
D	=	Distance in kilometers
F	=	Frequency of transmission in MHz

Figure 8-6 shows the relationship between the signal to noise ratio and the distance from the transmitter. The transmitter power, P_t, varies from 1W, 2W, 4W, 6W. The transmit frequency is assumed to be 150 MHz. The received power, P_r, is calculated as shown in Equation 8-5.

$$\mathrm{P_r}(dB) = P_t - L_p$$ **Equation 8-5**

The noise power, N, is given by Equation 8-6.

$$N = kTBW$$ **Equation 8-6**

where

N	=	Noise power
K	=	Boltzmann's constant
		(1.38x 10^{-23} W/K-Hz)
T	=	Ambient Temperature (Kelvin)
BW	=	Bandwidth of the signal (Hz)

The signal-to-noise ratio for the received signal, *SNR,* will be calculated as shown in Equation 8-7.

$$SNR(dB) = \mathrm{P_r} - 10.\log(N)$$ **Equation 8-7**

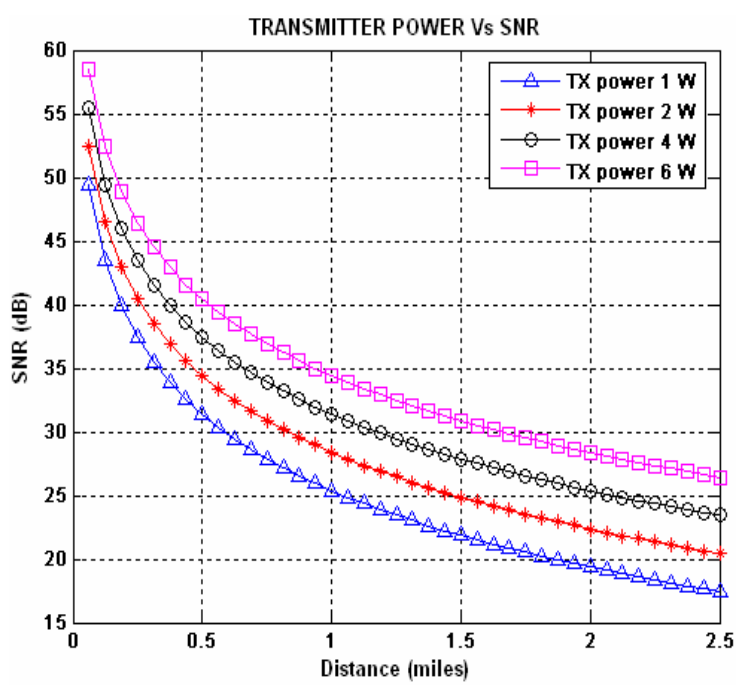

Figure 8-6: Relationship between the transmitted power and received signal SNR as a function of distance of separation between the two.

In the case of analog communications, SNR is often used as a performance criterion as opposed to BER. Analog mobile radio systems typically require an SNR of at least 18 dB. High fidelity FM broadcasting systems require an SNR of at least 30 dB [21].

The BER requirement for a system is driven by the nature of data traffic it is required to communicate. As discussed in Chapter 4, the current system uses UDP/IP packets to transfer data. The maximum size for the UDP/IP packet is 1472 bytes. Thus in order to have a system which can transfer the maximum UDP/IP packet sizes, the permissible BER should be in the vicinity of 10^{-5}. This way an UDP/IP packet of any legitimate length can be guaranteed to be delivered. The theoretical limit on the symbol error probability for different values of SNR can be approximated by Equation 8-8 [22].

Equation 8-8

$$Ps = 4(1 - \frac{1}{\sqrt{M}})Q[\sqrt{\frac{3Es}{(M-1)N}}]$$

where

P_s	=	Noise power
M	=	Boltzmann's constant
		(1.38x 10^{-23} W/K-Hz)
E	=	Ambient Temperature (Kelvin)
BW	=	Bandwidth of the signal (Hz)

Using Equation 8-8, the approximate SNR required for obtaining BER of 10^{-5} using 64 QAM is 26 dB, for 128 QAM it is 29dB and for 256 QAM it is 33 dB. Figure 8-7 shows the theoretical limits on performance of 64 QAM, 128 QAM and 256 QAM.

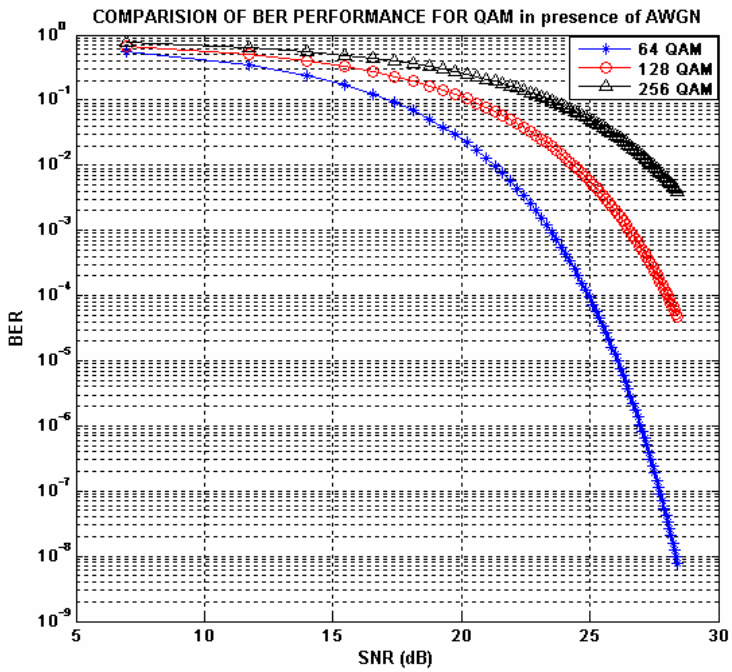

Figure 8-7: Theoretical limits on BER performances of 64 QAM, 128 QAM, 256 QAM.

The performances of the different configurations in presence of AWGN are shown in Figure 8-8 and Figure 8-9.

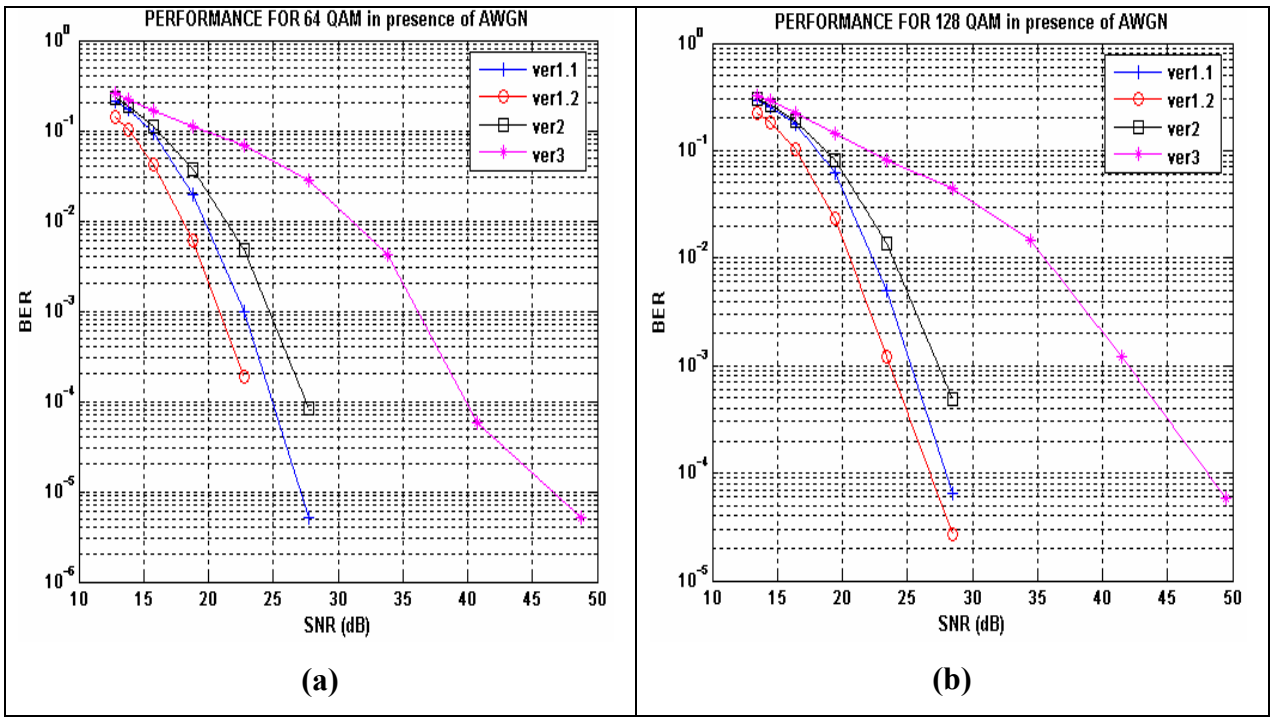

Figure 8-8: Performance of the demodulator in presence of AWGN for (a) 64 QAM Modulation and (b) 128 QAM Modulation.

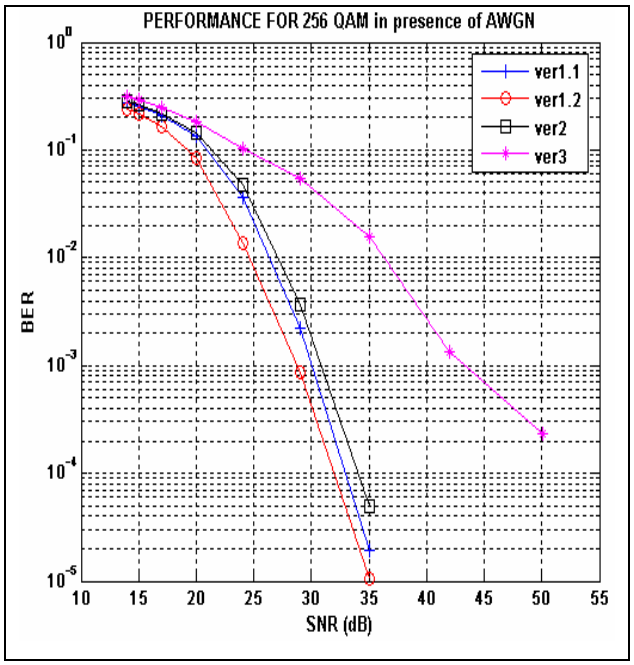

Figure 8-9: Performance of the demodulator in AWGN for 256 QAM

It can be observed from Figure 8-8 and Figure 8-9 that as the bandwidth increases, the performance of the demodulator deteriorates due to the frequency response of the bandpass filter as discussed in Section 8.1.1. For a given modulation scheme, both configurations of Version 1 perform better than Version 2 and Version 3. Version 1.2 gives a better performance than Version 1.1. This is due to the higher sampling rate and the interpolation factor used for Version 1.2 which results in less error in the production of the continuous signal from its discrete time representation. Figure 8-10 shows the mean square error (MSE) value between a single audio band OFDM symbol for Version 1.1 and Version 1.2 as compared with a single audio band OFDM symbol for Version 3. The values for the mean and standard deviation of error for Version 1.1 are 0.0142 and 0.0217 while that for Version 1.2 are 0.0070 and 0.0046 respectively. Thus, due to the higher sampling rate, Version 1.2 has a lower value for mean and standard deviation.

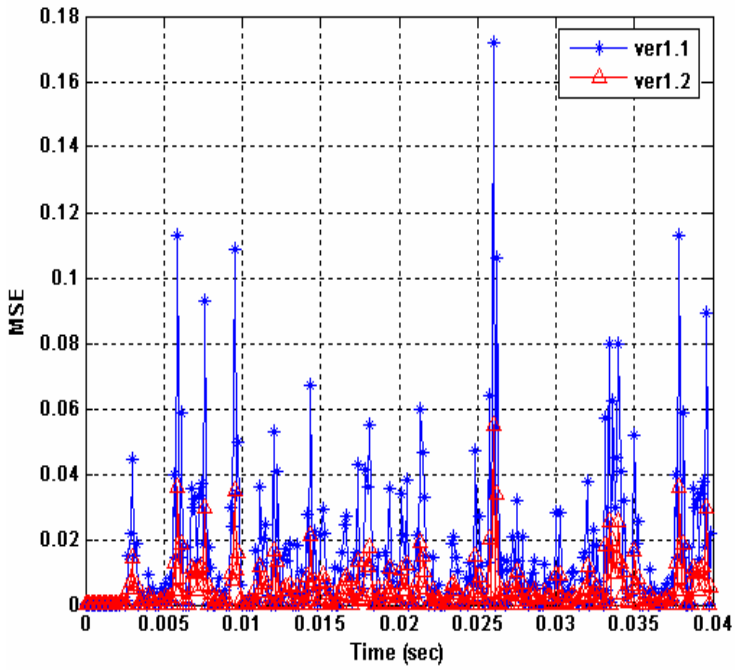

Figure 8-10: Comparison between Version 1.1 and Version 1.2

8.3.2. Performance in presence of Noise and Carrier Phase Incoherency

This section investigates the performance of the demodulator in presence of noise and carrier phase incoherency. As discussed in Section 8.2, each version uses a discrete time representation for the audio band carrier frequency. For Version 1.1, a single audio band carrier frequency cycle is represented by 4 samples. This is equivalent to a phase domain representation at ω=0, $\pi/2$, π, 2*π. Table 8-5, gives the phase domain representation for the audio band carrier frequencies used in different versions.

Parameter	Version 1.1	Version 1.2	Version 2	Version 3
Number of Discreet Samples per cycle	4	6	5	6
ω	0 $\pi/2$ π $3\pi/2$	0 $\pi/3$ $2\pi/3$ π $4\pi/3$ $5\pi/3$	0 $2\pi/5$ $4\pi/5$ $6\pi/5$ $8\pi/5$	0 $\pi/3$ $2\pi/3$ π $4\pi/3$ $5\pi/3$

Table 8-5: Carrier phase representation for all versions.

As described in Chapter 4, the demodulator uses a double window algorithm and correlation to detect the start of the audio band OFDM signal. This ensures synchronization in the time domain. In the current implementation, every sample which is buffered is downconverted by mixing with the audio band carrier frequency. There is no phase lock implementation for the received audio band carrier. Also, there is no mechanism incorporated for correction of the resulting distortion. Figure 8-11 shows the audio band carriers for each version.

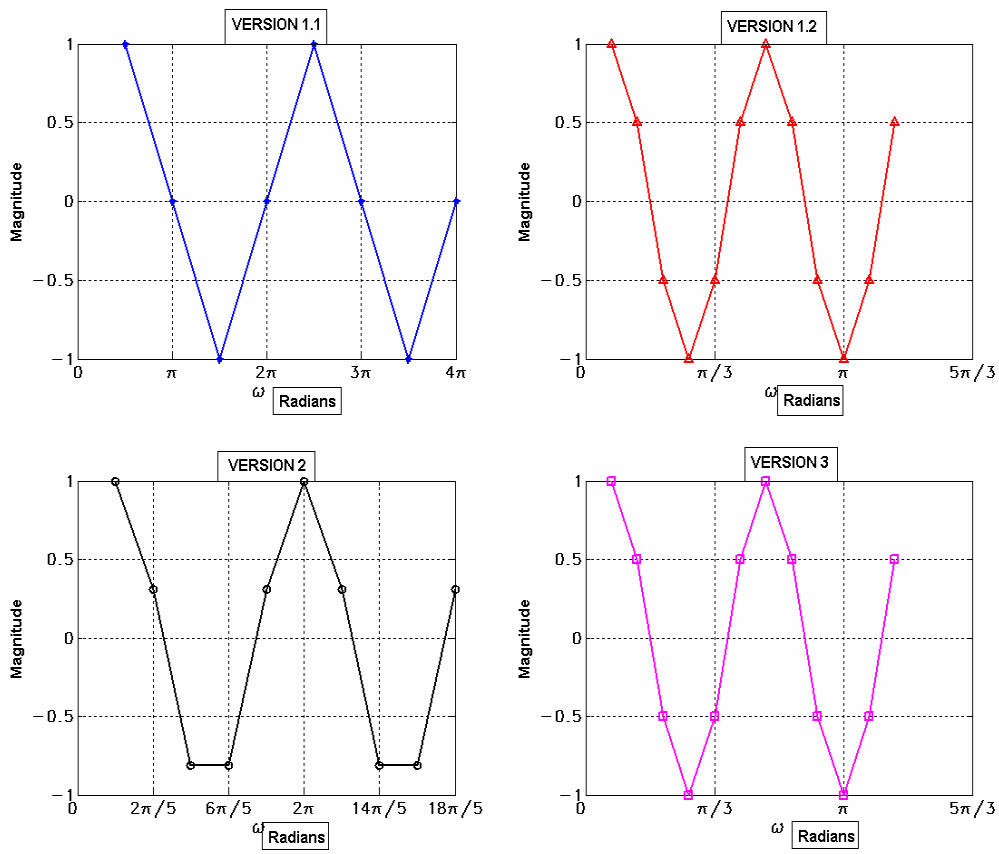

Figure 8-11: Intermediate frequency carriers for all versions.

The effects of carrier phase incoherency on different versions has been analysed assuming that there is no phase distortion due to sampling offsets. Consider the audio band carrier in Version 1.1. For this audio band carrier, the phase incoherency can be of the magnitude of $\pi/2$ or π or $3\pi/2$ radians. Similarly in Version 1.2, the magnitude of

phase incoherencies possible is $\pi/3$, $2\pi/3$, π, $4\pi/3$, $5\pi/3$. Figure 8-12 gives the BER performance for Versions 1.1 and Versions 1.2. For the Version 1.1 no appreciable degradation is observed in performance as compared to phase coherent performance. For Version 1.2, the difference in performance is discernible at higher values of signal to noise ratios (SNR). The degradation is more apparent at phase shifts of $4\pi/3$, $5\pi/3$.

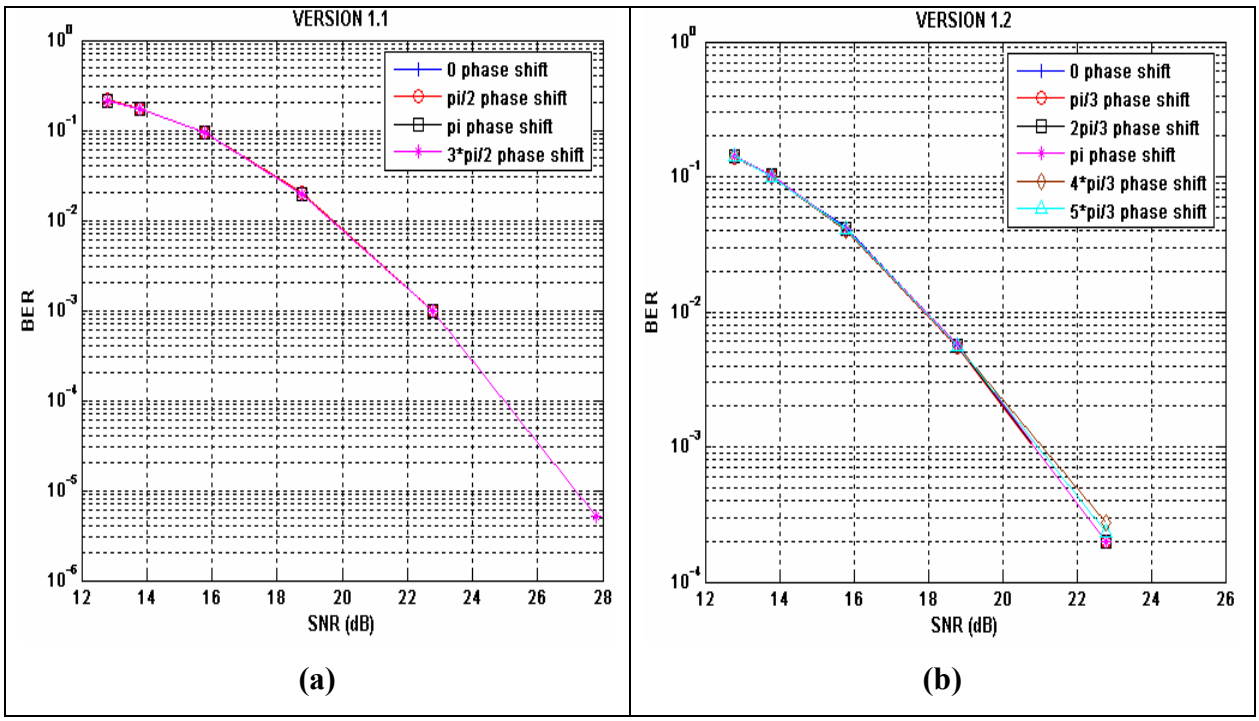

Figure 8-12: Performance evaluation in presence of AWGN and carrier phase incoherency for (a) Version 1.1 and (b) Version 1.2.

Figure 8-13 gives the BER performance for Versions 2 and 3. For both versions, the difference in performance is discernible at higher values of signal to noise ratios (SNR).

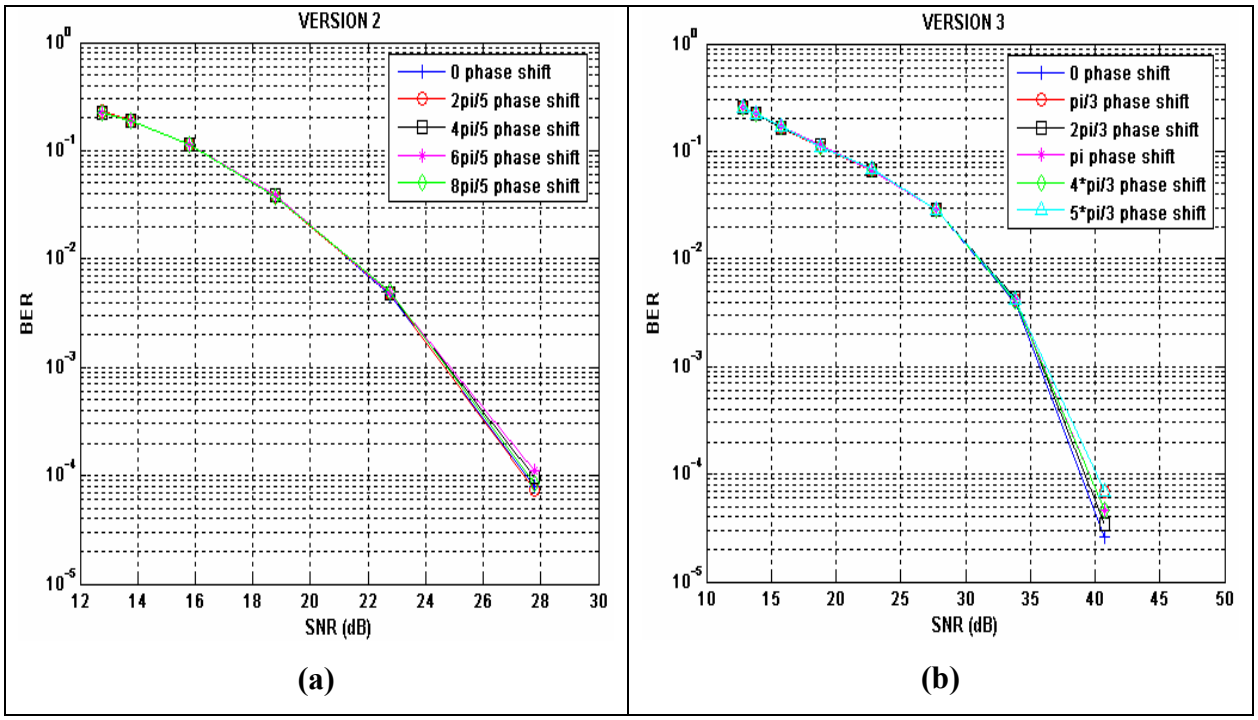

Figure 8-13: Performance evaluation in presence of AWGN and carrier phase incoherency for (a) Version 2 and (b) Version 3.

8.3.3. Performance in presence of Noise and Synchronization errors

This section investigates the performance of the demodulator in presence of noise and synchronization errors. The demodulator synchronizes with the received signal. The synchronization is implemented in two stages viz double window algorithm and correlation algorithm. Chapter 3 introduces with the process of synchronization in detail. In the current implementation, the size of the baseband OFDM symbol is 80. As discussed in Section 8.1, the interpolation factor and the sampling rate govern the size and time domain characteristics of the OFDM symbol. Table 8-6 summarizes the parameters for each version.

Version	Interpolation Factor	OFDM symbol size	Sampling Frequency (KHz)	Sampling Duration (μsec)
Version 1.1	4	320	8	125
Version 1.2	6	480	12	83.33
Version 2	5	400	12	83.33
Version 3	6	480	16	62.5

Table 8-6: Sampling parameters for all the versions.

Figure 8-14 and Figure 8-15 show the performances of the different configurations in the presence of synchronization offsets. In the simulations, the length of the cyclic prefix was fixed to 16 samples which is one fourth the baseband OFDM symbol representation. Also it is assumed that there is no distortion due to sampling offset. As expected the performance deteriorates significantly for higher values of synchronization offset. Consider the case of Version 1.1 which has an audio band OFDM symbol length of 320 samples and an interpolation factor of 4. It will take a synchronization error of the magnitude of 4 audio band domain samples to skip a sample in baseband domain. Table 8-7 summarizes the synchronization offsets simulated.

Audio band frequency Sample offset	Equivalent Baseband Sample offset	Time Domain Equivalent (msecs)			
		Ver1.1	Ver1.2	Ver2	Ver3
0	0	0	0	0	0
20	5	2.5	1.67	1.67	1.25
40	10	5	3.33	3.33	2.5
60	15	7.5	4.99	4.99	3.75
80	20	10	6.66	6.66	5

Table 8-7: Synchronization offsets simulated.

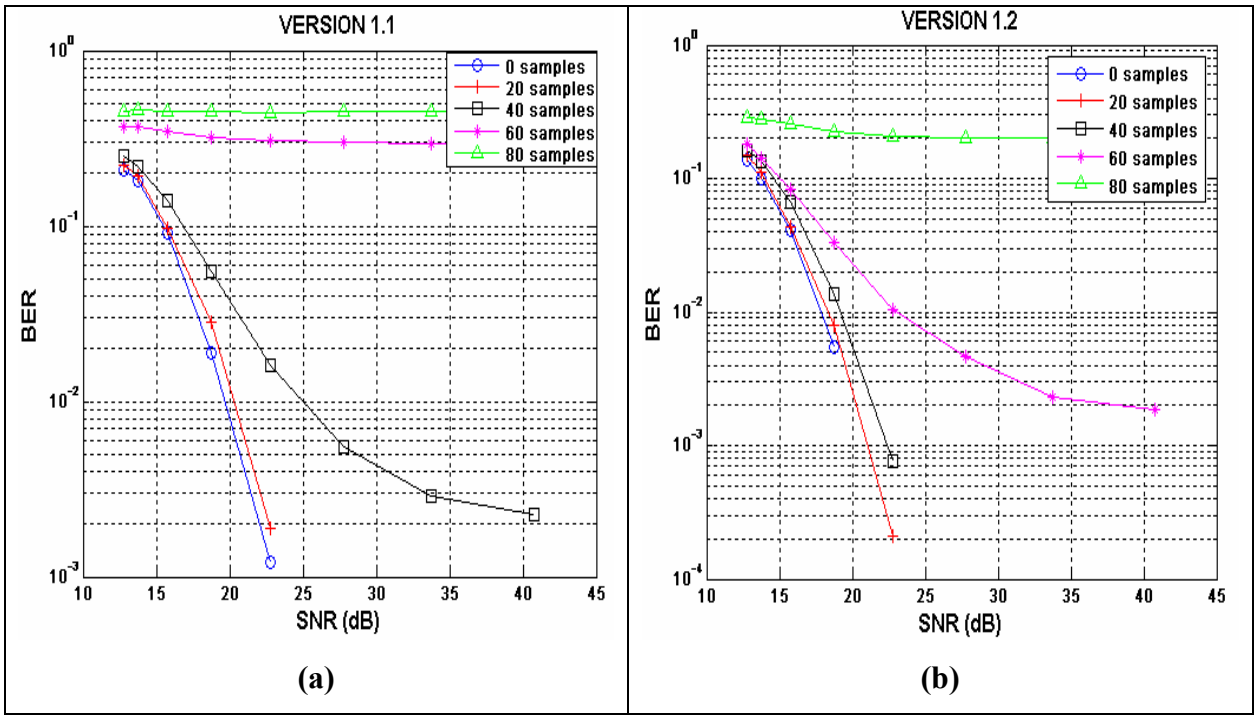

Figure 8-14: Performance evaluation in the presence of AWGN and synchronization offsets for (a) Version 1.1 and (b) Version 1.2.

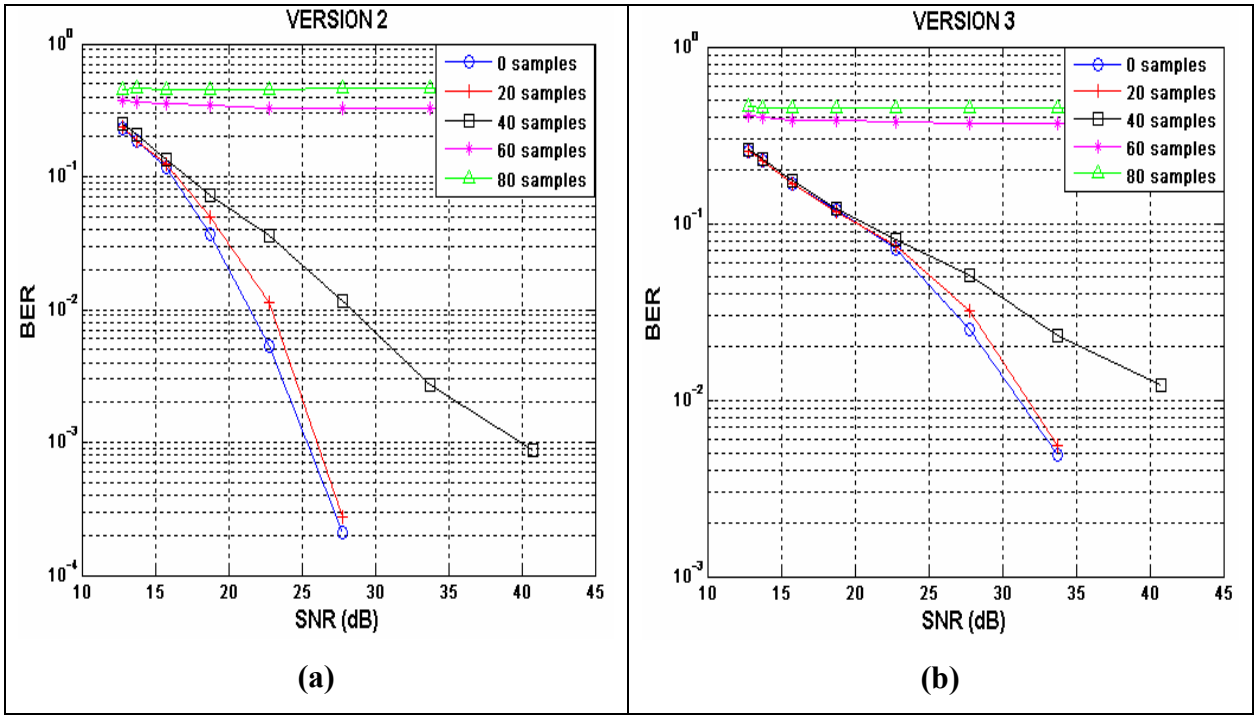

Figure 8-15: Performance evaluation in the presence of AWGN and synchronization offsets for (a) Version 2 and (b) Version 3.

8.4. Performance evaluation using prototype modem

Figure 8-16 shows the final prototype of OFDM Modem and the test setup for outdoor testing. The objectives of these tests were to obtain a rough estimate of the modem performance. As described in Chapter 1, the modems use Ethernet connection to transfer the data to the final source and destination (DTE). One of the ways to evaluate performance of modems will be to measure the packet loss rate of the system. Measuring the packet loss, however does not give a true measure of BER performance. This is because a single bit error or multiple bit errors may be responsible for the packet being corrupted. This discrepancy between packet loss and BER can be minimized by keeping the size of each UDP/IP packet as small as possible. Figure 8-17 (b) shows the java server application used to send packets to the modem. Figure 8-17 (a) shows the java client application which is used at receiving modem. It counts the number of packets received. Calculating the ratio between numbers of packets sent and received gives the percentage packet loss.

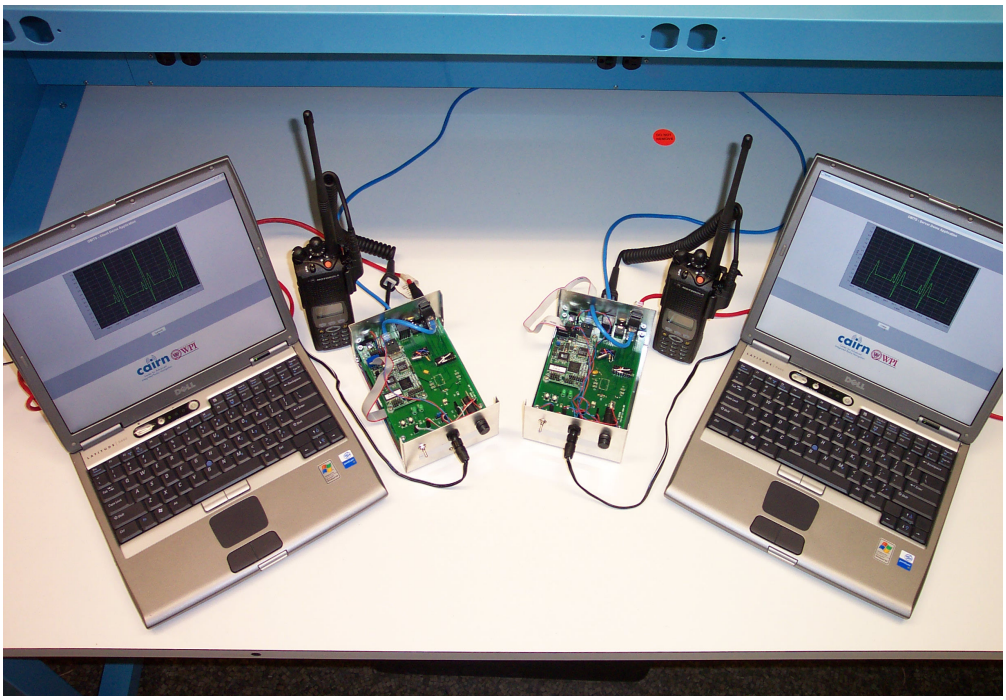

Figure 8-16: OBITS modem test bed.

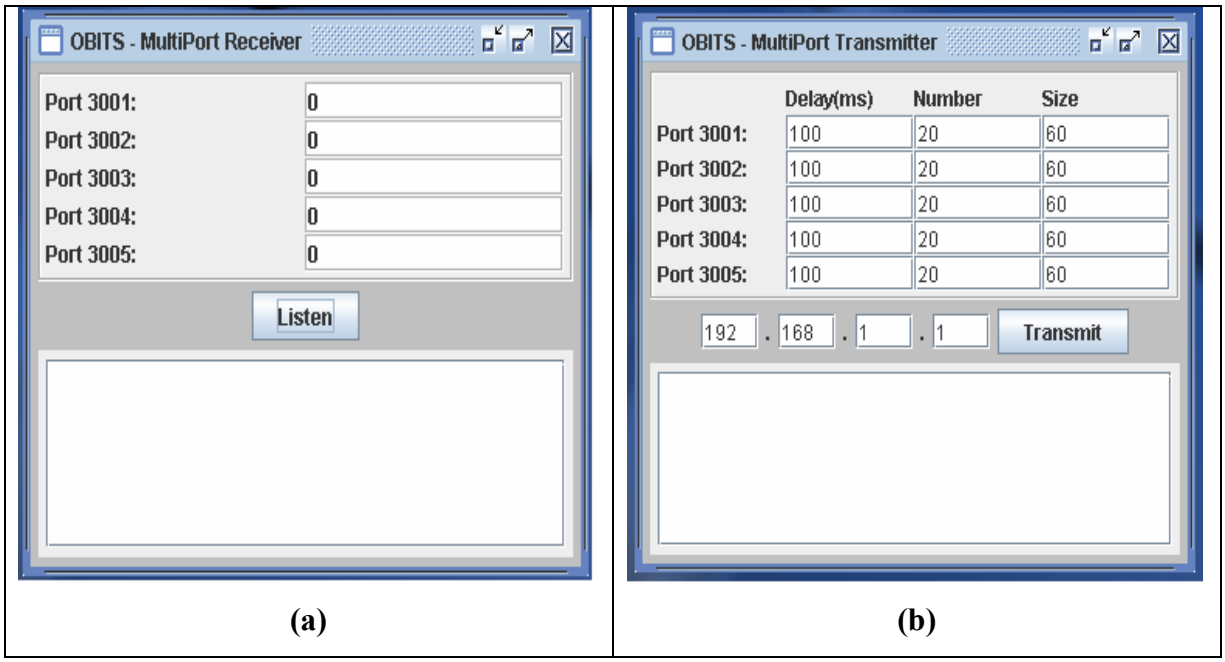

Figure 8-17: Performance measure software, (a) client (b) server.

Figure 8-18, shows the relationship between percentage packet loss and SNR. Different SNR values were obtained using the output attenuator of the codec on EVM, as opposed to the use of the volume control on the radio. Using the codec on EVM gives a better control over the SNR. It can be seen from Figure 8-1 that the percentage of packet loss decreases as signal to noise ratio increases. The packets transmitted, used UDP/IP format and data payload for each packet was restricted to 10 bytes. Table 8-8 tabulates the results obtained.

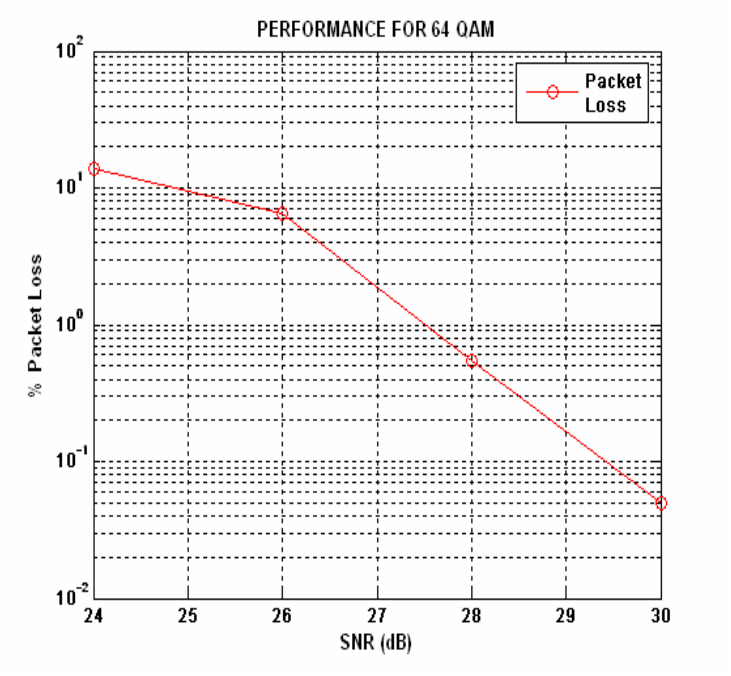

Figure 8-18: Packet loss.

SNR (dB)	% Packets Lost	Maximum BER	Minimum BER
24	13.5	1.3e-1	1.6e-3
26	6.55	6.5e-2	8.18e-4
28	0.55	5.5e-3	6.875e-5
30	0.05	5e-4	6.25e-6

Table 8-8: Packet loss Vs SNR.

The maximum BER seen in Table 8-8 is calculated assuming all the bits in the lost packet were corrupted and the minimum BER is calculated assuming only one error bit per packet lost.

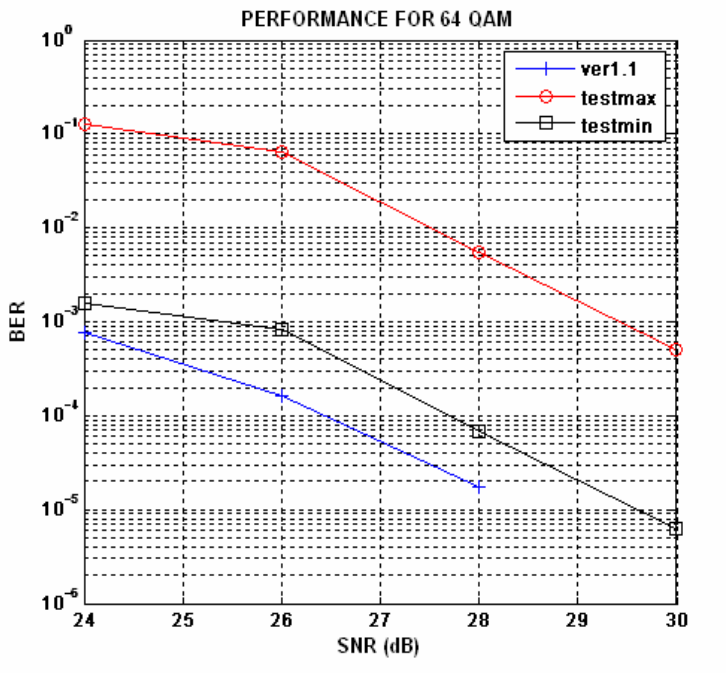

Figure 8-19: Comparison of simulated BER and BER observed using prototype.

Figure 8-19, compares the maximum BER and minimum BER obtained from the test conducted with the BER obtained for version 1.1 in Figure 8-8 (a). As seen from Figure 8-19, there is a discrepancy of about 2 dB between the simulated performance and experimental results. Use of better synchronization and equalization algorithms in conjunction with more realistic modeling of the transfer functions for the radios will yield convergent results.

9. FUTURE WORK

This chapter deals with improvements that can be incorporated in future versions of the modem. Section 9.1 suggests possible improvements in the MAC layer implementation. This section deals with issues regarding the efficiency of transmission and robustness of multiple access protocol. In section 9.2 improvements for the physical layer have been suggested.

9.1. MAC Layer Improvements

The MAC layer implementation was discussed in chapters 5 and 7. There are a number of methods to improve efficiency of the modem by making change to the MAC layer. Sections 9.1.1, 9.1.2 and 9.1.3 describe some of them.

9.1.1. Efficiency of the Transmit Slot

As discussed in Chapter 6, a transmit slot can be subdivided into a TX_KEY interval, a PPDU interval, an Inter-PPDU Interval, an End of Transmit Interval and a TX_UNKEY interval. Figure 9-1, shows the durations for the subintervals of a transmit slot.

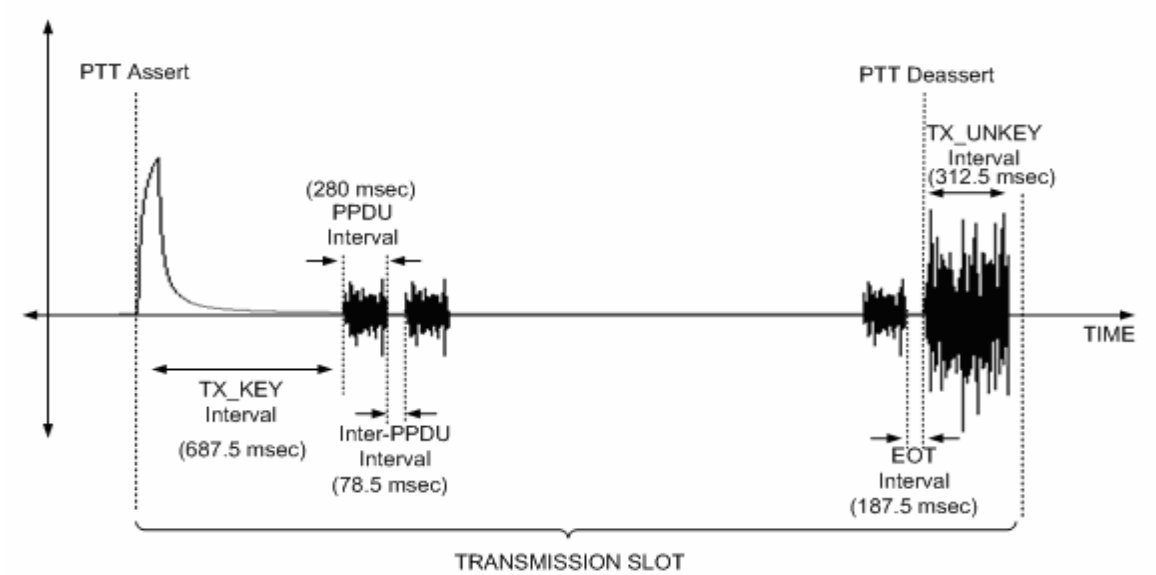

Figure 9-1: Transmit Slot

As was discussed in chapter 6, efficiency of transmission is given by Equation 9-1.

$$\%Efficiency = \frac{DataTime}{TransmissionSlot} \times 100$$ **Equation 9-1**

Where,

$DataTime$	=	Duration of $N \cdot PPDU\_Interval$
$Transmission\ Slot$	=	Duration of $TS\_duration$

The data time represents the interval in which information symbols are transmitted. This corresponds to the interval represented by $N \cdot PPDU\_Interval$. The second section consists of intervals TX_KEY, $(N-1) \cdot Inter\_PPDU\_Interval$, $EOT\_Interval$ and TX_UNKEY during which no information is transmitted over the channel. Specifications of these transmit slot subdivisions for the current implementation is given in Table 9-1.

Interval	Description	Specification
N	Number of PPDU packets	1 ~ 12
TS_duration	Duration of Transmit Slot	(1.546 ~ 5.411) secs
TX_KEY	Duration of TX_KEY Interval	687.5 msecs
PPDU_Interval	Duration of PPDU Interval	280 msecs
Inter_PPDU_Interval	Duration of Inter-PPDU Interval	78.5 msecs
EOT_Interval	Duration of EOT Interval	187.5 msecs
TX_UNKEY	Duration of TX_UNKEY	312.5 msecs

Table 9-1: Transmit slot durations.

The Figure 9-2 shows the relationship between efficiency and number, *N*, of packets per transmit slot.

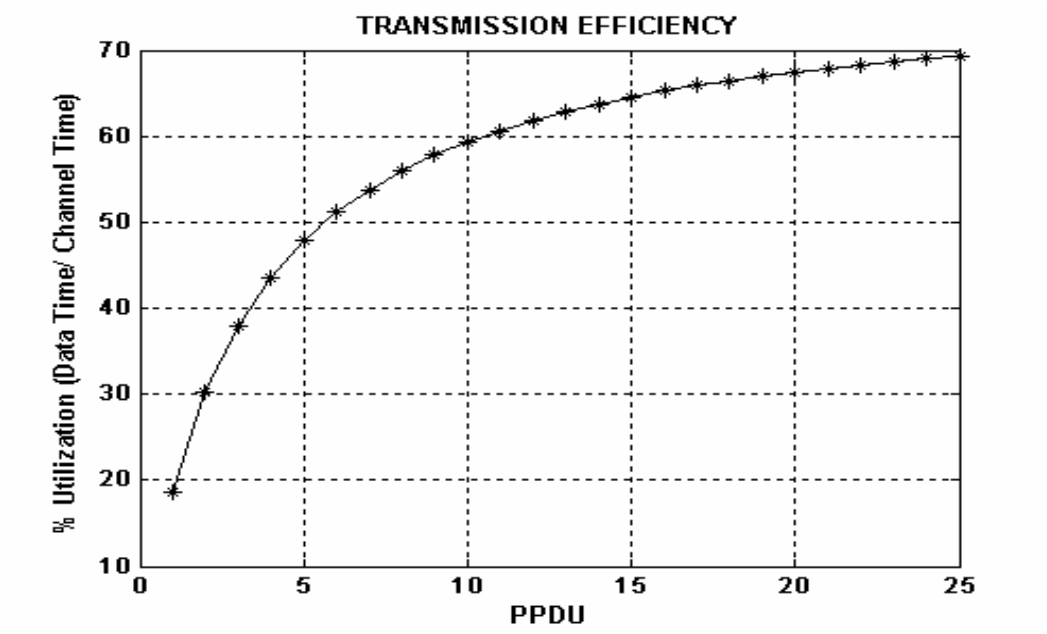

Figure 9-2: Transmit slot efficiency.

The efficiency of transmission will be increased if time during which no information is transmitted is reduced. The *TX_KEY* duration can be reduced by changing the interfacing circuit on the daughter card. As described in Chapter 6, whenever any signal is to be transmitted, the Push to Talk (PTT) switch on the radio must be asserted. On assertion of this switch, the microphone input on a radio serves as an input for transmitting the data. On the receiving end, the receiving radio is unsquelched upon detection of a carrier. This transition from being squelched to being unsquelched generates a transient pulse at the receiving radio. The duration of the pulse depends of the values the RC time constant of passive components used on the daughter card. One way to decrease this interval is to have a lower RC time constant. Another way is to use isolation transformer between the interfacing pins. The pin diagram is shown in appendix I. The *Inter_PPDU_Interval* and *EOT_Interval* can be eliminated by incorporating size of the PPDU information (number of audio band OFDM symbols per PPDU and number of PPDU packets). The *TX_UNKEY* duration can be reduced in same manner as the *TX_KEY* duration.

9.1.2. PPDU Size

As discussed in Chapter 4, each MPDU is broken down into a number of PPDUs. There are two ways of forming a PPDU; one will be fixed length while other one will be variable length. For fixed length PPDUs, the MPDU might be required to be padded with zero bits. As opposed to this, the variable length PPDU adjusts the length of each PPDU to make efficient utilization of the available bandwidth. The only overhead comes in the form of the size information which has to be incorporated in the PPDU header. Figure 9-3 shows the formation of PPDU of both fixed and variable length from a MPDU.

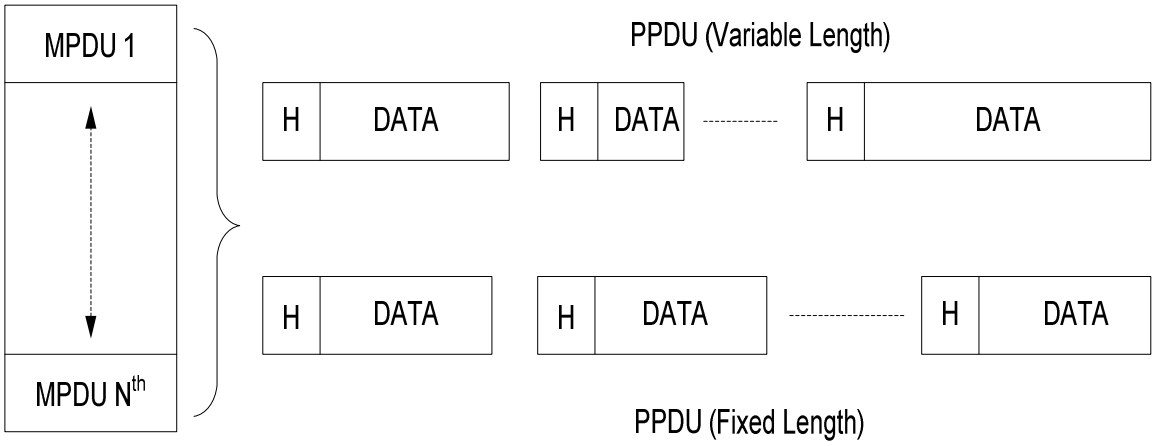

Figure 9-3: PPDU formation.

9.1.3. CSMA/CA Protocol

As described in Chapter 5, the current system has a variation of CSMA/CA protocol implemented. Certain modifications like the bias on back off periods were made in context of DREAMS application. A more detailed analysis is required to obtain a generic protocol.

9.2. PHY Layer Improvements

This section deals with the improvements that can be incorporated in the physical layer.

9.2.1. Modulation Scheme

In Chapter 8, a number of implementations were discussed. The current system implements Version 1.1 which uses 64 QAM signal constellation. The achievable data

rate for this version stands at 12 kbps and the throughput achievable of the radio link is about 3 kbps. The throughput calculation includes the transmit slot efficiency, modulation scheme implemented and the encoding. Using higher modulation schemes like 128 or 256 will increase the achievable data rate and hence the throughput.

9.2.2. Coding Techniques

All the versions discussed in Chapter 8 use convolutional encoding with an encoding rate of ½. Different encoding formats like rate punctured convolutional encoding and block coding need to be tested to optimize the modem performance.

9.2.3. Filter Implementation

As described in Chapter 3, the current system requires interpolation of baseband signal. The two methods commonly implemented are zero-hold and zero-insert interpolation which were described in Chapter 4. A low pass FIR filter is used to perform interpolation. The delay associated with a FIR filter causes phase distortion of the filtered signal. One of the ways to resolve this issue is to implement zero- phase distortion FIR filtered. The required modification and the tradeoff involved need to be explored in future.

9.2.4. Peak to Average ratio (PAR) for audio band OFDM signal

The bandwidth of FM signal depends on the modulation index. As described in Chapter 2, modulation index, β is given by Equation 9-2.

$$\beta = \frac{\Delta_f}{f_m} \qquad \textbf{Equation 9-2}$$

where

Δ_f	=	Deviation (Hz)
f_m	=	Maximum modulating frequency

The deviation, Δ_f , depends upon amplitude of the modulating signal. Thus the amplitude of the generated OFDM signal will influence the bandwidth of the FM signal and hence the performance of the modem. This issue needs to be researched further.

10. APPENDIX A

This appendix introduces the different peripherals and modules of the EVM which are used in executing the software algorithms described in the Chapter 7. The Enhanced Synchronous Serial Interface (ESSI) is used to interface the radio and codec and forms a part of *Interface III*, as described in Chapter 4. In order to facilitate communication over the serial port, the Serial Communication Interface (SCI) is used. Port D, a General purpose Input/Output (GPIO) port is used to perform ancillary functions like PTT assertion. The next sections will explain in detail the working of peripherals and modules used. The peripherals used are shown in Figure 10-1.

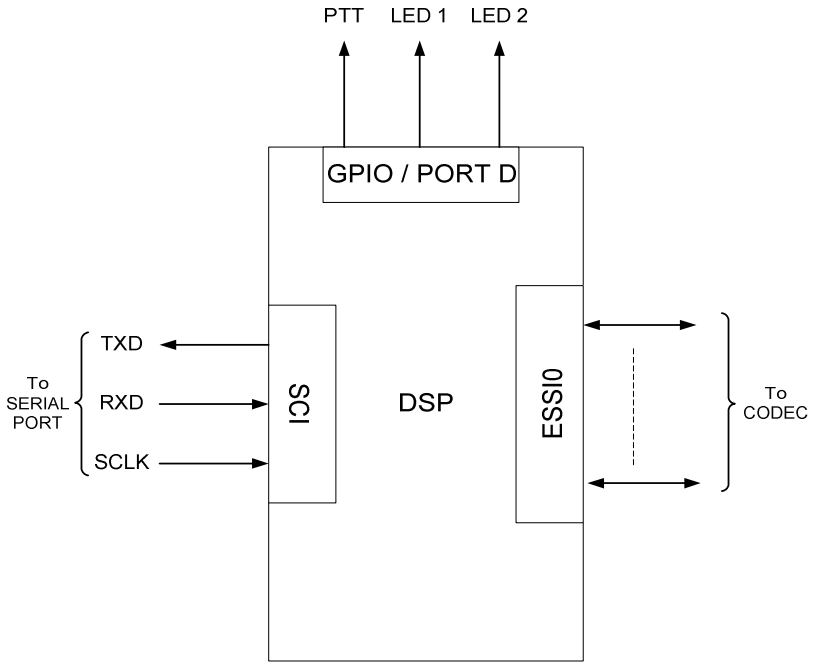

Figure 10-1: Peripherals

1] Serial Communication Interface (SCI):

The DSP 56L307 EVM provides a full duplex port for serial communication with other DSPs, microprocessors, or peripherals such as modems. It supports both synchronous and asynchronous modes of operation. It can be configured for a range of baud rates and can be used in conjunction with an external clock source or an internal clock. For the current system, the SCI interface works at 38.4Kbps, in 10 bit asynchronous mode and has its

baud rate derived from an internal clock. The functioning of the SCI interface is dictated by the contents of SCI Control Register (SCR) and SCI Clock Control Registers (SCCR). The serial interface is interrupt driven.

2] Enhanced Synchronous Serial Interface (ESSI):

The ESSI interface provides a full-duplex serial port for serial communication with a variety of devices including the codecs. There are two ESSI interfaces available on the DSP. For the selected EVM, the interfaces ESSI0 and ESSI1, are both interfaced with a stereo codec. The codec is connected to the VHF radio through an interfacing circuit described in Appendix I. The codec functions in full duplex mode and has two stereo channels, one representing `codec_input` and the other `codec_output`. The mode of operation for the ESSI interfaces is selected by programming the ESSI Control Register A (CRA) and ESSI Control Register B (CRB). This interface is interrupt driven.

The frequency of interrupts depends on the sampling frequency which, for the current implementation, is 8 KHz. The interrupt service routine is executed twice at each sampling time, once for the Right channel and once for the Left.

3] General Purpose Input/Output (GPIO) Ports:

There are four GPIO ports available on the EVM. Each port has a set of bidirectional signals which can be configured as GPIO signals or as peripheral dedicated signals. For the current system, Port E is used for the serial interface, Port C is used for the ESSI interface and Port D provides the ancillary signaling required for interfacing the VHF radio. Two pins of Port D are used to drive two LEDs which indicate the amplitude of received signals. The third pin is used for assertion of PTT switch. In order to use the Ports in GPIO mode, Port Control Register (PxRD), Port Direction Register (PxRD), and Port GPIO Data Register (PxRD) have to be programmed with appropriate values.

4] Timer Modules:

The EVM has three internal timer modules. Each timer has a single signal which can be configured as a bidirectional GPIO signal or as a timer signal. The timers can function as

watchdog timers, pulse-width modulators or can be used as event counters. In the timer mode, the timer generates an internal interrupt when a counter value is reached. The functioning of the timer modules depends on the contents of the Timer Control/Status Register (TCSR), Timer Load Register (TLR), Timer Compare register (TCPR). The current implementation uses timer modules 1 and 2 in the default timer mode. Both the timer modules generate interrupt. Timer module 1 is programmed to generate an interrupt every 131.25 msecs and Timer module 2 every 656.25 msecs.

11. APPENDIX B

This appendix introduces the different external and internal interrupts which are used in executing the software algorithms described in the chapter 7. In addition to the interrupts generated by different modules, the EVM has a provision for four external interrupts viz IRQ A, IRQ B, IRQ C and IRQ D. In the system designed, IRQ A and IRQ D are used. Their purpose is to trigger the debugger mode which was discussed in Chapter 7.

All the interrupts generated are serviced using the Interrupt Service Routine (ISR). Each interrupt can be enabled or disabled individually. In addition, the interrupts can be assigned priorities. The Interrupt Priority Register Core (IPRC) and Interrupt Priority Register Peripherals (IPRP) are used to assign priorities. In the current implementation there are seven Interrupt Service Routines (ISR). They are listed as below:

1] SSIRXHandler (void): This ISR is invoked when codec has data to send to the DSP. Once a sample is received it is stored into an appropriate buffer bank. The banking structure will be explored in detail in Appendix D. In addition to buffering, it also manages the synchronization buffers. This ISR is executed twice each sampling period with each run corresponding to the right or left channel of the stereo codec. It has a level 1 priority.

2] SSITXHandler (void): This ISR is invoked when the EVM has data to send to the codec. The data to be sent is also stored into banks. Similar to the receive ISR, the transmitter ISR routine is executed twice during each sampling period. In the current implementation, depending upon the modem states, (which were described in Chapter7 either `SSIRXHandler (void)` or `SSITXHandler (void)` will be executed. If the Modem is in transmitter routine, SSITXHandler (void) is used while if the modem is in receiver mode SSIRXHandler (void) will be enabled. It has level 1 priority.

3] IRQAHandler (void): This routine services the IRQ A interrupt. The interrupt is generated by an external switch. It is used to trigger the modem into the debugger mode. It has a priority level of 2 which corresponds to the highest priority.

4] IRQDHandler (void): This routine services the IRQ D interrupt. This interrupt is also generated by an external switch. It is used to exit the debugger mode. It has a priority level of 2 which corresponds to highest priority.

5] TM1OVF (void): This routine is used for servicing the interrupts generated by the Timer module 1. The ISR routine sets `overflowflag1`. It has a level 0 priority.

6] TM2OVF (void): This routine is used for servicing the interrupts generated by the Timer module 2. The ISR routine sets `overflowflag2`. It has a level 0 priority.

7] RXHandler (void): This routine is invoked when the EVM receives data byte on the SCI interface. The routine stores the received byte in a cyclic buffer. The interrupt has a priority level of 1.

12. APPENDIX C

This appendix introduces the different functions used in executing the demodulator algorithms described in the Chapter 7. The Figure 12-1 shows the functions used.

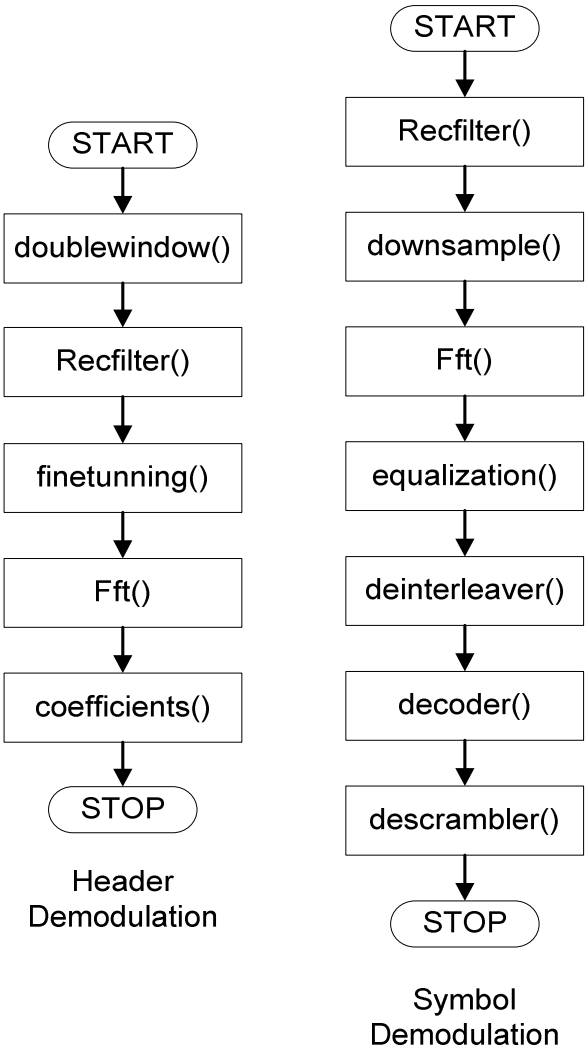

Figure 12-1: Demodulator routine.

1] doublewindow (void): This function implements the double window algorithm which was discussed in Chapter 2. It is also responsible for re-initialization the synchronization banks. The banking structure is described in Appendix D.

2] finetuning (void): This function is called after the signal is detected by the doublewindow() algorithm. In this function, the received signal is correlated with a header template. The sample index, corresponding to the highest correlation is designated as the start of the received signal. Thus `doublewindow (void)` and `finetuning (void)` can be interpreted as coarse and fine tuning mechanisms respectively. In addition to detecting the start, this function also downsamples the signal to obtain the header symbols. Both the `doublewindow (void)` and `finetuning (void)` are used only for synchronization, and hence will be called once for every Physical layer Protocol Data Unit (PPDU).

3] Recfilter (int end, float *bptr): After the start of the received signal is detected, the `Recfilter ()` function is executed to perform downconversion as described in Chapter 3. The results of the downconversion are then passed through a low pass (LP) filter to obtain the baseband signal. These filtered samples are stored in two buffer banks, one corresponding to the in-phase component and other to the quadrature phase component. The banking structure is described in Appendix D. The local arguments needed to be passed to the function are the length of the buffers over which the demodulation operation has to be performed and a pointer to the buffer containing the received samples.

4] downsample (int offset): This function is used to downsample the downconverted signal. The downsampling rate is predefined in the code. The local argument to the function indicates the number of samples in the buffer which form the part of the OFDM symbol.

5] Fft (int isgn): This function is used to calculate the Fast Fourier Transform (FFT) of the downsampled signal. It also calculates the Inverse Fast Fourier Transform (IFFT) depending upon the value of the local argument `isgn`.

6] coefficients (void): The received signal undergoes amplitude and phase distortion due to the channel effects. In order to estimate the channel distortion we use the

`coefficients (void)` function. This function uses the known header data to obtain the initial estimates of the coefficients for the equalizing filter.

7] equalization (void): This function is used to update the channel estimates. It is used in conjunction with the `coefficients (void)` function. This function implements the proportional equalizer structure which was discussed in Chapter 2.

8] demap (void): This function is used to perform data demodulation. The equalized symbols are mapped back into the signal constellation to obtain the binary data. For the current implementation the symbols are mapped back to a point in the 64-QAM constellation.

9] deinterleaver (void): Once the binary data is obtained it is de-interleaved so that the adjacent bits are realigned.

10] decoder (void): As described in Chapter 2, a Viterbi decoder is used to decode the binary data. The inputs to the function are the de-interleaved bits obtained at the end of de-interleaver. The trace back length of the state table used for decoding is 15. The algorithm is described in detail in reference. The `state (void)` function is used to calculate the states of the decoder.

11] descrambler (void): This function is used to descramble the decoded bits. The descrambler equation used is given in Chapter 2.

13. APPENDIX D

This appendix introduces the different banks used in executing the demodulator algorithms described in Chapter 7. Figure 13-1 shows the banking structure used. The banking structure refers to the buffer implementation. The buffers are used to store the samples temporarily. The need for such a structure arises due to the fact that in the current implementation most of the operations are performed on blocks of data. The size of the block generally corresponds to the size of a single interpolated OFDM symbol. It is a function of sampling frequency and the size of FFT used. For the current implementation the size of a single block is 320 samples, for details refer to Chapter 2, 3 and 8. There are three pairs of banks in addition to two independent banks that are used in the receiver implementation. The received signal is buffered every time `SSIRXHandler (void)` interrupt service routine, described in Appendix B is executed.

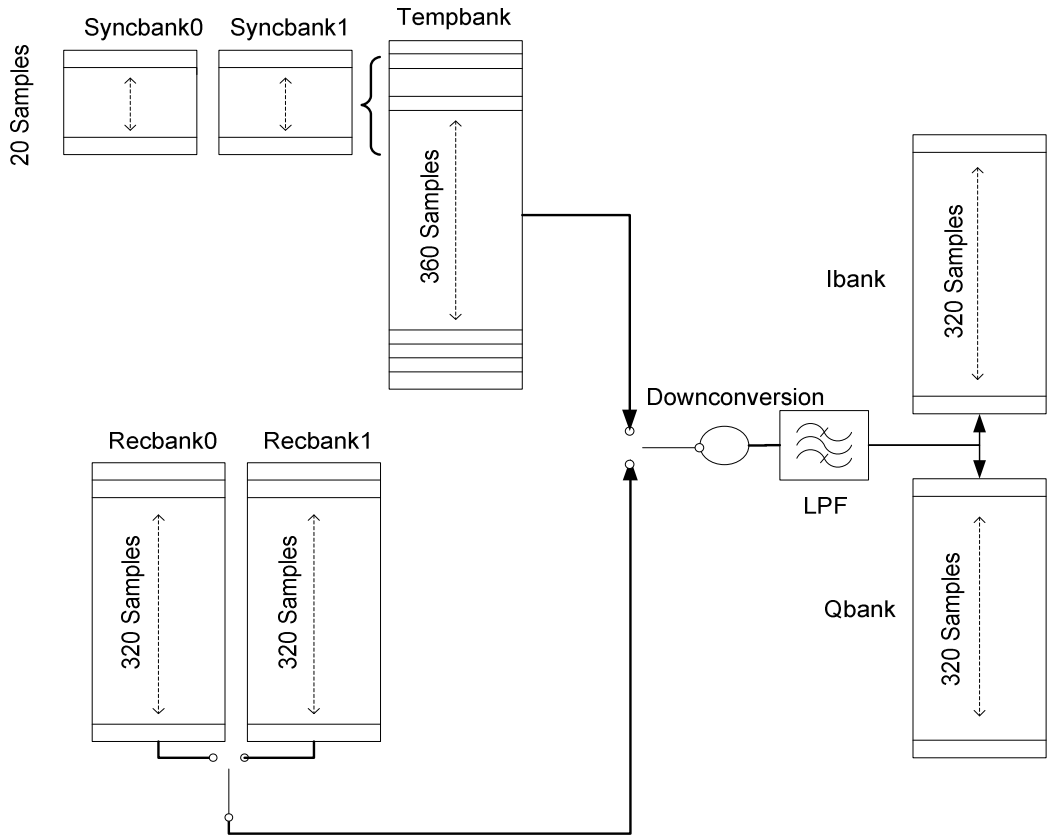

Figure 13-1: Demodulator banking structure.

The samples received at the end of the ISR are buffered in two banks; `Syncbank0` and `Syncbank1`. Each of these banks is 20 samples wide and is filled alternately. The `doublewindow (void)` function calculates the energy of the samples in each of these banks to obtain the SNR. Once the SNR calculated exceeds the threshold, the contents of the `Syncbank0` and `Syncbank1` are transferred to the `Tempbank` buffer. This buffer is 360 samples wide and is used to facilitate fine tuning using correlation. The correlation is calculated over a window of the first 40 samples. After the start of signal is detected, the 320 samples corresponding to the header are extracted and demodulated. The outputs of the demodulator are then filtered. The filtered outputs are stored in `Ibank` and `Qbank`, corresponding to the in-phase and quadrature phase components. The size of `Ibank` and `Qbank` is equal to the size of a single OFDM symbol block. `Syncbanks` and `Tempbank` are used exclusively for synchronization and hence are only used in the initial phase. Once the start of the signal is detected, the received samples which correspond to the data symbols are stored in `Recbank0` and `Recbank1` sequentially. The samples are then demodulated, filtered and stored in the `Ibank` and `Qbank` buffer structures. Thus `Ibank` and `Qbank` are used over the entire length of PPDU transmission.

14. APPENDIX E

This appendix introduces the different functions used in executing the modulator algorithms described in the Chapter 7. Figure 14-1Figure 12-1 shows the functions used.

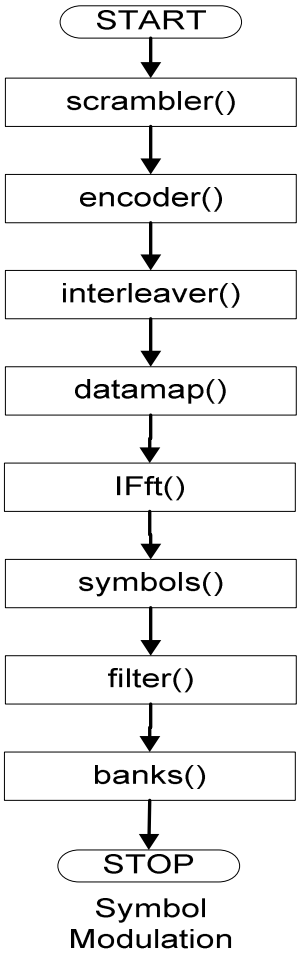

Figure 14-1: Modulator routine.

1] scrambler (void): This function is used to scramble the binary data which is received over the serial port. The scrambler equation is given in Chapter 2.

2] encoder (void): This function performs the convolutional coding on the scrambled data. The details of the convolutional coder used are given in Chapter 2.

3] interleaver (void): This function is used to rearrange the adjacent coded bits. This helps in decreasing the Bit Error Rate (BER).

4] datamap (void): This function maps the binary data into the selected QAM constellation. The mapped symbols are complex with the real part representing the in-phase component and imaginary part representing the quadrature phase component.

5] Fft (int isgn): This function is used to calculate the Inverse Fast Fourier Transform (IFFT) to obtain an OFDM symbol. The same function is used in calculating the FFT, since the both the IFFT and the FFT use the same algorithm. The local argument passed identifies the operation performed. For the FFT operation the value of local argument should be 1 while for an IFFT the value of local argument should be -1.

6] symbols (void): This function is used to append the cyclic prefix at the start of the OFDM data to form an OFDM symbol. For the current implementation the last 16 sample values of the IFFT output are used to form a cyclic prefix. The purpose of appending a cyclic prefix is given in Chapter 2.

7] filter (void): This function is used to perform the interpolation operation. The filter used has 24 coefficients and is implemented in the form of a linear finite impulse response (FIR) filter. The `filter (void)` interpolates the in-phase and quadrature phase components and stores the samples into two buffers: `realoutput` and `imagoutput` which will be described in Appendix F. The filter uses zero-inserting to upsample the baseband signals. Details of this technique have been given in Chapter 2.

8] banks (void): As described in Chapter 4 the codec is used to communicate the data to the radio through the ESSI0 interface. This interface is interrupt driven and the Interrupt Service Routine (ISR) is executed twice every sampling instant. At every sampling instant, data which is stored in buffer banks is transmitted to the radio. The `banks (void)` function is used to perform upconversion and to stack the generated audio band OFDM signal into the appropriate buffers. The implementation of buffer banks is given in Appendix F.

15. APPENDIX F

This appendix introduces the different banks used in executing the modulator algorithms described in the Chapter 7. Figure 15-1 shows the banking structure used.

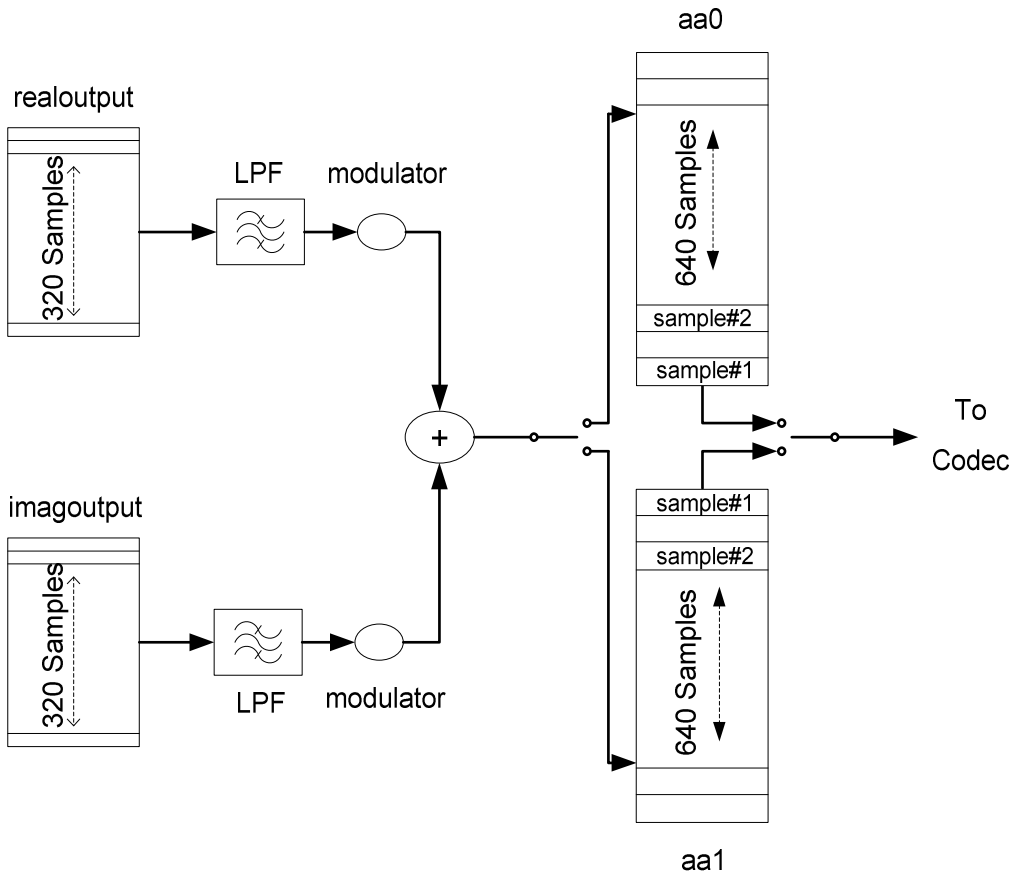

Figure 15-1: Modulator routine.

Analogous to the receiver banking structure, the modulator routine also has a set of buffers which are used for specific purposes. The modulator routine uses two pairs of buffers to store the generated OFDM signal. As described in Chapter 4, the OFDM symbols are interpolated to obtain a baseband representation of the in-phase and quadrature phase components. The in-phase component is stored in the `realoutput` buffer while the quadrature phase component is stored in the `imagoutput` buffer. Each of the buffers is 320 samples wide which corresponds to the size of an interpolated OFDM symbol. These baseband signals are then upconverted by the audio band carrier

frequency and added to generate the audio band OFDM signal representation. This signal is loaded into one of the two banks viz; `aa0` and `aa1`.

As discussed in Appendix A, at every sampling instant, the codec transmits data to the radio over the left channel and the right channel. In the current implementation only the right channel is used. In order to keep the implementation of the interrupt service routine (ISR) simple, the `aa` banks have audio band OFDM samples stored at alternate locations. Thus the size of the `aa0` and `aa1` banks is twice the number of samples per interpolated OFDM symbol i.e. 640 samples wide. The remaining values are initialized to zero. This type of arrangement ensures that the codec will always carry data on one of the two channels.

16. APPENDIX G

This appendix introduces the miscellaneous functions which are used in executing the software algorithms described in Chapter 7. These functions are used in both the routines or are executed during the modem initialization. The functions are given below.

1] states (void): This function is a part of the initialization routine. In order to expedite the data modulation, array structures are used which directly map the binary data into QAM symbols and demap QAM symbols back to binary data. The `states (void)` function is used to initialize these array structures.

2] header (void): This function is used to initialize the header coefficients, filter taps and transmitter banking structure. The header coefficients are used for channel equalization as described in Chapter 2. In addition, these coefficients are also used to generate the baseband representation of the PPDU header. The filter coefficients are used to perform low pass filtering and generate the baseband signals which are stored into respective buffer banks. The transmitter banking structure was described in detail in Appendix E.

3] ADAInit (void): The codec is used to transfer the OFDM signal to the VHF radio. In order to initialize the codec the `ADAInit (void)` function is used. The codec is programmed to function in network mode and work synchronously based on the internal clock.

4] DisableReceiveInt (void): This function is used to disable the codec receive interrupt. The purpose of this function is to ensure that the `SSIRXHandler (void)` is not executed at the sampling instances when the modem is functioning in TX mode (transmit routine). It is called at the beginning of the modulator routine.

5] EnableTransmitInt (void): This function is used in conjunction with the `DisableReceiveInt (void)`. It enables the codec transmit interrupt.

6] EnableReceiveInt (void): It enables the codec receive interrupt. It will be used in the beginning of receiver routine so that `SSIRXHandler (void)` will be executed at the sampling instant.

7] DisableTransmitInt (void): This function is used to disable the codec transmit interrupt. The purpose of this function is to ensure that the `SSITXHandler (void)` is not executed at the sampling instances if the modem is functioning in RX mode. It is called at the beginning of the receiver routine and is used in conjunction with `EnableReceiveInt (void)`.

8] WaitForFrameSyncT (void): This function is used to synchronize the interrupts and the buffer banks in transmitter routine. The codec is programmed to operate in synchronous mode and both the codec interrupts, receive and transmit, occur at the sampling instances. At every sampling instant the ISRs are executed twice corresponding to the right channel and left channel. For the current implementation, the OFDM signal is transmitted on the right channel. The choice of channel influences the `aa` banking structures as discussed in Appendix F. The `WaitForFrameSyncT (void)` `routine` polls the status the Transmit Frame Sync (TFS) bit in the ESSI0 status register. It is called at the beginning of transmission.

9] WaitForFrameSyncR (void): This function is similar to the `WaitForFrameSyncT (void)` and is used in the receiver routine. It polls for the status of the Receive Frame Sync (RFS) bit in the ESSI0 status register.

17. APPENDIX H

This appendix introduces the software flags which are used in executing the software algorithms described in Chapter 7. These flags functions are used in both the routines and during the modem initialization.

1] IrqFlag: Asserted when SWITCH A, shown in the circuit diagram in Appendix I is closed. It is used to exit out of the Main Routine. It gets deasserted when SWITCH B is closed.

2] overflowflag1: It is used by receiver to realize channel inactivity. The flag is set after exactly 131.25 msec.

3] overflowflag2: It is used by the receiver to overcome a false alarm. The flag is set after exactly 656.25 msec.

4] Falsealaramflag: Asserted when overflowflag2 is SET.

5] TXready: This flag is asserted when we receive a response (the number of packets to be transmitted) for a previously transmitted DTR signal (ASCII character ‘a’).

6] CTSflag: This flag is set when we receive a 'Q' from the NetBurner in response to 'R'. The handshaking codes associated with these ASCII characters were discussed in Chapter 5.

7] PreviousMode: This flag is used to signify the previous state/mode for the modem.

8] TXR : This flag is SET when the backoff counter value is reached. This flag is used in the MAIN routine.

9] FDflag: False detection flag. This is SET when we receive the PTT transience.

10] rbflag: Receive buffer flag. This flag is SET when the Receive buffer is full.

11] txflag: Serial Transmit Flag. This flag is SET when the EVM has transmitted 24 bytes of demodulated data to the NetBurner.

12] receivepacket: This counts the number of packets we receive in a single transmission.

13] symbolcounter: This counts the number of symbols we receive per packet.

14] DebugFlag: Indicates assertion of the IrqFlag.

15] headerflag: This flag is used in the Transmit routine to enforce realignment of stereo channel used, at the beginning of every packet transmission.

16] packetnumber: This counter counts the number of packets transmitted per Transmission Slot.

17] serialflag: Serial Receive flag. This flag is SET when the modem receive 24 bytes of serial data from NetBurner to EVM.

18] isr_count_flag: This flag is used to signify emptying of the aa0/1 banks used in the modulator. The banking structure was explained in Appendix F.

18. APPENDIX I

This appendix discusses the design of the design of daughter card and Interface IV. As introduced in Chapter 4, Interface IV is used to interface the EVM and radio. There are three main interfacing lines which need to be connected. They are the microphone input, PTT line and speaker output.

1] Microphone Input:

This is an input signal for the radio. The codec output on the EVM is connected to the microphone input. The output from codec is connected to a potentiometer and dc blocking capacitor. A 10K potentiometer is used to vary the voltage at the input of the microphone pin. If no voltage divider circuit is used there is a possibility that the codec output signal will over-modulate the FM carrier.

2] Speaker Output:

This is an output signal for the radio. It is connected to the codec input on the EVM. Depending upon make of the radio used this signal can be either differential or single ended. For Motorola XTS 5000, it is differential.

3] PTT Line:

This pin is used to assert and de-assert the push to talk switch. The GPIO pin of Port D is connected to the PTT line using a relay.

Schematics and the board layout for the daughter card are shown on subsequent pages.

19. ACRONYMS

LMR	Land Mobile Radio
FM	Frequency Modulation
AM	Amplitude Modulation
HF	High Frequency
VHF	Very High Frequency
UHF	Ultra High Frequency
TCP	Transmission Control Protocol
UDP	User Datagram Protocol
IP	Internet Protocol
OFDM	Orthogonal Frequency Division Multiplexing
DREAMS	Disaster Relief and emergency medical services
PHY	Physical Layer
MAC	Medium Access Layer
OSI	Open Systems Interconnection
NBFM	Narrowband Frequency Modulation
QAM	Quadrature Amplitude modulation
MCM	Multi-carrier modulation
DFT	Discrete Fourier transform
IDFT	Inverse Discrete Fourier transform
FFT	Fast Fourier transform
IFFT	Inverse Fast Fourier transform
WLAN	Wireless Local Area Network
SNR	Signal to Noise Ratio
ISI	Inter-Symbol Interference
DFE	Decision Feedback Equalization
LMS	Least Mean Square
EVM	Evaluation Module
DSP	Digital Signal Processor
BER	Bit Error Rate

DTE	Data Terminal Equipment
DHCP	Dynamic Host Configuration Protocol
PTT	Push To Talk
CSMA	Carrier Sense Multiple Access
CD	Collision Detection
CA	Collision Avoidance
MPDU	MAC Layer Protocol Data Unit
PPDU	PHY Layer Protocol Data Unit
DTR	Data Terminal Ready
RTS	Request To Send
CTS	Clear To Send
AWGN	Additive White Gaussian Noise

20. BIBLIOGRAPHY

1. Milton S. Kiver, "FM Simplified", 3rd Edition, D. Van Nostrand Company, Inc, 1960.
2. http://www.tapr.org/
3. Pete Lunness, "P25 Radio Systems Training Guide", TG-001 1-0-1, August 2005.
4. Reinhold Ludwig, Pavel Bretchko, "RF Circuit Design", Pearson Education, 2000.
5. http://www.dvsinc.com/papers/iambe.htm
6. http://www.motorola.com/content/1,1012,5392,00.html
7. http://www.dreams-project.org/DREAMS/news2.html
8. http://www.faqs.org/rfcs/rfc768.html
9. Herbert Taub, D. Schilling, "Principles of Communication Systems", 2nd Edition, Tata McGraw-Hill Publications Ltd., 1971.
10. George Kennedy, Bernard Davis, "Electronic Communication Systems", 4th Edition, Tata McGraw-Hill Publications Ltd., 1992.
11. S.B. Weinstein, P.M. Ebert, "Data Transmission by Frequency-Division Multiplexing using the Discrete Fourier transform", IEEE Transaction on Communication Technology, Vol. Com-19,No. 5, OCT 1971.
12. Juha Heiskala, John Terry, OFDM Wireless LANS: A Theoretical and Practical Guide, *SAMS Publication,* 2002.
13. http://portal.etsi.org/radio/DigitalAudioBroadcasting/DAB.asp
14. IEEE, "Part 11: Wireless LAN Medium Access Control (MAC) and Physical Layer (PHY) Specifications", IEEE Press, 1999,
15. Haiyun Tang, Lau, R. Brodersen, " Synchronization Schemes for packet OFDM System" , IEEE International Conference on Communication, Vol 5, May 2003.
16. Timothy Schmidl, D. Cox, "Low-Overhead, Low-Complexity (Burst) Synchronization for OFDM", IEEE International Conference on Communications ,Vol 3, June 1996.
17. Jukka Rinne, M. Renfors, "Equalization of Orthogonal Frequency Division Multiplexing Signals," Global Telecommunications Conference, 1994.

GLOBECOM '94. 'Communications: The Global Bridge', IEEE, Pages:415 - 419 vol.1, 28 Nov.-2 Dec. 1994.

18. Ming-Xian Chang, Yu Su, "Performance Analysis of Equalized OFDM Systems in Rayleigh Fading", IEEE Transactions on Wireless Communications, Vol 1, No 4, Oct 2002.
19. H. Sari, G. Karam, Jeanclaude, " Frequency- Domain Equalization of mobile Radio and Terrestrial Broadcast Channels", Global Telecommunications Conference, 1994. GLOBECOM '94. 'Communications: The Global Bridge', IEEE, vol.1, 28 Nov.-2 Dec. 1994.
20. S. Coleri, M. Ergen, A. Puri, A. Bahai, "A study of channel estimation in OFDM Systems", Vehicular Technology Conference, 2002. Proceedings, Volume: 2, Sept. 2002.
21. K. Pahlavan, A. Levesque, "Wireless Information Network", 1st Edition, Wiley Publications, 1995.
22. John Proakis, "Digital Communications", 4th Edition, McGraw-Hill Publication, 2001.
23. R. Chassaing, "DSP Applications using C and the TMS320C6x DSK", Wiley Publications, 2002.
24. G. Clark, "Error correcting coding for digital communications", Plenum Press, 1981.
25. Tanenbaum, "Computer Networks", 4th Edition, Prentice-Hall,2002.
26. http://www.faqs.org/rfcs/rfc793.html.
27. W. Stallings, "Data and computer communications", 7th Edition, Prentice Hall, 2003.
28. Bob O'Harr, Al Petrick, "802.11 Handbook: A designer's Companion", IEEE Press, 1999.
29. http://www.faqs.org/rfcs/rfc2131.html.
30. Gaith Hammouri , "Obits Modem: Netburner Daughter Card Interface", WPI, 2005.
31. T. Rappaport, " Wireless Communications", Prentice Hall, 1996.

32. John Proakis, D. Manolakis, “Digital Signal Processing”, 3rd Edition, Prentice Hall, 2002.
33. Simon Haykin, “Adaptive Filter Theory”, 3rd Edition, Prentice Hall, 1996.