Worcester Polytechnic Institute
Digital WPI

Major Qualifying Projects (All Years) | Major Qualifying Projects

April 2010

Hydraulic Series Hybrid Baja Car

Alex James Hansen
Worcester Polytechnic Institute

Daniel F. Mittelman
Worcester Polytechnic Institute

Eric Bernard Weiland
Worcester Polytechnic Institute

Ryan James Weaver
Worcester Polytechnic Institute

Shawn Richard Wilhelm
Worcester Polytechnic Institute

See next page for additional authors

Follow this and additional works at: https://digitalcommons.wpi.edu/mqp-all

Repository Citation
Hansen, A. J., Mittelman, D. F., Weiland, E. B., Weaver, R. J., Wilhelm, S. R., & Coletta, T. E. (2010). *Hydraulic Series Hybrid Baja Car*. Retrieved from https://digitalcommons.wpi.edu/mqp-all/1930

This Unrestricted is brought to you for free and open access by the Major Qualifying Projects at Digital WPI. It has been accepted for inclusion in Major Qualifying Projects (All Years) by an authorized administrator of Digital WPI. For more information, please contact digitalwpi@wpi.edu.

Author
Alex James Hansen, Daniel F. Mittelman, Eric Bernard Weiland, Ryan James Weaver, Shawn Richard Wilhelm, and Thomas E. Coletta

This unrestricted is available at Digital WPI: https://digitalcommons.wpi.edu/mqp-all/1930

Hydraulic Series Hybrid Baja Car

A Major Qualifying Project Report

Submitted to the Faculty of

WORCESTER POLYTECHNIC INSTITUTE

in partial fulfillment of the requirements for the

Degree of Bachelor of Science

in Mechanical Engineering

by

Alex Hansen

Shawn Wilhelm

Tom Coletta

Dan Mittelman

Ryan Weaver

Eric Weiland

Date: 4/29/2010

Approved:

_____

Professor James D. Van De Ven, Major Advisor

_____

Professor Kenneth A. Stafford, Major Advisor

Abstract

The Baja SAE competition is held annually by the Society of Automotive Engineers (SAE) in order to give students an opportunity to design and build a competitive off-road vehicle. In this competition every team uses the same 10 HP Briggs and Stratton engine. In order to gain a competitive advantage over teams using traditional mechanical drive trains, this MQP designed and implemented a hybrid-hydraulic drive train in an existing Baja car. This system allows the car to continuously run its internal combustion engine at maximum power and store any excess energy generated by the engine for later use at the driver's discretion. It is located in series with the engine and main drive shaft and consists of a hydraulic pump, motor, and accumulator. Once assembled this system was field-tested to verify design calculations and prove the benefit of the system.

Acknowledgements

We would like to acknowledge the companies and people that have provided us with equipment, advice, and timely service. Hydro Gear has been an asset in creating this system by recommending and donating the proper pump and motor setup as well as helpful discounts. An additional special thanks to Heath McCormick from Hydro Gear for his assistance.

Parker Hydraulics was kind enough to lend us a carbon fiber accumulator that matches our needs for pressure storage. Without this accumulator we would not be able to pressurize the system to our desired limits due to cost limitations.

Omni Services were integral in designing the hoses for this system. A unique application such as this is not an endeavor every company wants to be a part of. They were willing to build these hoses to our specification in a timely manner.

Another special thanks goes to Wayne Partington for his help in developing the simulation and in understanding hydraulic systems. A final thank you goes to our advisors Professor Kenneth Stafford, Professor James Van de Ven, and Professor Torbjorn Bergstrom who have guided us through our project.

Table of Contents

Introduction 1

Background Research 3

How it Works 6

Flow Diagram 6

Engine – Pump 7

Accumulator 9

Motor 11

Conceptual Design 13

Simulation and Part Selection 18

Simulation 18

Part Selection 25

Pump 25
Motor 27
Accumulator 28
Pressure Relief 30

Hose Design 31

Energy and Power 37

Thermal Losses 37

Mounting and Design 44

Engine Mounting Plate 44

Final Drive Train 44

Gear Reduction 44
Sub-frame 46
Chain Tension 47
Parallel Plate 47
Assembly 48
Reservoir Design and Mounting 50
Accumulator Mounting 52
Control System 55
Results 59
Initial Experimentation 59
Dynamometer Testing 61
Recommendations 64
Conclusions 66
Appendix A 68
Appendix B 76
Appendix C 80
Works Cited 82

Table of Figures

Figure 1: Flow Diagram 6

Figure 2: Hydraulic Pump Concept 7

Figure 3: Charging Accumulator: Limiting Motor Concept 9

Figure 4: Releasing Accumulator: Increasing Motor Demand Concept 10

Figure 5: Hydraulic Motor Concept 11

Figure 6: Flow Schematic, First Iteration 13

Figure 7: Flow Schematic, 2nd Iteration 14

Figure 8: Flow Schematic, 3rd Iteration 15

Figure 9: Flow Schematic, 4th Iteration 16

Figure 10: Final Schematic 17

Figure 11: Pump Module 18

Figure 12: Pump vs. Displacement Curve 19

Figure 13: Motor Module 20

Figure 14: Motor Displacement vs. Speed Curve 20

Figure 15: Accumulator Module 21

Figure 16: Output Speed Module 21

Figure 17: Simulink System 22

Figure 18: Uncharged Power vs. Time Curve 23

Figure 19: Charged Power vs. Time Curve 23

Figure 20: Final System Assembly 34

Figure 21: Hose Fitting angles 35

Figure 22: Engine Mounting Plate CAD 44

Figure 23: Sub-frame 46

Figure 24: Chain Tensioning 47

Figure 25: Drive-train Cross Section 48

Figure 26: Exploded View of Sub-Frame Assembly 49

Figure 27: Accumulator Mounting 52

Figure 28: Clamp Bracket 53

Figure 29: Base Bracket 53

Figure 30: Mounted Accumulator 54

Figure 31: Electronic Control System 55

Figure 32: Pump Displacement Control 57

Figure 33: Vehicle Dashboard 57

Figure 34: Vehicle At New England Dyno 62

Table of Tables

Table 1: Pump Specifications 26

Table 2: Motor Specifications..... 28

Table 3: Hose Pressure Drops..... 32

Table 4: Data From Dynamometer 62

Table of Equations

Equation 1: Shaft Work 7

Equation 2: Pump Power Out 8

Equation 3: Flow From Pump 8

Equation 4: Motor Power In 11

Equation 5: Motor Power Out 12

Equation 6: Torque at Motor 27

Equation 7: Orifice Equation 33

Equation 8: Orifice Equation Rearranged 33

Equation 9: Darcy's Equation 33

Equation 10: Reynolds Number Calculation 34

Equation 11: Pressure Loss in Hoses 37

Equation 12: Head Loss 38

Equation 13: Minor Losses 38

Equation 14: Total Head loss 39

Equation 15: Power at Pump 39

Equation 16: Power Lost at Pump 39

Equation 17: Flow from Pump 39

Equation 18: Displacement of Pump 40

Equation 19: Power at Motor 40

Equation 20: Power Lost at Motor 40

Equation 21: Heat Lost Due to Pump and Motor 40

Equation 22: Total Power Lost 40

Equation 23: Reservoir Heat Dissipation 41

Equation 24: Overall Heat Transfer Coefficient 41

Equation 25: Heat lost by Oil in Reservoir 41

Equation 26: Heat Transfer Coefficient Example 42

Equation 27: Heat Dissipated by Reservoir Example 42

Introduction

SAE Baja is a design competition that encourages students to develop and build an off road vehicle that can withstand the rigor of rough terrain and sometimes water. The competition originated in 1976 at the University of South Carolina. Participants are faced with the challenge of manufacturing and promoting the vehicle; tasks similar to those that would be asked of them in the industrial market. Every team is in competition with one another to have their vehicle chosen by the judges who pose as a company choosing their investment. Generating financial support is important for each team in order to meet the high standards of the competition and their own design goals. This project challenges students in not only design and manufacturing, but commercial promotion. All Baja vehicles must be powered by the same Briggs and Stratton Intek Model 20 engine. Each team begins the design phase with the same engine and modifications are not allowed. This encourages each team to develop innovative designs for their respective vehicle to utilize the power from the engine as efficiently as possible. This is what measures success among the SAE Baja competition. Dynamic competitions can include events such as hill climbs, chain pulls, maneuverability, rock crawls, suspension and traction events, floatation, and a 4 hour endurance race.

This MQP proposes a system never before implemented in SAE Baja. Rather than assembling a conventional engine to a transmission (CVT or otherwise), a Series Hybrid-Hydraulic Drive train will be installed. The 10 horsepower Briggs and Stratton motor will power a pump which will provide a pressure and flow to a hydraulic circuit. The pressurized fluid will flow to a hydraulic motor which will then convert that back to mechanical power to turn the output driveshaft. Between these two points is an accumulator which can store any unused flow

during the operation of the pump and the motor. As fluid enters into the accumulator, it presses against a gas filled bladder and increases the pressure of the system. With more pressure available, the motor's displacement can be increased and the stored energy can be released to provide an instantaneous boost of torque and speed.

The goal of this project is to use as much energy provided from the engine as possible. This is done by constantly running the engine at peak power and storing any of this unused energy as hydraulic pressure. Additionally, energy wasted during braking will be stored through a regenerative braking system incorporated into the drive train.

Due to the nature of hydraulic components, the success of this drive train will rely heavily on properly sizing each component, as well as selecting the correct displacement for the pump and motor. In addition to a critical analysis of the range of torque and speed desired, sizing the components will require extensive simulation which will be discussed in later sections.

Background Research

Hydraulic series hybrid systems have become more and more popular in the energy saving craze. Electric hybrids are commercially popular and the public has become quite comfortable driving them. In fact, when the term “hybrid” is used, most automatically think of gasoline electric. In truth, hybrid just means that two sources of power are used together to move a vehicle. In a gasoline electric hybrid, an electric motor can assist an internal combustion engine in order to drive the wheels. In a series gas-electric hybrid, only the electric motor powers the wheels while the gas engine provides energy for the electric motor. A hydraulic series hybrid uses only hydraulic power to turn the wheels, while another source powers the pump in the hydraulic system. In this case, the other source is an internal combustion engine.

This hydraulic technology has been explored in the automotive industry as a way to increase vehicle efficiency. The benefit of these systems is the ability to store energy. When a car sits at a red light at idle, the energy produced by the engine is wasted through exhaust. None of that energy was converted into mechanical energy to power the car. A hydraulic series hybrid can continue to store energy in an accumulator while the car is at rest. Once the accumulator is pressurized, the gasoline engine can shut off. At the time when the driver wants to start moving again, the stored energy is used to propel the car forward. These systems also have the ability to capture kinetic energy and store it for later use through regenerative braking. A car only utilizing disc brakes cannot recover any of the energy lost in braking. The kinetic energy of the wheels is converted to thermal energy through friction and is lost as heat.

UPS has deployed limited numbers of delivery trucks that run on a hydraulic series hybrid power train. They claim to achieve a 50% greater fuel economy and have reduced emissions by 40%. Implementing these systems on large trucks that often see stop and go action

such as delivery trucks or sanitation trucks could greatly improve fuel economy and reduce brake wear. As an example, regenerative braking could be very advantageous on a sanitation truck or other large commercial vehicles which make frequent stops. Each time the vehicle hits the brakes, energy which normally would be lost is converted to fluid pressure which can be later be used to accelerate. This added efficiency cuts down on gasoline consumption. (U.S. Enviornmental Protection Agency, 2009)

Other colleges have done research into systems like this. A group of students at the University of Idaho researched hydraulic series hybrid drive train systems in order to lower emissions on large vehicles such as refuse trucks. They used a 1988 ford F350 and installed large accumulators in order to store energy in the form of pressure. The goals for their study were to prove that with the use of regenerative braking emissions can be significantly reduced. (Michael Shurtliff, 2005)

Series hybrids are not the only solutions for hybrid problems. There are also parallel hybrids which allow two different power sources to drive the wheels directly. This requires a more complex transfer mechanism so that each power source can provide torque to the wheels. Mild parallel hybrids for example generally use the electric motor only to assist in starting motion. A power split parallel hybrid can use any distribution of power between the two sources. This means that in a gasoline electric hybrid, the gas engine could provide 60% and the electric motor can provide 40% or anywhere in between. When extra power is needed, both power sources can operate at maximum power to increase the total output.

Most of these systems are developed simply to save fuel, reduce cost, and reduce emissions. Few are developed in order to provide increased performance. The benefit of a

pressurized system is not only to be able to store energy lost while braking, but to store energy and ultimately use it to gain more power than the initial power source could output alone. In essence, stored energy allows a vehicle to have the power of a muscle car on demand for a short period of time, while maintaining the fuel economy of a mild compact car.

How it Works

Flow Diagram

To gain an adequate understanding of the workings of the proposed drive train, it is essential to understand the direction of fluid flow in the system. Figure 1 shows a basic schematic detailing the locations of the components in relation to each other and desired direction of flow.

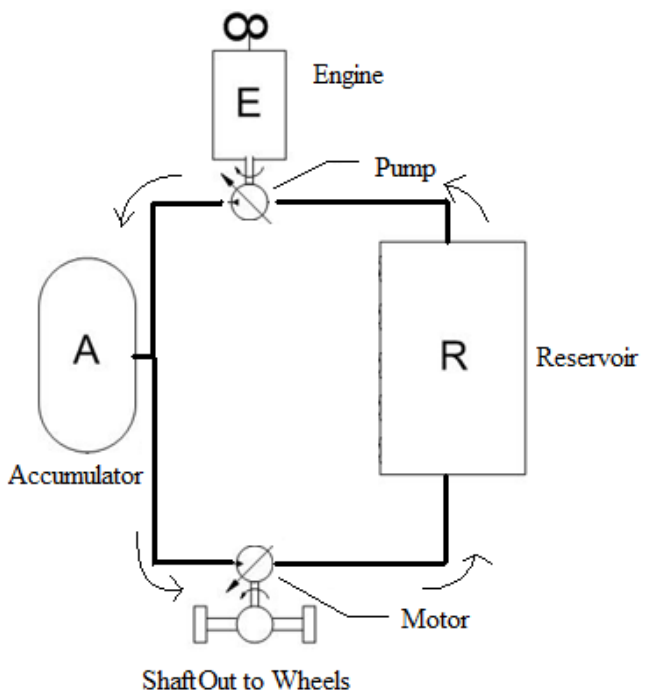

Figure 1: Flow Diagram

Engine – Pump

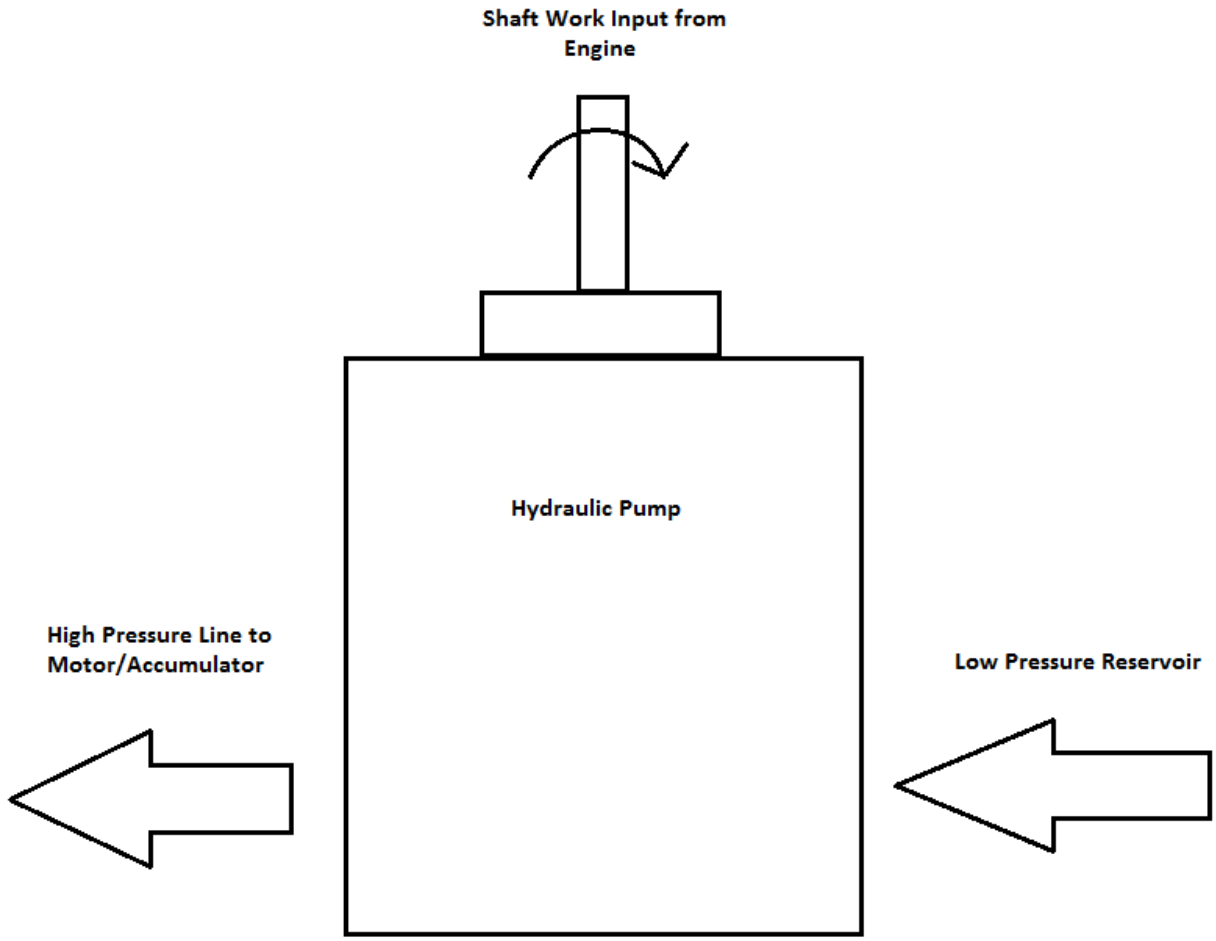

Figure 2: Hydraulic Pump Concept

The 10 horsepower Briggs and Stratton motor will power the hydraulic pump to begin the hydraulic circuit, as seen in figure 2. The engine provides an initial torque (T) and angular velocity (ω).

$$T * \omega = Engine\ Power\ Out$$

Equation 1: Shaft Work

The hydraulic pump utilizes this shaft work to create a flow (Q) and pressure (P).

$$Pump\ Power\ Out = \Delta P * Q$$

Equation 2: Pump Power Out

The pump does this by creating a pressure differential which pulls fluid from a reservoir at atmospheric pressure and pushes it towards the hydraulic motor and accumulator. The volumetric flow rate out of the pump is controlled by the displacement of the pump (D_{pump}) and the speed of the input shaft, which is directly coupled to the engine output shaft. The pump used for this case has variable displacement, meaning it has the ability to change the amount of fluid moved by one revolution of the input shaft. To move more fluid in a single rotation requires a greater input torque. The flow from the pump can be expressed as

$$Q = \mathrm{x} * Dpump * \omega$$

Equation 3: Flow From Pump

In this equation x represents the fraction of full displacement the pump is using. This flow is then passed through hoses to a junction that is connected to a hydraulic motor, accumulator and relief valve. Flow through this junction is dictated by the displacement of the motor (D_{motor}).

Accumulator

Pressure in the system is regulated by the accumulator, illustrated in figures 3 and 4.

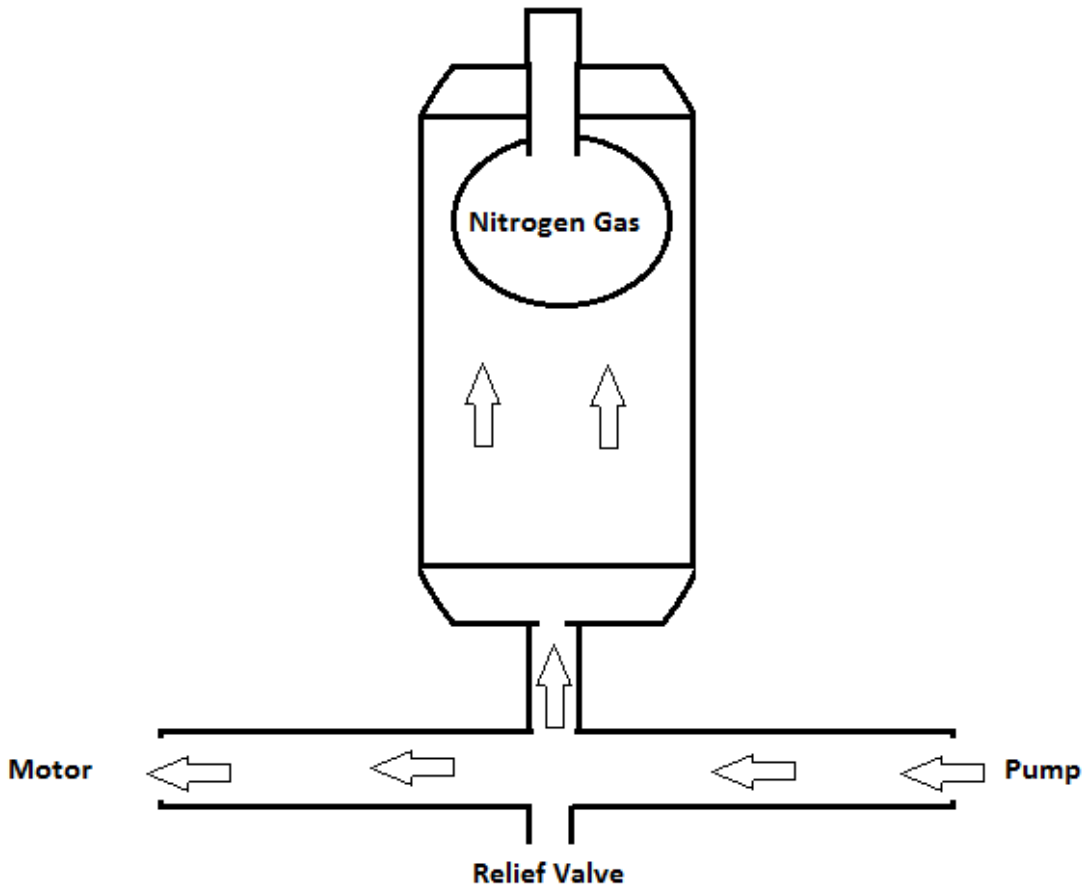

Figure 3: Charging Accumulator: Limiting Motor Concept

The accumulator and the motor are responsible for accepting the flow from the pump. When the driver limits the displacement of the motor, the load from the wheels will prevent the motor shaft speed from increasing. When this happens the motor cannot accept all the flow from the pump and oil is forced into the accumulator. Inside the accumulator is a bladder filled with Nitrogen gas pressurized to an initial 1500 psi. The fluid forced into the accumulator compresses this bladder and increases the pressure in the system.

Once the accumulator has stored hydraulic fluid, the driver can increase the displacement of the motor to greater than normal levels. Normally the system could not provide enough fluid and pressure to spin the motor at this higher displacement, but now the motor can use the energy stored by the accumulator.

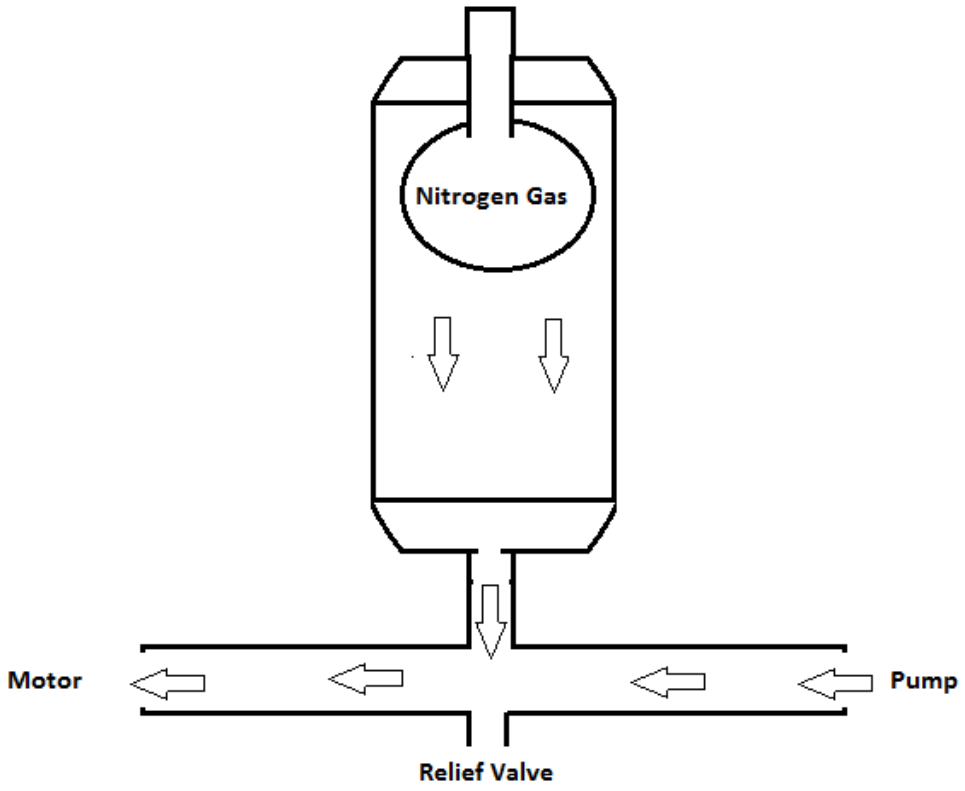

Figure 4: Releasing Accumulator: Increasing Motor Demand Concept

This effectively increases the power output of the motor and allows for short bursts of approximately twenty five horse power, an incredible increase when compared to the original ten horse power engine.

Motor

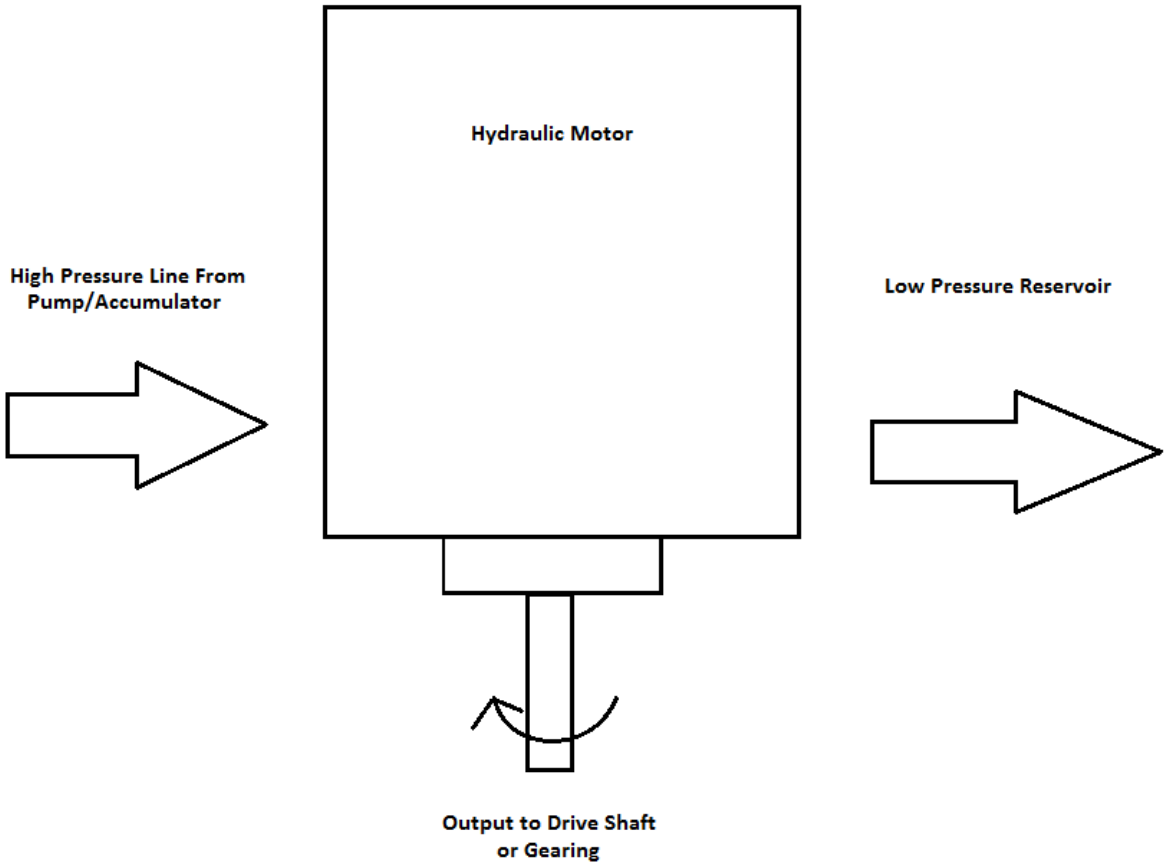

Figure 5: Hydraulic Motor Concept

A hydraulic pump and motor are in fact the same mechanism except a pump absorbs torque while a motor generates it. A pump converts mechanical energy of a rotating shaft into a pressure and flow, while a motor turns fluid power into shaft work, as shown in figure 5. To control the speed of the vehicle, the motor also has a variable displacement. Like the pump, the motor can vary the amount of fluid required to produce one rotation of its output shaft. The power in to the motor can be expressed by

$$Pin = \Delta P * Q$$

Equation 4: Motor Power In

And the resulting power output is

$$Pout = T * \omega$$

Equation 5: Motor Power Out

The motor's displacement determines how much oil will pass through the motor for each revolution. The speed of these revolutions (without considering load) is determined then by the pressure drop across the motor. In practice the shaft speed is determined by the speed of the vehicle, which is a function of the applied torque. Increasing the displacement increases the torque, which will increase the speed of the vehicle.

Conceptual Design

With the development of the Hydraulic Series Hybrid drive train, the design of the drive train layout was simplistic compared to the rest of the system. At first the team had a general idea of how the system worked from the general background research as well as discussions with the teams advising professors. The concept has remained the same from the beginning of the project with the idea of using a hydraulic motor and pump coupled with an accumulator. The accumulator was essential as this is what allowed the drive train to store energy. The figure below illustrates an early sketched schematic to detail the necessary items for the system.

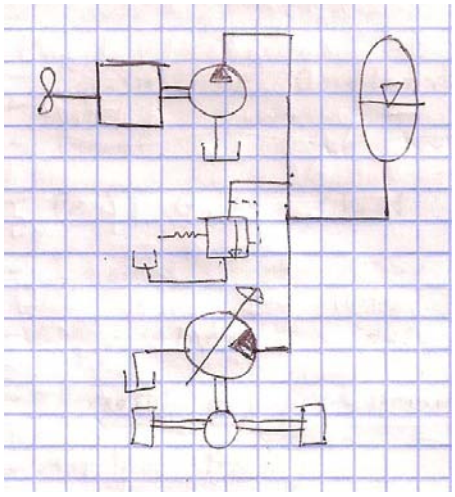

Figure 6: Flow Schematic, First Iteration

This figure shows the main components of the hydraulic system being the pump, motor, and accumulator. At this stage in design and development the type of motor and pump (i.e. fixed displacement vs. variable displacement) were still being discussed. In this schematic, a fixed pump (at the top) is being used with a variable motor (at the bottom). A relief valve is included in the schematic as the team knew from the start that the system would be operating in pressure ranges of three to five thousand pounds per square inch. The schematic has yet to include any considerations for junctions or hoses and fittings.

The next schematic begins to consider the junctions necessary to connect each hydraulic component. The hoses also began to become a key focus as the team was starting to formulate calculations for hose diameters and lengths. The team has also determined at this point that both hydraulic pump and motor will be variable displacement as illustrated in the diagram.

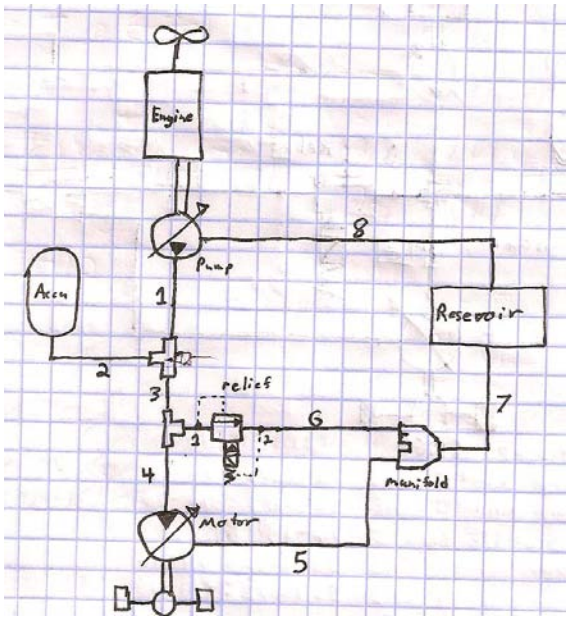

Figure 7: Flow Schematic, 2nd Iteration

The schematic shows two tee unions between the pump and motor to allow for connections to the accumulator and relief valve. A manifold is also existent in the system to divert oil through one junction back to the reservoir. As the design progressed and the pump and motor were acquired, the team learned that the motor and pump have a third hose each that must be connected to the reservoir. These hoses are the case drains of each component to allow for leakage within the unit.

The next schematic incorporates the case drains for the hydraulic components and combines the tee branches. One union cross and one tee branch are both coupled directly to the

hydraulic pump in series in order to reduce the amount of hoses. This also allows the incorporation of a pressure transducer to be connected to the tee branch.

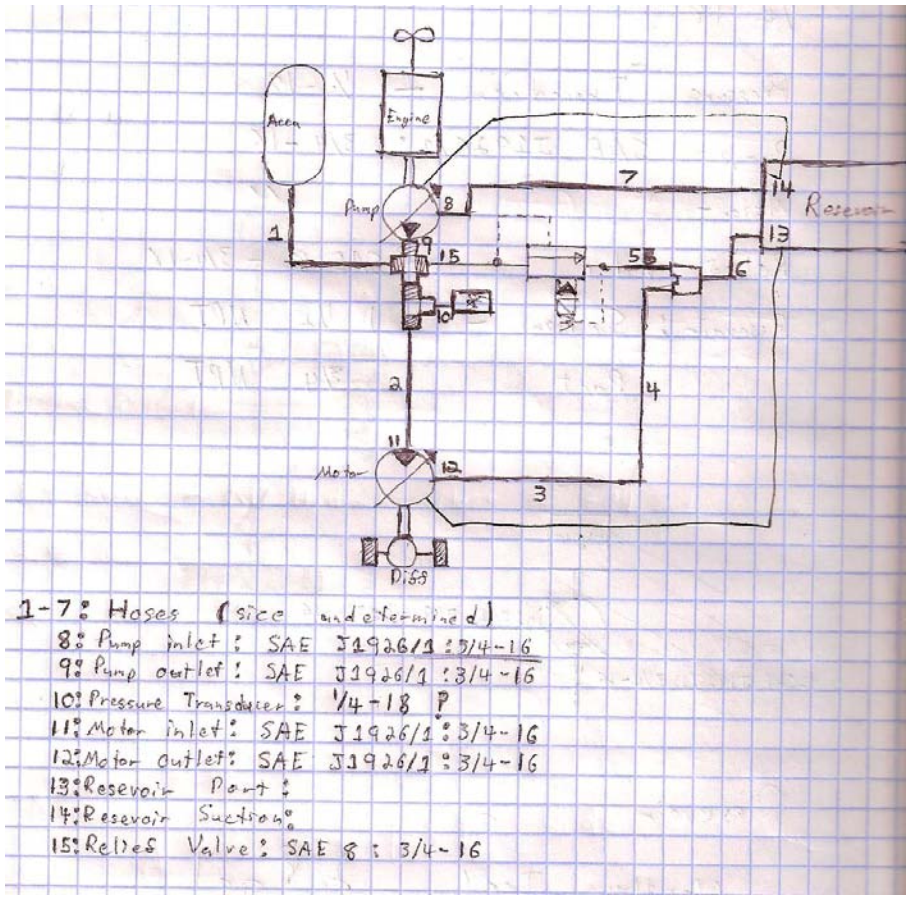

Figure 8: Flow Schematic, 3rd Iteration

The case drains are also incorporated into the schematic to account for the extra hoses and to display the fashion in which they are to be connected. With advisement from the teams advising professors, it was suggested that the case drains be connected directly to the reservoir. This reduces the bulk of the manifold as well as any back pressure from the motor out if the case drains were connected to the manifold. Finally, this schematic also begins to examine the necessary port sizes at each component to allow for further sizing of hoses as well as considerations for connectors.

The next schematic begins the utilization of Microsoft Visio to clearly label the hydraulic schematic. The key feature of this schematic is that the manifold block has been moved to incorporate the tee branch and union cross between the pump and motor. This simplifies the system further allowing fewer junctions and hoses within the system. A filter has been added to the input of the reservoir to ensure that it is considered when determining the connectors and to ensure that the oil is clean upon leaving the system.

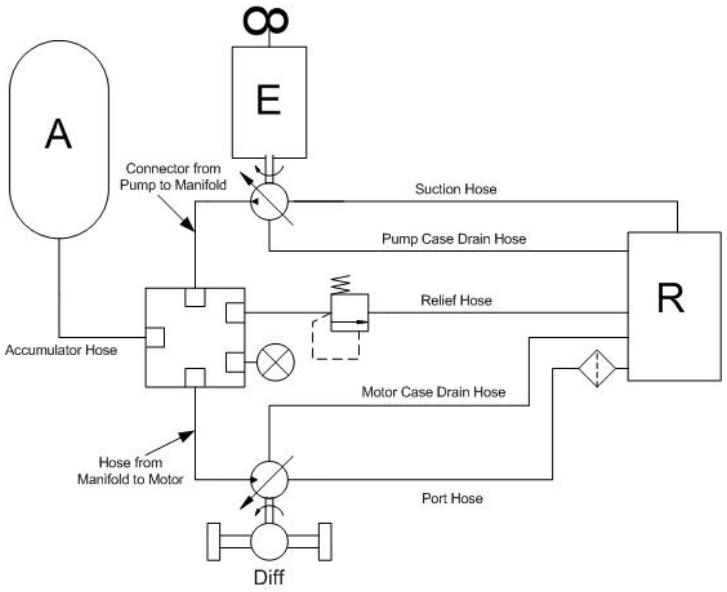

Figure 9: Flow Schematic, 4th Iteration

The last schematic displays the final design considerations of the system with the manifold hooked directly to the accumulator to provide support for the manifold as well as remove one more hose from the system. The major design consideration here is the added hose that connects the input and output of the reservoir via two tee unions at each location respectively. This hose which is also connected to a check valve at the input to the reservoir allows the system to produce regenerative breaking. With this schematic, the connectors and fitting types for each hose have also been laid out and specified to allow a complete bill of materials to be generated for book keeping as well as ordering.

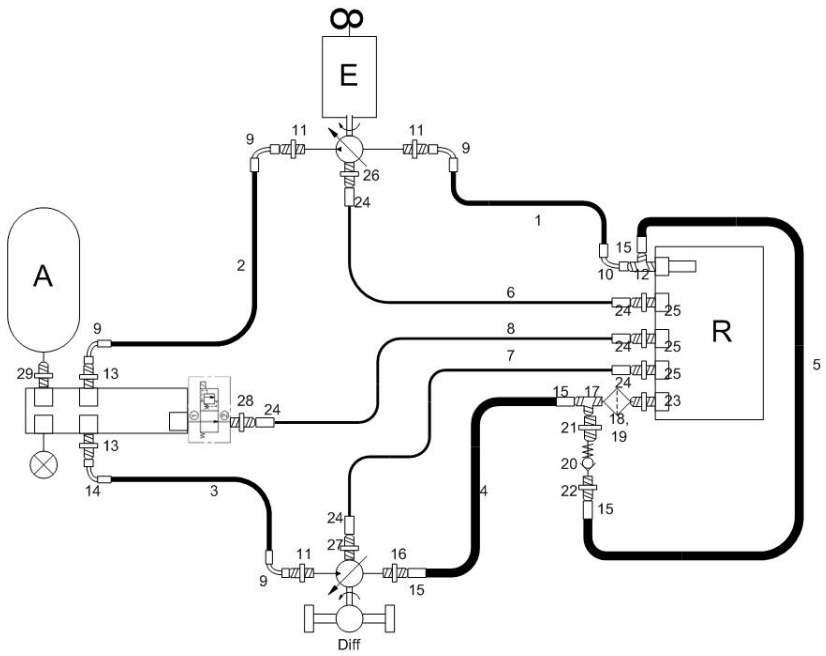

Figure 10: Final Schematic

Simulation and Part Selection

Simulation

In order to properly model the system in real time and determine the theoretical performance of the system, the driving equations for the pump, motor, and accumulator were modeled in Simulink, an extension of the MATLAB software. Once this system was modeled and limits were put in place, line losses and drag on the car were modeled as well. This model was then used to simulate not only various conditions that the car would experience during its operation, but also how the control system would act in order to achieve the required behavior.

The first item modeled was the pump, which takes the torque and rotation of the engine and converts it to pressure and flow. The system block for the pump can be seen in Figure 11 below:

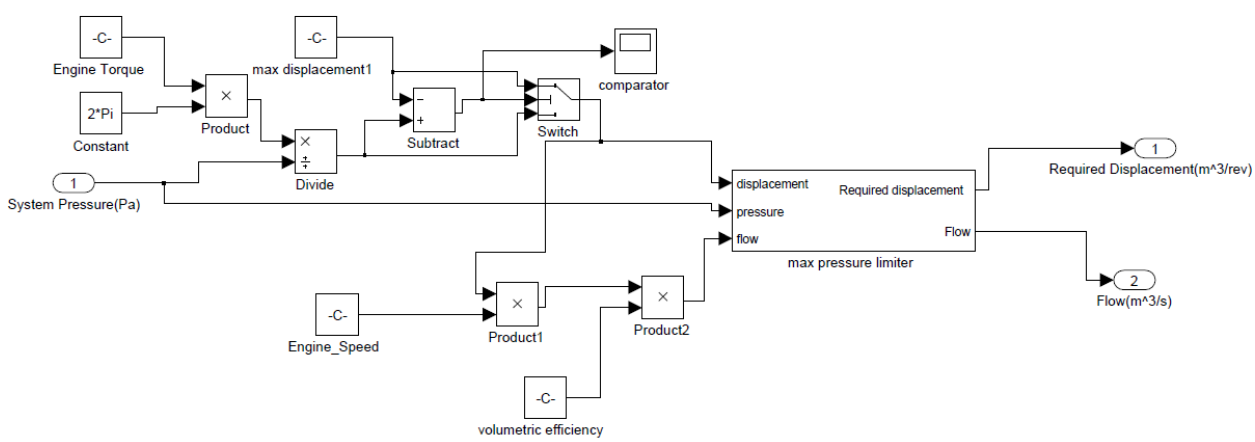

Figure 11: Pump Module

The operation of this system requires that the engine operate at its peak power rpm of 3250 at all times. In order to achieve this as the pressure of the system increases the pump must lower its displacement so that the load on the engine remains constant. This module calculates

the required displacement, given the system pressure, in order to keep the engine at its peak power. It then outputs to the rest of the system the flow generated given that displacement. This algorithm is specifically mimicking how the control system will vary the displacement of the pump in the vehicle. The Displacement vs. Pressure curve generated by this simulation is shown in Figure 12 below.

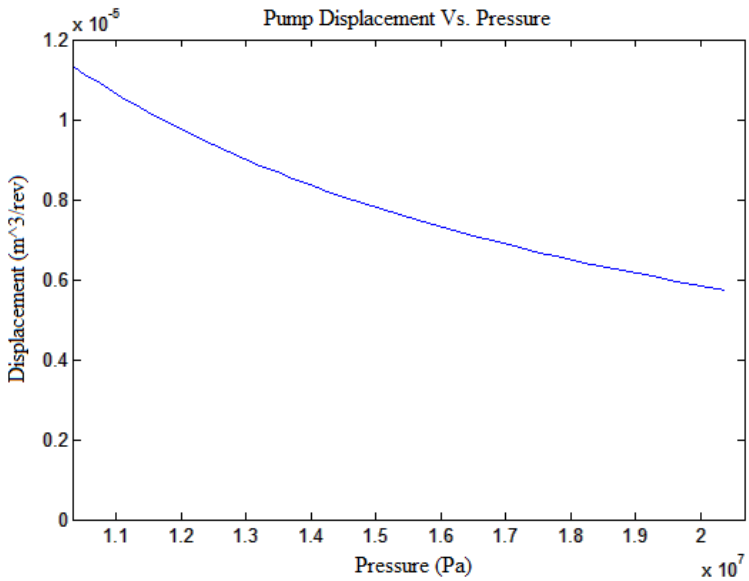

Figure 12: Pump vs. Displacement Curve

Volumetric efficiency has also been factored into the flow calculation. The max pressure limiter block forces the pump displacement to 0 when the system reaches max pressure, again mimicking how the control system will need to behave.

The second module is the motor which takes the flow and pressure generated by the pump and based on its displacement and speed converts that hydraulic power to torque. It is shown in Figure 13 below:

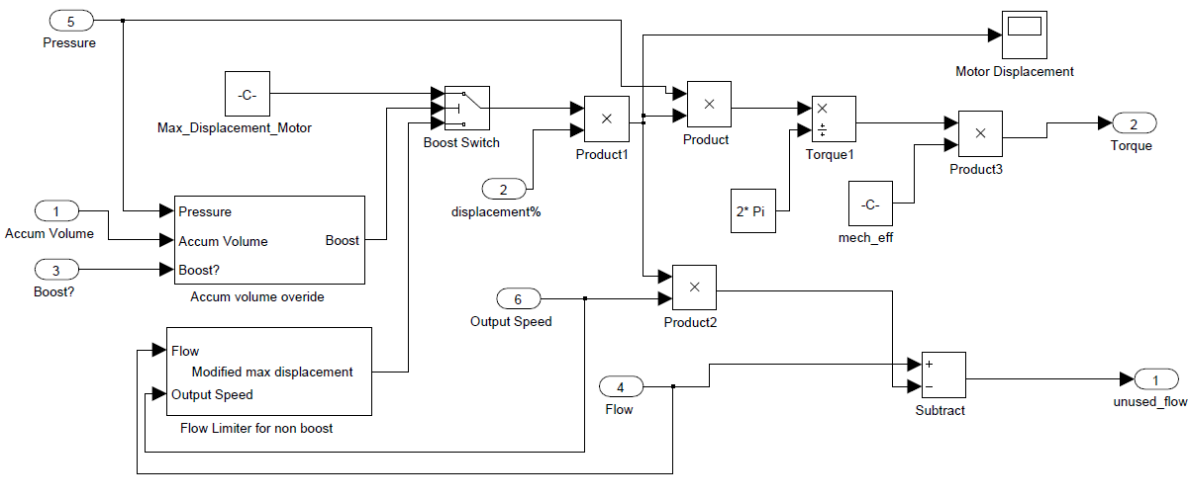

Figure 13: Motor Module

The "Flow limiter for non-boost" block simulates lowering the displacement of the motor at higher speeds in order to only accept the flow that the pump is generating. This is necessary in order to ensure that the accumulator is being filled and not accidentally run dry by the driver. The motor can also be told to ignore this command and increase its displacement to use more flow than the pump is generating. This provides a "boost" of torque as the motor starts pulling fluid out of the accumulator. The reduction in displacement vs. speed is seen in Figure 14 below:

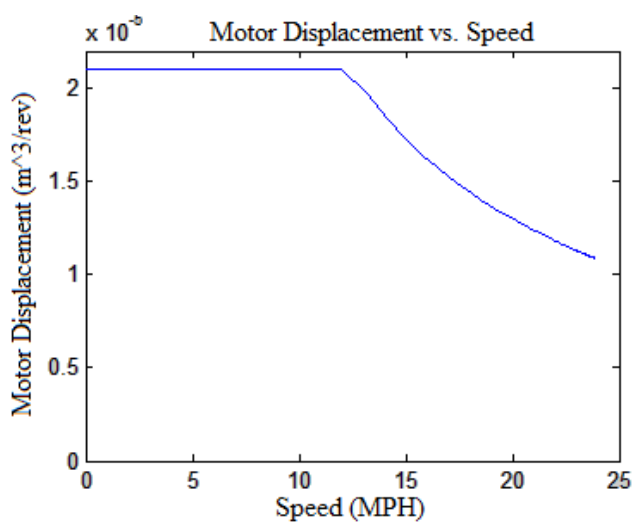

Figure 14: Motor Displacement vs. Speed Curve

The Accumulator block simply takes the unused flow from the motor and integrates it to determine the fluid stored in the accumulator. It then uses the pre-charge and the total volume of the accumulator to calculate the system pressure. This block can be seen in Figure 15 below.

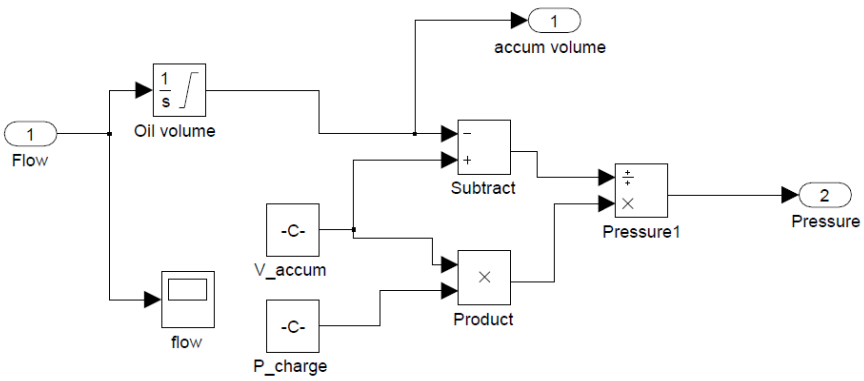

Figure 15: Accumulator Module

The final block is the drag and speed calculation block which is pictured below. This block takes the torque generated by the hydraulic pump, runs it through the gear ratio, accounts for drag and the weight of the vehicle to find the acceleration of the vehicle, then integrates that to find the speed of the car. That speed is then run back through the gear ratio and fed into the motor module as the speed of the motor shaft.

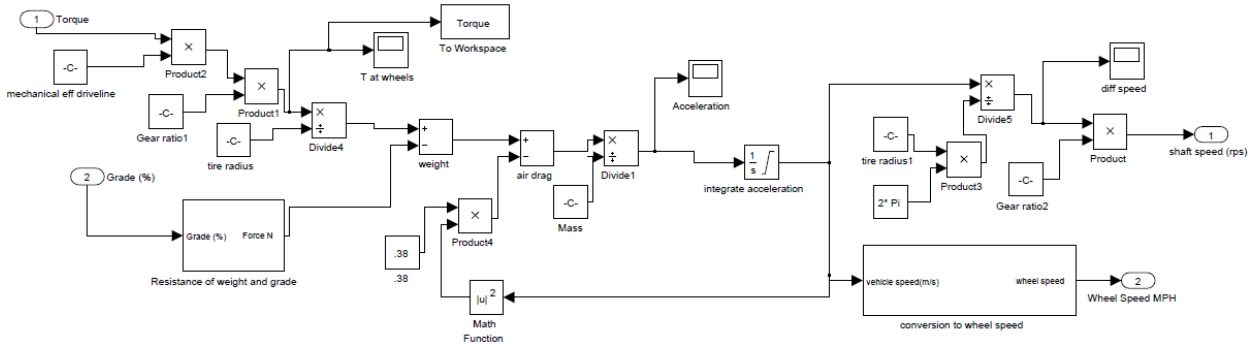

Figure 16: Output Speed Module

The entire system is modeled together as shown in Figure 17. There is a separate block that incorporates the pressure drops through different components and feeds that into the motor block. There is also a drive cycle block that was used simulate the system accelerating and decelerating over the course of a race.

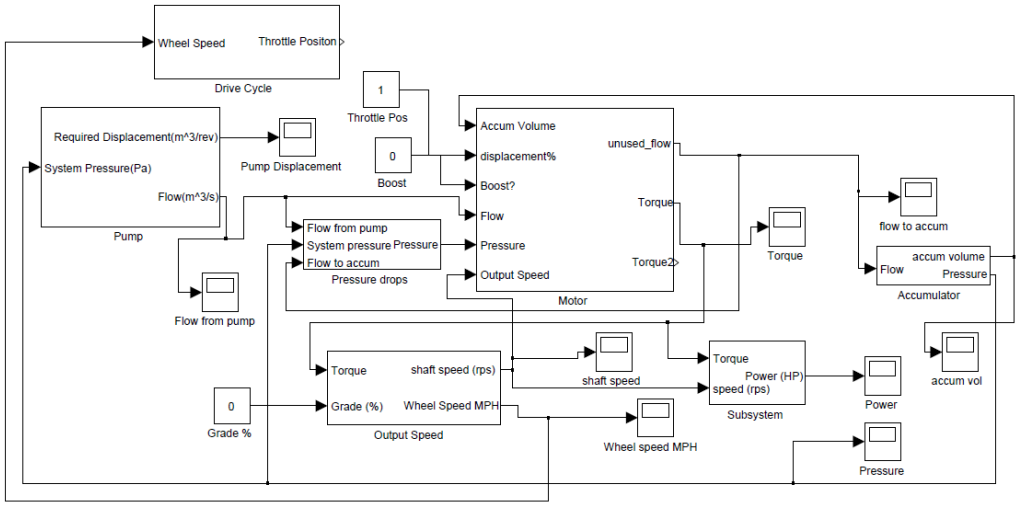

Figure 17: Simulink System

This simulation was run under many different combinations of starting conditions and loads in order to understand how the system as a whole would behave in the real world. Some important parameters garnered from this simulation are the peak power figures starting from a stop with no pressure in the system and with max pressure in the system. These curves are shown in the figures below.

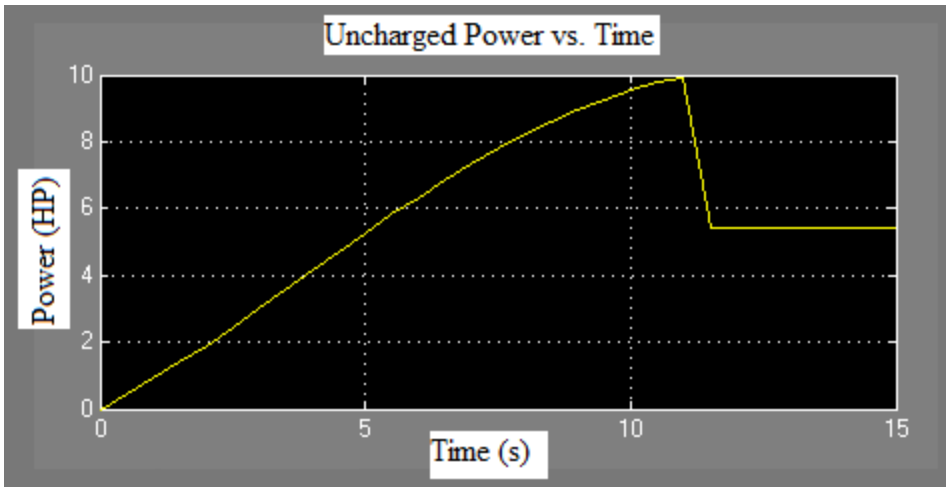

Figure 18: Uncharged Power vs. Time Curve

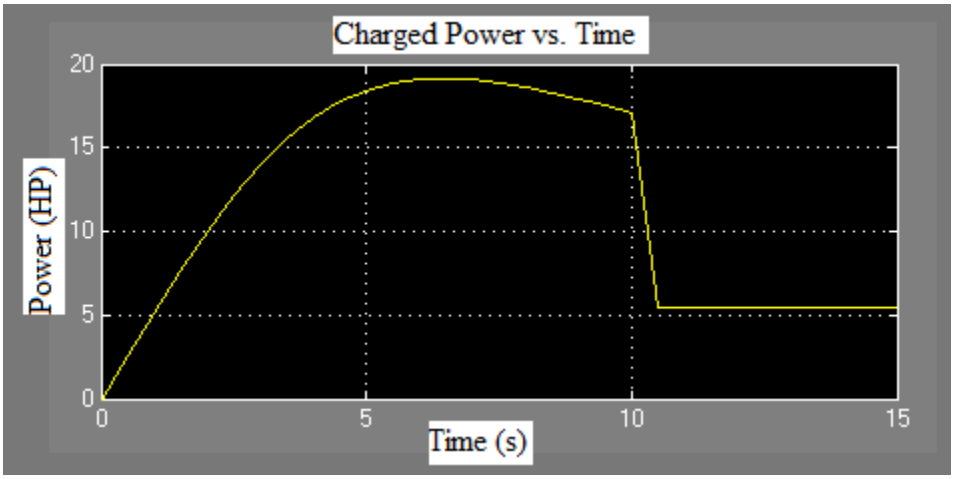

Figure 19: Charged Power vs. Time Curve

The peak power from an uncharged system is 10 HP, while the continual power from the pump is roughly 5.5 Hp. This peak is caused by the motor not using all the flow from the pump at low speed and the excess flow moving into the accumulator and causing the accumulator to charge. This stored energy then provides a brief boost to the system as the car speeds up, causing the peak. In the charged system there is a peak power of 20 HP. With full displacement of the motor the accumulator is depleted in 10 seconds, and the power returns to the pump supplied

baseline. It was also found that the pump operating in the prescribed method should fill the accumulator in 18 seconds if the car is not moving.

Another feature that was tested in the simulation was regenerative breaking. Starting at 20 MPH the motor was given full negative displacement and came to a stop in 3.5 seconds. During this time 32,640 J were stored in the accumulator, 10,450 J of which came from regenerative breaking, the rest from the pump. To put that in context, the energy recovered from regenerative breaking from 20 MPH accounts for 8% of the energy capacity of the accumulator.

Part Selection

In most hydraulic applications, size is an important factor to consider, but the desired output is of much greater importance. A backhoe or excavator that uses hydraulics to dig or apply force is designed to maximize the output of its components, with little care as to their size. For the Baja car, the size of the components is equally as important as its output. The rear of the car is limited in space, and to ensure all components function properly, the system must fit within the confines of the frame.

Pump

The pump for this design is the source of input hydraulic energy into the system. The pump needs to have adequate flow rate and the ability to sufficiently pressurize the system. Its size, or displacement, is dictated by the minimum system pressure and power of the engine driving it. In order to do this we used a Hydro Gear PK series variable displacement, bidirectional pump with the following specifications (Table 1).

Product Type		PK
Displacement	in³/rev [cc/rev]	0.73 [12]
Input Speed		
Maximum Unloaded	rpm	3600
Minimum Loaded	rpm	1800
System Operating Pressure		
Continuous	psi [bar]	1000 [70]
Intermittent	psi [bar]	2100 [145]
Peak	psi [bar]	3500 [240]
Pump Performance		
@ 2400 rpm/1000 psi	gpm [l/min]	7.1 [26.8]
@ 3000 rpm/1000 psi	gpm [l/min]	8.9 [33.6]
@ 3600 rpm/1000 psi	gpm [l/min]	10.8 [40.8]
Case Pressure		
Maximum @ Cold Start	psi [bar]	10 [0.7]
Continuous - Max.	psi [bar]	4 [0.3]
Inlet Vacuum		
Maximum Continuous Inches Mercury		4
Charge Pump Displacement(s)	in³/rev [cc/rev]	0.19 [3.2]
Auxiliary Pump Displacement	in³/rev [cc/rev]	0.19 [3.2]
Auxiliary Pump Relief Setting	psi [bar]	650 [45]
Auxiliary Pump Performance @3200 rpm, 500 psi, 70 SUS [13 Cst] oil, & 180°F	gpm [l/min]	1.8 - 2.0 [6.8 - 7.6]
Control Torque Required to Stroke Pump [Approximate - 20° External Stroke Angle]	lb-in / 1000 psi [N-m / 70 bar]	85 [9.6]
	lb-in / 500 psi [N-m / 35 bar]	60 [6.8]
Pump Oil Temperature		
Maximum Intermittent (hottest point)	°F [°C]	230 [110]
Normal Operating Range	°F [°C]	-10 to 200 [-23 to 93]
Fluid Viscosity Limits @ 230°F [110°C]		
Optimum	SUS [cSt]	70 [13]
Minimum	SUS [cSt]	55 [9]
Weight of Unit	lbs [kg]	8 [3.6]

Table 1: Pump Specifications

This pump is desirable for this application due to its relatively light weight of 8 pounds, its small size, and its small displacement. This pump was designed with lawnmower engines in mind and is ideally suited to this application. The Hydro Gear PJ series pump has a displacement of 0.72in^3/rev and its performance is closely related to our engine. It moves 8.9gpm at 3000rpm/1000psi and 10.8gpm at 3600rpm/1000psi. Between this RPM range is exactly where the engine will be spinning giving close to optimum power. The SAE Baja team from 2008-2009 tested the 10 hp engine to have peak power at 3250rpm. The pump also has a peak pressure of 3500psi so it will be able to pressurize the system to the designated max level of 3000psi. While this is pushing its limits slightly, it will not run at its actual 3500psi peak. The pump is mounted directly to the Briggs and Stratton engine using a love joy coupler to link their shafts together and an aluminum housing to mount the two in line.

Motor

Hydro Gear was once again useful for motor selection. The original search for the motor was hindered due to our specific needs for variable displacement at a low maximum displacement. There were however a few pumps that met the specifications of the car's needs. A pump can be converted to act as a motor because it is little more than changing orientation and flow. The motor was selected by design to double the output torque of the Briggs and Stratton engine at 1500 psi, the lowest pressure of the system. The driving equation being

$$\text{Torque} = \text{Pressure} * \text{Displacement}/\ 2\pi$$

Equation 6: Torque at Motor

The engine produces around 15 ft-lbf of torque so a hydraulic motor would need a displacement of 1.381in^3/rev in order to produce the desired 30 ft-lbf. In addition, we wanted a motor which could go to negative displacements in order to take advantage of regenerative breaking and provide reverse drive.

The Hydro Gear PW pump meets the requirements and will act as an effective motor. The motor must be able to handle a higher flow rate and pressure than the pump since it will be not only be taking the load of the pump and translating it into angular velocity, but it will also need to handle the surge of flow and pressure from the accumulator when it is released into the system. The PW series has a displacement of 1.33in^3/rev and it can handle 19.6gpm at 3600rpm/1000psi which is twice as much as the pump can produce. All of its technical specifications are shown in Table 2.

Product Type		PK
Displacement	in³/rev [cc/rev]	1.33 [21.8]
Input Speed Maximum Unloaded Minimum Loaded	 rpm rpm	 3600 1800
System Operating Pressure Continuous Intermittent Peak	 psi [bar] psi [bar] psi [bar]	 1250 [86] 2500 [172] 3750 [260]
Pump Performance @ 2400 rpm/1000 psi @ 3000 rpm/1000 psi @ 3600 rpm/1000 psi	 gpm [l/min] gpm [l/min] gpm [l/min]	 13.1 [49.6] 16.4 [62.1] 19.6 [74.2]
Case Pressure Maximum @ Cold Start Continuous - Max.	 psi [bar] psi [bar]	 25 [1.7] 10 [0.7]
Inlet Vacuum Maximum Continuous Inches Mercury		4
Charge Pump Displacement(s)	in³/rev [cc/rev]	0.13/0.19 [2.1/3.2]

Auxiliary Pump Displacement	in³/rev [cc/rev]	0.19 [3.2]
Auxiliary Pump Relief Setting	psi [bar]	650 [45]
Auxiliary Pump Performance @3200 rpm, 500 psi, 70 SUS [13 Cst] oil, & 180°F	gpm [l/min]	1.8 - 2.0 [6.8 - 7.6]
Control Torque Required to Stroke Pump [Approximate - 20° External Stroke Angle]	lb-in / 1000 psi [N-m / 70 bar] lb-in / 500 psi [N-m / 35 bar]	105 [11.9] 85 [9.6]
Pump Oil Temperature Maximum Intermittent (hottest point) Normal Operating Range	 °F [°C] °F [°C]	 230 [110] -10 to 200 [-23 to 93]
Fluid Viscosity Limits @ 230°F [110°C] Optimum Minimum	 SUS [cSt] SUS [cSt]	 70 [13] 55 [9]
Weight of Unit	lbs [kg]	14 [6.3]

Table 2: Motor Specifications

Accumulator

The chosen accumulator is not the part the group originally had in mind. The system required an accumulator volume between 1-2 gallons and a pressure tolerance of about 3000-5000psi. With these specifications it could provide not only large amounts of torque while dumping pressure and flow into the motor, but due to its volume release the fluid over an adequate time. If the capacity was less than 1 gallon, there would only be a short period of torque, as the pressure would release and the fluid volume would be expended quickly. Larger accumulators can store more energy, but they also weigh considerably more. A 1 gallon bladder

accumulator weighs approximately 32lbs while a 2.5 gallon type weighs 77lbs. Due to a generous donation by Parker Hydraulics, the project acquired a 3.5 gallon bladder type accumulator. It is rated up to 3200psi and constructed out of carbon fiber. This is advantageous because the accumulator only weighs approximately thirty pounds, versus a more traditional model that would weigh well over a hundred pounds. This tough exterior will also not only stand up to the pressure inside the vessel, but also be resilient to any unexpected forces while driving the car. It will, due to the regulations of SAE, have shielding from the cockpit.

The accumulator was sized through a series of Matlab simulations of acceleration runs over an approximated at 200 ft long straightaway, in combination with weight considerations as well as commercial availability consideration. There were a few requirements in mind when sizing this accumulator. The first was to find an accumulator that would not run out of charge before the end of the approximated straightaway at full throttle. The second requirement was to ensure that the accumulator small enough to fit within the vehicle, and that it would also be small enough to recharge up to pressure through an estimated turn.

It was determined that a ½ gallon effective volume accumulator (1 gallon total volume) would be able to travel 82 ft coming out of a turn at 10 mph fully charged and at full throttle. This by no means met the set requirement, so evaluation of the next commercially available size (1 gallon effective volume, 2 gallon total volume) was done. It was computed that under the same conditions, a fully charged 2 gallon accumulator could travel 164 ft through a straightaway before it ran out. This result was in the ballpark, but a desired distance was at 200ft or more. It was calculated that the minimum accumulator size would be approximately 2.5 gallons in order to accomplish the desired performance.

Pressure Relief

The system has pressure limitations that cannot be exceeded. The system needs to have a safety feature in which it will release pressure if it is going to exceed the limits of the system. When designing this system we engineered it around the peak pressures of the pump and motor. The accumulator was thought to be able to hold a higher pressure than both of these devices. In reality, the accumulator that was donated for this project is rated to hold 3000psi, and a peak of 3200psi. To relieve pressure, the system uses a solenoid valve with manual relief. The pressure relief on the system is rated to automatically engage at 3500psi. This exceeds the specified limitations of the accumulator used in the system but can be controlled electronically to engage at any pressure using pressure readings from a pressure transducer. The solenoid valve is by default open. The valve sits within a copper coil which creates a magnetic field when a current is passed through it. The magnetic field forces the valve closed. If the system is shut down via the kill switch, the coil no longer receives a current and the relief valve will open, releasing pressure from the system and fluid into the reservoir.

Hose Design

With a hydraulic system, some form of channel to transport oil is necessary between the pump and motor called a conductor. Several types of conductors are metal pipes, tubes, or rubber hoses. For the nature of this MQP rubber hoses were selected due to the flexibility in design and placement and the erratic location of ports in the system. The first step taken in designing the hoses was to determine their size. To do this, MathCAD 14 was used to setup a series of equations to determine the pressure drop in a conductor dependent on fluid flow and hose inside diameter (hose gauge). The ideal hose would have a pressure drop below 5 psi. Setting the fluid flow to the maximum the hose would experience allows them to be sized for the worst case scenario. The only adjustable variable is therefore the gauge of the hose. Using the following chart for Aeroquip hoses, the inside diameter was varied between a -8, -10, -12, and -16 to determine the best size.

Part Number	Inside Diameter	Outside Diameter	Operating Pressure	Burst Pressure	Bend Radius	Weight Per Foot
GH781-4*	0.25"	0.53"	5800	23200	2"	0.22
GH781-6	0.38"	0.69"	5000	20000	2.5"	0.29
GH781-8	0.5"	0.81"	4250	17000	3.5"	0.39
GH781-10	0.63"	0.93"	3625	14500	4"	0.44
GH781-12	0.75"	1.1"	3125	12500	4.75"	0.53
GH781-16	1"	1.42"	2500	10000	6"	0.72
*Approved for 10000 psi max operating pressure for static jack hose applications						
		Table 3: Hose Pressure Drops				
GH781-24	1.5"	2.03"	1800	7200	10"	1.4
GH781-32	2"	2.53"	1300	5200	12.5"	1.9

To calculate the pressure drop in a conductor, the losses were calculated in each connector at the end of a hose segment as well as within the hose itself. The losses in the connectors were calculated using the Orifice Equation

$$Q = c_d * A \sqrt{\frac{2}{\rho} * (P_2 - P_1)}$$

Equation 7: Orifice Equation

This equation was then rearranged to solve for pressure loss (ΔP) based on fluid flow (Q), inside cross sectional area (A), orifice coefficient (c_d), and fluid density ρ.

$$\Delta P = \frac{1}{2} * \rho * \left(\frac{Q}{c_d * A}\right)^2$$

Equation 8: Orifice Equation Rearranged

The pump and motor used for this system specifically call for the use of Mobil 1 15w-50 oil and Mobil lists its density at 0.87 kg per liter. Fluid flow is the max for each hose (dependent on location in the system), the orifice coefficient is a standard of 0.6, and the area is calculated based on the table above. The equation to determine the pressure drop within the hose is taken from Darcy's Equation

$$\Delta P = \frac{64}{N_R} * \left(\frac{L}{D}\right) * \left(\frac{\rho * v^2}{2}\right)$$

Equation 9: Darcy's Equation

N_R is Reynolds number and is used to determine if the flow through the system is laminar. As long as Reynolds number is below 2300 the system is in laminar flow and Darcy's Equation is applicable. The other variables in Darcy's Equation are length of the conductor (L), inside diameter (D), oil density (ρ), and velocity (v). Length was estimated for the MathCAD file to determine an initial hose gauge. Reynolds number in this equation was calculated by the equation:

$$N_R = \frac{v * D}{V}$$

Equation 10: Reynolds Number Calculation

Reynolds number is calculated by using fluid velocity (v), inside diameter (D), and fluid viscosity (V). The final pressure drop of a conductor system was found by adding the solution of Darcy's Equation to twice the result of the Orifice Equation to account for the connector on either end of the hose. The MathCAD files for each hose can be found in Appendix H.

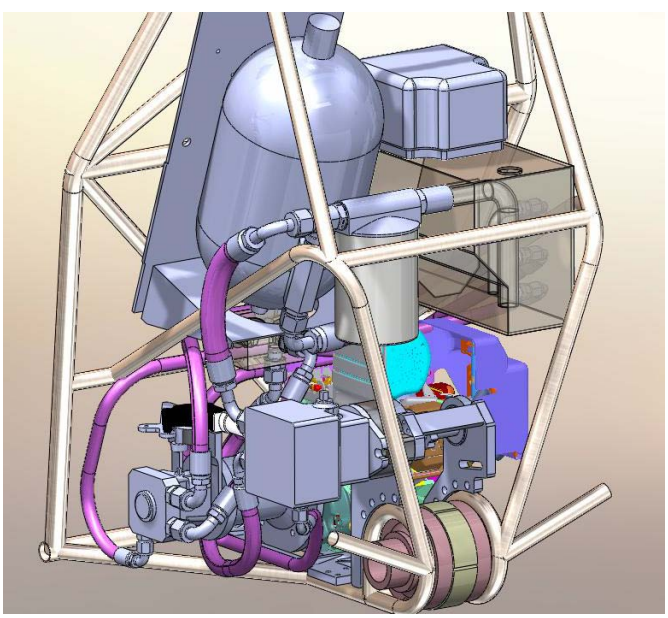

Figure 20: Final System Assembly

The next step in designing hoses was to determine the length of the hose necessary. As the system is expected to run at 3000 psi, the hose fittings must be crimped as opposed to a barb fitting to ensure that they do not burst as pressure increases. The simplest strategy would be to take a wire cord and place either end at

their respective ports in the built system and to measure the straight length of the wire. The best course of action was to model the hoses within Solidworks to predict placement and possible interferences. After acquiring solid models from 3dcontentcentral.com of the connectors and fittings to be used, Solidworks routing was used to simulate rubber hoses between each fitting. At first the auto route option was used as it was capable of forming a spline for the best hose radius and path. However, Solidworks did not account for interferences created by hoses running through several parts. The best solution was to create a 3-d sketch using arcs to create the hose path. This allowed the user to measure the minimum bend radius to ensure the hose will fit. The 3-d sketch also allowed the user to push and pull the spline to create a path that worked best within the space provided. The process was very tedious yet effective and allowed the removal of various steps when iterating the hose lengths as well as eliminating the need to have a hose re-manufactured due to incorrect sizing.

The final important step in designing the hoses was to determine the position of the fittings on the hose. Due to the nature of the system, straight fittings could not be utilized, requiring a 90 degree fitting to be attached to either end of their respective hose. Since the hoses are very stiff and not conducive to twisting, it was necessary to have each fitting crimped at a specific angle from each other to ensure that they would line up with the ports, as

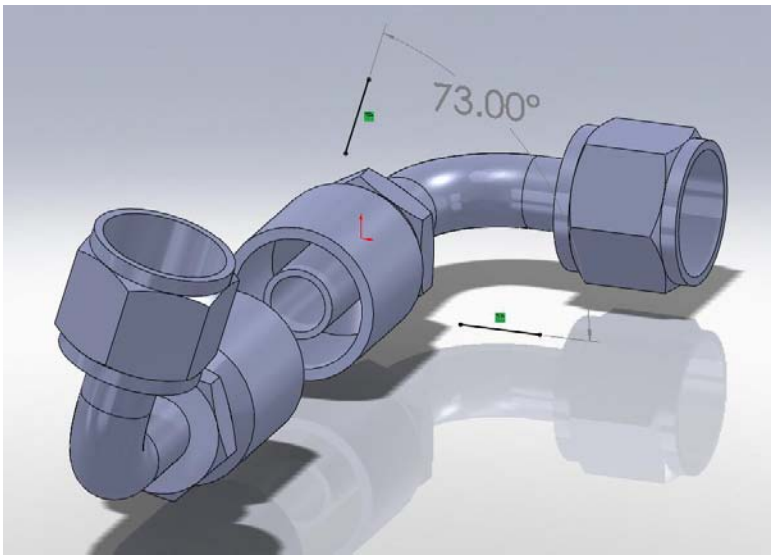

Figure 21: Hose Fitting angles

seen in Figure 21. Solidworks does not have the capability of straightening the hose assembly to allow the ease of measuring the fitting angle from each other, so instead the hose extrusion was modified by create a notch which allowed the user to measure the angle between the notch and a reference point on each fitting. The two angles were either added or subtracted, depending on orientation, to determine the angle between the fittings.

Energy and Power

Thermal Losses

The fluid pressure losses exit the system as heat. As fluid moves throughout the system it creates friction between itself, hoses, connectors, and components. The components themselves also generate heat during operation. Heat generation is an important aspect of this project and needs be minimized due to the nature of the components and the oil.

Overheated fluid is a problem for all hydraulic systems. Hydraulic fluid temperatures above 180 degrees Fahrenheit damage most seal compounds and accelerate the degradation of oil. In addition, both the pump and motor are specifically designed to work with a particular range of fluid viscosity. As the fluid is heated, its viscosity lowers. This causes the efficiency of the pump and motor to drop. Lower fluid viscosity also increases potential leaks in the system.

Fluid Flow Losses

The system experiences losses due to fluid flow. The major losses are due to viscous effects and called pressure loss and friction effects called head loss. The pressure loss is governed by the equation

$$\Delta Pl = \frac{8 * \mu * L * Vavg}{R^2}$$

Equation 11: Pressure Loss in Hoses

In which μ represents the viscosity, L the length, and R is the radius of the hose.

The head loss is expressed through the following equation in which ρ is the density.

$$hL = \frac{\Delta Pl}{\rho g}$$

Equation 12: Head Loss

The system experiences minor losses as well which are created by bends in connectors as well as expansion or contraction within the tubing. Our system has numerous valves and connectors as well as a fluid reservoir, all of which contribute an additional loss. These minor losses are generally expressed as an additional head loss due to a specified component. For example, the additional head loss due to adding a valve to a straight section of hose.

The minor losses are defined

$$hl = Kl * \left(\frac{V^2}{2g}\right)$$

Equation 13: Minor Losses

In which Kl is a loss coefficient inherent to each connector and hl is the head loss added by said connector. Kl is given a loss coefficient based on the design of the connection. If we had connectors that made smooth 90 degree bends we would experience Kl values of about 0.3, and if we used a sharp miter bend Kl would be approximately 1.1. Our design incorporates sweeping bends which bring the Kl value to almost 0. These negligible losses in the redirection of flow allow us to retain as much energy as possible. Important losses in our system are incorporated into the threaded unions where hose connections are made. Kl Values for these connections are in the order of 0.08.To calculate the final loss, one would find the coefficient Kl for each area of specified loss and sum the head losses.

$$Total\ Headloss = hl(major) + hl(minor)$$

Equation 14: Total Head loss

Energy Conversion Losses

A significant source of heat throughout the system is also from the components. Both the hydraulic pump and motor have listed efficiencies of eighty five percent, meaning they are able to convert eighty five percent of the shaft work into fluid power or vice versa. The other fifteen percent is lost through heat.

To utilize peak power of the engine, the pump's displacement needs to be adjusted to load the engine to 3250 rpm and 8.75hp. If the pump is 85 percent efficient

$$Ppump = Pengine * 0.85 = 7.438hp$$

Equation 15: Power at Pump

At the first junction between components the system loses 1.312 hp.

$$Pengine - Ppump = 1.312\ hp$$

Equation 16: Power Lost at Pump

If system is pressurized to 1500psi (accumulator pre-charge pressure), we then know the flow out of the pump. Since power is a function of pressure and flow

$$Q = \frac{Ppump}{pressure} = 8.5\ gal/min$$

Equation 17: Flow from Pump

Displacement of the pump is a function of shaft speed and flow

$$D = \frac{Q}{\omega} = \frac{8.5\,\frac{gal}{\min}}{3250rpm} = 9.9\ cc/rev$$

Equation 18: Displacement of Pump

The motor also runs at 85% efficiency.

$$Pmotor = Ppump * 0.85 = 6.322hp$$

Equation 19: Power at Motor

Power lost at motor is then

$$Ppump - Pmotor = 1.116hp$$

Equation 20: Power Lost at Motor

The heat lost by these components is then

$$Loss = 1.312hp + 1.116hp = 2.428hp = 6178\ btu/hr$$

Equation 21: Heat Lost Due to Pump and Motor

This translate to a total loss due to components of

$$\frac{Loss}{Pengine} = 27.8\%\ power\ lost = 2.428\ hp\ lost$$

Equation 22: Total Power Lost

This is a clear example of the efficiency sacrifice inherent to hydraulic systems. At first glance these losses prove to render our setup to be pointless. Our advantage however is gained by operating at a lower efficiency at all times, regardless of whether or not the vehicle is slowing down, accelerating, or stopped.

Heat Dissipation

Excess heat in the system can be dealt with by various methods. One component in our system which will be helping to regulate temperature is the reservoir. Heated oil flows from the motor into the reservoir and eventually back into the pump. The reservoir transfers heat outward via conduction and convection and can be given by

$$q = U * A * (Tf - Ta)$$

Equation 23: Reservoir Heat Dissipation

in which q is the overall heat transfer (Btu/h), U is the overall heat transfer coefficient (Btu/h*ft^2*°F), A is the surface area (ft^2), T_f is the temperature of the fluid (°F) and T_a is the ambient temperature (°F). The overall heat transfer coefficient is given by

$$U = \frac{1}{\left(\frac{1}{h}\right) + \left(\frac{L}{k}\right)}$$

Equation 24: Overall Heat Transfer Coefficient

in which h is the convective heat transfer coefficient (Btu/h*ft^2*°F), L is the thickness of the reservoir walls (ft) and k is the thermal conductivity of reservoir wall (Btu/h*ft^2*°F). Because the reservoir is in open air environment our h value can be as high as three. Lastly the heat lost by the oil as it passes through the reservoir is given by

$$q = m * C * (Ti - To)$$

Equation 25: Heat lost by Oil in Reservoir

in which q is the heat loss (Btu/h), m is the mass flow of oil (lb_m/h), C is the specific heat of the oil (Btu/lb_m*°F), T_i is the temperature of oil entering the reservoir (°F), and T_o is the temperature of the oil leaving the reservoir (°F). At steady state, the heat lost by the oil equals the heat transferred through the walls of the reservoir.

Keeping those equations in mind, we can solve for the heat dissipated through the reservoir. Our convective heat transfer coefficient is taken to be 3 because it is an open moving air environment, and our thermal conductivity of steel is approximately 27. The thickness of the reservoir walls is 1/8th of an inch. Therefore the overall heat transfer coefficient

$$U = \frac{1}{\left(\frac{1}{h}\right) + \left(\frac{L}{K}\right)} = 2.997$$

Equation 26: Heat Transfer Coefficient Example

Heat dissipation is controlled through temperature differential. To gain an idea of the magnitude of heat dissipation from the reservoir, it is good to test the heat dissipation near the overheating point. Since at 180 degrees Fahrenheit virtually all hydraulic systems become damaged, assume 150 degrees for this example. The reservoir designed for this project has a surface area of roughly 4.75 ft^2 and if the ambient air temperature is 75 degrees Fahrenheit

$$q = 2.997 * 4.75\,(150 - 75) = 1062\frac{Btu}{hr}$$

Equation 27: Heat Dissipated by Reservoir Example

In the previous section, it was calculated that efficiency losses from the pump and motor equated to 6178 btu/hr. Clearly the heat dissipation from the reservoir will not be sufficient to

cool this system. For the system to run for an extended period of time it would need additional cooling. This can be achieved through increasing the size of the reservoir, or adding a heat exchanger to the system. A heat exchanger dissipates heat in the same method as the reservoir but simply allows for a higher heat transfer rate.

Mounting and Design

Engine Mounting Plate

An Engine mounting plate was designed in order to mount the engine as low and precisely in the car as possible. The positioning of the engine was crucial because the packaging of components in this car was very tight. If the engine was out of place, the pump would also be out of place, and the engine might also interfere with sub-frame components. The plate was also designed to capture the base of the engine in order to prevent the mounting bolts from experiencing shear during the car's operation. The final design can be seen in Figure 22 below. This plate mounts directly to the frame and extra pockets were added in order to lighten the plate.

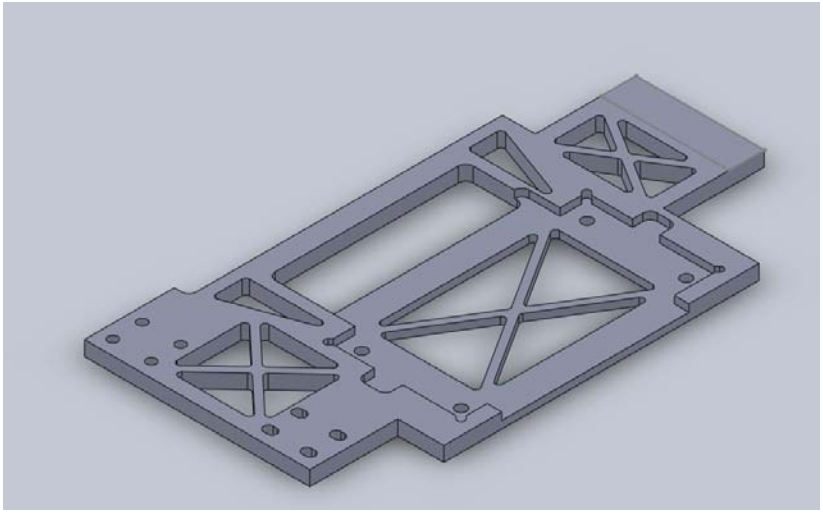

Figure 22: Engine Mounting Plate CAD

Final Drive Train

Gear Reduction

A 3:1 gear ratio planetary and a 19:49 chain sprocket system are used for gear reduction of the final vehicle drive-train. The hydraulic motor has an estimated max speed of 3600rpm and torque of 58Nm. Because of this, a gear reduction is required to slow the shaft and increase the

torque. The original design specification for the reduction was 9:1 to match the system of the previous car. Ultimately, this was not possible and the reduction became ~7.6:1. A planetary gear, and a sprocket and chain provide this reduction.

The planetary gear was selected to handle both the max torque of the hydraulic motor and to provide an initial gear reduction of 3: 1, effectively tripling the torque of the motor and reducing the shaft speed by a factor of 3. Matex gear, located in Cleveland Ohio, had a planetary gear which met these requirements by both being a 3:1 gear ratio and rated to 90Nm. Along with the planetary gear came an input shaft coupler and an output shaft which were able to connect to either side of the planetary gear for power transmission.

The original sprocket and chain setup from the original car was to provide the 2nd and final reduction of 3:1 but this was not possible. The original chain reduction consists of a 3/8ths pitch, 48 tooth double sprocket driven by a 16 tooth sprocket. The driver sprocket can only be bored to an ID of 1.19in while the output shaft of the planetary had an OD of 1.26in. As a result, a 19 tooth sprocket, the smallest which can be bored safely to an ID of 32mm, was selecting creating a final gear reduction of 2.526:1. Combined with the planetary gear, the total reduction of the drive-train is 7.57:1

The input shaft coupler, which came with the planetary gear, required modification in order to mount to the output shaft of the hydraulic motor. The coupler itself needed to be bored to the same OD of the output shaft of the motor and a keyway was cut into the bore to allow power transfer. Also, the key for that key way needed to be grinded to the proper shape and size for an appropriate fit. The output shaft required a keyway cut into it in order to transmit power to the drive sprocket.

Additionally, the planetary required bearings on either side in order to support and align the input and output shafts because the planetary was not designed for any axial or bearing loads. To compensate, a “collar” was made to mount to the planetary gear and hold a bearing in place to support the shaft. In the sub-frame member that the planetary gear mounts too, there is also a bearing to support the input shaft. A third bearing was used to support the other end of the input shaft as well.

Sub-frame

The hydraulic motor requires specific placement and alignment with the drive shaft to prevent bending moments. Also the drive shaft must be aligned with the driveshaft of the vehicle to prevent axial loads on the bearings. In order to do this, the drive-train required a new sub-frame to mount the hydraulic motor to the frame in order to drive the wheels. The sub-frame consists of 7 components; 3 plates on either side along with a parallel bar in between seen in Figure 23. The base bracket mounts directly to the frame of the car in order to align the mounting bracket and anchor it. A bearing mount plate connects to the mounting bracket and has the ability to rotate off axis for chain tensioning.

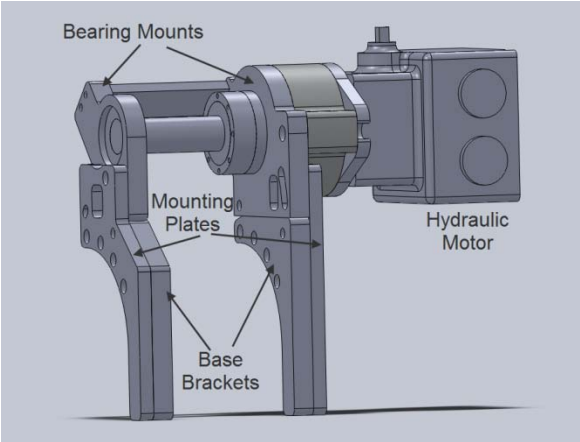

Figure 23: Sub-frame

Chain Tension

Off axis rotation of the bearing mounts provides a method of chain tensioning. This is possible because the hydraulic motor can is powered by fluid flow from somewhat flexible hose, therefore allowing for a movable output shaft. A normal spring actuated tensioner will not suit this application due to the high torque that the chain will see as well as regenerative braking. During regenerative braking, the side of the chain that sees tension changes. Spring tensioners cannot maintain their tension in both tension and compression. If the regenerative braking is activated while the car is moving forward the compressive force on the chain will cause a spring tensioner to release and discontinue tensioning force.

The rotation of the bearing mounting plate is controlled with a set screw, which presses against the base bracket and lifts one side causing the plate to lift and rotate as seen below in Figure 24. Since the rotation is of the axis of the output shaft, it displaces it away from the driveshaft which will tension the chain. Once the chain is tensioned, the load can be transferred to the mounting plate by tightening the bolts down.

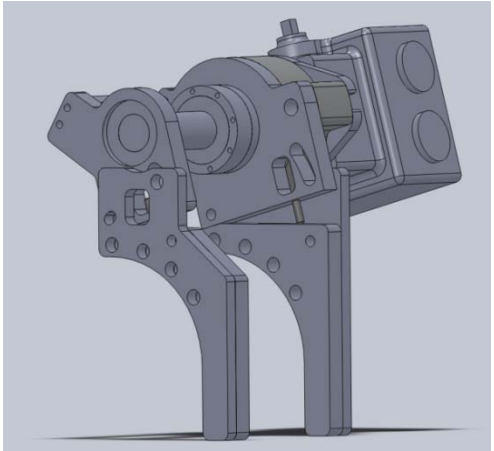

Figure 24: Chain Tensioning

Parallel Plate

A parallel plate is placed between the bearing mounting plates in order to maintain alignment and transfer some of the loads from the motor to the free plate. Connections between these plates and the parallel bar must be carefully adjusted in order to properly align the shafts and bearings. If the bar is too tight or loose, it may cause binding within the bearings and planetary gear.

Assembly

An Added feature of the sub-frame being built in multiple sections is ease of assembly. The mounting plates can be attached to the base bracket before it is placed on the frame. Then the entire bearing mount assembly can be built separately and mounted later. This makes it much easier to bring everything together because the assembly of the most complicated section of the sub-frame is not required to occur within the confines of the frame. A cross section of the bearing mount system is provided below for clarification in Figure 25: Drive-train Cross Section.

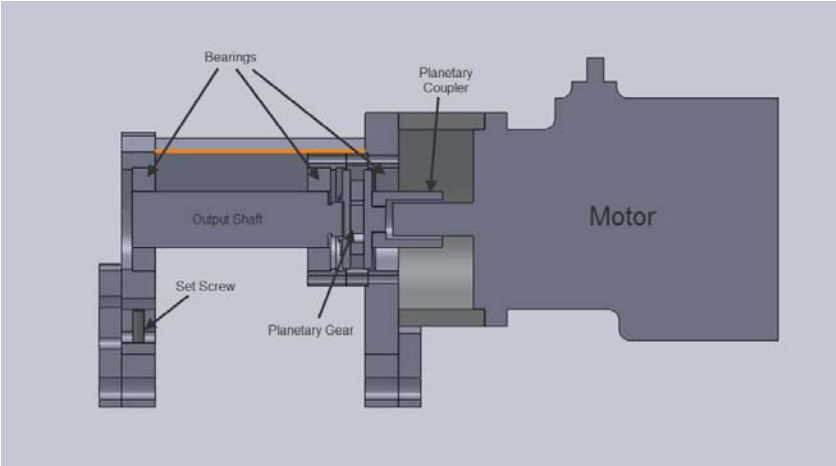

Figure 25: Drive-train Cross Section

Below in Figure 26 is an exploded view of the entire assembly. It shows the components that must be assembled and makes apparent the advantage of bringing assembly outside of the frame.

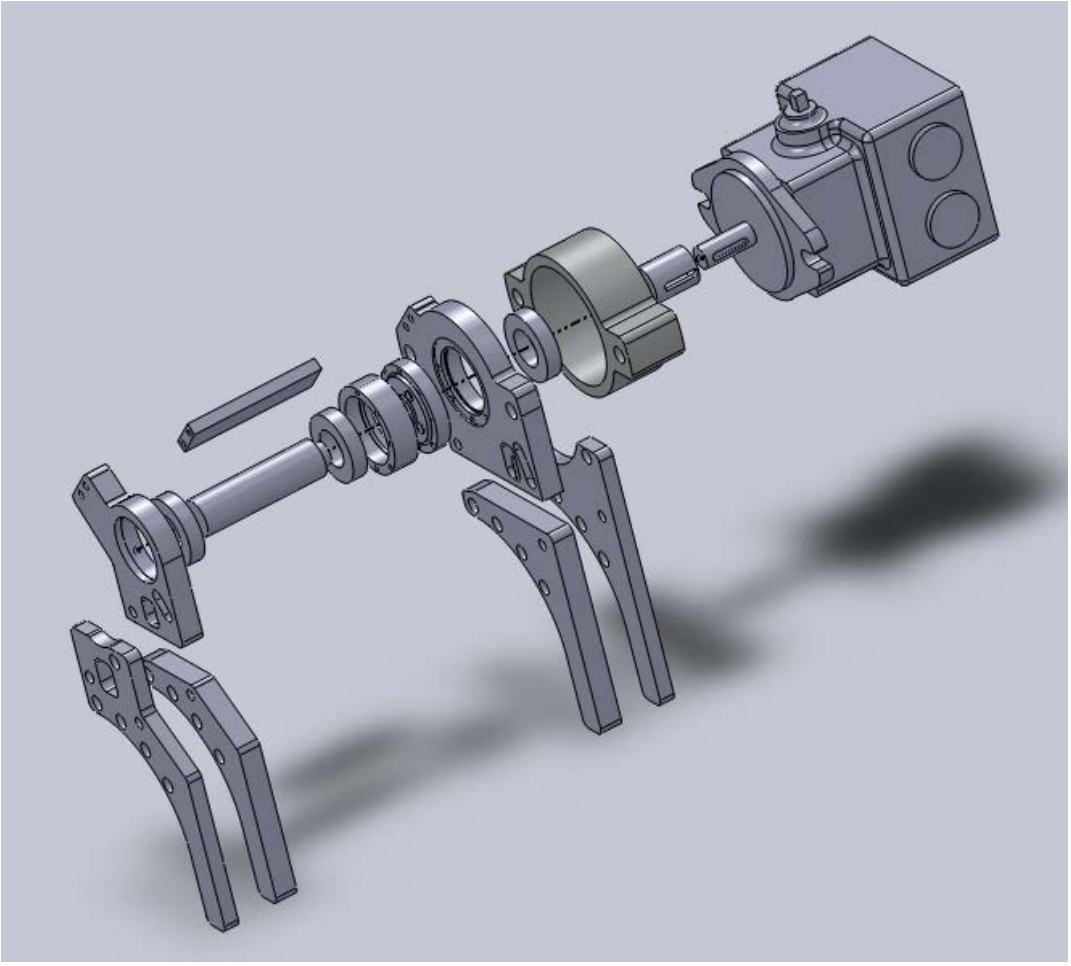

Figure 26: Exploded View of Sub-Frame Assembly

Reservoir Design and Mounting

The reservoir acted as a holding and cooling tank for our hydraulic fluid, which was 15W-50 oil as previously stated. The reservoir was also the location at which the inlet and outlet hoses, pump, motor case drains, and relief outlet connected.

Design of the reservoir was governed by several factors, the first of which was available location and space. Once the placement of the engine was selected, the pump positioning was set due to the constraints of the engine location. The motor placement was also selected as part of the sub frame design, and needed to be in an appropriate transmission location relative to the axle. These and other parts were placed for reasons of convenience, flow requirements, connection constraints and other design reasons. This forced the reservoir to use the remaining space, while still being in a convenient connection location for the aforementioned hoses.

Another requirement of the reservoir was to be as close to 10 Gallons as possible, due to ideal fluid availability and desired cooling potential. To achieve the largest possible volume, the forward face of the reservoir was designed to be parallel with the firewall. This requirement also partially governed its placement, due to the fact that its position provides the greatest available volume in the rear end. The final decided volume was 5 Gallons due to the available space in the back of the vehicle. Since the reservoir receives additional from its placement on a moving vehicle, and the disadvantages associated with additional weight, this volume was deemed suitable. A ten gallon tank filled with oil would have weighed far too much to be considered a practical option and anything less than five gallons would have been too little oil for the system, and would have lead to overheating.

The reservoir was welded out of mild 1/8 in. steel and included five couplers of three different types. These include three (1/2in. ID) SAE dash eight NPTF pipe fittings, one (1 ½ in. ID) NPTF pipe fitting, one (1in ID) dash sixteen NPTF pipe fitting as well as a vented filling cap placed on the top of the tank. The inlet and top case drain include a pipe bend down toward the bottom of the tank, so that the fluid will pour back in at-level. The design includes a central baffle in order to decrease the turbulence of the fluid inside the tank which could be caused by the inlet and outlet ports being close together.

Due to the desired precision of the reservoir within the rear of the vehicle, mounting the tank was a challenge. Several designs for mounting had to be excluded because the tight tolerances of the reservoir with respect to the frame lead to a very intricate installation method. This method created the need for a mount that would allow the reservoir to be rotated and oriented while placing it in the car without colliding with the frame such that it would prevent the reservoir from being able to reach its final location. A final mounting design consisted of two hooks welded to the tank that included removable bolted clamps to secure it. The placement of these hooks on the front and side of the tank allowed for the reservoir to be placed in the vehicle without any maneuvering problems.

Accumulator Mounting

To function properly the accumulator requires a specific orientation. When mounted, the top and bottom ports can be at most twenty five degrees away from vertical. Due to the spatial limitations of the Baja frame, we chose to mount the accumulator along the firewall which was only twenty degrees from vertical (shown below in Figure 27)

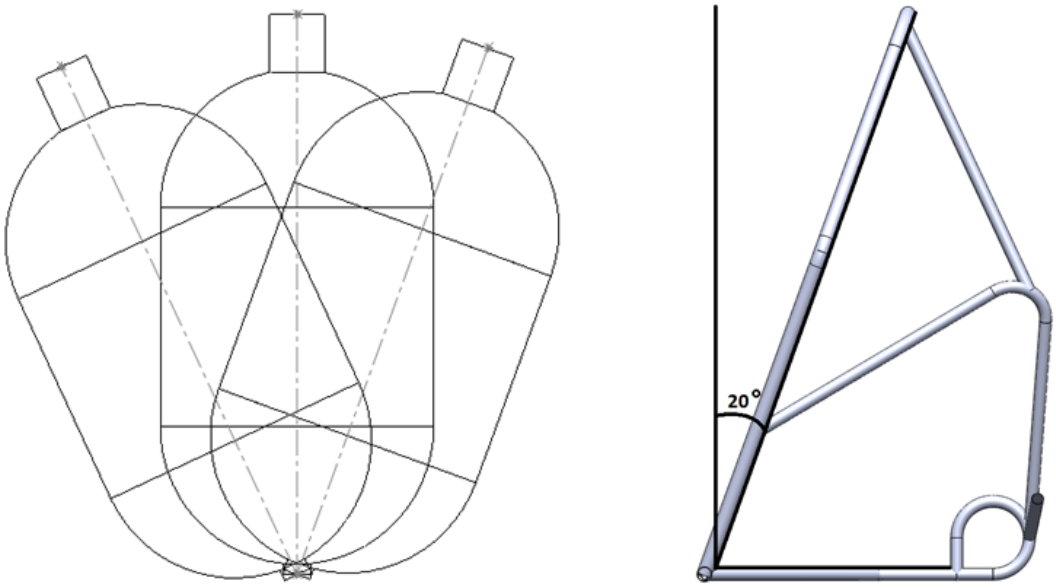

Figure 27: Accumulator Mounting

Two additional parts were purchased to mount the accumulator. The first was a clamp bracket, as shown in Figure 28. As the picture indicates, the bracket can grip around the width of the accumulator, preventing any rotation or lateral movement.

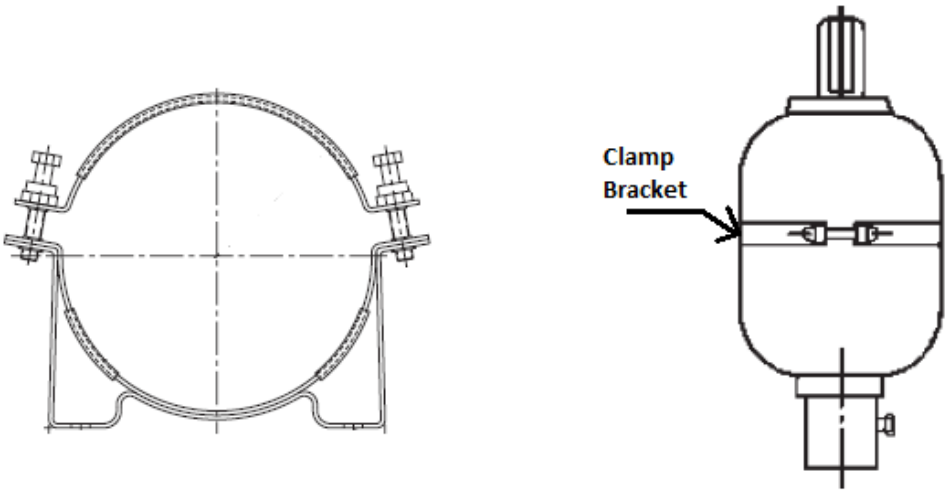

Figure 28: Clamp Bracket

The second purchased piece was a base bracket to support the accumulator. While the clamp bracket would certainly provide some resistance to movement along the accumulator's vertical axis, it is not enough to secure the device in a bumpy off road race. A drawing of the base bracket is shown in Figure 29.

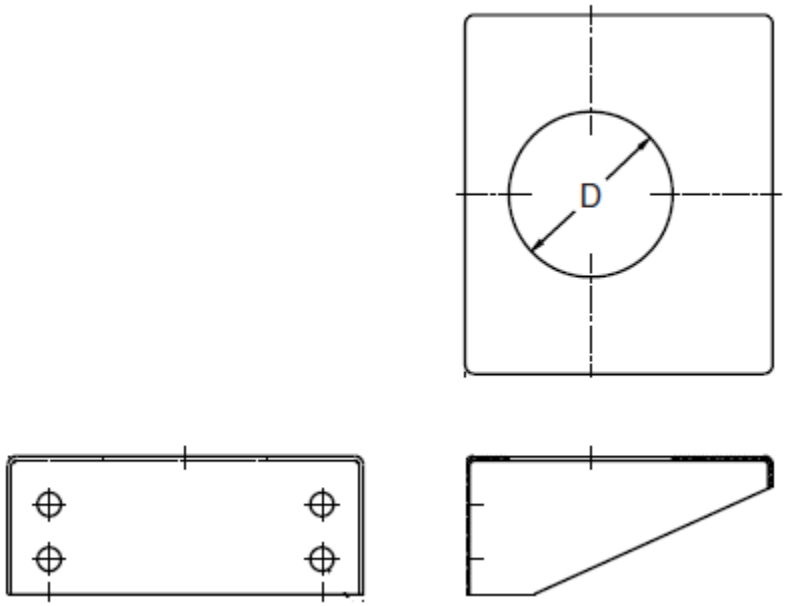

Figure 29: Base Bracket

Both brackets were then mounted on a 1/8th inch thick aluminum sheet and bolted to the frame using pipe C-Clamps. Below is a side view of the final mounted accumulator.

Figure 30: Mounted Accumulator

Control System

Because there are so many components which require control, a driver could not feasibly execute all inputs. An operator would require an electronic control system in order to facilitate the safe and proper operation of the vehicle. This system would regulate the displacement of the pump based on sensor inputs, allow for the driver to monitor the pressure of the system, and regulate the relief valve. This control system consists of a microprocessor, several sensors, an electric window motor, and a 12 Volt battery. A schematic of this system can be seen in Figure 31 below.

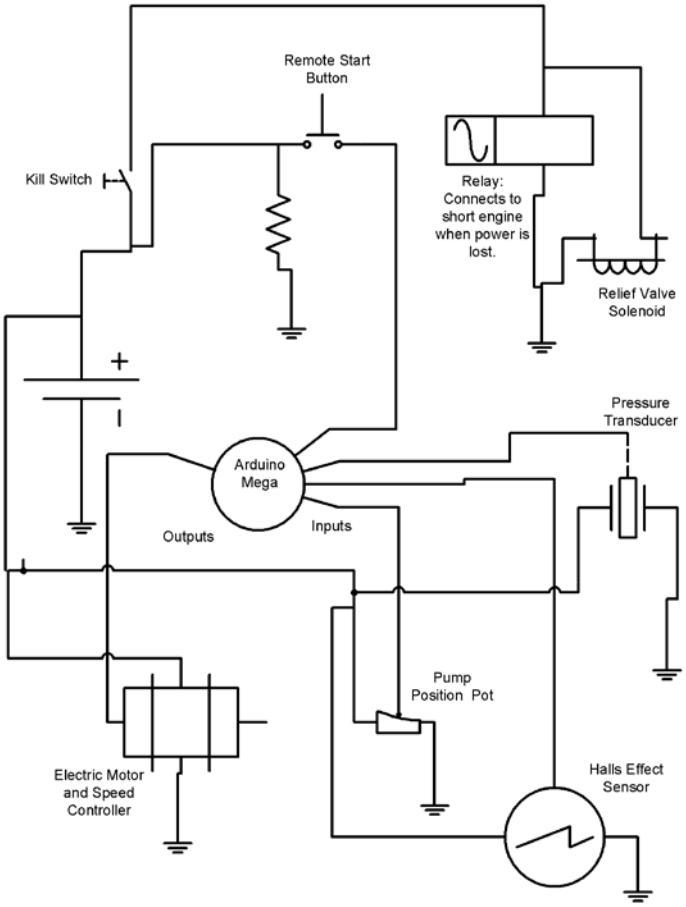

Figure 31: Electronic Control System

The main task of this control system is to regulate the displacement of the pump in order to keep the engine at its optimum rpm of 3250. This is done by using a variety of sensor inputs and an Arduino Mega microcontroller which is used to process the data and generate a command to the control motor. The Arduino Mega was chosen because of its compact size, easy coding language, and heavy online hobbyist support. It uses a hall-effect sensor on the crank of the engine to monitor the engine's rpm, and a pressure transducer in the manifold to monitor system pressure.

In order to begin pressurizing the system, the driver sets the engine to max throttle and the Arduino then increases the displacement of the pump in order to load the engine down to its optimum rpm. When the pressure increases in the system the engine sees a greater load at the same pump displacement which bogs the engine down. The Arduino senses this change in rpm and then lowers the displacement of the pump in order to unload the engine and return it to its optimum rpm. The Adruino also monitors the system pressure, and if the pressure approaches the maximum of 3000 psi, it will force the pump displacement to 0, preventing the system from being pressurized further. The code that runs the Arduino can be seen in Appendix B. The mechanism used for changing the displacement of the pump can be seen in Figure 29 below:

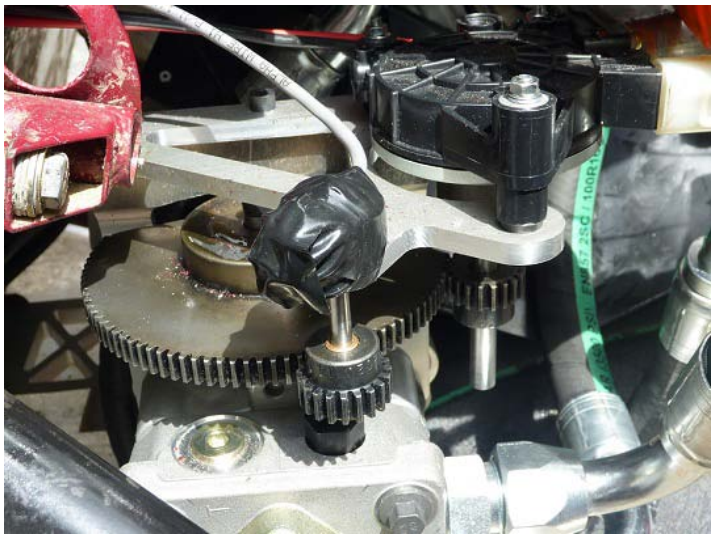

Figure 32: Pump Displacement Control

The control shaft of the pump is geared to an anti-backlash electric motor with a 5:1 gear ratio. It is also geared to a potentiometer which allows the Arduino to monitor the position of the pump.

There are also a number of important user inputs and outputs to the system, and all are controlled on the dash of the car which can be seen in Figure 33 below.

Figure 33: Vehicle Dashboard

The pressure transducer is wired into the voltmeter in the center of the picture which allows the driver to directly monitor the pressure of the system. The kill switch on the far left

(seen here in the off position) kills the engine and opens the relief solenoid, de-pressurizing the system. The kill switch in the bottom center kills only the engine. The button on the right controls the remote start feature of the control system. This feature allows the driver, when there is adequate pressure in the system, to remote start the engine by putting the pump into negative displacement. This would then use the pump to spin the motor, allowing it to start.

Results

Initial Experimentation

After initial assembly of the vehicle, testing of the system began. With the wheels raised in the air and the engine held at idle the system could spin the wheels under its own power. The pressure was very low, around a few hundred psi vs. the designed 1500psi. The team attributed this to the engine being at idle. A simple calculation though would have disproven this theory. At 1400rpm and a pump displacement of 50% or 6cm^3/rev, the system flow should have been ~2.219gpm. With a power as low as 2hp at idle, this would have produced 1700psi in the system with zero displacement at the motor.

This meant that flow was being lost somewhere. Leakage only accounted for a few drops of oil on various connectors and small leaks. This meant that fluid was flowing somewhere else. After further testing, the system would not hold any pressure or spin the wheels under its own power. We then noticed that fluid was flowing through the relief hose by feeling the hose as the system ran. This led to the hypothesis that the solenoid relief valve had failed.

Under the supervision of Professor Van De Ven, the relief valve was plugged meaning the only path through which fluid could flow through the system to the reservoir was the motor. If the system built pressure, it had to be relieved by spinning the motor. To do this “safely”, the motor was to be held at full displacement in order to move as much fluid as possible. During testing though, the motor displacement went to zero when the pedal cable failed. This caused the system pressure to spike. The team decided to cut the system to prevent further pressurization. When the “kill switch” was activated, the pump still was set to a non-zero displacement. With nowhere else to flow, the pressurized fluid flowed through the pump backwards, essential

making it act as a motor, which in turn turned the engine backward. Do to the sudden relief into the reservoir, fluid was sent rapidly out through the fill cap and into the air resulting in a major oil spill. As a result, the team decided not to run the system without relief.

For the next course of action, the team purchased a new solenoid and installed it in place of the original one. No improvements were seen. This led to the theory that the manifold had failed and was allowing fluid to freely flow passed the relief. The machinists confirmed that the wall thickness on the manifold port was thinner than specified. As a result the team decided to bypass the manifold by installing a store bought cartridge valve manifold block which would be installed between the relief hose and the reservoir. After installation the team was able to successfully able to generate and hold pressure in the system.

The next test was to again raise the wheels off the ground and run the system to see if it could spin the rear wheels under its own fluid power. Immediately after the motor was set to full displacement, the wheels spun out of control. This resulted in massive flow to the reservoir as flow = motor speed X Displacement. This, once again, resulted in fluid rapidly escaping the reservoir. The reason for this rapid increase in motor speed is in the equations. Power = Torque X Angular Velocity. If the torque load on the motor is zero, which is the case with free spinning wheels, and there is power present, the angular velocity has to go to infinity.

To circumvent this problem, the team decided to put the wheels on the ground and drive the car against a wall to generate a torque load on the motor. In fact it would be prevented from spinning at all. During the next test, the car moved under its own power 2 feet until it pressed itself against the wall. The pressure then built to approximately 1700psi. The controls where set to set the pump displacement to zero at this point, which occurred, and the system maintained

1700 psi. The engine was shut off and held pressure even still. The relief switch was activated and the system safely depressurized.

This test was seen as the team's first success, unfortunately it began to rain and no further testing occurred at the time. This test was repeated the following day, which gave the team confidence in the system. The next step was to prepare the vehicle for testing on a Dynamometer. This required modification to the exhaust and general maintenance such as extensive cleaning.

Dynamometer Testing

New England Dyno and Tuning was gracious enough to allow testing at their facility. Figure 34 below shows the car vehicle at the garage. Soon after arrival at the facility, the car was set up and ready for testing. The team modified the reservoir by attaching a flange and hose to the fill port to prevent spray leakage and directed the fluid into a bucket for safety. A few runs were completed on the dynamometer with no measurements taken. After a few minutes of running the system at full speed resulted in failure however. The reservoir once again ejected oil which caused the hose to spray oil in the shop. After cleaning up the oil spill, the vehicle was ready to test again. The halls effects sensor though was malfunctioning. To get useful data, the pump displacement was held at 100% of 12cm^3/rev as well as the motor. This time, the dynamometer recorded data. Unfortunately, the car only ran for approximately 30 more seconds and then sprayed oil again, this time directed safely into a bucket. Table 4 shows the results from this run.

Figure 34: Vehicle At New England Dyno

Data From Dynamometer	
Speed of Wheels	17.02 mph
HP	.18 hp
Torque	4.6 ft*lbf

Table 4: Data From Dynamometer

Due to the short run of the car, the data consisted of only 2 datum points which were very low. The system was predicted to produce approximately 5 hp in this arrangement and the torque was estimated at 120 ft*lbf at the wheels. That is a difference of 96%. Analysis of the data can be seen in Appendix C: Results from Dyno. If we consider the fluid equations, the pump should have produced 7.01hp. The engine data from previous MQP projects (Britton, et al., 2008-2009) provided the hp of the engine at 3200rpm, the value measured by a tachometer, to be 8.63hp

which equates to an efficiency of 82.282%. This value is within 2% of the values provided by the pump manufacturer (Hydro-Gear, 2004). The equations dictate that the motor should then produce approximately 6.5hp which results in a 73%efficent system which includes motor efficiency, head loss, and minor losses. Using the measured value of .18hp resulted in an efficiency of 2.8%.

In order for such a poor efficiency to occur, fluid within the system would have to have been lost somewhere. Video of the run on the dynamometer showed that the speed value was accurate. Angular displacement of a wheel spoke vs. time showed the wheel speed to be ~210 rpm. A torque reading of 4.6ft*lbf would then result in a power of .18hp. This is not possible though, because the drum which measures the torque of the wheels would not spin if only 4.6ft*lbf of torque was applied nor could it drive to 17mph. For these reasons, the torque reading has been discredited. It is possible that the readings received were simply noise from the devise or that it did not have time to properly measure the torque.

The trip was not a total loss though. Using the speed value measured both with the dynamometer and the video analysis, an approximate torque and power of the motor could be estimated. If the wheels where spinning at 220rpm with the motor at full displacement and a measured pressure of 1200psi, the motor would produce 6.5hp as previously predicted. Using an efficiency of 85%, derived from the manufacturer specifications (Hydro-Gear, 2004), the power would ultimately be 5.5hp. At this power and angular velocity, the motor should also produce 20.4ft*lbf of torque at the output shaft and 154.395 ft*lbf at the wheels. The system efficiency would then be 63.7% which is typical for hydraulic systems (Cundiff, 2002). This may seem disadvantageous, but at 3000psi and 21cm^3/rev, the motor can produce 385ft*lbf of torque at

the wheels. Even with an efficiency of 60%, the motor would produce 231.6ft*lbf of torque. The original transmission produced a max of 126ft*lbf.

Recommendations

Most of the problems in testing have occurred within the reservoir. Multiple solutions could improve the performance. For example, a larger reservoir would allow for safer fluid exchange. Our system would normally require at least a 10 gallon accumulator, ours is under 5. Had we calculated the weight of the reservoir filled with oil, we would have designed it to be at the bottom of the vehicle since it is the largest contributor to the vehicle weight when properly sized. This would allow the design to be more oriented around the reservoir functionality and size. It would also aid in heat exchange as it would place the reservoir further away from the engine exhaust and increase surface area. Furthermore, a sealed, pressurized reservoir would prevent ail from rapidly escaping from a vent cap. Also it would aid in providing the pump with receiving flow by pushing fluid out. This would require a pressurized bladder be installed in the reservoir. It would compress as the reservoir filled and inflate at the reservoir emptied.

After evaluating the performance and implementation of the motor throttling, this team recommends that an electronic throttling system similar to the one currently implemented on the pump be used on the motor in the future. This system would enable easier displacement control rectifying the current difficulty due to the high torque needed to displace the motor under pressure. Additionally, the throttle could be programmed to respond in a more intuitive way. Due to the nature of the pressurized system, lower displacement of the motor can actually cause an increase motor speed which is the opposite of the standard input. Controlling the displacement electronically based on interpreting user input would increase both the performance and safety of the vehicle. Also, it would allow for the motor to be precisely controlled so that it matches the

output of the pump, and it would allow the driver to select exactly when he wanted to use the stored energy in the system. Such a system would be easy to implement as there is already a microprocessor on board, and this system would eliminate the need for complex throttling and regeneration cabling for the motor, simplifying the design and placement of components.

Conclusions

The ultimate goal of this project was to gain an advantage in the SAE Baja competition by increasing power output. This team designed a system that not only quadruples the torque over the Briggs and Stratton Engine, but also approximately triples the power. This extra power came from energy storage in a hybrid-hydraulic drive train, which provides many advantages but also some disadvantages.

Due to the hydraulic components, the weight of the vehicle increased by ~150lb, which is a 30% increase, but it is coupled with a 300% increase in peak power. The system is more complex, with many more components and controls that were necessary to run the system. With more complexity comes more maintenance as well.

The advantages of this system far outweigh the disadvantages. This system attempts to use as much energy as the engine can output for the duration of its use by running the engine at max power at all times and storing any unused energy in the accumulator. This means that over the course of a race, our vehicle will be able to capture and use more energy from the engine than any other team. It is also designed to recover energy lost during braking by taking advantage of regenerative braking to charge up to 10% of its storage capacity is a single braking event.

For the Baja competition specifically, the torque performance of this drive-train is ideal. It delivers peak torque at stall and the torque increases until either you have enough to get out of stall or you hit max pressure. This means that if you are towing a log, you will have peak torque when starting the pull, which is when it is hardest to move. Not only that, but you will have more torque than almost any other team. During a hill climb there will be no delay between stall and torque delivery as well which will aid in the vehicle’s ability to summit.

Maneuverability is enhanced with the addition of reverse drive without any subsequent gearing to the system. This allows the vehicle to easily back out of situation that other cars would be trapped in. Additionally, the vehicle will have just as much torque in reverse as it does going forward, which helps greatly depending on how “stuck” the vehicle becomes. Additionally, in a situation in which the engine stalls, the drive-train provides the ability to both continue driving and start the engine as long as there is still pressure stored in the accumulator.

Given the advantages of the series hydraulic hybrid drive-train in an SAE Baja competition, it is an ideal solution to the many challenges presented. The benefits of the system far outweigh the cons of the system and the vehicle would have a sizeable advantage over any team using a traditional drive train.

Appendix A

Hose #1: Reservoir to Pump In

$Q := 8.6\frac{gal}{min}$	Flow	15W-50 Mobil 1 Synthetic Oil
$c_d := 0.6$	Orifice Coefficient	v @ 100deg C = 18.1 cSt v @ 40deg C = 131.2 cSt
$r := .375in$	Orifice Radius	100deg C = 212def F 40deg C = 104deg F
$\rho := 0.87\frac{kg}{l} = 54.312\cdot\frac{lb}{ft^3}$	Oil Density	
$v := 131.2\frac{mm^2}{sec} = 1.412\times10^{-3}\cdot\frac{ft^2}{s}$	Oil Viscosity	
$L := 22.61in$	Hose Length	
$D := .75in$	Hose Diameter	
$h := 11.53in$	Height Between Hose Ports	
$\nu := \frac{4Q}{\pi\cdot D^2} = 6.245\cdot\frac{ft}{s}$	Velocity	
$A := \pi\cdot r^2 = 0.442\cdot in^2$	Orifice Cross Sectional Area	
$N_R := \frac{\nu\cdot D}{v} = 276.402$	Reynolds Number (2.34)	

Fitting

$$P_1 := \rho\cdot.5\cdot\left(\frac{Q}{c_d\cdot A}\right)^2 = 0.635\cdot psi$$

Orifice Equation (2.45)

Hose

$$P_2 := \frac{64}{N_R}\cdot\left(\frac{L}{D}\right)\left(\frac{\rho\cdot\nu^2}{2}\right) = 1.596\cdot psi$$

Darcy's Equation (2.35)

Head

$$P_3 := \rho\cdot g\cdot h = 0.362\cdot psi$$

$$\Delta P := 2P_1 + P_2 + P_3 = 3.228\cdot psi$$

Hose #2: Pump Out to Manifold

$Q := 8.6\,\frac{gal}{min}$	Flow	15W-50 Mobil 1 Synthetic Oil
$c_d := 0.6$	Orifice Coefficient	v @ 100deg C = 18.1 cSt v @ 40deg C = 131.2 cSt
$r := .375in$	Orifice Radius	100deg C = 212def F 40deg C = 104deg F
$\rho := 0.87\,\frac{kg}{1} = 54.312\cdot\frac{lb}{2}$	Oil Density	
$v := 131.2\,\frac{mm^2}{sec} = 1.412\times 10^{-3}\cdot\frac{ft^2}{s}$	Oil Viscosity	
$L := 13.62in$	Hose Length	
$D := .75in$	Hose Diameter	
$h := 10.75in$	Height Between Hose Ports	

$$\nu := \frac{4Q}{\pi\cdot D^2} = 6.245\cdot\frac{ft}{s}$$ Velocity

$$A := \pi\cdot r^2 = 0.442\cdot in^2$$ Orifice Cross Sectional Area

$$N_R := \frac{\nu\cdot D}{v} = 276.402$$ Reynolds Number (2.34)

Fitting

$$P_1 := \rho\cdot .5\cdot\left(\frac{Q}{c_d\cdot A}\right)^2 = 0.635\cdot psi$$ Orifice Equation (2.45)

Hose

$$P_2 := \frac{64}{N_R}\cdot\left(\frac{L}{D}\right)\left(\frac{\rho\cdot\nu^2}{2}\right) = 0.961\cdot psi$$ Darcy's Equation (2.35)

Head

$$P_3 := \rho\cdot g\cdot h = 0.338\cdot psi$$

$$\Delta P := 2P_1 + P_2 + P_3 = 2.569\cdot psi$$

Hose #3: Manifold to Pump In

$Q := 20\frac{gal}{min}$	Flow	15W-50 Mobil 1 Synthetic Oil
$c_d := 0.6$	Orifice Coefficient	v @ 100deg C = 18.1 cSt v @ 40deg C = 131.2 cSt
$r := .375in$	Orifice Radius	100deg C = 212def F 40deg C = 104deg F
$\rho := 0.87\frac{kg}{l} = 54.312\cdot\frac{lb}{ft^3}$	Oil Density	
$v := 131.2\frac{mm^2}{sec} = 1.412\times10^{-3}\cdot\frac{ft^2}{s}$	Oil Viscosity	
$L := 28.85in$	Hose Length	
$D := .75in$	Hose Diameter	
$h := 3.41in$	Height Between Hose Ports	

$$\nu := \frac{4Q}{\pi\cdot D^2} = 14.524\cdot\frac{ft}{s}$$ Velocity

$$A := \pi\cdot r^2 = 0.442\cdot in^2$$ Orifice Cross Sectional Area

$$N_R := \frac{\nu\cdot D}{v} = 642.796$$ Reynolds Number (2.34)

Fitting

$$P_1 := \rho\cdot.5\cdot\left(\frac{Q}{c_d\cdot A}\right)^2 = 3.435\cdot psi$$ Orifice Equation (2.45)

Hose

$$P_2 := \frac{64}{N_R}\cdot\left(\frac{L}{D}\right)\left(\frac{\rho\cdot\nu^2}{2}\right) = 4.736\cdot psi$$ Darcy's Equation (2.35)

Head

$$P_3 := \rho\cdot g\cdot h = 0.107\cdot psi$$

$$\Delta P := 2P_1 + P_2 + P_3 = 11.712\cdot psi$$

Hose #4: Pump Out to Reservoir

$Q := 20\frac{gal}{min}$	Flow	15W-50 Mobil 1 Synthetic Oil
$c_d := 0.6$	Orifice Coefficient	v @ 100deg C = 18.1 cSt v @ 40deg C = 131.2 cSt
$r := .5in$	Orifice Radius	100deg C = 212def F 40deg C = 104deg F
$\rho := 0.87\frac{kg}{l} = 54.312\cdot\frac{lb}{ft^3}$	Oil Density	
$v := 131.2\frac{mm^2}{sec} = 1.412\times10^{-3}\cdot\frac{ft^2}{s}$	Oil Viscosity	
$L := 16.55in$	Hose Length	
$D := 1in$	Hose Diameter	
$h := 13.38in$	Height Between Hose Ports	

$$\nu := \frac{4Q}{\pi\cdot D^2} = 8.17\cdot\frac{ft}{s}$$ Velocity

$$A := \pi\cdot r^2 = 0.785\cdot in^2$$ Orifice Cross Sectional Area

$$N_R := \frac{\nu\cdot D}{v} = 482.097$$ Reynolds Number (2.34)

Fitting

$$P_1 := \rho\cdot.5\cdot\left(\frac{Q}{c_d\cdot A}\right)^2 = 1.087\cdot psi$$ Orifice Equation (2.45)

Hose

$$P_2 := \frac{64}{N_R}\cdot\left(\frac{L}{D}\right)\left(\frac{\rho\cdot\nu^2}{2}\right) = 0.86\cdot psi$$ Darcy's Equation (2.35)

Head

$$P_3 := \rho\cdot g\cdot h = 0.421\cdot psi$$

$$\Delta P := 2P_1 + P_2 + P_3 = 3.454\cdot psi$$

Hose #5: Pump Out T to Reservoir In

$Q := 20\frac{gal}{min}$	Flow	15W-50 Mobil 1 Synthetic Oil
$c_d := 0.6$	Orifice Coefficient	v @ 100deg C = 18.1 cSt v @ 40deg C = 131.2 cSt
$r := .5in$	Orifice Radius	100deg C = 212def F 40deg C = 104deg F
$\rho := 0.87\frac{kg}{l} = 54.312\cdot\frac{lb}{ft^3}$	Oil Density	
$v := 131.2\frac{mm^2}{sec} = 1.412\times10^{-3}\cdot\frac{ft^2}{s}$	Oil Viscosity	
$L := 15.86in$	Hose Length	
$D := 1in$	Hose Diameter	
$h := 0.03in$	Height Between Hose Ports	

$$\nu := \frac{4Q}{\pi\cdot D^2} = 8.17\cdot\frac{ft}{s}$$ Velocity

$$A := \pi\cdot r^2 = 0.785\cdot in^2$$ Orifice Cross Sectional Area

$$N_R := \frac{\nu\cdot D}{v} = 482.097$$ Reynolds Number (2.34)

Fitting

$$P_1 := \rho\cdot.5\cdot\left(\frac{Q}{c_d\cdot A}\right)^2 = 1.087\cdot psi$$ Orifice Equation (2.45)

Hose

$$P_2 := \frac{64}{N_R}\cdot\left(\frac{L}{D}\right)\left(\frac{\rho\cdot\nu^2}{2}\right) = 0.824\cdot psi$$ Darcy's Equation (2.35)

Head

$$P_3 := \rho\cdot g\cdot h = 9.429\times10^{-4}\cdot psi$$

$$\Delta P := 2P_1 + P_2 + P_3 = 2.998\cdot psi$$

Hose #6: Pump Case Drain to Reservoir

$Q := .89 \frac{gal}{min}$ Flow

$c_d := 0.6$ Orifice Coefficient

$r := .25in$ Orifice Radius

$\rho := 0.87 \frac{kg}{l} = 54.312 \cdot \frac{lb}{ft^3}$ Oil Density

$v := 131.2 \frac{mm^2}{sec} = 1.412 \times 10^{-3} \cdot \frac{ft^2}{s}$ Oil Viscosity

$L := 52.91in$ Hose Length

$D := .5in$ Hose Diameter

$h := 20.1in$ Height Between Hose Ports

15W-50 Mobil 1
Synthetic Oil

v @ 100deg C = 18.1 cSt
v @ 40deg C = 131.2 cSt

100deg C = 212def F
40deg C = 104deg F

$\nu := \frac{4Q}{\pi \cdot D^2} = 1.454 \cdot \frac{ft}{s}$ Velocity

$A := \pi \cdot r^2 = 0.196 \cdot in^2$ Orifice Cross Sectional Area

$N_R := \frac{\nu \cdot D}{v} = 42.907$ Reynolds Number (2.34)

Fitting

$P_1 := \rho \cdot .5 \cdot \left(\frac{Q}{c_d \cdot A}\right)^2 = 0.034 \cdot psi$ Orifice Equation (2.45)

Hose

$P_2 := \frac{64}{N_R} \cdot \left(\frac{L}{D}\right)\left(\frac{\rho \cdot \nu^2}{2}\right) = 1.957 \cdot psi$ Darcy's Equation (2.35)

Head

$P_3 := \rho \cdot g \cdot h = 0.632 \cdot psi$

$$\Delta P := 2P_1 + P_2 + P_3 = 2.657 \cdot psi$$

Hose #7: Motor Case Drain to Reservoir

$Q := 2\frac{gal}{min}$	Flow	15W-50 Mobil 1 Synthetic Oil
$c_d := 0.6$	Orifice Coefficient	v @ 100deg C = 18.1 cSt v @ 40deg C = 131.2 cSt
$r := .25in$	Orifice Radius	100deg C = 212def F 40deg C = 104deg F
$\rho := 0.87\frac{kg}{l} = 54.312\cdot\frac{lb}{ft^3}$	Oil Density	
$v := 131.2\frac{mm^2}{sec} = 1.412\times10^{-3}\cdot\frac{ft^2}{s}$	Oil Viscosity	
$L := 62.47in$	Hose Length	
$D := .5in$	Hose Diameter	
$h := 12.65in$	Height Between Hose Ports	

$$\nu := \frac{4Q}{\pi\cdot D^2} = 3.268\cdot\frac{ft}{s}$$ Velocity

$$A := \pi\cdot r^2 = 0.196\cdot in^2$$ Orifice Cross Sectional Area

$$N_R := \frac{\nu\cdot D}{v} = 96.419$$ Reynolds Number (2.34)

Fitting

$$P_1 := \rho\cdot.5\cdot\left(\frac{Q}{c_d\cdot A}\right)^2 = 0.174\cdot psi$$ Orifice Equation (2.45)

Hose

$$P_2 := \frac{64}{N_R}\cdot\left(\frac{L}{D}\right)\left(\frac{\rho\cdot\nu^2}{2}\right) = 5.191\cdot psi$$ Darcy's Equation (2.35)

Head

$$P_3 := \rho\cdot g\cdot h = 0.398\cdot psi$$

$$\Delta P := 2P_1 + P_2 + P_3 = 5.937\cdot psi$$

Hose #8: Relief to Reservoir

$Q := 20\frac{gal}{min}$	Flow	15W-50 Mobil 1 Synthetic Oil
$c_d := 0.6$	Orifice Coefficient	v @ 100deg C = 18.1 cSt v @ 40deg C = 131.2 cSt
$r := .25in$	Orifice Radius	100deg C = 212def F 40deg C = 104deg F
$\rho := 0.87\frac{kg}{l} = 54.312\cdot\frac{lb}{ft^3}$	Oil Density	
$v := 131.2\frac{mm^2}{sec} = 1.412\times10^{-3}\cdot\frac{ft^2}{s}$	Oil Viscosity	
$L := 21.94in$	Hose Length	
$D := .5in$	Hose Diameter	
$h := 2.73in$	Height Between Hose Ports	

$$\nu := \frac{4Q}{\pi\cdot D^2} = 32.68\cdot\frac{ft}{s}$$ Velocity

$$A := \pi\cdot r^2 = 0.196\cdot in^2$$ Orifice Cross Sectional Area

$$N_R := \frac{\nu\cdot D}{v} = 964.194$$ Reynolds Number (2.34)

Fitting

$$P_1 := \rho\cdot.5\cdot\left(\frac{Q}{c_d\cdot A}\right)^2 = 17.388\cdot psi$$ Orifice Equation (2.45)

Hose

$$P_2 := \frac{64}{N_R}\cdot\left(\frac{L}{D}\right)\left(\frac{\rho\cdot\nu^2}{2}\right) = 18.232\cdot psi$$ Darcy's Equation (2.35)

Head

$$P_3 := \rho\cdot g\cdot h = 0.086\cdot psi$$

$$\Delta P := 2P_1 + P_2 + P_3 = 53.095\cdot psi$$

Appendix B

```
//control variables
const int targetrpm = 3250;
const int rpm_variance = 50;
const int pump_increase = 200;
const int pump_decrease = 80;
const int  pump_neutral  =  147;//PWM varry 0-255, 183 is neutral

const int pump_pot_0dis =373;
const int  pump_pot_maxdis  =  725;//0-1023
const int  pump_pot_startdis  =  165;
const int system_max_pressure = 2900;

// Variables defining I/O pins

int pumpconPin = 10;
int buttonPin = 38;
int  pumphallPin  =  2;//interupt 2, pin 21
int pumppotPin = 0;
int pressurePin = 2;
//Initialize variables for Input sensors

int buttonValue = 0;
int pumphallValue = 0;
int pumppotValue = 0;
int pressureValue = 0;

//working variables
int rpmcount;
float rpm;
unsigned long timeold;
int pump_out_pwm = 0;
unsigned long timeprint;
float pressure=0;
float displacement=0;
float displacement_per=0;
unsigned int dis_need=0;

void setup() {
  Serial.begin(9600);
  // declare PWM OUTPUTs as outputs:
  pinMode(pumpconPin, OUTPUT);
  pinMode(buttonPin, INPUT);
  pinMode(pumppotPin, INPUT);
  pinMode(pressurePin, INPUT);

  attachInterrupt(pumphallPin, rpm_fun, RISING);
```

```
  rpmcount = 0;
  rpm = 0;
  timeold = 0;
  timeprint = 0;
}

void loop()
{
  //Read sensor values
  buttonValue =digitalRead(buttonPin);
  pumppotValue =analogRead(pumppotPin);
  pressureValue =analogRead(pressurePin);

 pressure=(pressureValue-202)*3.666;

 displacement=2*PI*1917/(.689*pressure);

 displacement_per=displacement/11.649;

  if (rpm >=1500)
    {
    dis_need=(((pump_pot_maxdis-pump_pot_0dis)*displacement_per)+pump_pot_0dis
    }
  else
    {
    dis_need=(((pump_pot_maxdis-pump_pot_0dis)*0)+pump_pot_0dis);
    }

  //read value to check, unnessisary in final code
  pumphallValue =digitalRead(pumphallPin);

  //update the rpm of the pump
  if (rpmcount >=1000)
  {
    rpm=6*rpmcount/((millis()-timeold)/1000);
    timeold=millis();
    rpmcount = 0;
    digitalWrite(13,LOW);
  }

 //Set rpm to 0 if engine is off
  if((timeold+7000)<=millis())
    {
      rpm=0;
    }
  //determine which direction pump needs to turn
```

```
if(pumppotValue<=(dis_need-45))
{
  pump_out_pwm = pump_increase;
}
else if(pumppotValue>=(dis_need+45))
{
  pump_out_pwm = pump_decrease;
}
else
{
  pump_out_pwm = pump_neutral;
}

//prevent pressurization beyond system max
if(pressure>=system_max_pressure)
{
  pump_out_pwm = pump_decrease;
}

//prevent adjustment beyond limits
if ((pumppotValue <= pump_pot_0dis+30) & (pump_out_pwm == pump_decrease))
{
  pump_out_pwm = pump_neutral;
}
if ((pumppotValue >= pump_pot_maxdis) & (pump_out_pwm == pump_increase))
{
  pump_out_pwm = pump_neutral;
}
//force back to neutral if negative displacement (remote started)
if(pumppotValue <= (pump_pot_0dis-100))
{
  pump_out_pwm = pump_increase;
}

//remote start, if engine is running, will be ignored
if ((buttonValue==HIGH)&(pumppotValue > pump_pot_startdis)& (rpm<=500))
{
  pump_out_pwm = pump_decrease;
}
else if ((buttonValue==HIGH)&(pumppotValue <= pump_pot_startdis)&(rpm<=500))
{
  pump_out_pwm = pump_neutral;
}

//prind data to serial
if ((timeprint+1000) <=millis())
```

```
  {
    Serial.print("Pump Pot");
    Serial.print("\t");
    Serial.print(rpmcount);
    Serial.println();

    Serial.print("Pressure");
    Serial.print("\t");
    Serial.print(pressure);
    Serial.println();

    Serial.print("rpm");
    Serial.print("\t");
    Serial.print(rpm);

    Serial.println();
    Serial.println();
    Serial.println();
    Serial.println();

    timeprint=millis();
  }

  analogWrite(pumpconPin,pump_out_pwm);
}

void rpm_fun()
{
  rpmcount++;
  digitalWrite(13,HIGH);
  //each rotation this incriments 10 times
}
```

Appendix C

Results From Dyno

Measured Values

$T_{dyno} := 4.6 lbf \cdot ft$ — Torque Measured By Dyno

$S_{dyno} := 17.02 mph$ — Speed Measured By Dyno

$HP := .18 \cdot hp$ — Power Measured By Dyno

$S_{engine} := 3200 rpm$ — Speed of Briggs Engine Measured By Halls Effects

$P := 1200 psi$ — Pressure Measured By Dynamic Transducer

Given Values

$G_r := 7.57$ — Gear Ratio

$D_{motor} := 21 \frac{cm^3}{rev}$ — Motor Displacement

$D_{pump} := \frac{12 cm^3}{rev}$ — Pump Displacement

$D := 26 in$ — Diameter of Wheel

$Power_{engine} := 8.63 hp$ — Measured Engine RPM from Dyno by Previous SAE Baja Teams

$\xi_{motor} := 85\%$ — Motor Efficiency provided by manufacturer

Calculations

$C_{wheel} := \frac{\pi \cdot D}{rev} = 81.681 \frac{in}{rev}$ — Wheel Circumference

$\omega_{wheel} := \frac{S_{dyno}}{C_{wheel}} = 220.039 rpm$ — Angular Velocity of Wheel

$\omega_{shaft} := \omega_{wheel} \cdot G_r = 1.666 \times 10^3 rpm$ — Angular Velocity of Motor Shaft

$T_{wheels} := \frac{HP}{\omega_{wheel}} = 4.296 ft \cdot lbf$ — Torque Value Check

$Q_{pump} := D_{pump} \cdot S_{engine} = 10.144 \frac{gal}{min}$ — Flow from Pump

$Q_{motor} := \omega_{shaft} \cdot D_{motor} = 9.241 \frac{gal}{min}$ Flow to Motor

$Power_{Pump} := P \cdot D_{pump} \cdot S_{engine} = 7.101\ hp$ Pump Power

$Pump_{Eff} := \frac{Power_{Pump}}{Power_{engine}} = 82.282\ \%$ Efficiency of Pump Calculated

$T_{motor} := P \cdot D_{motor} = 20.396\ ft \cdot lbf$ Calculated Fluid Torque at the Motor

$T_{wheels} := G_r \cdot T_{motor} = 154.395\ ft \cdot lbf$ Torque at wheels Calculated

$Power_{motor} := T_{motor} \cdot \omega_{shaft} = 6.468\ hp$ Power Calculated

$Eff_{motor} := \frac{HP}{Power_{motor}} = 2.783\ \%$ Motor Efficiency Calculated Using Dyno Readings and Calculated Power

$HP_{motor.est} := \xi_{motor} \cdot Power_{motor} = 5.498\ hp$ Estimated output power of Motor

$Eff_{system} := \frac{HP_{motor.est}}{Power_{engine}} = 63.71\ \%$ Estimated Efficiency of The System

Works Cited

Britton, D., Cusack, J., Forti, A., Goodrich, P., Lagadinos, Z., Lessard, B., et al. (2008-2009). *2008-2009 Design and Fabrication of a SAE Baja Race Vehicle.* Worcester, MA: WPI.

Casey, B. (n.d.). *Solving Hydraulic System Overheating Problems*. Retrieved April 2010, from Machinery Lubrication: http://www.machinerylubrication.com/Articles/Print/680

Cundiff, J. S. (2002). *Fluid Power Circuits and Controls: Fundamentals and Applications.* Boca Raton, Florida: CRC Press LLC.

Exxon Mobil Corporation. (2007). *Mobil 1 15w-50*. Retrieved 2010, from Mobil: http://www.mobil.com/USA-English/Lubes/PDS/NAUSENPVLMOMobil1_15W-50.asp

Hydro-Gear. (2004). *Pumps and Motors - Product Catalog.* Sullivan, IL.

Michael Shurtliff, S. B. (2005, May 16). *Dumpster Divers*. Retrieved 2009, from Hydraulic Hybrid Vehicles: http://seniordesign.engr.uidaho.edu/2004_2005/dumpsterdivers/team.htm

U.S. Enviornmental Protection Agency. (2009, December 22). *Region 9: Air Programs*. Retrieved 2010, from http://www.epa.gov/region9/air/hydraulic-hybrid/