April 2015

Assistive Multi-Purpose Mobility Device with Folding Temporary Seat

Daniel Patrick Haley
Worcester Polytechnic Institute

Taylor Michael Roseen
Worcester Polytechnic Institute

Xinping Deng
Worcester Polytechnic Institute

Assistive Multi-Purpose Mobility Device with Folding Temporary Seat

A Major Qualifying Project Proposal
Submitted to the Faculty
of
WORCESTER POLYTECHNIC INSTITUTE
in partial fulfillment of the requirements for the
Degree of Bachelor of Science
by

____

Xinping Deng

____

Daniel Haley

____

Taylor Roseen

Date: 4/30/15

Approved:

____

Professor Allen H. Hoffman, Co-Advisor

____

Professor Holly K. Ault, Co-Advisor

Abstract

Crutches and canes are widely used around the world as a means of providing stability and support for those who need them; the elderly population in particular utilizes these devices the most. There are numerous products on the market that attempt to add a seat to the crutch or cane in an effort to alleviate the stress of standing for too long. However, these products are oftentimes too cumbersome, heavy, or just simply unsafe. The goal of this project is to design and build a device that can be used as either a crutch or a cane that gives stability and helps support the weight of the user while standing and walking, additionally offering the ability for the user to rest comfortably and safely in a seated position when necessary. A first generation prototype was successfully manufactured using an existing forearm crutch and machined aluminum and steel components. The prototype underwent load and dimension tests in addition to students conducting overall usability tests.

Table of Contents

Abstract i
1.0 Introduction 1
2.0 Background 2
2.1 Canes 2
2.1.1 Purpose 2
2.1.2 Ergonomics/Types 3
2.1.3 Demographic 4
2.1.4 Problems with Canes on the market 5
2.2 Crutches 5
2.2.1 Purpose 5
2.2.2 Types 6
2.2.3 Demographics 8
2.2.4 Problems with Crutches on the market 8
2.3 Assistive Devices in the Medical Industry 9
2.4 Commercially Available Cane and Crutch Seats 10
2.4.1 Cane/ Crutch with Seat 10
2.4.2 Useful Cane/Crutch Designs 12
2.5 Functional Limitations of Mobility Device Users 13
2.6 Patents 14
2.6.1 Collapsible cane and crutch construction 14
2.6.2 Collapsible sectional Lofstrand type crutch 16
2.6.3 Length Adjustable Crutch 18
2.6.4 Crutch 20
2.6.5 Telescopic and Foldable Crutch structure 21
2.6.6 Ergonomic collapsible crutch 22
2.6.7 Combined seat and walking-cane 24
2.6.8 Folding Stool 25
2.6.9 Seat suspended between crutches 26
3.0 Design Specifications 28
3.1 List of Design Specifications 28

3.1.1 Functional/Performance of Device 28
3.1.2 Operating Characteristics 29
3.1.3 Operating Requirements 30
3.1.4 Safety 30
3.1.5 Reliability and Maintenance 31
3.1.6 Human Factors 32
3.1.7 Cost 33
3.1.8 Manufacturability 33
3.1.9 Durability 34
4.0 Preliminary Designs 35
4.1 Design 1 (Angled Leg Design) 35
4.2 Design 2 (Umbrella Design) 37
4.3 Design 3 (Slotted Shaft Design) 39
4.4 Design 4 (Kickstand Design) 42
5.0 Preliminary Static Analysis for Designs 45
5.1 Kickstand Design 45
5.1.1 Problems with Kickstand Design 46
5.2 Slotted Shaft Design 47
5.3 Angled Leg Design 52
5.4 Umbrella Design 54
6.0 0th Order prototype 57
6.1 Kickstand 57
6.2 Umbrella 59
6.3 Angled Leg Design 61
7.0 Pairwise Comparison 63
7.1 Rubrics 65
8.0 Decision Matrices 68
8.1 Initial Decision Matrix 68
8.1.1 Kickstand Design 68
8.1.2 Umbrella Design 69
8.1.3 Slotted Shaft Design 69
8.1.4 Angled Leg Design 70
8.1.5 Results 70

8.1.6 Hybrid Design 71
8.2 Revised Decision Matrix 72
8.2.1 Hybrid Design 72
9.0 Calculation of Center of Gravity of a Seated User 74
9.1 Center of Mass due to User Shifting 75
10.0 Final Design and Analysis 82
10.1 Modelling the Device in Creo Parametric 2.0 82
10.1.1 Seat Assembly 82
10.1.2 Leg Assembly 84
10.2 Changes Made to Final Design 85
10.2.1 Support Leg Bracket Re-design 85
10.2.2 Seat Design Revision 87
10.3 Static/Stress Analysis 88
10.3.1 Static Analysis 88
10.3.2 Stress on Pins 89
10.3.3 Buckling Analysis 89
Buckling of Seat Support Rods 89
Buckling of Leg Support Members 92
11.0 Component Selection 96
11.1 Aluminum Tubing 96
11.2 Aluminum Plate 96
11.3 Clevis pins 97
11.4 Snap Buttons 97
11.5 Hand Grip and Forearm Cuff 97
12.0 Manufacturing 99
12.1 Main Shaft and Support Legs 99
12.2 Seat and Support Rods 102
12.3 Collars and Leg Assembly 103
12.4 Forearm Cuff and Handle 106
13.0 Results 108
14.0 Discussion 113
15.0 Conclusion 115
16.0 Recommendations 116

Bibliography 118
Appendix A: Static Resultant Forces 120
Appendix B 126

List of Figures

Figure 1: Single Point Standard Cane (Vienna Medical, 2006) 3
Figure 2: Lightweight Adjustable Folding Cane with T Handle (Vienna Medical, 2006) 3
Figure 3: Quad Cane (Vienna Medical, 2006) 4
Figure 4: Walking Crutches with Underarm Pad and Handgrip (Vienna Medical, 2006) 6
Figure 5: Heavy Duty Lightweight Bariatric Forearm Walking Crutches (Vienna Medical, 2006) 7
Figure 6: SC Platform Crutch (smartCRUTCH, 2012) 7
Figure 7: The CrutchSeat (Lee, n.d.) 10
Figure 8: Folding Lightweight Cane with Sling Style Seat (Drive Medical, 2014) 11
Figure 9: Folding Lightweight Adjustable Height Cane Seat (Vienna Medical, 2006) 12
Figure 10: Universal Crutch (Drive Medical, 2014) 13
Figure 11: Collapsible Cane (US 3635233) 15
Figure 12: Collapsible Crutch (US 3635233) 16
Figure 13: Collapsible Forearm Crutch (US 5771910) 17
Figure 14: Collapsing Mechanism for Forearm Crutch (US 5771910) 18
Figure 15: Length Adjusting Crutch with Threaded Rod (18) (US 20120167933) 19
Figure 16: Length Adjusting Crutch with Scissor Drive (24) (US 20120167933) 19
Figure 17: Upper and Lower Member Adjusting Forearm Crutch (US 2711183) 20
Figure 18: Telescoping and Folding Underarm Crutch (US 5402811) 21
Figure 19: Ergonomic Handle Positions for Crutch (US 7434592) 22
Figure 20: Folding Mechanism (US 7434592) 23
Figure 21: Full View of Ergonomic Crutch (US 7434592) 23
Figure 22: Combined Seat and Walking Cane Device (US 1089295) 24
Figure 23: Walking Cane with Folding Stool (US 3266839) 25
Figure 24: Sling Style Seat between Two Underarm Crutches (US 6397868) 26
Figure 25: Proper Seated Position for Sling Seat between Crutches (US 6397868) 27
Figure 26: Design 1 Full Assembly 35
Figure 27: Detachable Cuff, Design 1 36
Figure 28: Front Profile, Design 1 36
Figure 29: Side Profile with Sliding Action, Design 1 37
Figure 30: Design 2 Full Assembly 37
Figure 31: Handle and Cuff, Design 2 38
Figure 32: Seat Folding Mechanism, Design 2 38
Figure 33: Base of Support, Design 2 39
Figure 34: Design 3 Full Assembly 39
Figure 35: Folding Seat Mechanism, Design 3 40
Figure 36: Unfolded Seat, Design 3 41
Figure 37: Folded Leg Support, Design 3 41
Figure 38: Unfolded Leg Support, Design 3 42
Figure 39: Overall view of Design 4 42
Figure 40: Folding seat mechanism for Design 4 43
Figure 41: Tripod attachment for Design 4 in Folded Position 44
Figure 42: Extended Tripod and Securing Clip for One Leg 44
Figure 43: Device with seat located directly above one front leg 45

Figure 44: Device with the seat located between two front legs 46
Figure 45: Dimensions of Device with Support Legs Deployed for Maximum Seat Height 47
Figure 46: Free-Body Diagram of the Device 48
Figure 47: Free-Body Diagram for the Seat 50
Figure 48: Modified Support Leg Folding Mechanism 51
Figure 49: Locking Mechanism for Seat Collar 52
Figure 50: Free-Body Diagram for the System 53
Figure 51: Seat Layout and Static Analysis 54
Figure 52: Umbrella Design Leg in Folded and Unfolded Position 55
Figure 53: Lengths of Critical Leg Lengths AB and CB 56
Figure 54: Kickstand Design Folded 57
Figure 55: Kickstand Unfolded 58
Figure 56: Static Kickstand Model 59
Figure 57: Umbrella Design Leg Support in Cane/Crutch Position 60
Figure 58: Umbrella Design Leg Support in Seat Position 60
Figure 59: Angled Leg Design in Cane/Crutch Position 61
Figure 60: Angled Leg Design in Seat Position 62
Figure 61: 3D model of Hybrid model with legs folded against main shaft 71
Figure 62: 3D model of bracket 72
Figure 63: Planes of the Body 74
Figure 64: Body Segments for Center of Gravity Calculations 76
Figure 65: User Sitting Upright 76
Figure 66: User Leaning to the Left/Right 77
Figure 67: User Leaning both Forwards and to the Side 79
Figure 68: User Leaning Forward and to the Side with Extended Arms 80
Figure 69: Seat Assembly and Joints 83
Figure 70: Leg Assembly 84
Figure 71: New Folding and Locking Mechanism 85
Figure 72: Support Legs in Locked in Cane/Crutch Position 86
Figure 73: Legs in Deployed Position showing stop pin 87
Figure 74: Full Seat Assembly 88
Figure 75: Angles Required for Axial Loads 90
Figure 76: Angle Required for Axial Loads on Support Legs 93
Figure 77: Support Legs and Telescoping Sections 99
Figure 78: Main Shaft with Drilled Holes 100
Figure 79: ESPRIT Program for Drilling Holes in Support Leg 101
Figure 80: ESPRIT Program for Milling Slot in Leg Support 101
Figure 81: Telescoping tube for Main Shaft with Snap Buttons 102
Figure 82: L-Shaped Brackets for Seat Assembly 102
Figure 83: Seat Assembly with U - Brackets and Support Rods 103
Figure 84: Top Collar ESPRIT File for Milling Machine 104
Figure 85: Bottom Collar ESPRIT File for Milling Machine 105
Figure 86: Leg Assembly Bracket ESPRIT File for Milling Machine 105
Figure 87: Leg Assembly 106

Figure 88: Handle/Cuff Assembly with Main Shaft 107
Figure 89: Device without Seat and Leg Support Attachments 109
Figure 90: Device Supporting Weight of Person 109
Figure 91A: Full Seat Assembly 120
Figure 92B: Forces on Pin in Y and Z Directions 126

List of Tables

Table 1: Functional Limitations of Crutch and Cane Users 13
Table 2: Pairwise Comparison Table 64
Table 3: Weighting of Design Specifications 65
Table 4: Initial Design Matrix 68
Table 5: Final Decision Matrix Including Hybrid Design: 72
Table 6: Lengths and Weights of Body Segments 77
Table 7: Calculations for Sitting Upright without lean 78
Table 8: Calculations for Sitting Upright with Left/Right Lean 79
Table 9: Calculations for Leaning Forward and to the Side 80
Table 10: Calculations for Leaning Forwards and to the Side with Extended Arms 81
Table 11: Resultant Forces on Seat Support Rod 90
Table 12: Area Moment of Inertia 91
Table 13: Axial Forces Along Leg Support Shafts 92
Table 14: Area Moment of Inertia 94
Table 15: List of Design Specifications and Whether They Were Met 110
Table 16A: Resultant Forces on Seat Assembly 120
Table 17A: Resultant Forces on Leg Assembly 123
Table 18B: Shear Stresses on Pins when Weight is at the Center of the Seat 127
Table 19B: Shear Stresses on Pins when Weight is at the Front of the Seat 127
Table 20B: Shear Stresses on Pins when Weight is at the Side of the Seat 127

1.0 Introduction

Assistive mobility devices such as canes and crutches have become more widely used over the years as new innovations and market sizes have increased (Kaye, 2000). For example, new materials allow the devices to be stronger yet lighter than previous devices. The largest population of people who use these devices (those above the age of 65) is increasing. These devices are generally used to increase the user's base of support (BOS) which, in turn, increases stability. Additionally, they also provide weight support for the user; canes rarely support more than 20% of the weight of the user while certain types of crutches can support nearly 80% of the user's body weight (Bateni and Maki, 2005, Harrington and Joines, 2011).

Over 4.5 million people in the U.S. use canes and over 500,000 people use crutches (Kaye, et al. 2000). Of the 4.5 million people who use canes, roughly 3.2 million of them are over the age of 65. In addition, 155,000 crutch users are also over the age of 65 (Kaye, et al. 2000). Since the population of the elderly is expected to rise in the future due to better healthcare and standards of living, the need for these devices will also only increase.

Many canes and crutches on the market have been built so as to fulfill an additional purpose other than simply providing weight support or stability. Examples include additional storage space for everyday items, extra handles to aid in standing up, and an included seat so the user can rest for a period of time. Canes and crutches with incorporated seats have become more popular since their largest user base is the elderly who need frequent rest. However, there are problems associated with many of the devices with incorporated seats such as being too bulky and not feeling sturdy enough.

The goal of this project is to design and build a device that can be used as either a forearm crutch or a cane that gives stability and helps support the weight of the user while standing and walking, additionally offering the ability for the user to rest comfortably and safely in a seated position when necessary. To accomplish this goal, we will research the strengths and weaknesses of canes and crutches, analyze existing products with seats, develop preliminary designs, select a final design, analyze the final design, manufacture the device, and test the device.

2.0 Background

In order to develop an assistive cane/crutch with an incorporated seat, it’s important to understand the many aspects of canes and crutches. This section will explain the purpose of both canes and crutches in addition to their specific types, the demographics that use them, and the common problems associated with these devices. Additionally, this chapter will briefly cover the popularity of assistive mobility devices in the medical industry and discuss examples of commercially available canes/crutches with seats. Finally, the common functional limitations of mobility device users will be discussed along with useful patents that have been developed to improve upon canes and crutches.

2.1 Canes

2.1.1 Purpose

Users of canes usually use a cane for increased balance and stability, along with some minor load bearing. Canes are not designed to help load bearing as much as a crutch since all the weight would be placed on the user's hand and wrist. Cane users rarely place more than 15% to 20% of their weight on the cane during normal use (Beteni, 2005). There are some reports of higher axial loads (closer to 30%) with users that required total knee or hip replacement while using standard canes. While not ideal for load bearing, canes give a sense of safety to many users along with an increase in balance and stability (Beteni, 2005). The cane acts to give the user a larger base of support (BOS) making it much easier to keep the users center of mass (COM) within the base of support.

The increase in confidence and a greater feeling of safety encourages the users to be more independent and participate in a general level of activity. This is a great psychological benefit as the users feel better about themselves not having to rely on other and allowing them to continue other hobbies (Beteni, 2005). The physiological benefits of cane use include prevention of osteoporosis and cardiorespiratory deconditioning along with enhanced circulation (Beteni, 2005).

2.1.2 Ergonomics/Types

Walking canes come in a variety of variations and models each with their benefits and drawbacks for different users. There is of course the basic walking cane as shown in Figure 1; it is a long cylindrical tube with a handle on the top that is usually made of wood or aluminum. This is the simplest design with the least weight and is the most popular cane type.

Figure 1: Single Point Standard Cane (Vienna Medical, 2006)

Some folding canes (Fig. 2) have the same functionality as the basic cane but have the added benefit of being foldable. This makes it easier for the user to transport the cane or store it in a smaller place. In order for the folding function to be useful the user must have the physical and cognitive ability to operate the folding mechanism; some folding mechanisms may be more difficult to operate than others.

Figure 2: Lightweight Adjustable Folding Cane with T Handle (Vienna Medical, 2006)

Another type of cane is the quad cane (Fig. 3). The major difference between the quad cane and a basic cane is how the cane contacts the ground. The quad cane has 4 separate footers arranged in a small rectangular pattern instead of the single footer on the basic cane. This allows the quad cane to stand on its own, along with giving the user more balance. It can be awkward for a basic cane user to walk with a quad cane as it is more bulky. Users of quad canes may also have problems with the large base coming into contact with their feet during walking, which can pose a tripping risk.

Figure 3: Quad Cane (Vienna Medical, 2006)

There are also tripod canes which often have an attached seat. These canes usually have one foot in contact with the ground like the basic cane. However, they have two additional legs that fold parallel to the central cane body. When unfolding them into seats, the seat slides down while the legs fold down to create a tripod for the base of support. The user can then sit on the seat and take a break from either walking or standing. This cane helps those users who cannot walk far distances without a break or cannot stand for long periods of time by giving them a portable seat. They also are bulky and are not easily stored. This will be explained in more detail in Chapter 2.4.1.

2.1.3 Demographic

Walking canes are most commonly used among the elderly population as a mobility device. Between the ages of 18-64 there are an estimated 1,535,000 people in the United States who are cane users. These users are from a non-institutionalized, community resident population.

The estimated population of cane users over the age of 65 is 3,200,000 (Kaye, et al. 2000). Two thirds of all cane users are over the age of 65. Of the population between 18-64 years old, only 45% of the users are female. The number of female users of canes increases dramatically in the user group aged 65 or over, with 63% of cane users in this age group being female (Kaye, et al. 2000).

Some possible reasons for the large increase in female cane users after the age of 65 are the average lifespan of males and females, and the loss of strength in the elderly. Females on average live longer lives than men and so as the data approaches the elderly population there will be a greater number of women living than men (U.S. Department of Commerce, 1995). This would most likely explain the fact that there are more females than males using a cane after the age of 65, but the relative loss of strength as women age could also explain the large jump in female cane users. As a person ages they begin to lose strength in both their upper and lower body, however women often lose their strength faster than men (U.S. Department of Commerce, 1995). This means that as a person gets older they will have more trouble walking far distances or standing for long periods of time; this will begin to affect females earlier than males of the same age.

2.1.4 Problems with Canes on the market

Some of the problems with cane use are upper body injuries, falls resulting in improper cane use, and the stigma attached to the use of a cane. Any one of these factors can cause the abandonment of a cane or, more seriously, injuries to the user. Upper body injuries are reported among users of many mobility aids such as canes, crutches, or walkers. Most of these injuries are overuse injuries from the chronic use of a cane and the repeated stress put on upper-extremity joints (Beteni 2005). The chronic use of canes can cause osteoarthritis, tendinitis, and carpal tunnel syndrome. Those users with arthritis, which is prevalent in the elderly, can experience significant joint inflammation from the repetitive forces of cane use.

2.2 Crutches

2.2.1 Purpose

The purpose of crutches is to provide more weight support so as to alleviate nearly all of the weight on the affected limb. The amount of weight the crutch can support depends upon the type of crutch used. The axillary crutch is designed to support the most weight, followed by the forearm crutch and platform crutch (Harrington and Joines, 2011).

Another important use for crutches is to allow those who wouldn't normally be able to walk by themselves the ability to do so. The crutch assists upright movement and transmits sensory cues through the hands (Samsonaite, 2008). People with partial paralysis benefit from crutches because they promote upright posture and allow them to maneuver through places they might otherwise not be able to access with a wheelchair.

Crutches are beneficial for those who have difficulty walking, suffer from leg or foot pain, weak muscles, or an unstable gait (Samsonaite, 2008). The health benefits of regaining upright body movement through the use of crutches are quite positive; they include improved circulation, assisting kidney and lung functions, and helping prevent calcium loss from bones. While similar to canes in that they help provide support and stability, crutches differ in that they are designed to transfer bodyweight away from affected limbs and allow the user to be more mobile.

2.2.2 Types

There are three major variations of the crutch that each perform in a slightly different way; they are the axillary crutch, the forearm crutch, and the platform crutch (Harrington and Joines, 2011). The axillary crutch (Figure 4) is the most popular crutch in the United States. These crutches extend from the floor up to the armpit and allow for the user to transfer roughly 80% of their body weight to the crutch (Harrington and Joines, 2011).

Figure 4: Walking Crutches with Underarm Pad and Handgrip (Vienna Medical, 2006)

The forearm crutch (Figure 5) extends from the floor up to the hand and then continues up to the forearm at angle so as to provide between 15 and 30 degrees of flexion at the elbow. This flexion allows for the forearm to bear more weight than it would if an underarm crutch was used. However, on average, forearm crutches can only support roughly 40-50% of the user's body weight (Harrington and Joines, 2011).

Figure 5: Heavy Duty Lightweight Bariatric Forearm Walking Crutches (Vienna Medical, 2006)

The platform crutch (Figure 6) is very similar to the forearm crutch however the angle at which the elbow rests is roughly 90 degrees. This allows for more weight to be supported on the arm instead of the hand and is often used by patients who have weaker handgrips (Harrington and Joines, 2011).

Figure 6: SC Platform Crutch (smartCRUTCH, 2012)

2.2.3 Demographics

Compared to canes, crutches are used by a significantly smaller proportion of the population. Between the ages of 18 and 64, approximately 375,000 people use crutches (Kaye, et al. 2000). Above the age of 65 there are an estimated 155,000 crutch users. Studies of assistive device users show that there are a fewer elderly users of crutches as compared to canes. Of the people in the 18-64 age bracket, 0.28% of males (221,000) and 0.19% of females (154,000) use crutches (Kaye, et al. 2000). In the 65 and over age bracket, 0.63% of males (82,000) and 0.4% of females (73,000) use crutches.

This is almost completely opposite of the cane statistics in that there are more male users of crutches than female and that in the elderly, female crutch users are not the majority. This is most likely due to the fact that crutches require much more strength in the user's upper body as compared to canes. Males tend to be stronger than females which would explain why there are more male users than female users of crutches. As we get older, our bodies lose strength; this would explain why the population of elderly users of crutches is much lower compared to population of elderly users of canes.

2.2.4 Problems with Crutches on the market

While there are many benefits to crutch use, there are also some drawbacks that should be taken into account before using them. Since the elderly population is more susceptible to injuries, they should take care when operating crutches, especially axillary crutches. Axillary crutches have been known to cause injuries such as upper-limb overuse injuries, shoulder-joint degeneration, injuries to the arms, hands and pectoral areas, and carpal tunnel syndrome (Harrington and Joines, 2011). Many of these injuries can be attributed to the fact that axillary crutches are designed to take much more bodyweight than other types of crutches. Therefore, there are larger forces acting on the user's body, especially the underarm, resulting in injuries. Additionally, since crutches take so much weight off of the body, the user must have sufficient arm strength, balance, and coordination to use them properly and effectively (Samsonaite, 2008).

2.3 Assistive Devices in the Medical Industry

The medical industry as a whole is a growing industry due to the increasing number of senior citizens in the United States. Assistive mobility devices are used primarily by the elderly and so there is a growing market for devices of this nature. The main industries that affect mobility related assistive devices in the market are medical supplies wholesaling, online medical supply sales, and occupational and physical therapists.

Medical supplies wholesale is the industry where hospitals, clinics, and alternate care providers purchase their supplies and devices. This industry is worth $157 billion in the US alone (IBISWorld, 2014). The Orthopedic and hospital supplies category, which includes canes and crutches, accounts for 29.7% of that revenue every year.

The online medical supply industry offers a way for the individual at home to buy medical supplies. These sales are often people buying medical supplies for themselves or possibly close family members. The online medical supply industry is a $4.4 billion industry every year in which orthopedic and prosthetic appliances account for 10% of the revenue (IBISWorld, 2014). Again, canes and crutches along with other mobility aids fit into this category. Individual consumers account for 17% of the market for online medical supplies sales.

Occupational and physical therapists play a large role in the sales and usage of mobility related assistive devices. Orthopedic physical therapy accounts for 48.1% of the industry's services. Many of the patients in orthopedic physical therapy are those that would need a mobility aid such as a crutch or cane. Geriatric physical therapy is another 8.7% of the industry, and the elderly in physical therapy are more likely to need mobility aids than any other group (IBISWorld, 2014).

The major markets for physical and occupational therapy are females with musculoskeletal conditions at 35.4% followed by males with musculoskeletal conditions at 28.0% (IBISWorld, 2014). Musculoskeletal conditions involve the muscles, bones, and sometimes joints and are often chronic conditions. Some of the major conditions are back pain, osteoarthritis, arthritis, osteoporosis and other joint afflictions. These are patients that are often in need of mobility aids to deal with their joint, bone, or muscle pain every day. Osteoarthritis, or degenerative joint disease, is the most common diagnosis with 81% of physical therapists seeing patients with that condition routinely. Osteoarthritis is also the major reason for cane and crutch use in the United States (Kaye, et al. 2000).

2.4 Commercially Available Cane and Crutch Seats

There are several kinds of crutch/cane products with incorporated seats in the market. However, many of them either have their own restrictions or might cause problems for the users.

2.4.1 Cane/ Crutch with Seat

In terms of a crutch with an incorporated seat, there is a product called The CrutchSeat which has 3 parts: two crutches and one seat accessory that can be assembled between the two crutches (Fig. 7). When operating as a seat, the device only has 2 points that contact ground which means it is impossible for the crutch to provide stability by itself. This sling style crutch does provide comfort for users after a long time of walking; nevertheless, in order to maintain stability, it requires the user to put their arms on the top of the crutches to prevent the crutches from collapsing. In addition, the user needs enough balance so as to prevent the crutch from falling backwards or forwards. The advantages of this type of product are that it provides a relatively comfortable seat; moreover, the seat is comparatively higher than cane seats on market, which will be relatively easier for users to sit down and stand up. The disadvantage would be that it requires users to keep balance by using their hands and feet, which might be unsafe for those people who have osteoarthritis.

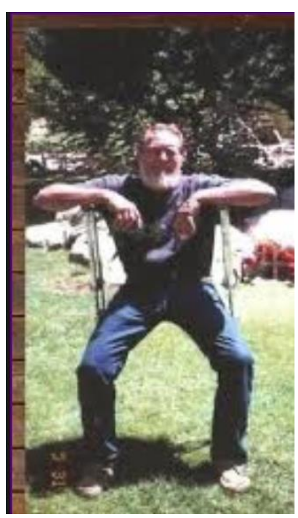

Figure 7: The CrutchSeat (Lee, n.d.)

In terms of a cane with an incorporated seat, there are two examples of canes that are relatively popular. The first one is called Cane with Sling Style Seat (Fig. 8). Contrasting with The CrutchSeat, it has 4 support points at the base, which would allow users to sit with their hands and feet completely free from loading. The Cane with Sling Style seat has two main inverted U-shaped parts with a sling connected between them. The two main parts are connected by a pin which makes it possible to fold and extend. Users can take advantage of the handles of the two U-shaped parts by using them as armrests while sitting in addition to using them for support while standing. The problem of this kind of cane is that, when sitting down, it is recommended that the users straddle the cane seat, requiring more dexterity than an elderly user may be capable of. The reason for sitting this way is to prevent users from leaning or falling backward while seated. One advantage of this cane is that it provides both safety and comfort while seated. A major disadvantage is that the device is not convenient for people who aren't very dexterous.

Figure 8: Folding Lightweight Cane with Sling Style Seat (Drive Medical, 2014)

Another example of a cane with a seat incorporated into it is the Deluxe Folding Cane Seat (Fig. 9). The seat is attached onto the main shaft of the cane and connected to a two-pole component. When transforming from a cane to a temporary seat, the two-pole component will rotate into a tripod position and, together with the main shaft, create a three-pole base. The seat will be slid down from a vertical position to a horizontal position. An advantage of this cane is that it is quite safe and stable in addition to being very easy to operate. One major disadvantage to this cane is that the support legs stick out when in the cane position, causing the cane to be much wider.

Figure 9: Folding Lightweight Adjustable Height Cane Seat (Vienna Medical, 2006)

2.4.2 Useful Cane/Crutch Designs

Even though some types of crutches do not have the seat feature, it may still be useful to look at other crutches/canes on the market to determine advantages and disadvantages in the designs.

The Universal Folding Crutch is designed for all age users (Fig. 10). Since heights differ significantly from child to adult, it can be adjusted to a minimum of 27 inches and maximum of 52 inches in height. The crutch is composed of two parts which are a height-adjustable arm section and a height-adjustable leg section. The height-adjustable aspects of this crutch will be beneficial to study so as to potentially widen the margin of people who would be able to use our crutch/cane.

The section above the hand grip is called the arm section and the section below the hand grip is called the leg section. For both the arm and leg sections, the shafts have the same design as a normal height adjustable crutch. The arm section consists of the shaft on top and the shaft at middle. The height of the arm section can be adjusted by sliding the shaft on top up and down. The leg section includes the shaft at the center and the shaft at bottom. The height of the leg section can be adjusted by sliding the bottom shaft up and down. For this specific crutch, a one button adjusting design was utilized.

Figure 10: Universal Crutch (Drive Medical, 2014)

2.5 Functional Limitations of Mobility Device Users

Many cane and crutch users have one or more specific functional limitations that hinder their ability to perform every day activities. In order to gauge the limitations of mobility device users, respondents were asked whether they had "some difficulty, a lot of difficulty, or were completely unable" to lift 10 lbs., climb stairs, walk ¼ mile, and stand for 20 minutes (Kaye, Kang, and LaPlante, 2000). Table 1 summarizes the total number of people who have these functional limitations. While there are a significant number of people who are strictly unable to do these activities, the focus will be on the people who only have difficulty with them because a new crutch/cane design will benefit them the most.

Table 1: Functional Limitations of Crutch and Cane Users

Functional Limitation	**Number of Cane Users** (4.7 million total)	**Number of Crutch Users** (530,000 total)
Difficulty Lifting 10 lbs.	1,200,000	139,000
Difficulty Climbing Stairs	2,066,000	208,000
Difficulty Walking ¼ Mile	1,873,000	196,000
Difficulty Standing for 20 mins.	1,924,000	197,000

These statistics are important when trying to design a cane or a crutch so that it can be designed to help aid these people who have difficulty with one or more of these activities. The statistic about standing for 20 minutes is especially significant because it points towards a user base that could potentially benefit from a cane or crutch with a built-in seat.

2.6 Patents

In order to develop a crutch with the ability to fold into a seat, it's important to look at existing patents. They will give us an idea of what products are in the market and what features can be improved upon. This section contains collapsible forearm and underarm crutch patents in addition to crutch and seat patents with incorporated seats.

2.6.1 Collapsible cane and crutch construction

US 3635233 A 1970

It would be nice for our device to have the ability to be collapsed or folded for transportation or storage. Patent number 3635233 is a segmented cane construction that utilizes a tension cord to hold it in a locked position when under tension. Once the tension is released the segments can break apart and the cane can be collapsed to a much smaller size. The design is also employed in a forearm crutch along with an adjustable forearm cuff and an adjustable handgrip. The goal of this device is to retain the rigid support of a typical cane or crutch while being able to fold the device into a very small size when not in use. Figure 11 shows the interlocking, tubular segments (10, 12, 15, 14) which are held in engagement by the tension cord (18). When the segments are pulled apart the interlocking segments can be folded into the compact space of a briefcase or handbag.

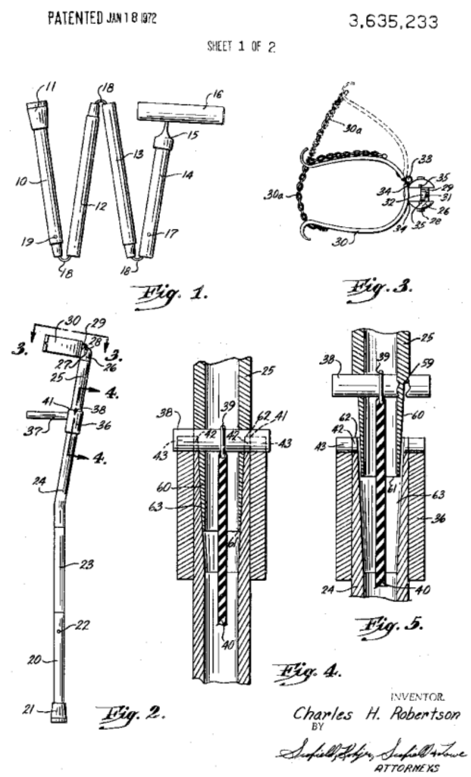

Figure 11: Collapsible Cane (US 3635233)

Figure 12 shows an underarm crutch utilizing a similar design of a tension cord (77) inside interlocking, tubular segments. The method of interlocking is slightly different as a spherical ball member (75) sits between the truncated hemispherical ball seats (69, 74) when the segments are connected together. This ball joint in the segments automatically self-aligns the segments when they are brought together. The benefit of this design is its relative simplicity along with its compact folded size. Some drawbacks of this design for our target group might be the requirement to pull the segments apart from each other. While not a difficult activity for an able-bodied user, it might prove difficult for an elderly user.

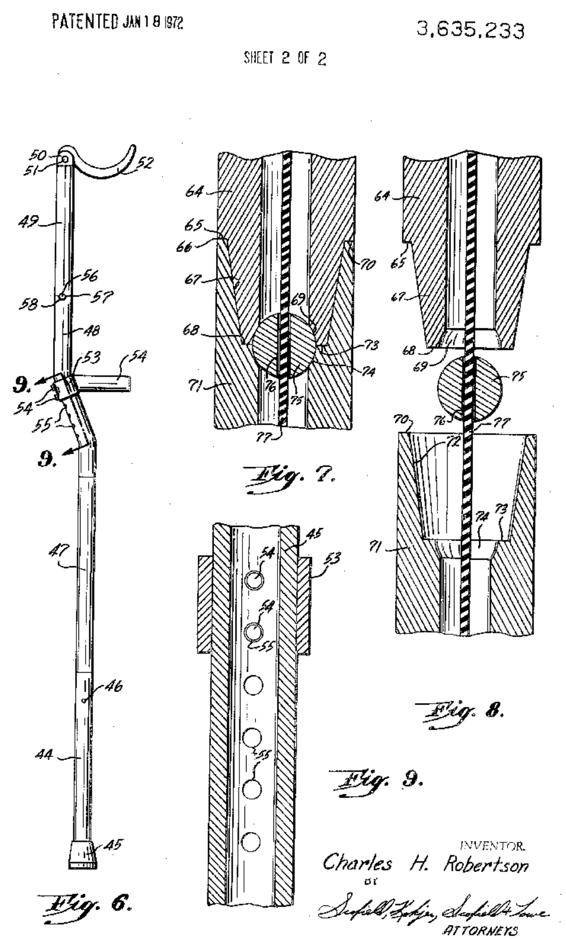

Figure 12: Collapsible Crutch (US 3635233)

2.6.2 Collapsible sectional Lofstrand type crutch

US 5771910 A 1997

The device for our target group must have the ability to be folded into a compact size for storage or transportation. Patent number 5771910 is a forearm crutch that consists of four telescoping sections (Fig. 13).

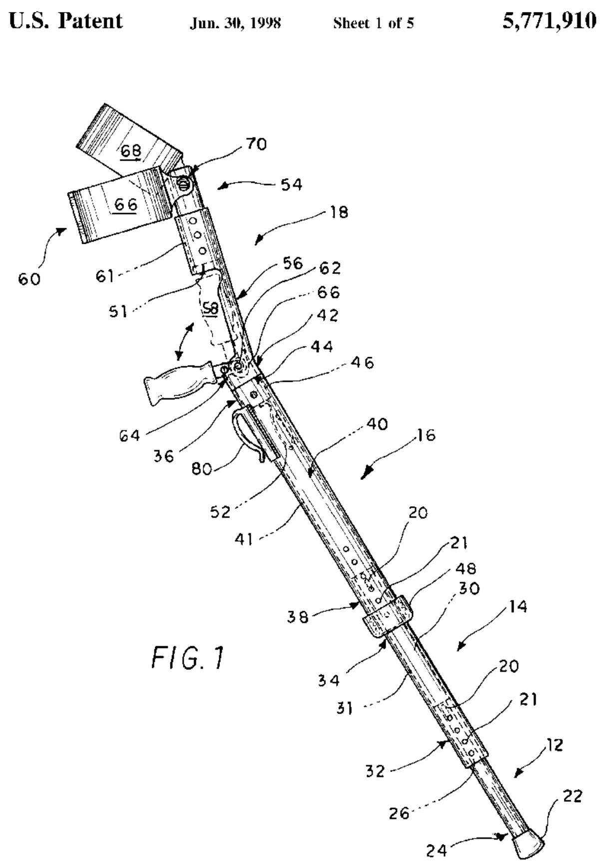

Figure 13: Collapsible Forearm Crutch (US 5771910)

The forearm cuff (60) can also be folded down so that it lays flat along the length of the crutch. The cuff is a split sleeve so that it can be folded down against the sides of the tubular support member (18). The protrusions of the handle and forearm cuff were the limiting factors in the folding of a forearm type crutch to a compact size before this design. The benefits of this design are in these folding components to minimize size of a folded forearm crutch. In Figure 14, the handle (50) can be folded into a recess (58) so that the folded crutch can be more streamlined for folding and storage.

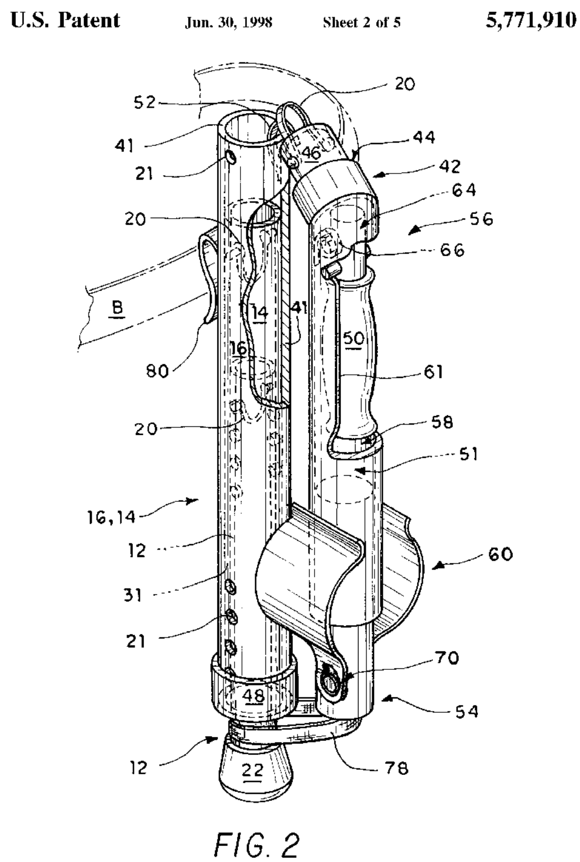

Figure 14: Collapsing Mechanism for Forearm Crutch (US 5771910)

2.6.3 Length Adjustable Crutch

US 20120167933 A1 2012

This crutch has the typical underarm support structure. There is a length adjustment mechanism to adjust the separation between the lower support structure and the tip of the crutch. There are two different adjusting mechanisms, a threaded rod (18) with an electric drive motor (19) for the lower support structure to be adjusted (Fig. 15) or a scissor drive mechanism (Fig. 16) in conjunction with a pair of hydraulic or pneumatic rams (21). The goal of each of these two designs is adjusting the height of the crutches using an actuation button (27) instead of a manual way of height adjustment. This would be an excellent feature for a user that might not have the cognitive or physical ability to manually adjust the crutch height. However, with both of these mechanisms they would add a significant amount of weight to the crutch. This increase in weight may alienate the users that could benefit from a one button height adjustment feature.

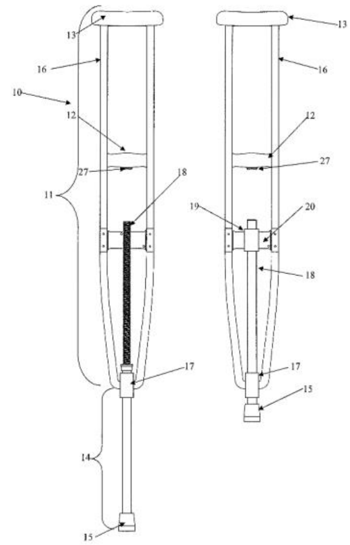

Figure 15: Length Adjusting Crutch with Threaded Rod (18) (US 20120167933)

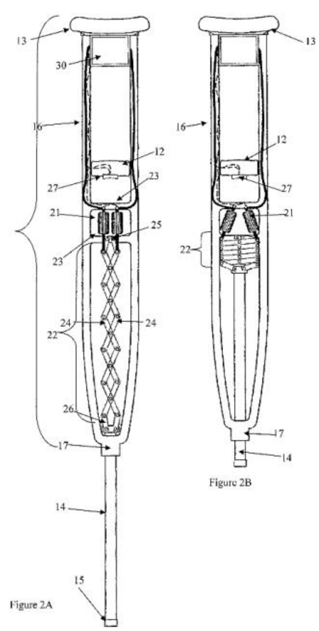

Figure 16: Length Adjusting Crutch with Scissor Drive (24) (US 20120167933)

2.6.4 Crutch

US 2711183 A 1951

This is a Lofstrand crutch designed to be adjustable both below the handle and above the handle (Fig. 17). In this way the height can be adjusted properly along with the position of the cuff along the forearm. The telescoping upper tubular member (15) telescopes within the upper tubular member (14). There is also the telescoping lower tubular member (12) that telescopes within the lower tubular member (11). The tubular members are kept at a certain setting by means of U shaped springs (17) and (21). The benefits of this design are two separate means of adjustment for the user. This offers the user a more ergonomic fit and makes the device more comfortable to use. The issue with this design is the U shaped springs that adjust the device. These small buttons must be depressed and then the telescoping member moved to the proper position. This task may prove difficult for the elderly to accomplish depending on their fine motor skills.

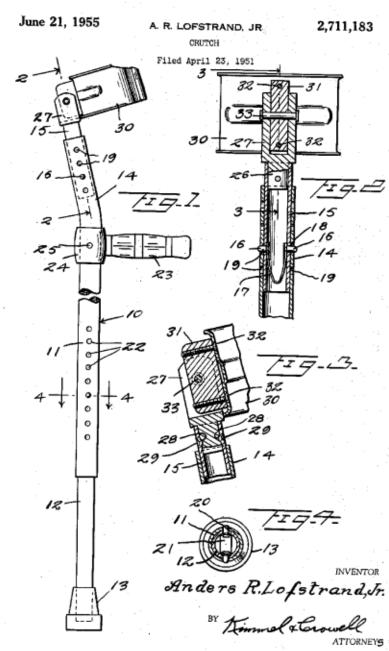

Figure 17: Upper and Lower Member Adjusting Forearm Crutch (US 2711183)

2.6.5 Telescopic and Foldable Crutch structure

US 5402811 A 1994

This design is an underarm crutch that includes telescopic inner (2) and outer tubes (3) along with a locking cam (50) (Fig. 18). The adjusting outer tube (6) can be tightened by the locking cam (50). The locking cam can be pulled upwards so that the outer coupling tubes (5) can be folded upwards. The handle (4) is designed to be rotated for uncoupling the telescopic inner tubes (2) from the telescopic outer tubes (3). This allows the height of the crutch to be adjusted by rotating the handle of the crutch. The benefits of this design are multiple methods of height adjustment to fit any user correctly. Also the crutch can be folded and shortened to half of its height for ease of transportation and storage. The twisting of the handle is also an interesting feature that makes it more convenient and simpler for the user to adjust the height of the crutch. If we were to use ideas from this device we would need to modify them for a forearm crutch type of device.

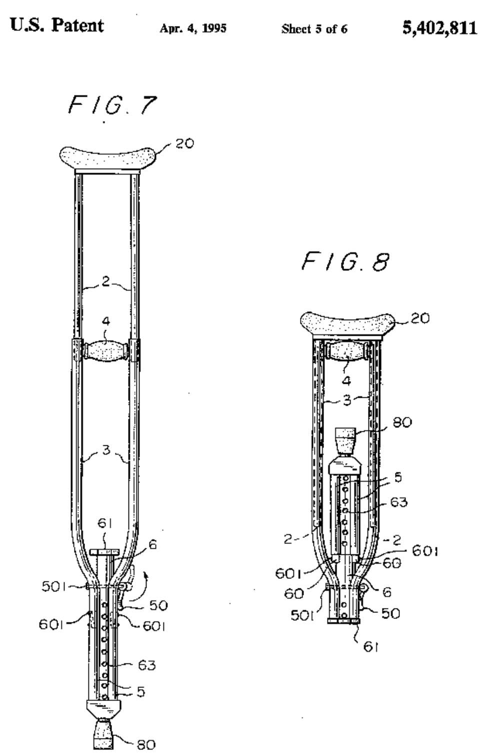

Figure 18: Telescoping and Folding Underarm Crutch (US 5402811)

2.6.6 Ergonomic collapsible crutch

US 7434592 B2 2004

This is an ergonomic collapsible crutch that can include shock absorption (spring-loaded) device, a method of adjusting the height of the crutch using a series of buttons (Figure 20), and the ability to alter the angle of the handgrip for different positions (Figure 19). The handgrip (103) can be moved through a range of angles so that the wrist of the user maintains a neutral position. There is also an ergonomically designed hand grip for the user and the ability for the crutch to fold in half. The handgrip (103) is 4-5 inches long and has a diameter 1 cm smaller than a patient's inside grip diameter. Both of these specifications make sure the force is distributed evenly along the hand.

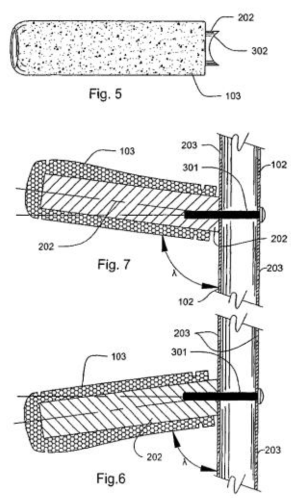

Figure 19: Ergonomic Handle Positions for Crutch (US 7434592)

The folding of the crutch is accomplished by using the dual push buttons (540) and pulling apart the upper member (102) and the lower member (115) as seen in Figure 20. The two buttons (540) can be depressed in order to fold the crutch into its upper and lower members. There is an option for these buttons to have an increased diameter. This would make it easier for users with lack of fine motor skills.

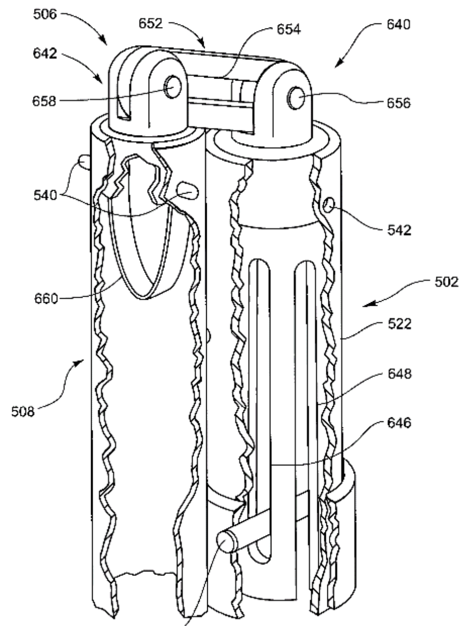

Figure 20: Folding Mechanism (US 7434592)

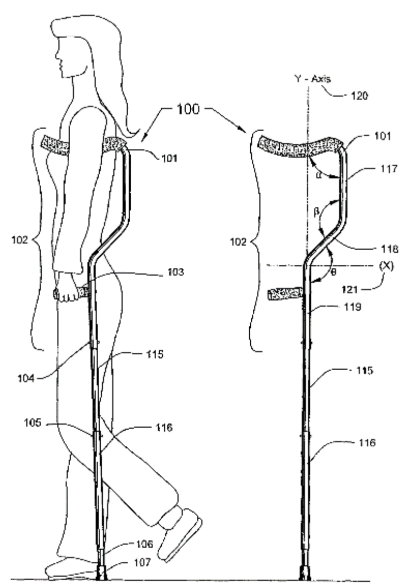

Figure 21: Full View of Ergonomic Crutch (US 7434592)

2.6.7 Combined seat and walking-cane

US 1089295 A 1914

The bottom half of the cane is comprised of three extension members, that when folded up act as a normal walking cane (Fig. 22). The extension members (6) are connected via hinge, and when necessary they can be extended and form a square as a base of support for the seat. The leaves (2) are connected to the pedestal (1) by hinges that when folded constitute a handle, and when extended out form a seat. The sliding rod (13) can be pulled downwards to bring the lower members (6) outwards to form the base of support. The cogs on the sliding rod (16) will mesh with the cogs on the extension members (9). These cogs make the legs extend or retract based on whether the rod is pulled downwards or pushed upwards. The studs (10) abut the last teeth on the cogs (16) to ensure the extension members do not move any further outward. This device shows one method of providing a base of support from a single vertical support member such as a cane. This is one option that we could reasonably implement in our own device with slight modifications.

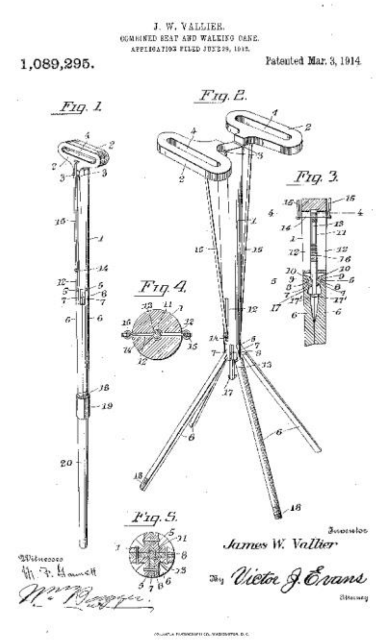

Figure 22: Combined Seat and Walking Cane Device (US 1089295)

2.6.8 Folding Stool

US 3266839 A 1964

This is a walking cane combined with a folding stool. The stool folds up to the side of the crutch during normal usage, and can be positioned away from the user because of a 180 degree rotation of the handle (Fig. 23). The stool is supported by a tripod when in use. The seat (10) is connected to the walking cane (13) by a hinge pin (14) which allows the seat to fold open. The legs (12) fold parallel to the cane when it is in use as a walking aid. When the seat is folded out the legs are perpendicular to the bottom of the seat while the bottom of the cane (16) provides balance for the user. This design is similar to one of the most popular walking cane seats on the market. It is a simple design that does not hinder the functionality of the cane as a walking aid but also provides a convenient seat. The main difference between the products on the market and this design are that the legs on current products are not perpendicular to the bottom of the seat. Instead the legs are at an angle that places them further forward to spread the base of support, which makes it more stable than the design of this device.

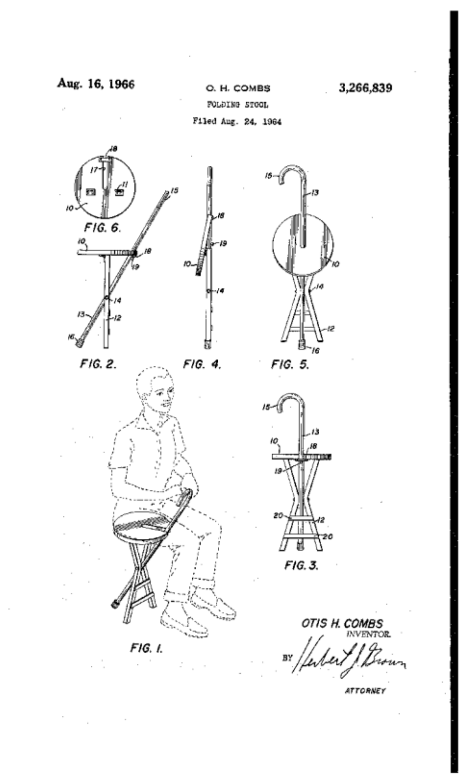

Figure 23: Walking Cane with Folding Stool (US 3266839)

2.6.9 Seat suspended between crutches

US 6397868 B1 2000

This patent is a sling (4) suspended between two underarm crutches which acts as a place for the user to rest (Figures 24 and 25). The seat hangs below and behind the user when the user is walking with the crutches. User balances on the seat using the two crutches and their own feet. The user fastens the sling to the device by going around the underarm pads (5) and tying a knot (22).

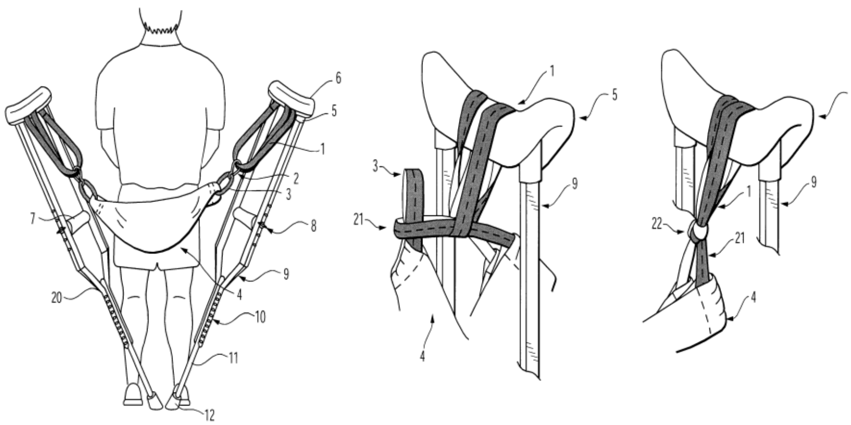

Figure 24: Sling Style Seat between Two Underarm Crutches (US 6397868)

The user can then lean back into the sling while using their feet as two more contact points with the ground. This device has the advantages of being very simple and easy to attach to any two underarm crutches. However, the user must have good enough balance to maintain their seating position themselves. An average elderly user with poor balance could not use this device safely. Another problem looks to be the difficulty for the user to get up from the seat while maintaining their balance.

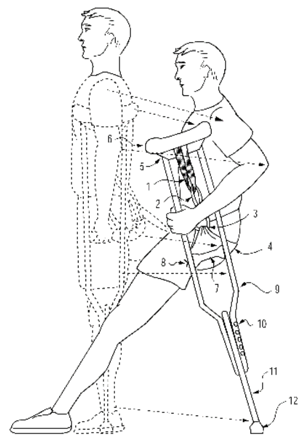

FIG. 3

Figure 25: Proper Seated Position for Sling Seat between Crutches (US 6397868)

3.0 Design Specifications

Design specifications were created so that we could measure the performance of our device in being able to function as both a cane/crutch while also having an incorporated seat. The design specifications were separated into three categories based on their level of importance; these categories are critical, important, and desirable.

3.1 List of Design Specifications

The list that follows is an inclusive list of the necessary capabilities of our device along with some specifications we would like to see in the device.

3.1.1 Functional/Performance of Device

- **Weight**
  - Device weight must not exceed 5 lbs.
    - According to our background research, the weight of current crutches on the market is between 1.5 and 3 lbs. Considering the attachment of a seat component to the crutch, we set our weight limit to 5 lbs. Cane seats on the market weigh between a range of 2-3 lbs.
- **Seat**
  - Seat must be foldable.
    - This specification ensures that the seat will not be an obstruction when user is walking.
  - The seat must be able to withstand a weight of 285 lbs. without failing.
    - Anthropometric data shows that 95% of males weight 285 lbs or less, and our device should be usable by 95% of the population.
- **Adjustability/folding**

Folding

  - Device must be foldable.
    - This specification enables the users to have easy transportation and storage of the device.

Adjustability

- The device must be adjustable from 36’’ to 52’’ in height.
    - Benchmarking research for both forearm crutches and canes reveals that this level of adjustability is necessary for the range of users.

- **Size**
    - The height of the device must not exceed 52’’
        - The floor-to-grip height for forearm crutches on the market varies between 30 and 40 inches. In addition the length of the forearm section typically varies between 7 inches and 10 inches.
    - The size of seat must be between 7-9 in diameter
        - This specification ensures that the users will not feel uncomfortable when sitting, while not being too big so as to bring inconvenience to users when walking. Moreover, a bigger seat might allow movement of the user's center of gravity outside the base of support in addition to exceeding the desired device weight.
    - The height of seat must be between 17" and 22".
        - This specification is based upon anthropometric data for popliteal heights from 5% of female users and 95% of male users, ensuring the largest range.

3.1.2 Operating Characteristics

- How user adjusts/folds the seat
    - It must not take more than 5 steps to fold/unfold the seat.
        - This ensures that the act of folding the seat is not overly complicated in addition to requiring a lesser amount of work for the user. Since our target population is generally people with Osteoarthritis, minimal effort should be required.
    - Simple adjusting technology (or equivalent) must be applied to our device
        - Simple, one-button releases are currently used on the market which allow for minimal effort and greater ease of adjustment for users.

3.1.3 Operating Requirements

- **Indoor/Outdoor**
  - Device must be useable indoors and outdoors.
    - The device is designed for those who want independence both inside their own homes and outside.
- **Weather Conditions**
  - Device can be used in outdoor weather conditions except heavy snow, freezing rain, or icy conditions.
    - This device will work fine in fair weather or even rainy conditions, but it cannot prevent falling in very slippery and dangerous conditions.

3.1.4 Safety

- **Weight limits**
  - The device must have a maximum weight limit of 285 lbs while being used for walking and sitting.
    - The 95th percentile for women aged 20 and over for weight is 240 lbs. The 95th percentile for men aged 20 and over for body weight is 285 lbs. Our devices weight limit will cover up to the 95 percentile for men.
- **Safety with use of seat**
  - The device must have a popliteal height between 22" and 28".
    - The device must have adjustable seat height so that a user's feet can reach the ground. This will give the users more balance while they are seated and make it significantly easier for user to get onto on off of the seat.
  - The device must have a base of support that lies directly under the center of the seat and encompasses the entire surface area of the seat.
    - The base of support of the device must be large enough so that the entire area of the seat lies within the base of support. This will help to keep the users center of mass inside the base of support as long as they are seated.
- **Sharp edges/pinching**

- Device must not have sharp edges that can injure user while either walking or sitting.
  - The device should not pose a safety risk to anyone using it in its normal operation. The device must also be safe for those in the vicinity of the user and device during normal operation.
- Device must not have pinch points where user can be pinched while opening or closing the device.
  - The device must not pose a pinching risk to users while it is being folded or otherwise manipulated. Pinching points are very possible in devices that fold.
- Mechanism for folding seat must not pose risk to user opening/closing seat, or while device is in use as walking aid.
  - The device should have a means of securing the folding seat when not in use. The device must not accidentally release the seat during normal walking operation as this would pose a risk to the user or others in vicinity.

3.1.5 Reliability and Maintenance

- **Maintenance**
  - Device will not need routine maintenance other than on the base caps/tips.
    - The device will need to be checked routinely for wear and tear of the caps/tips that come into contact with the ground, which will need to be replaced occasionally. Other than this, the device does not need any other routine maintenance.
  - Device must have replaceable base caps for when it becomes worn out.
    - The base cap of the device will also deteriorate during normal use, or the user might want to put on a different cap. These caps should be able to be replaced easily and with only common household hand tools.
- **Cleaning**
  - Device can be cleaned using multi-purpose cleaning spray.

        - Device might get dirty during normal outside use. If the device needs to be cleaned it can be cleaned easily with spray and towel or paper towels.
    - Seat on device must be moisture resistant.
        - The device should not retain moisture from sweat or rain (if being used outside). Retained moisture would be unsanitary for the user along with adding weight to the device.
- **Replacement parts**
    - It would be nice for the device to have a replaceable hand grip in case the user would like to change to a different style.
        - Some users may want a more ergonomic hand grip, while others may want a simpler cylindrical one. The device will not confine the user to one specific type of grip if they want a different one. This should be a simple process that will only affect the hand grip of the device.
    - Replaceable parts of device must be replaced using only common household hand tools.
        - These replaceable parts should not need tools to replace them. These parts would the most often replaced parts and so for convenience the user should only need common hand tools to replace them.

3.1.6 Human Factors

- **Comfort/user friendly**
    - Device should use soft padding on hand grip and other contact points on the body.
        - Soft padding can be important for the users that are using this device every day. It might be more comfortable for the user, and minimize irritation of repeated rubbing on skin.
    - Device must use anti-slip padding on hand grip and forearm contact points.
        - Anti-slip padding will help users keep a firm grip on the device. Considering the device is used for balance and weight bearing, the user should not have problems with the device slipping from their grip.

- **Ergonomics**

- It would be nice for the device to have an adjustable angle hand grip to minimize strain on the hand for different users.
    - Different users may want their hands at different angles while using the device. Having multiple positions for the hand grip will let users optimize their comfort and the performance of the device.
- Device must be adjustable for user heights between 4'9" and 6'2".
    - The 95th percentile for height of males aged 20 and over is 6'2" which we will take as the maximum height of any user of our device. The 5th percentile for height of females aged 20 and over is 4'9" which we will take as the minimum height of any user of our device.

3.1.7 Cost

- **Hardware cost**
    - Material hardware cost for the prototype must not exceed budget of $480
        - The Mechanical Engineering Department allots a certain amount of money to students for MQPs. It's important to not go over this budget otherwise we may have to change our designs or pay out of pocket.
- **Selling Price**
    - Selling price, taking into account labor and hardware costs, must remain below $50 in order to be competitive in the market.
        - If our product is not affordable for potential customers then it limits the number of people in our target population that will use it. Additionally, its price must be competitive and other similar devices which are between $30 and $50.

3.1.8 Manufacturability

- **Material**
    - Materials must be easy to weld, cut, form, and machine
        - The easier the materials are to manufacture, the more cost effective the device is as a whole.

3.1.9 Durability

- **Material**
  - Material must be resistant to corrosion and everyday weathering.
    - Canes and crutches are used both inside and outside in many types of weather. The device must not break down or deteriorate from exposure to the elements (such as rain or mud, etc.).

4.0 Preliminary Designs

These preliminary designs focus on combining both a cane and a crutch so as to appeal to a larger market, while also incorporating a seat for those users that need rest more frequently. Many of these designs are similar in the way that the seat folds down. However, there are some significant differences that make each design unique. Some aspects from each design may be utilized for our final design based on how useful and effective they may be.

4.1 Design 1 (Angled Leg Design)

This design consists of a detachable forearm cuff with an adjustable tripod seat (Fig. 26). Figure 27 shows the ability to detach the forearm cuff for those who would prefer to use just the cane portion of the crutch.

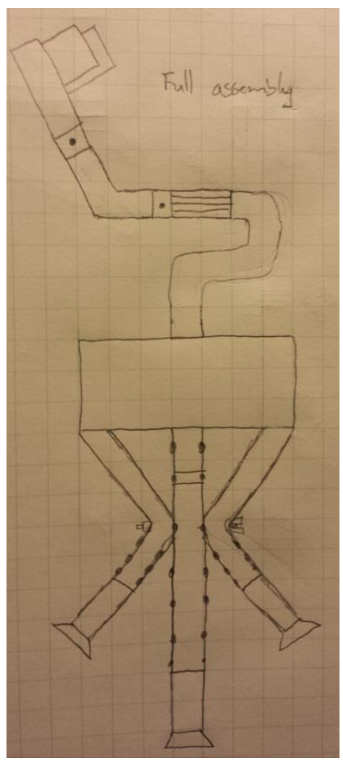

Figure 26: Design 1 Full Assembly

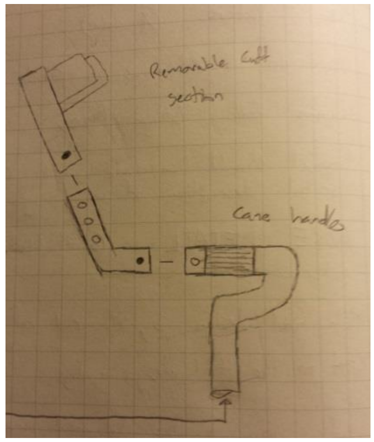

Figure 27: Detachable Cuff, Design 1

The seat is fixed to the main shaft of the cane by means of a sliding collar. The seat pivots on the collar as the collar is moved down the shaft. The other end of the seat is connected to two legs which, in turn, are connected to the main shaft (Fig. 28).

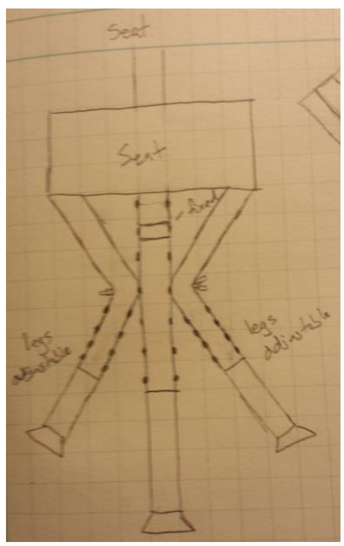

Figure 28: Front Profile, Design 1

As the collar slides down the shaft, the legs pivot backward (Figure 29). The collar slides until it hits a fixed collar, at which point the seat is parallel to the ground and the two legs have pivoted backwards to create a tripod with the main shaft of the cane. This design is similar to the Folding Lightweight Adjustable Height Cane Seat from Chapter 2.4.1. However, the legs are all adjustable in this design to cater to different user heights. Additionally, the point at which the two legs are connected to the main shaft and the fixed collar can be adjusted to increase the seat height.

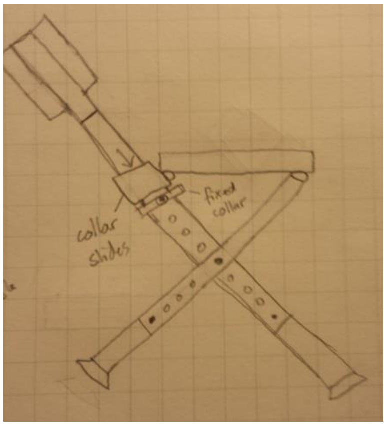

Figure 29: Side Profile with Sliding Action, Design 1

4.2 Design 2 (Umbrella Design)

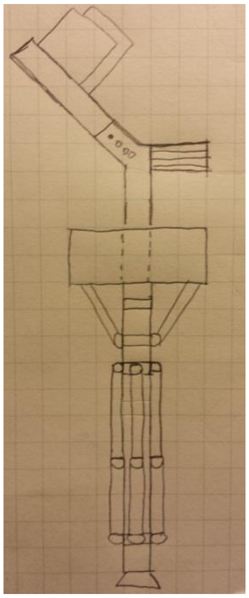

Figure 30: Design 2 Full Assembly

This design is very similar to Design 1 in that it has a removal cuff (Figure 31) and sliding seat (Figure 32). However, where it differs is the base of support, the folding mechanism of the seat, and the handle design of the cane. With the detachable cuff, as in Design 1, the user has the ability to transform the forearm crutch into a cane with ease. The handle grip is more comparable to forearm crutches on the market.

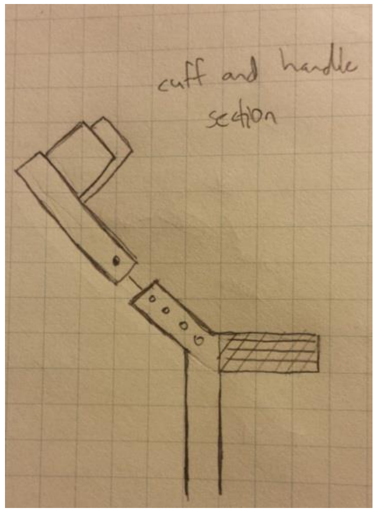

Figure 31: Handle and Cuff, Design 2

The seat is attached to the main shaft near the top with a sliding collar as seen in Figure 32. The bottom of the seat has two supports that are connected further down the shaft to a fixed collar. These supports pivot on both the seat and the fixed collar. When the sliding collar on the top is pulled down, the seat slides down and eventually becomes perpendicular to the main shaft once it hits the stop collar (which is also fixed).

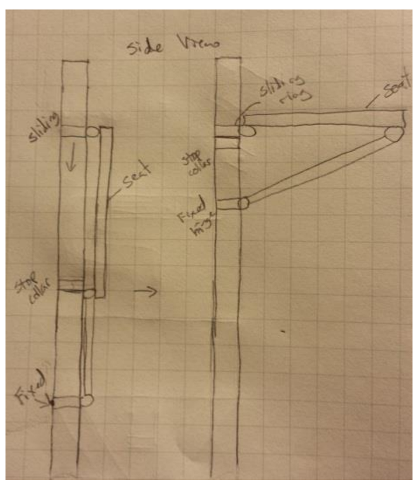

Figure 32: Seat Folding Mechanism, Design 2

There are three legs that are parallel to the main shaft (Figure 33). Each leg is attached to a sliding collar at the top and a fixed collar on the bottom. These legs have a joint approximately midway down. As the sliding collar attached to the tops of the legs moves down, the legs bend at the joint and extend down below the main shaft of the cane. As a result, they form a tripod that acts as the base of support.

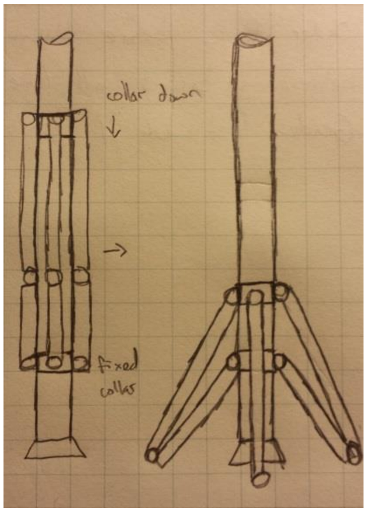

Figure 33: Base of Support, Design 2

4.3 Design 3 (Slotted Shaft Design)

Design 3 is a universal crutch which has an adjustable height range from 27 inches to 52 inches (Figure 34). For those canes we have researched, their heights vary from 30 inches to 37 inches. Choosing a universal crutch for this design makes the crutch more versatile since it can accommodate more users.

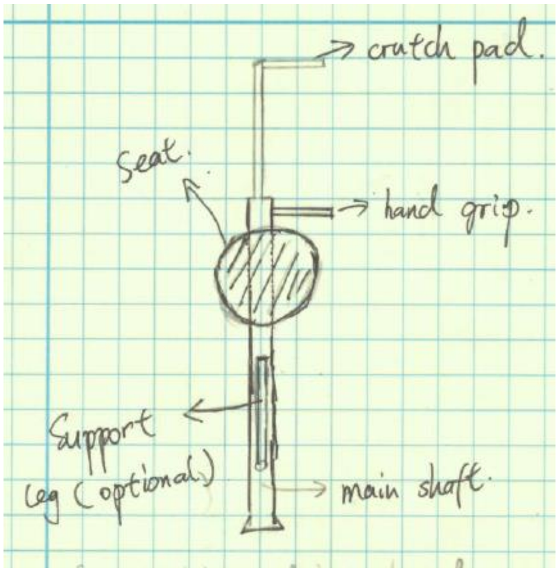

Figure 34: Design 3 Full Assembly

The seat is parallel to the shaft when folded as seen in Figure 35. This would be helpful in keeping the center of gravity as close to the shaft as possible while also saving space for storage. The seat is connected to two supports. A ring support will slide up and down along the shaft as the seat is being folded and unfolded and will be fixed at a point when the user is sitting on the seat in order to provide stability. A bar support will rotate around a pin point at the bottom of the seat. In order to save some space for the seat when it is folded, the bar will rest in a slot which is located on the main shaft.

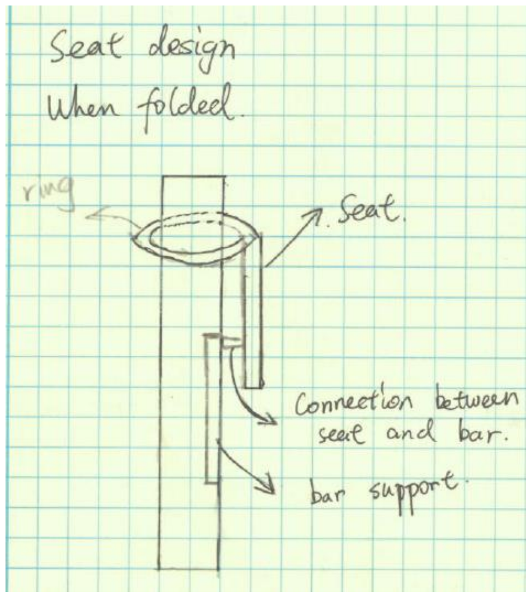

Figure 35: Folding Seat Mechanism, Design 3

Figure 36 shows how the ring will slide down to the fixed point which will make the seat parallel to the ground. In this figure, the front leg support is not shown; the base support design will be elaborated in the next section.

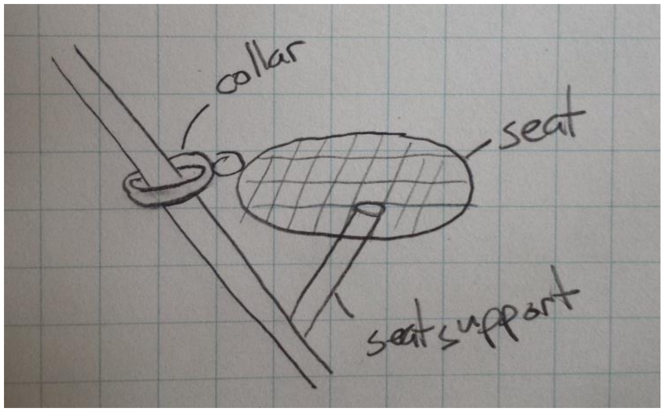

Figure 36: Unfolded Seat, Design 3

As shown in the Figure 37, all of the support legs can be folded or unfolded by rotation. When the legs are folded, they are parallel to the main shaft in order to save space. The legs pivot down from the top and are located closest to the user while the device is being used for walking. The seat folds out on the side further away from the user while walking. The legs are locked when the device is not operating as a seat. This will prevent the support legs from being an obstruction to users.

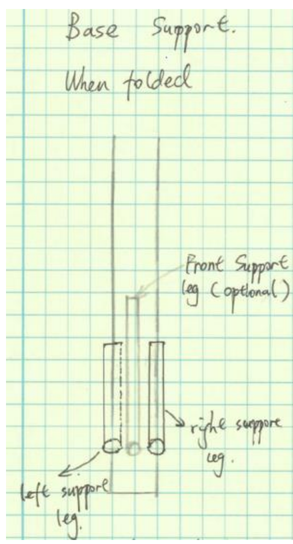

Figure 37: Folded Leg Support, Design 3

The base of support is a tri-pod design with 3 support legs, including the main shaft, with an optional front support leg (Figure 38). For this design, the base of support consists of three individual support legs instead of two legs and a main shaft base. The motivation to add another is that the extra leg would make the base of support larger. This could lead to higher stability for the user and increased safety.

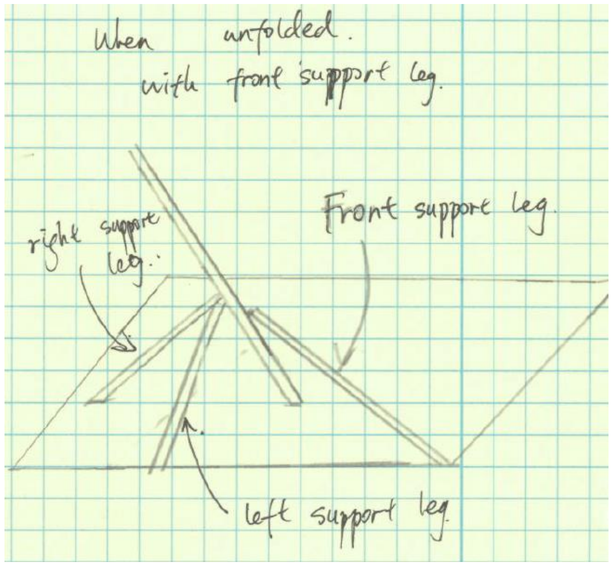

Figure 38: Unfolded Leg Support, Design 3

4.4 Design 4 (Kickstand Design)

Figure 39 shows the design of a forearm type crutch with a circular folding seat and tripod legs to provide stability and a large BOS. The device has both upper and lower telescoping members for adjusting to the users size. The seat is located on the right or left side of the main cylindrical member depending upon which side the user needs the device on.

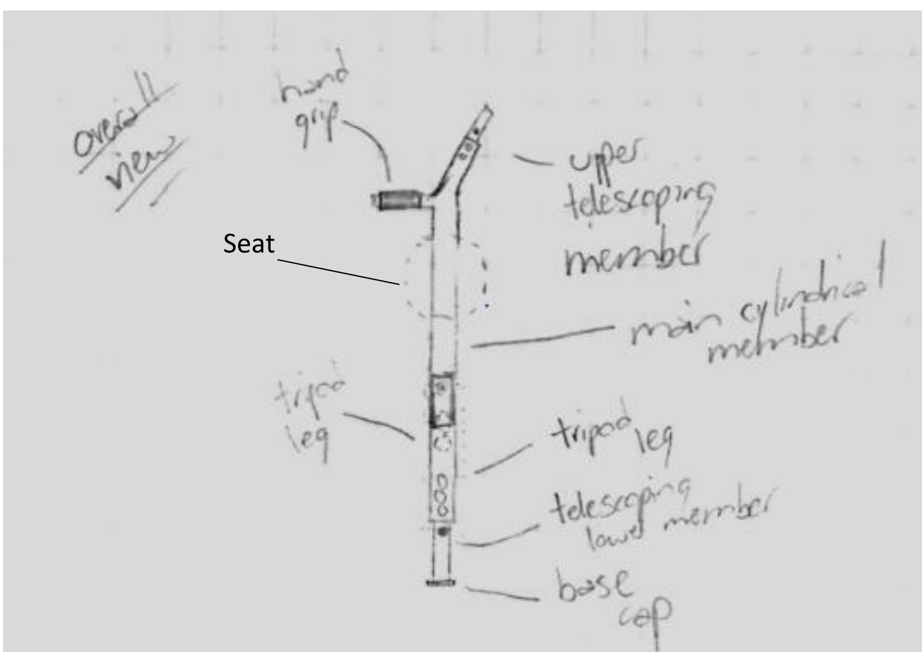

Figure 39: Overall view of Design 4

The seat folds flat against the main shaft using two bracing members (Figure 40). There is a small sleeve that fits over the joint between these members when it is in the open position. This keeps the bracing members straight, and keeps the seat top horizontal. The height of the seat can be adjusted using the telescoping lower member of the shaft and the telescoping tripod legs. The seat is attached to the main shaft by means of a small bracket.

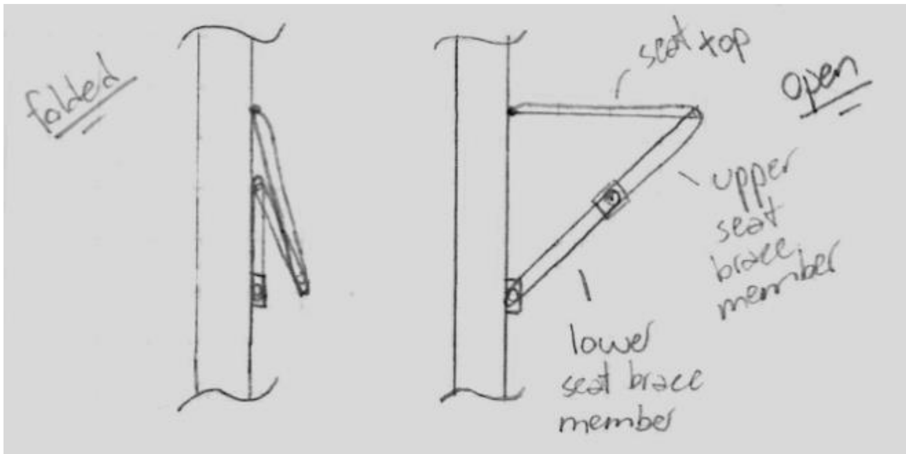

Figure 40: Folding seat mechanism for Design 4

Figure 41 shows that the tripod legs fold up against the main shaft when they are not in use for the seat. Each of these three tripod legs has a telescoping member. This allows the user to adjust the seat height to where they need it to be. This method of adjusting seat height seems easier than trying to manipulate the seat itself. Each of the tripod legs are attached at their top to a sleeve. This sleeve lies over the main cylindrical shaft and can be moved to a couple different vertical positions where it locks in place using a button. This will also help with the height adjustment of the seat.

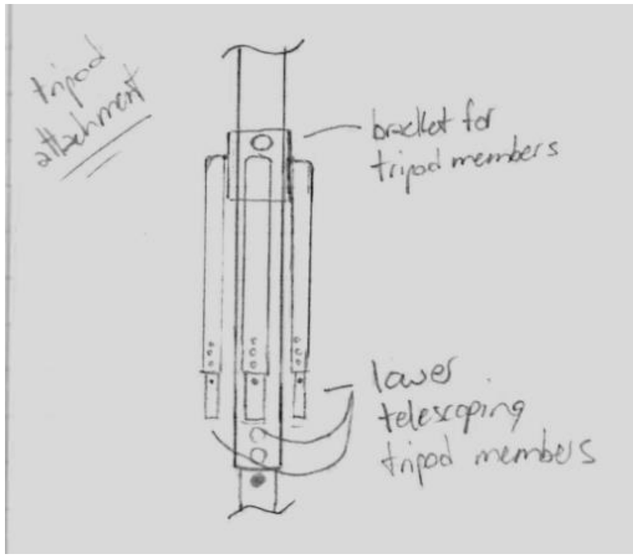

Figure 41: Tripod attachment for Design 4 in Folded Position

Figure 42 shows one of the tripod legs in its extended position. Each of the tripod legs extends in the same manner. In this figure, the clips can be seen that will hold the tripod legs tightly against the main cylindrical shaft. There are three of these small plastic clips that easily allow the tripod leg to be pushed into the clip and released from the clip. These clips keep the legs secured from moving while not being too difficult for the user to extend.

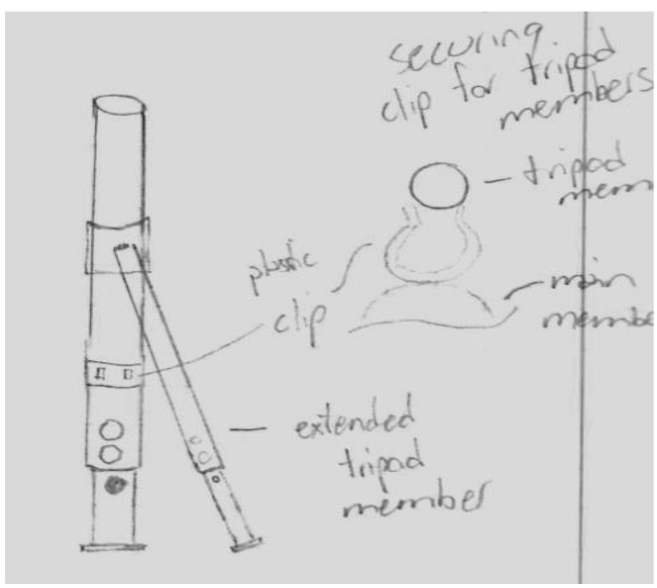

Figure 42: Extended Tripod and Securing Clip for One Leg

5.0 Preliminary Static Analysis for Designs

In order to get a better understanding as to which design would be more suitable for the final design, preliminary static analysis was conducted on the four designs.

5.1 Kickstand Design

One of the most important parameters to include in the designs is to keep the center of mass within the base of support of the device, when the seat is being used. The two possible positions for the seat in relation to the tripod legs are the seat located between two of the tripod legs or the seat is located directly over one tripod leg. If the seat is located between the two front tripod legs, then the tips of the tripod legs which are in contact with the ground must be at least 9 inches from the main shaft, the same distance away from the main shaft as the edge of the seat. If the legs were a shorter distance from the main shaft than the edge of the seat then there would be a tipping hazard.

The stability of the device while being used as a seat is crucial for our users. The two options of seat placement shown in Figures 43 and 44, relative to the tripod legs, determine how stable the seat will be. When a tripod tips it will tip about two of the legs, meaning that one leg will lose contact with the ground. The option with the seat directly over one of the tripod legs (Figure 43) would ensure that the seat would not tip directly forward as the tripod cannot tip about one leg. The device will have the greatest chance of tipping if the user begins to lean to either the left or the right.

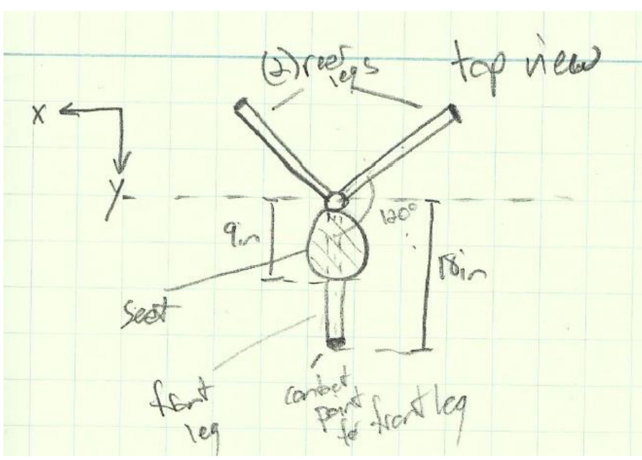

Figure 43: Device with seat located directly above one front leg

The alternative seat position, in Figure 44, would be the seat located between two of the tripod legs. This configuration will make tipping to the left or the right significantly more difficult, because the center of mass would have to move left and slightly backwards or right and slightly backwards. The main shaft being against the users back would make it difficult for them to move their center of mass backwards by too much. In order for the seat to stay within the base of support the two front legs must have contact points at least 9in from the main shaft.

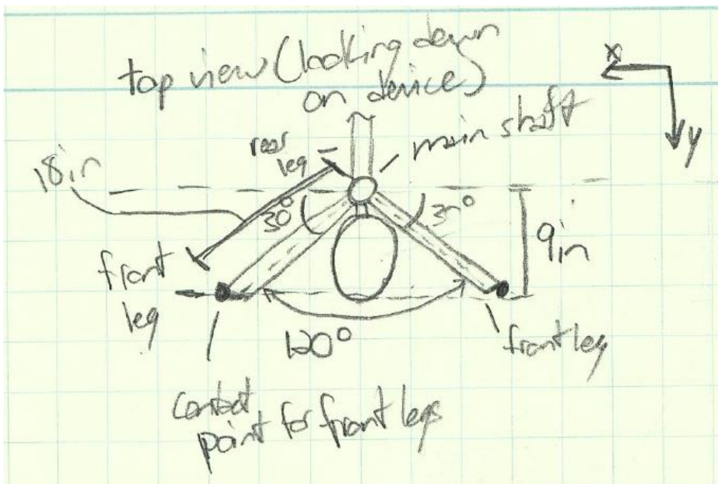

Figure 44: Device with the seat located between two front legs

5.1.1 Problems with Kickstand Design

The primary issue with this design is the footprint of the device when it is being used as a seat (Fig. 45). Due to the fact that the seat, and therefore center of mass of user, is not located down the center of the main shaft the footprint must increase in size to prevent tipping. The most important dimension is the point of contact of the front to legs being 9 inches away from the main shaft. If this dimension is less than 9 inches, the chance of tipping is much greater. The support legs must be at a fixed angle from the main shaft, and so the necessity to have contact points at least 9in from the main shaft increases the distance between the front two support legs. The distance between the front two legs is 31.2 inches and the distance between the front legs and the rear leg is 27 inches. This causes the device to take up a large amount of space when being used as a seat. If the user only has a small area to deploy the seat in, then they would not be able to use the seat at all.

The tripod legs must also be telescoped once they are folded up to the main shaft to allow the main shaft to make contact with the ground for walking. This is also inconvenient for the user as it is an extra step in the folding process and would make the user bend over to adjust the tripod legs to the correct height.

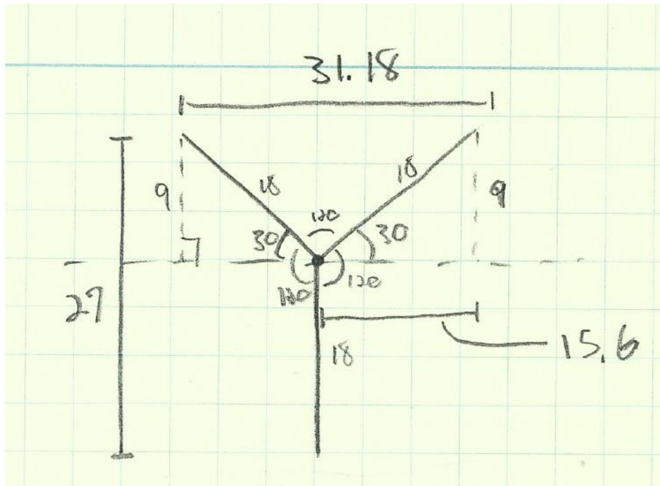

Figure 45: Dimensions of Device with Support Legs Deployed for Maximum Seat Height

5.2 Slotted Shaft Design

The slotted shaft design lacked any initial dimensional problems associated with the design. Therefore the preliminary static analysis on the design was conducted in order to understand the forces on some of the important structural members. The free body diagram for the slotted shaft design is shown in Figure 46. At this preliminary analysis step the evaluation of the design is in 2D as the 3D analysis is extensive and the 2D analysis is sufficient for determining some of the forces in a preliminary design.

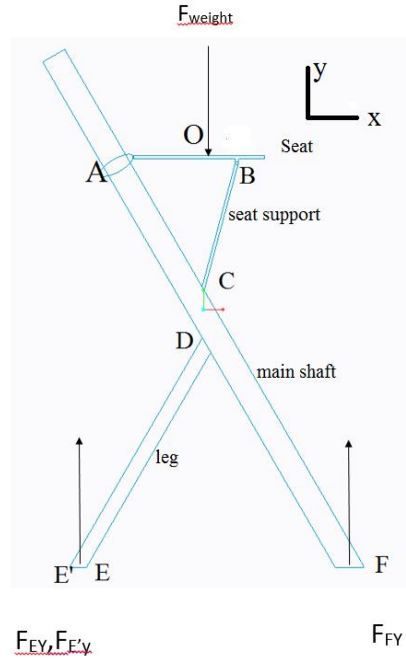

Figure 46: Free-Body Diagram of the Device

In order to conduct a static analysis for this design a number of assumptions were made about the system. The assumptions are listed below:

1. The moment was calculated about point A.
2. Since the design specifications for the limit of the weight for the user is 285 lbs (which is 1267 N), the mass of the device itself is ignored when calculating.
3. The point E and E' simply suggesting that there are two points touch ground as there are two support legs. In figure 48, the E' has been covered by point E from this view.
4. L_{EAx} ,$L_{E'Ax}$ and L_{Fax} are the distance from point A to point E,E' and F in x direction.

In order to calculate the forces on each of the legs that make up the tripod base of support MathCAD was used. The following dimensions are the dimensions that were calculated through simple geometry from the lengths of known members. Some lengths of the members were determined from the necessity of the device to reach at least 30" in height from hand grip to floor, and then the other dimensions were based upon the necessary dimensions.

$$dia_{seat} := 9in = 0.229\,m$$

$$l_{AB} := 7in = 0.178\,m$$

$$l_{AO} := 4.5in = 0.114\,m$$

$$l_{EF} := 17in = 0.432\,m$$

$$l_{EAx} := 0.84in = 0.021\,m$$

$$l_{FAx} := 16.16in = 0.41\,m$$

The equations used in order to determine the reaction forces on each of the support members are shown below. Using a combination of the overall force in the Y direction along with the moment force about point A the forces were calculated. Although this is not an extensive static analysis, it gives a good approximation of the forces that would be present in this design.

$$\Sigma F_y = 0 = F_{Fy} + F_{Ey} + F_{E'y} - F_{Weight} \quad (1)$$

$$\Sigma M_A = 0 = F_{Weight} \cdot l_{AO} + F_{Ey} \cdot l_{EAx} + F_{E'y} \cdot l_{E'Ax} - F_{Fy} \cdot l_{FAx} \quad (2)$$

The following results are the reaction forces on the main support member and the two other support members. The forces in the two support legs are identical because in this case the weight of the user is in the exact center of the seat.

$$F_{Fy} = 398.448N$$

$$F_{Ey} = F_{E'y} = 434.276$$

The next step was to determine some of the forces that would be acting on the seat from the supporting members. Figure 47 shows the free body diagram of the seat.

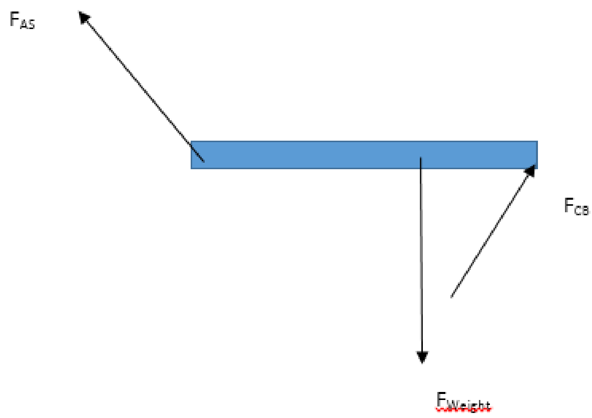

Figure 47: Free-Body Diagram for the Seat

The following assumptions were made for the free body diagram of the seat. Again only the forces in 2D were calculated for the preliminary analysis, which explains the sum of the forces in the y and z directions being zero.

$$F_{weight} = 1267 \text{ N}$$

$$\Sigma F_y = 0$$

$$\Sigma F_x = 0$$

In order to determine the forces acting on the seat from the connecting members the following equations were used.

$$F_{CB} \cdot \cos(757) - F_{AS} \cdot \cos(606) = 0 \quad (3)$$

$$F_{weight} := F_{CB} \cdot \sin(75Q) + F_{AS} \cdot \sin(60F) \quad (4)$$

The results of these calculations are in the following equations. Again these are forces in a 2D plane and so are only approximations. In reality the force from the two seat support members, F_{CB}, is split between the two members and these members have additional force components in 3D.

$$F_{CB} := 902.2N$$
$$F_{AS} := 466.969N$$

During the evaluation and analysis of the designs a couple of modifications to the designs were made that improved the functionality of the design. Figure 48 shows the updated support leg folding mechanism. Although the overall design was practical, it needed a locking mechanism to ensure that the leg would be safely secured in both the deployed and folded position. Therefore a small spring-loaded locking mechanism was added to the bracket.

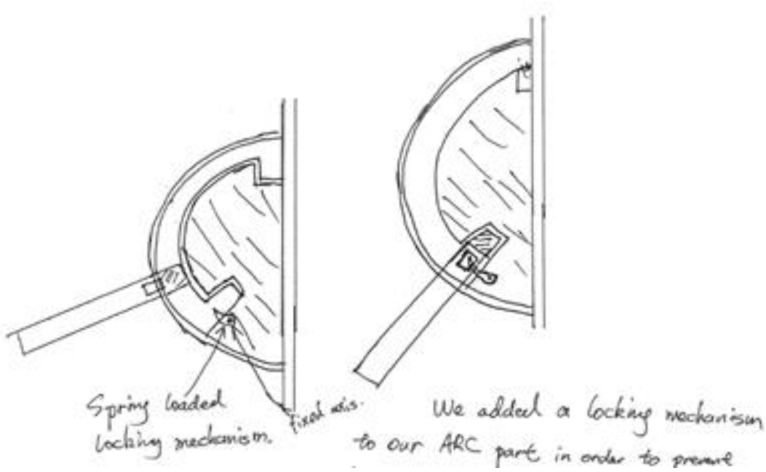

Figure 48: Modified Support Leg Folding Mechanism

As the support leg is pushed into the slot the locking mechanism is rotated clockwise with the torque of the spring trying to rotate the locking mechanism counterclockwise. Once the leg is fully inserted into the shaft, there is a small opening that the locking mechanism snaps back into. The leg is then locked into position through the spring-loaded locking mechanism. Since the locking mechanism is not supporting any weight its only function is used to secure the device in the two possible positions.

In addition to adding a locking mechanism to secure the support legs another locking mechanism was added to secure the seat in place during certain scenarios users may encounter on the seat. During certain loading scenarios the weight of the user may be concentrated at the very front of the seat. In this scenario the collar attached the rear of the seat would begin to slide up the main shaft, further tilting the seat forward. In order to solve this issue a small lock that acts was added similar to the lock keeping an umbrella opened. Figure 49 shows the locking mechanism (A) that allows the collar to slide down over the lock when deploying the seat and keeps the collar from sliding back up.

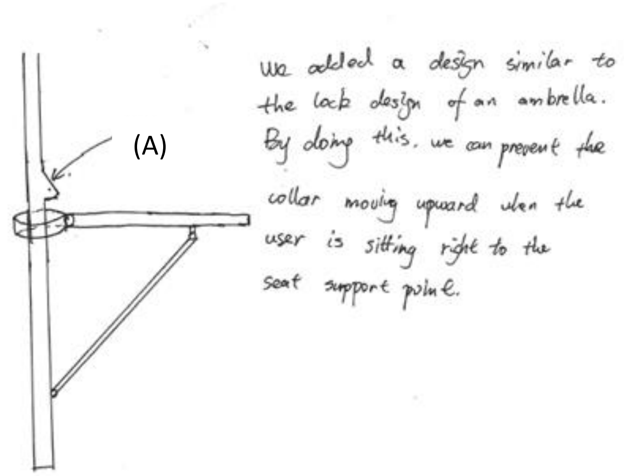

Figure 49: Locking Mechanism for Seat Collar

5.3 Angled Leg Design

The Angled Leg Design is similar to the Slotted Shaft design in that the main shaft acts a leg when in the seated position. This also allows for the center of mass to be more centrally located on the device. Figure 50 shows the static analysis of the device when a 285lb load is acting on the center of the seat. Locations D' and D in figure 50 show are the contact points of both the leg that can be seen in 2D and the leg that is located in 3D behind this leg. Lengths DAx, D'Ax, and AEx are the distances between those respective points along the x-axis.

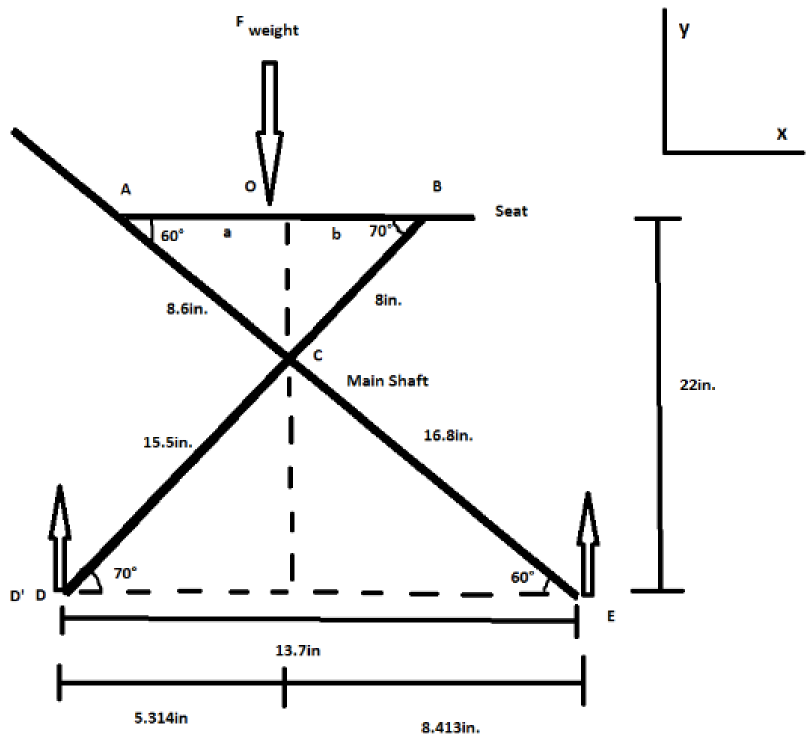

Figure 50: Free-Body Diagram for the System

The dimensions for this design are dependent upon the angle between the support legs and the ground and the main shaft and ground.

$$dia_{seat} = 9in = 0.229m$$

$$l_{AB} = 7in = 0.178m$$

$$l_{AO} = 4.5\ in = 0.114m$$

$$l_{DE} = 13.7in = 0.348m$$

$$l_{DO} = 5.314in = \ .135m$$

$$l_{DAx} = l_{DO} - l_{AO} = 0.021m$$

$$l_{AEx} = l_{DE} - l_{DAx} = 0.327m$$

The following equations were used in order to determine the force acting on the support leg and main shaft while the device is being used as a seat.

$$\sum F_y = 0 = F_{Dy} + F_{D'y} + F_{Ey} - F_{weight} \quad (5)$$

$$\sum M_A = 0 = F_{weight} * l_{AO} + F_{Dy} * l_{DAx} + F_{D'y} * l_{DAx} - F_{Ey} * l_{AEx} \quad (6)$$

The results of these calculations are shown below. It should be noted that the two support legs are holding more of the user weight than the main shaft.

$$F_{Ey} = 491.5N = 110lbs$$

$$F_{Dy} = F_{D'y} = 387.75N = 87.1lbs.$$

5.4 Umbrella Design

The Umbrella Design is very similar to the Kickstand Design in that the main shaft is perpendicular with the floor when in the seating position and therefore the base of support needs to be larger to counteract tipping forces. In fact, the layout of the tripod legs is identical to the Kickstand Design: the seat lies between two of the legs which are 120° apart from each other. Where the Umbrella design differs is in the design of the legs and seat.

Figure 51 shows the basic layout of the seat with forces applied to it. The 1267 N (285 lbs) is applied directly in the middle of the seat, at 4.5 inches (0.057m). F_B is the force along member AB and since the sum of the moments about point A equates to 0, F_B can be determined (1,224N = 275lbs.). In addition, the sum of the forces in the +Y direction equals 0. Now that F_B has been found, F_{Ay} can be calculated (630.9N = 141.8 lbs).

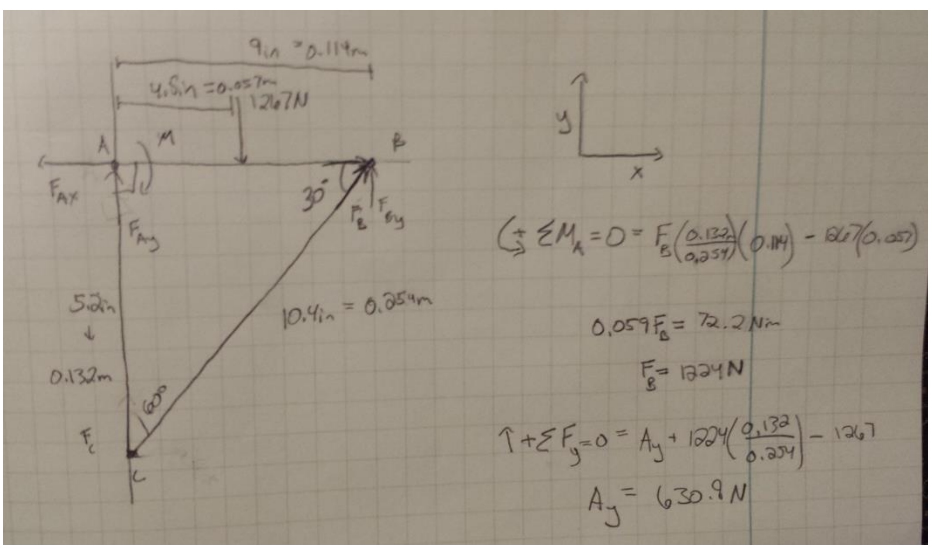

Figure 51: Seat Layout and Static Analysis

Figure 52 shows the legs of the Umbrella Design in both the crutch layout and the seat layout. When in the crutch layout, the members AB and BC are vertical and parallel with the main shaft. When functioning as a base of support for the seat, the cuff at point A slides down the shaft and until point B falls below the bottom of the main shaft and serves as a leg.

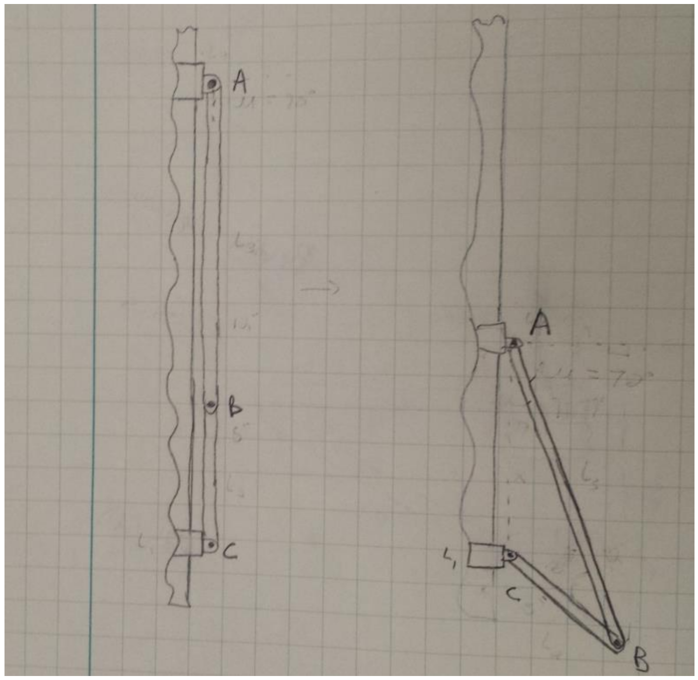

Figure 52: Umbrella Design Leg in Folded and Unfolded Position

This design proves problematic because, as shown in Figure 53, the distance of the leg to the main shaft must be 18 inches in order to accommodate a seat of 9 inches and not tip. Figure 53 shows how long members AB and BC would have to be if the extension below the base of the main shaft was 2 inches and the distance of AC was 6 inches. Using the Pythagorean Theorem, the member BC and AB were determined to be 18.11 inches and 19.6 inches long, respectively. The length AC, when the device is in the crutch position, would therefore be over 37 inches long. This far exceeds the design specification for the length from the ground to the seat, which was between 22 and 28 inches. Therefore this design is not feasible for our device.

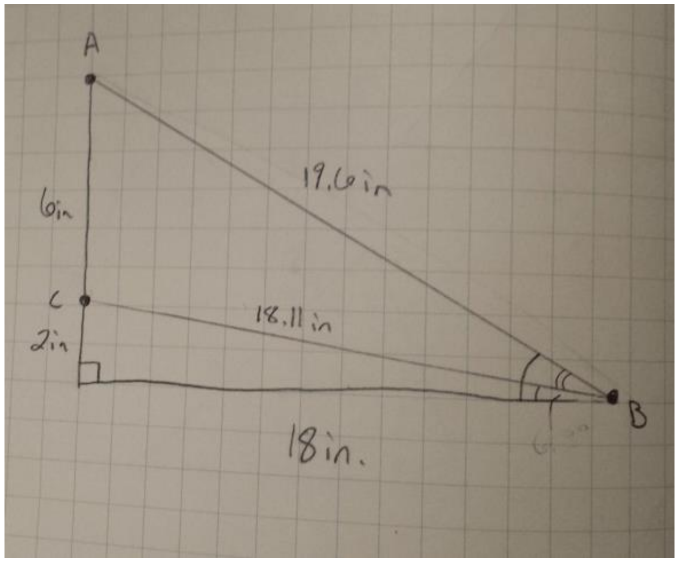

Figure 53: Lengths of Critical Leg Lengths AB and CB

6.0 0th Order prototype

In order to better visualize our preliminary designs we created 0th order prototypes from K'NEX. These models helped us to understand where some problems might occur in certain designs.

6.1 Kickstand

Figures 54 and 55 show the kickstand design in a folded and unfolded position. In reality this design would have equally spaced tripod legs which was difficult to accurately model with K'NEX.

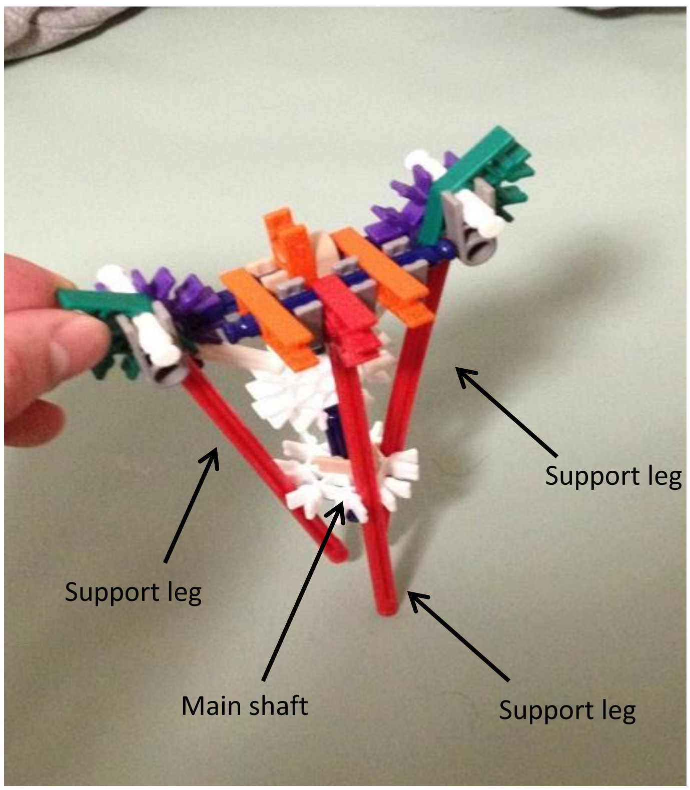

Figure 54: Kickstand Design Folded

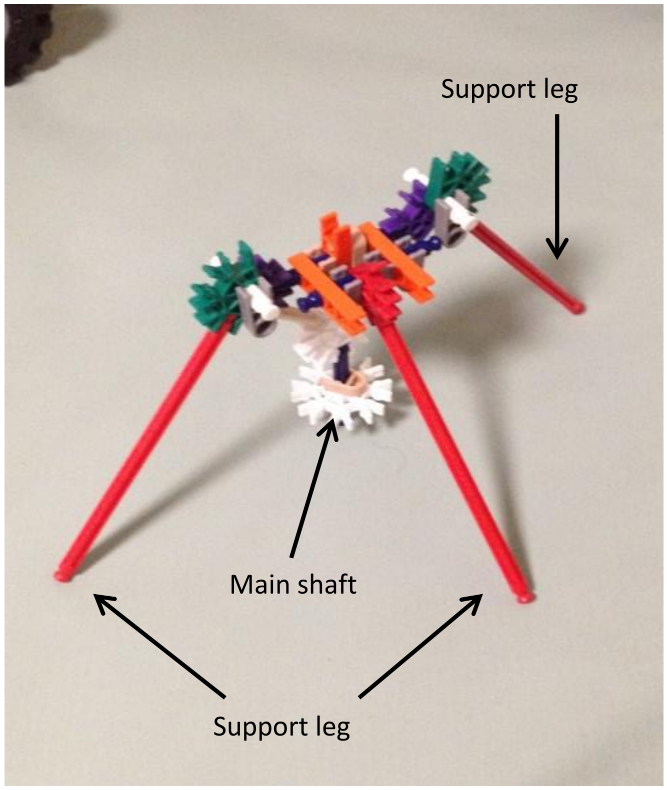

Figure 55: Kickstand Unfolded

A problem that was found through these 0th order prototypes was the use of the main shaft of the crutch/cane as a supporting member in the base. This causes problems if the ground that the device is being used on as a seat is uneven because then not all supporting legs would make contact with the ground. If the main shaft is in contact with the ground the tripod base of support could be smaller because one of the support legs will not be in contact with the ground. Instead of the three support legs forming a large base of support it would be two support legs and the main shaft forming a smaller base of support.

Figure 56 shows the static kickstand model and gives a better representation of the actual base of support of the design. This model shows the angle of the support legs to the main shaft along with the accurate representation of the seat placement on the side of the main shaft.

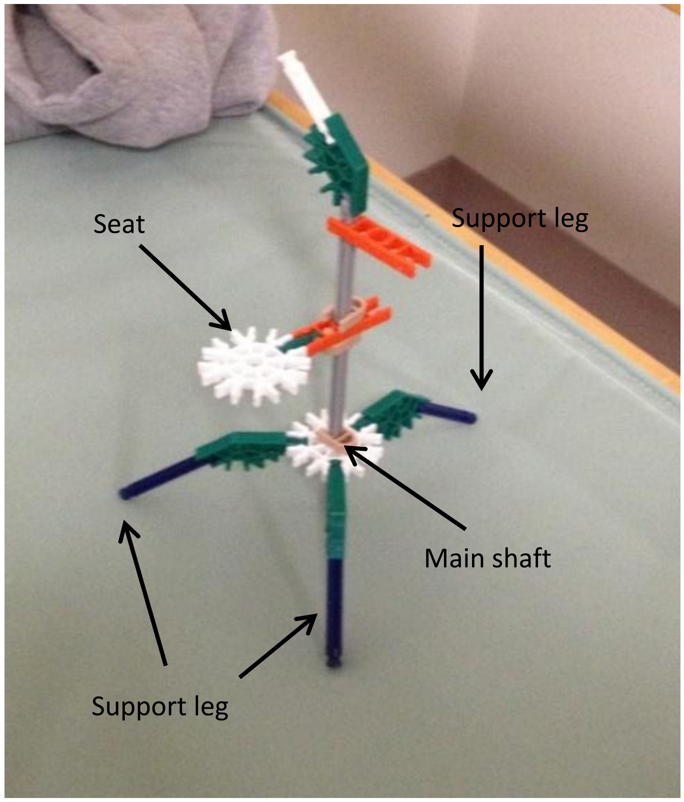

Figure 56: Static Kickstand Model

6.2 Umbrella

Figure 57 shows the leg support in the folded position. The gray piece represents the main shaft. The prototypes of the umbrella design made us realize that the seat takes up a lot of room along the main shaft in the folded position. We were restricted in the size of the K'NEX pieces but in the folded position the leg extends a great distance parallel to the shaft which would interfere with the seat. This was our first indication that this design would most likely not fit our needs.

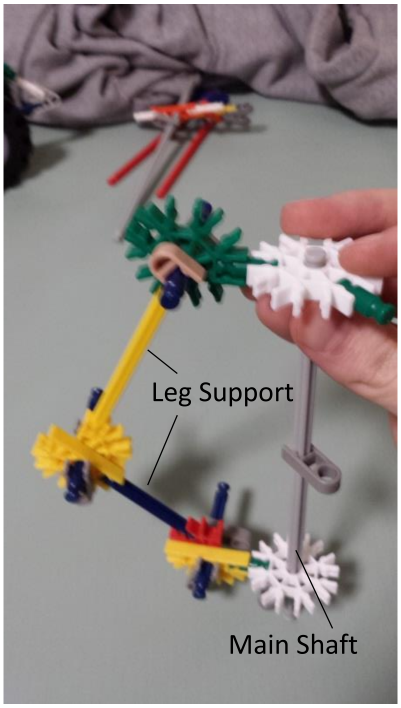

Figure 57: Umbrella Design Leg Support in Cane/Crutch Position

Figure 58 shows the leg support in the unfolded and deployed position. This model shows how bulky this design would be for the folding/unfolding of the support legs. There are more joints and pivot points in this design that would complicate manufacturing and would most likely make it less reliable.

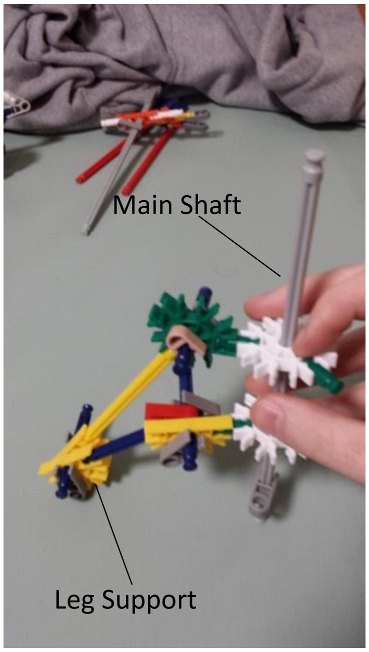

Figure 58: Umbrella Design Leg Support in Seat Position

6.3 Angled Leg Design

Figure 59 shows the design in the folded position. This prototype wasn't incredibly detailed in its depiction of the actual design. In reality the seat and legs would fold up to be much closer to the main shaft. However, it did give us an idea as to how it would move and fold. Since the legs couldn't be pinned to the main shaft, it wasn't able to accurately represent how those coupled parts operated.

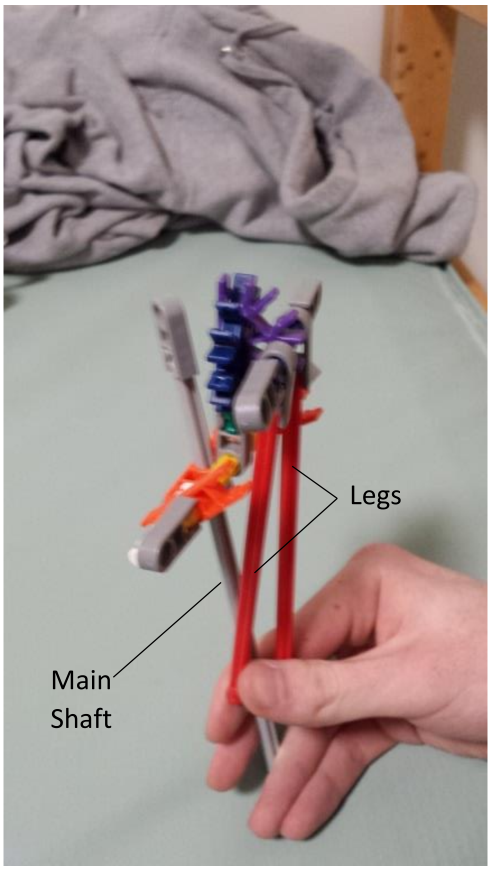

Figure 59: Angled Leg Design in Cane/Crutch Position

Figure 60 shows the seat and support legs in the deployed position. The K'NEX model does not accurately show the coupling of the seat and the legs. When the seat is unfolded the legs also unfold to their deployed position. In addition the base of support is not as small as this model shows. The two support legs that unfold would be angled outward in order to create a larger base of support.

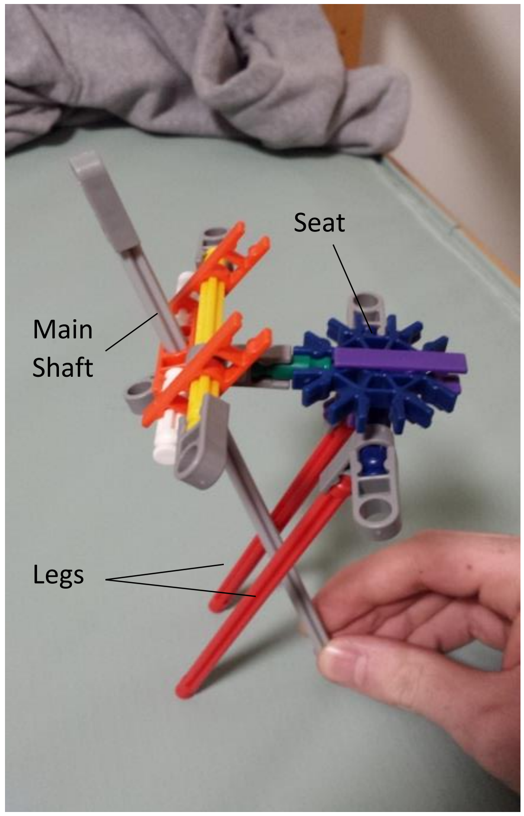

Figure 60: Angled Leg Design in Seat Position

7.0 Pairwise Comparison

In order to determine the importance of each design specification relative to the others, a pairwise comparison chart was created (Table 2). The specifications in the first column are compared to specifications in the first row. If a cell has a 1, it signifies that the design specification in that row is more important than the design specification in that column. If a cell has a 0.5, it signifies that the two design specifications are equally as important. If a cell has a 0 in it, then the design specification in that column is more important than the design specification in that row.

From the pairwise comparison chart, it was determined that the most important design specifications were stability, ease of folding, weight, and portability. Stability is important because it is directly related to safety since it prevents the user from tipping over while seated. Ease of folding is an important factor because the user shouldn't have to exert too much time and effort folding the device into a seat, especially since the user utilizes the device because they don't have complete mobility and balance. The weight of the device is important because it's a crutch/cane and must be carried. Therefore the lighter the device is, the more user-friendly it is. In addition, many elderly people have limited strength, therefore weight as a functional limitation. Portability is important because canes and crutches are taken almost everywhere; therefore if it's not portable than it's a hindrance to the user. These were the top four design specifications that received the highest score in the pairwise comparison; for the complete list, see Table 2.

Table 2: Pairwise Comparison Table

Pairwise Comparison of Design Specifications										
	Weight	Load Limit	Environment	Portability	Adjustability	Stability	Ease of Folding	Cost	Reliability/Maintenance	Total
Weight	-	1	1	1	1	0	0	1	1	6
Load Limit	0	-	1	0	0	0	0	1	0.5	2.5
Environment	0	0	-	0	0	0	0	0	0	0
Portability	0	1	1	-	1	0	0	1	1	5
Adjustability	0	1	1	0	-	0	0	1	1	4
Stability	1	1	1	1	1	-	1	1	1	8
Ease of Folding	1	1	1	1	1	0	-	1	1	7
Cost	0	0	1	0	0	0	0	-	0	1
Reliability/Maintenance	0	0.5	1	0	0	0	0	1	-	2.5

Once the design specifications were compared using the pairwise comparison chart, they were assigned a weight from 1 to 22 so that the total would be 100 (Table 3). This enabled us to differentiate the importance of the design specifications as a whole, compared to each other.

Table 3: Weighting of Design Specifications

Pairwise Comparison Results and Final Weighting		
Design Specification	Pairwise Comparison	Weight
Stability	8	22
Ease of Folding	7	19
Weight	6	17
Portability	5	14
Adjustability	4	11
Load Limit	2.5	7
Reliability/Maintenance	2.5	7
Cost	1	3

The most important design specification, stability, was given a weight of 22 and the other designs were assigned numbers to correspond with their importance based on the cap of 22.

7.1 Rubrics

Each design was evaluated against each specification and given a score between 1 and 5; 5 being the best and 1 being the worst.

Stability

Stability is the most important specification for our design. The major selling point of the crutch is to allow users the ability to sit down when they're tired. Therefore, being stable is extremely important in order to keep the user safe. The best way to keep our device stable is to have a large base of support that prevents the likelihood of the user to tip it. A score of 1 was given if the device did not have a base of support to encompass the seat and increased as the base of support became large enough to encompass the seat.

Ease of Folding

Ease of folding is essential in that it makes the process of folding and unfolding the device more user-friendly so that they do not have to exert as much effort. Decreasing the number of steps needed to fold and unfold the device limits the amount of effort needed on the part of the user. A score of 1 was given to the design if it required more than 5 steps and increased as the number of steps was reduced. A score of 5 was given to the designs which only included 1 step in folding/unfolding.

Weight

The weight of the device is important because some people, specifically the elderly, have trouble lifting heavier weights. One of the main functional limitations of cane/crutch users is that they have trouble lifting more than 10 lbs. (Kaye, et al. 2000). Since the designs are similar in the amount of material they are composed of, they generally had the same ranking. A score of 1 was given to designs that would weigh 10 lbs. or more due to having more components and would increase up to 5 when they reached 3 lbs., which is where many cane/seat products on the market currently lie.

Portability

Portability is important because cane/crutches are taken almost everywhere and therefore can't be too bulky. Decreasing the overall footprint of the device in its crutch form increases its portability. A score of 1 was given to the device if its depth was greater than 4in. and width was greater than 25in. A score of 5 was given for the designs if their depth was less than 2in. and their width was less than 8 in. The lengths of all of our devices are all the same in the cane/crutch position therefore this dimension wasn't included in the ranking.

Adjustability

Adjustability is important because it allows the device to cater to people of different sizes. Whether it's increasing the height of the crutch in general or increasing the seat height, adjustability is important so that the user-base is broader. Since most of the designs will be able to attain our seat height and overall height, this category is primarily focused on the ease at which it can be adjusted. A score of 1 was given to devices that couldn't be adjusted while a score of 5 was given to those that could be adjusted in 2 steps.

Reliability/Maintenance

Reliability/Maintenance is important because it determines how much work needs to be performed in order to keep the device in working order. The number of joints in the device determined how easy it would be to maintain the device. A score of 1 was given to devices that had 10 or more joints and a score of 5 was given to devices with 4 or fewer joints.

Cost

Standard canes with seats are for the most part inexpensive. The prices were increased with the lowest score (1) at $80 and the highest score (5) rating design at $50.

8.0 Decision Matrices

An initial decision matrix including our preliminary designs appears as Table 4. A revised decision matrix was later developed to add a hybrid design. The weights of each design specification are listed beneath the specification and the scores of each design are located in their respective rows.

8.1 Initial Decision Matrix

Table 4: Initial Design Matrix

Design	Stability/Safety	Ease of Folding	Weight	Portability	Adjustability	Reliability/Maintenance	Cost
	22	19	17	14	11	7	3
Kickstand	3	2	3	4	2	1	4
Umbrella	3	3	2	4	1	1	3
Slotted Shaft	4	3	4	4	4	4	4
Angled Leg	4	5	4	2	4	5	5
Kickstand	66	38	51	56	22	7	12
Umbrella	66	57	34	56	11	7	9
Slotted Shaft	88	57	68	56	44	28	12
Angled Leg	88	95	68	28	44	35	15
Design	Total						
Kickstand	252						
Umbrella	240						
Slotted Shaft	353						
Angled Leg	373						

8.1.1 Kickstand Design

The kickstand design scores a 3 in stability because the seat does not lie directly over the base of support. The main shaft stays vertical while the seat is deployed, meaning that the seat cannot lie directly in the center of the base of support. This makes the lengths of the tripod legs increase dramatically to increase BOS. This design scores a 2 in ease of folding due to a large number of steps to fold the device from the seated to walking position. The seat and each of the tripod legs must be folded up separately which is 4 steps. The lengths of the legs would then require each leg to be telescoped to a smaller length to allow the main shaft to contact the ground while being used as a cane/crutch. In the weight category the kickstand design scored a 3. This design will not have a significant weight difference from the other designs but has an additional leg. There are three tripod legs along with the main shaft, but as the material is aluminum tubing this should not increase weight drastically. This device scores a 4 for portability because the tripod legs fold close to the main shaft, and the seat will take up same space on all the designs. The kickstand design received a 2 for adjustability because it requires the extra step of telescoping the legs after folding them up in order to use properly. This extra step is not ideal for our users. This design was given a 1 for reliability and maintenance as it has 4 mechanisms to move the seat and three legs and there are more than 10 joints in the device. The kickstand design also scored a 4 in cost because with the extra leg, the cost will go up; however, not significantly.

8.1.2 Umbrella Design

The umbrella design receives a 3 in stability for the same reason as the kickstand design. The seat cannot lie directly in the center of the base of support and therefore needs longer leg lengths to increase BOS. In the ease of folding category, the umbrella design gets a 3. This device requires one step to fold the seat and one more step to fold the legs up using a sliding collar. The umbrella design scores a 2 in weight because each of the folding legs is using an additional link for the mechanism. This would cause the device to be slightly heavier. This design received a 4 for portability because the tripod legs will fold up right against the main shaft. The umbrella design receives a 1 for adjustability because when folded into the upright position, the tripod legs would be too long for the shaft. The umbrella design receives a 1 in reliability and maintenance because it has more moving parts in the leg mechanisms than the other designs and 10+ joints so it could have more reliability issues. This design scored a 3 in cost because of all the extra linkages in the legs.

8.1.3 Slotted Shaft Design

The slotted design receives a 4 in the stability category. This design places the seat very close to the center of the BOS allowing more room for user to shift safely. However, the legs fold down from the vertical position which poses a safety hazard for people unfolding the legs. Ease of folding for this design is a 3 because the only steps required would be folding the seat and folding each of the two support legs. The slotted design scores a 4 in weight as there are only two supporting legs and the seat added on to the main shaft. The portability for this design is a 4 as the supporting legs fold up completely parallel to the main shaft. This design receives a 4 in adjustability because the legs do not require additional telescoping after they are folded up into position. The slotted design scores a 4 in reliability/maintenance because there are only two supporting leg mechanisms and one folding seat mechanism. The slotted shaft design scored a 4 in cost because the main shaft is one of the three legs of the tripod.

8.1.4 Angled Leg Design

The angled shaft design receives a 4 in stability because the seat lies almost directly over the center of BOS. However, the base of support was rather small and therefore less safe. The ease of folding for this design is a 5. The supporting legs and the seat are linked in a way that opening the seat also extends the legs making it one step folding and unfolding. This device scores a 4 in weight as there are two supporting legs and the seat attached to the main shaft. The portability for this design is a 2 because the supporting legs do not fold up parallel to the main shaft. This could make it awkward the user to store it in a tight space or use in tight quarters. This design scores a 4 in adjustability because once the supporting legs have been folded into the walking position they do not need to be telescoped. This design scored a 5 in reliability/maintenance because it has a one-step folding and unfolding procedure and has fewer joints. The design scored a 5 in cost because the seat and legs were coupled, therefore not requiring additional brackets for the support legs.

8.1.5 Results

The angled shaft design received the highest score from the design rankings. The ease of folding of this design is what placed it over the slotted shaft design. Although it is could be slightly awkward to use/store in tight spaces, it scores high in many of the important categories. The slotted shaft design scored a close second. It scores high in stability and ease of folding which pushes the slotted shaft design far ahead of the kickstand and umbrella designs. It falls behind the angled shaft design in ease of folding and reliability/maintenance. The kickstand design comes in third due to its lower stability ranking and its poor score in ease of folding. Receiving low scores in the two highest weighted categories means that this design scored significantly less than the slotted shaft or angled leg design. The umbrella design comes in last place due to low ranking in stability, ease of folding, and adjustability. The stability and ease of folding are low for the same reasons as the kickstand design and the adjustability ranking is very low. The lengths required for the legs to provide an adequate BOS would mean that they would not fit on the length of the shaft when folded up.

8.1.6 Hybrid Design

This design combines the folding mechanism of the slotted shaft design (Fig. 62) with the same folding pattern as the kickstand design. Instead of the legs folding upwards against the shaft as in the slotted shaft design, the legs will fold down against the shaft like in the kickstand design. Figure 61 shows how the legs will fold against the main shaft when the supporting legs are not deployed.

Figure 61: 3D model of Hybrid model with legs folded against main shaft

Figure 62: 3D model of bracket

8.2 Revised Decision Matrix

Table 5: Final Decision Matrix Including Hybrid Design:

Design	Stability/Safety	Ease of Folding	Weight	Portability	Adjustability	Reliability/Maintenance	Cost
	22	19	17	14	11	7	3
Kickstand	3	2	3	4	2	1	4
Umbrella	3	3	2	4	1	1	3
Slotted Shaft	4	3	4	4	4	4	4
Angled Leg	4	5	4	2	4	5	5
Hybrid 1	5	3	4	4	4	4	4
Kickstand	66	38	51	56	22	7	12
Umbrella	66	57	34	56	11	7	9
Slotted Shaft	88	57	68	56	44	28	12
Angled Leg	88	95	68	28	44	35	15
Hybrid 1	110	57	68	56	44	28	12
Design	Total						
Kickstand	252						
Umbrella	240						
Slotted Shaft	353						
Angled Leg	373						
Hybrid 1	375						

8.2.1 Hybrid Design

The hybrid design scores a 5 in stability as the base of support encompasses the entire seat. The ease of folding gets a 3 because it takes 3 steps to fold the device up completely. The design receives a 4 for weight because it only has two supporting legs and the seat attached to the main shaft. Portability is a 4 for this design because the legs fold up parallel to the shaft and do not stick out. The hybrid receives a 4 for adjustability because it only takes 3 steps to adjust the height of the seat. The reliability for this design is a 4 because it has relatively few links and joints. The cost was ranked at 4 because the main shaft is one of the legs of support in the seated position. The hybrid design scored higher than the angled leg design by only two points. The team decided to go with the hybrid design because the base of support on the angled leg design was too small.

9.0 Calculation of Center of Gravity of a Seated User

In order to properly calculate the changes in center of gravity due to user shifting, a body coordinate system was established that could be used to analyze all cases. Figure 63 shows the proper names for planes of the body, which were used in explaining the assumptions made in the calculations for center of gravity of a seated user.

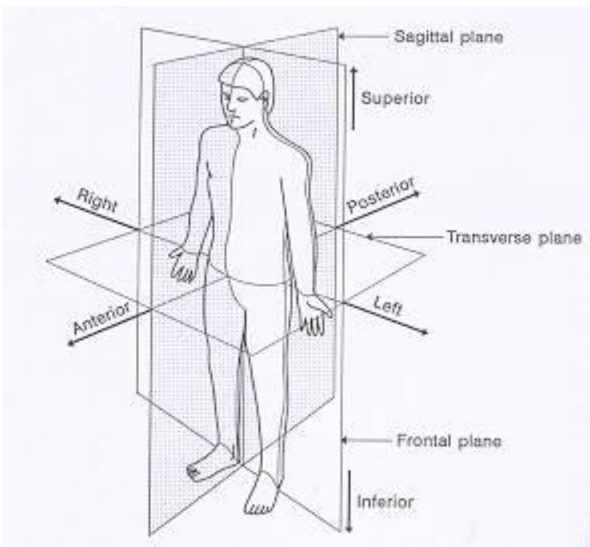

Figure 63: Planes of the Body

Sagittal Plane is a y-z plane that is perpendicular to the ground.

Coronal/Frontal Plane is an x-z plane perpendicular to the ground.

Transverse Plane is an x-y plane parallel to the ground.

Anterior is the positive y-direction for our system.

Superior is the positive z-direction for our system.

Right is positive x-direction for our system.

<u>Assumptions for Center of Gravity Calculations</u>

- Sitting upright
  - Coronal/frontal plane perpendicular with the ground
  - Sagittal plane perpendicular with the ground
  - Thighs parallel with ground and lower legs perpendicular to ground
  - Feet flat against the ground
  - Arms held flat against sides and perpendicular to the ground
- Leaning sideways
  - Coronal/frontal plane perpendicular with the ground
  - Sagittal plane of person at an angle of Θ with y-z plane
  - Thighs parallel with ground and lower legs perpendicular to ground

- Feet flat against the ground
- Arms held flat against sides

- Leaning Forward
  - Coronal/frontal plane at an angle of Θ with x-z plane
  - Thighs parallel with ground and lower legs perpendicular to ground
  - Feet flat against the ground
  - Arms held flat against sides
- Leaning Forward and to the side
  - Coronal/frontal plane at an angle of Θ with x-z plane
  - Sagittal plane at an angle of Θ with y-z plane
  - Thighs parallel with ground and lower legs perpendicular to ground
  - Feet flat against the ground
  - Arms held flat against sides
- Leaning forward and to the side with arms extended straight out
  - Coronal/frontal plane at an angle of Θ with x-z plane
  - Sagittal plane at an angle of Θ with y-z plane
  - Thighs parallel with ground and lower legs perpendicular to ground
  - Feet flat against the ground
  - Arms held extended forward from body and parallel with the ground

9.1 Center of Mass due to User Shifting

In order to determine how the user's center of mass affects the stability of the device anthropometric data was gathered in order to make some rough calculations about the shifting center of mass of a human while seated. In order to calculate this effectively, the weight, length, and center of mass approximation for different body segments needed to be known.

The body segments used for calculations were (1) head and neck, (2) thorax, (3) abdomen, (4) pelvis, (5) thigh, (6) lower leg and foot, (7) upper arm, (8) forearm, and (9) hand (Fig. 64). An x, y, and z-axis were set up so that there was a coordinate system to measure from. The z-axis runs vertically along the back of the user. The x-axis bisects the body from the front view for left and right side. The y-axis bisects the body through the center of the pelvis and thighs. This allowed us to more easily find center of gravity in the y-direction by eliminating thigh and pelvis from calculations for the y-direction.

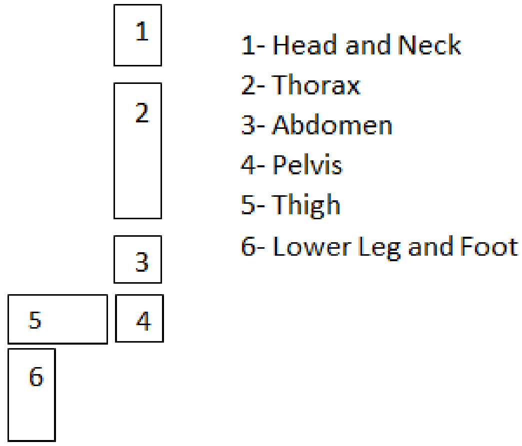

Figure 64: Body Segments for Center of Gravity Calculations

One position of the user that is important for evaluating the device is the normal seated position with the user sitting straight up with no lean to the right or left (Figure 65). This would be the ideal way for the user to sit on the device. In this case, the user's center of mass located in the z direction needed to be known. This could help evaluate whether or not the seat and base of support of the device are adequate for the user.

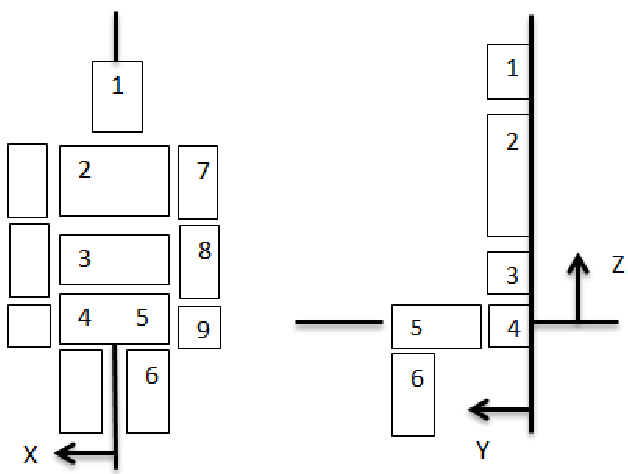

Figure 65: User Sitting Upright

The other position that is very important for evaluating the stability of the device is the user leaning to either the right or the left while seated upright (Figure 66). The base of support for the device is triangular since the base of support is a tripod. The shape of this base of support means that the device is more prone to tipping right or left rather than to the front or back. This means that the center of mass shifting in the left or right direction is very important.

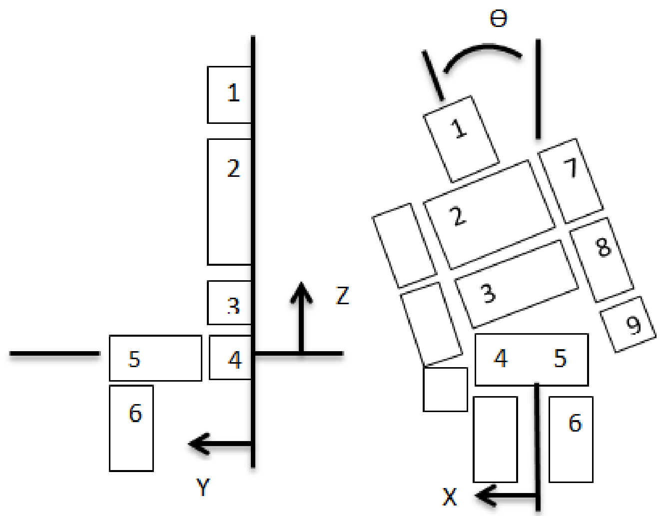

Figure 66: User Leaning to the Left/Right

Excel was used to calculate the weight of segments, length of segments, and proximal and distal lengths for center of gravity locations. The segment weights were found by multiplying the weight of the user, in this case 250lbs, by the fraction weight for certain segments. The segment, proximal, and distal lengths followed the same procedure except used the users height, in this case 74in which is 95% of males, instead of their weight. The Excel chart in Table 6 shows the values used for the center of gravity calculations.

Table 6: Lengths and Weights of Body Segments

	Weight(lbs)	height(in)								
	250	74					cg location of segment			
Segment	Segment Number	Qty	Fraction weight	weight of segmen	fraction length	length of segment	Proximal	Distal	Proximal lengt	Distal length
Head and Neck	1	1	8.10E-02	2.03E+01	1.08E-01	7.96E+00	5.50E-01	4.50E-01	4.38E+00	3.58E+00
Thorax	2	1	1.86E-01	4.64E+01	1.27E-01	9.40E+00	5.65E-01	4.35E-01	5.31E+00	4.09E+00
Abdomen	3	1	1.27E-01	3.16E+01	8.10E-02	5.99E+00	4.60E-01	5.40E-01	2.76E+00	3.24E+00
Pelvis	4	1	1.48E-01	3.70E+01	9.30E-02	6.88E+00	5.00E-02	9.50E-01	3.44E-01	6.54E+00
Thigh	5	2	1.10E-01	2.75E+01	2.41E-01	1.78E+01	4.31E-01	5.70E-01	7.66E+00	1.01E+01
Lower leg+foot	6	2	6.10E-02	1.53E+01	2.52E-01	1.86E+01	4.27E-01	5.74E-01	7.95E+00	1.07E+01
Upper arm	7	2	2.80E-02	7.00E+00	1.73E-01	1.28E+01	4.47E-01	5.53E-01	5.71E+00	7.06E+00
Forearm	8	2	1.60E-02	4.00E+00	1.59E-01	1.17E+01	4.32E-01	5.68E-01	5.07E+00	6.66E+00
Hand	9	2	6.00E-03	1.50E+00	5.75E-02	4.26E+00	4.68E-01	5.32E-01	1.99E+00	2.26E+00
				2.46E+02						

The approximate location of the center of gravity for the user in both the seated upright position without leaning and the seated upright position with leaning to the left or right then needed to be calculated. The Excel chart in Table 7 shows the calculations for the user sitting upright with no lean. In this case the center of gravity in the y-direction and the z-direction must be calculated. The center of gravity will lie along the x-axis as the user is not leaning to the left or right.

The distance of the center of gravity locations of each segment from the respective axis using the segment, proximal, and distal lengths were then found. The moments were then calculated for each of the body segments using the segment weights and the center of gravity locations in the respective direction. These moments were then summed and divided by the total sum of weights of all the body segments that affected that direction.

Table 7: Calculations for Sitting Upright without lean

		Z Direction			Y Direction		
Sitting upright							
		CG location	**Moment about X-Axis**		**CG location**	**Moment about Y-Axis**	
	Head and Neck	1.98E+01	4.00E+02		4.00E+00	8.10E+01	
	Thorax	1.13E+01	5.24E+02		4.00E+00	1.86E+02	
	Abdomen	2.76E+00	8.72E+01		4.00E+00	1.27E+02	
	Pelvis	0.00E+00	0.00E+00		4.00E+00	1.48E+02	
	Thigh	0.00E+00	0.00E+00		7.66E+00	2.11E+02	
	Lower leg+foot	-7.95E+00	-1.21E+02		1.78E+01	2.71E+02	
	Upper arm	9.69E+00	6.78E+01		4.00E+00	2.80E+01	
	Forearm	-2.44E+00	-9.76E+00		4.00E+00	1.60E+01	
	Hand	-1.11E+01	-1.66E+01	Sum of weights	4.00E+00	6.00E+00	Sum of weights
			9.32E+02	2.46E+02		1.07E+03	2.46E+02
		Center of Gravity in Z (in)		**Center of Gravity in Y (in)**			
		3.79E+00		4.37E+00			

The same procedure was used for the sitting upright with a left or right lean except the x-direction and y-direction needed to be calculated (Table 8). The y-directions were used by multiplying these distances by the theta angle the user is leaning at in order to find the center of gravity location of the segment in the x-direction at the theta angle of lean. This value helps to understand how far the user can lean while sitting before the device becomes a tipping hazard. This was done by comparing the base of support to how far the center of gravity is moving to the left or the right.

Table 8: Calculations for Sitting Upright with Left/Right Lean

Sidways lean							
	Theta angle(30)	X Direction			Z Direction		
	60						
		CG location	Moment about Y-Axis		CG location	Moment about X-Axis	
	Head and Neck	9.88E+00	2.00E+02		1.71E+01	3.47E+02	
	Thorax	5.65E+00	2.62E+02		9.79E+00	4.54E+02	
	Abdomen	1.38E+00	4.36E+01		2.39E+00	7.55E+01	
	Pelvis	0.00E+00	0.00E+00		0.00E+00	0.00E+00	
	Thigh	0.00E+00	0.00E+00		0.00E+00	0.00E+00	
	Lower leg+foot	3.98E+00	6.06E+01		-6.88E+00	-1.05E+02	
	Upper arm	4.84E+00	3.39E+01		8.39E+00	5.87E+01	
	Forearm	1.22E+00	4.88E+00		-2.11E+00	-8.45E+00	
	Hand	5.55E+00	8.32E+00	Sum of weights	-9.61E+00	-1.44E+01	Sum of weights
			6.14E+02	2.46E+02		8.07E+02	2.46E+02
		Center of Gravity in X (in)			Center of Gravity in Z (in)		
		2.50E+00			3.28E+00		

The next case that was considered is the user leaning both forward and to the side (Figure 67). This shifts the center of gravity for the user not only forward in the z-axis but also further to the right or the left in the x-axis.

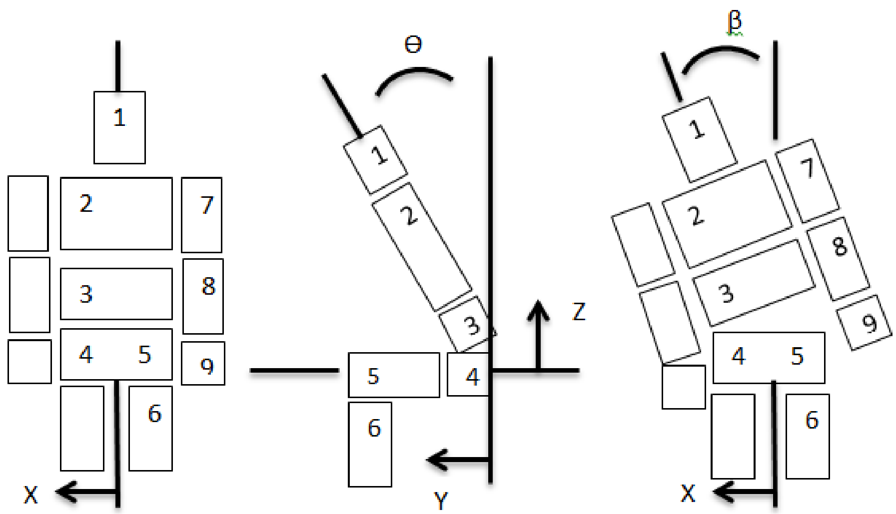

Figure 67: User Leaning both Forwards and to the Side

The same calculations were made but in this case there are two different angles that need to be taken into account and are shown in Table 9.

Table 9: Calculations for Leaning Forward and to the Side

Leaning forward and side										
theta angle(forward)	beta angle(sideways	X Direction			Z Direction			Y Direction		
60	60									
		CG location	Moment about Y-Axis		CG location	Moment about X-Axis		CG location	Moment about	
	Head and Neck	9.88E+00	2.00E+02		9.88E+00	2.00E+02		1.71E+01	3.47E+02	
	Thorax	5.65E+00	2.62E+02		5.65E+00	2.62E+02		9.79E+00	4.54E+02	
	Abdomen	1.38E+00	4.36E+01		1.38E+00	4.36E+01		2.39E+00	7.55E+01	
	Pelvis	0.00E+00	0.00E+00		0.00E+00	0.00E+00		4.00E+00	1.48E+02	
	Thigh	0.00E+00	0.00E+00		0.00E+00	0.00E+00		7.66E+00	2.11E+02	
	Lower leg+foot	3.98E+00	6.06E+01		-3.98E+00	-6.06E+01		1.78E+01	2.71E+02	
	Upper arm	4.84E+00	3.39E+01		4.84E+00	3.39E+01		8.39E+00	5.87E+01	
	Forearm	1.22E+00	4.88E+00		-1.22E+00	-4.88E+00		2.11E+00	8.45E+00	
	Hand	5.55E+00	8.32E+00	Sum of weights	-5.55E+00	-8.32E+00	Sum of weights	9.61E+00	1.44E+01	Sum of weights
			6.14E+02	2.46E+02		4.66E+02	2.46E+02		1.59E+03	2.46E+02
			Center of Gravity in X (in)		Center of Gravity in Z (in)		Center of Gravity in Y (in)			
			2.50E+00		1.90E+00		6.46E+00			

The final case that was considered was leaning both forward and to the side with arms extended straight out in front of the user (Figure 68).

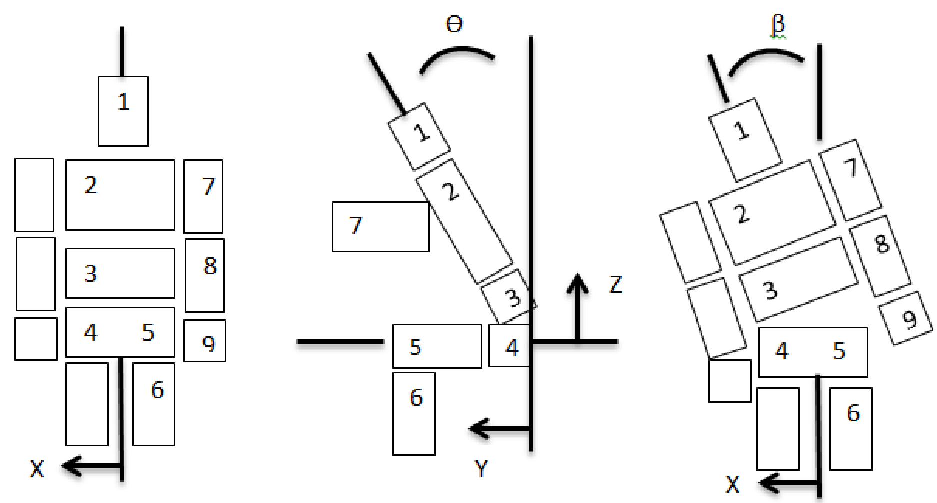

Figure 68: User Leaning Forward and to the Side with Extended Arms

The same calculations were then made as the forward and side lean with the addition of the mass of the arms located out away from the body. The excel chart in Table 10 shows the results of these calculations.

Table 10: Calculations for Leaning Forwards and to the Side with Extended Arms

Leaning Both with arms extended										
theta angle(forward)	beta angle(sideways	X Direction			Z Direction			Y Direction		
60	60									
		CG location	**Moment about Y-Axis**		**CG location**	**Moment about X-Axis**		**CG location**	**Moment about**	
	Head and Neck	9.88E+00	2.00E+02		9.88E+00	2.00E+02		1.71E+01	3.47E+02	
	Thorax	5.65E+00	2.62E+02		5.65E+00	2.62E+02		9.79E+00	4.54E+02	
	Abdomen	1.38E+00	4.36E+01		1.38E+00	4.36E+01		2.39E+00	7.55E+01	
	Pelvis	0.00E+00	0.00E+00		0.00E+00	0.00E+00		4.00E+00	1.48E+02	
	Thigh	0.00E+00	0.00E+00		0.00E+00	0.00E+00		0.00E+00	0.00E+00	
	Lower leg+foot	3.98E+00	6.06E+01		-3.98E+00	-6.06E+01		0.00E+00	0.00E+00	
	Upper arm	7.70E+00	5.39E+01		7.70E+00	5.39E+01		9.71E+00	6.79E+01	
	Forearm	7.70E+00	3.08E+01		7.70E+00	3.08E+01		2.18E+01	8.73E+01	
	Hand	7.70E+00	1.15E+01	Sum of weights	7.70E+00	1.15E+01	Sum of weights	3.05E+01	4.57E+01	Sum of weights
			6.63E+02	2.46E+02		5.42E+02	2.46E+02		1.23E+03	2.46E+02
			Center of Gravity in X (in)		**Center of Gravity in Z (in)**		**Center of Gravity in Y (in)**			
			2.70E+00		2.20E+00		4.99E+00			

It is worth noting that the worst case user for every case was the tallest user. Through the calculations it was realized that the length of the limbs and therefore the position of center of gravity in different limbs affected the overall center of gravity much more than the mass of the limbs. The tallest user will most likely have the longest limbs and other body segments and so their center of gravity changes much more when leaning or extending their arm than a shorter user. The cases above were all calculated with the tallest user at a height of 74” so that the worst case scenario could be examined.

10.0 Final Design and Analysis

The final design was created in Creo Parametric 2.0 and used to calculate the static forces. The seat assembly and leg assembly were focused on for the static analysis. In addition, revisions to the design were created to help make it easier to manufacture and operate by the user. Using the resultant forces calculated by Creo, the stress analysis on the pins and buckling analysis on the support rods were calculated.

10.1 Modelling the Device in Creo Parametric 2.0

After completing the static analysis for the device it was determined that even calculating the statics for the seat itself was statically indeterminate. Creo Parametric mechanism modeler was used to try to find the forces on the different members of the design. The device was split up into the seat mechanism assembly and the leg mechanism assembly. Determining the connection of the different parts inside the assembly to get the correct force during the analysis proved difficult. The connection points were modeled in a way that left the device at 0 degrees of freedom.

10.1.1 Seat Assembly

The seat used a combination of pin, ball, and slider joints to set up the assembly with no redundancies (Fig. 69). The back collar is mated to the main shaft as a slider joint so that it can only translate up and down the main shaft axis. The back collar is connected to the back bracket pin by a ball joint. This ball joint allows us to determine the x, y, and z forces on the back bracket pin. The seat was made rigid to the back bracket pin and both of the upper support pins. Although this is not the case in reality, in order to get the right forces in the analysis it was necessary to make the connection between the seat and all the pins rigid. Each of the upper support pins are then connected to their respective seat support rods through a ball joint. This ball joint is used in order to model the support rods as two-force members. The lower support pin is connected to the lower support bracket by a pin joint connection. Each seat support rod is connected to the respective lower support pin by a pin joint. This has the effect of mimicking a

U-joint between the support rods and the lower support pin and allows us to measure the moment forces on this lower support pin in addition to the x, y, and z forces.

These connection points are not completely realistic however they are the best approximation for the forces measured in the model. The ball joints connecting the upper support pins to the support rods were important to finding the necessary forces to perform stress analysis but the support rods are not 2 force members in reality.

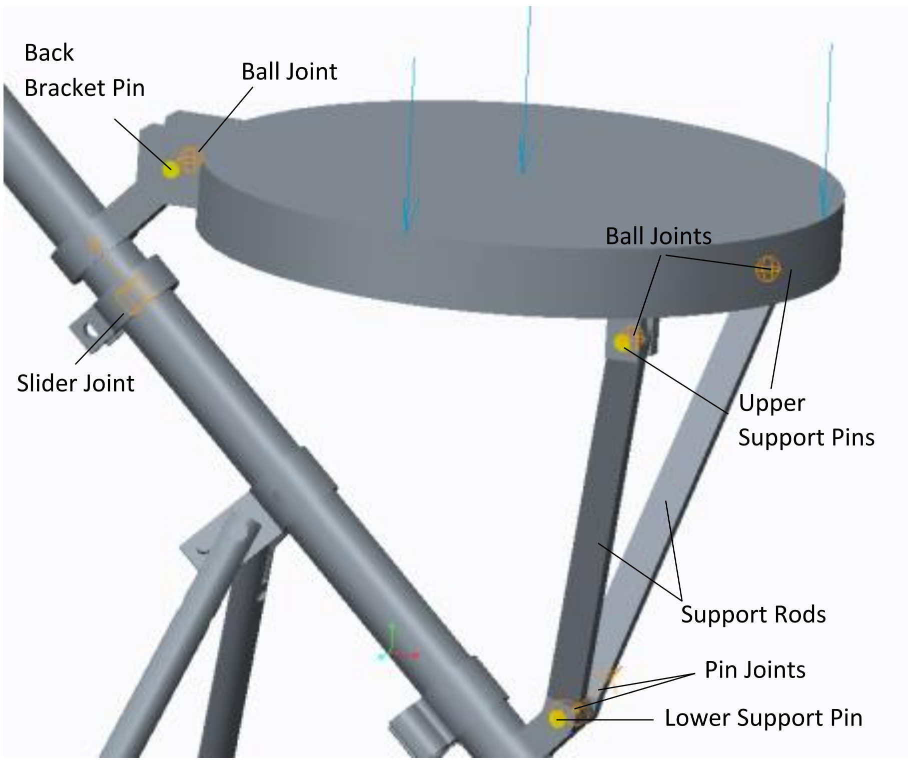

Figure 69: Seat Assembly and Joints

Using the *Measure Results of Analyses* function in Creo it can be determined how many degrees of freedom and redundancies exist in the system. It is important to eliminate all degrees of freedom and redundancies in the system in order to ensure that the calculated forces are correct within the model. Using this function it was found that both the degrees of freedom and the redundancies in the system were 0. This means that the forces that were calculated within the system were accurate.

10.1.2 Leg Assembly

The leg assembly consisted of pin, planar, ball, and cam joints (Fig. 70). The main shaft was pinned to the bottom plane of the assembly. This pin joint was chosen in order to measure the x, y, and z forces along with the x and y moments. The support legs were both connected to the leg pins using pin joints. The support legs then had cam joint connections to the stop pins on the bracket. The bottom of each of the support legs had to be modelled using a combination of ball and planar joints in order to correctly measure the reaction forces at these points. Each of the footcaps are connected to the support leg shafts through a ball joint connection. The bottom of the footcap was then connected to the bottom assembly plane with a planar joint connection. These connections allowed us to find the forces running axially along the support legs which were important for the buckling analysis. The pin connections on the leg pins were important in finding the shear forces in the pins.

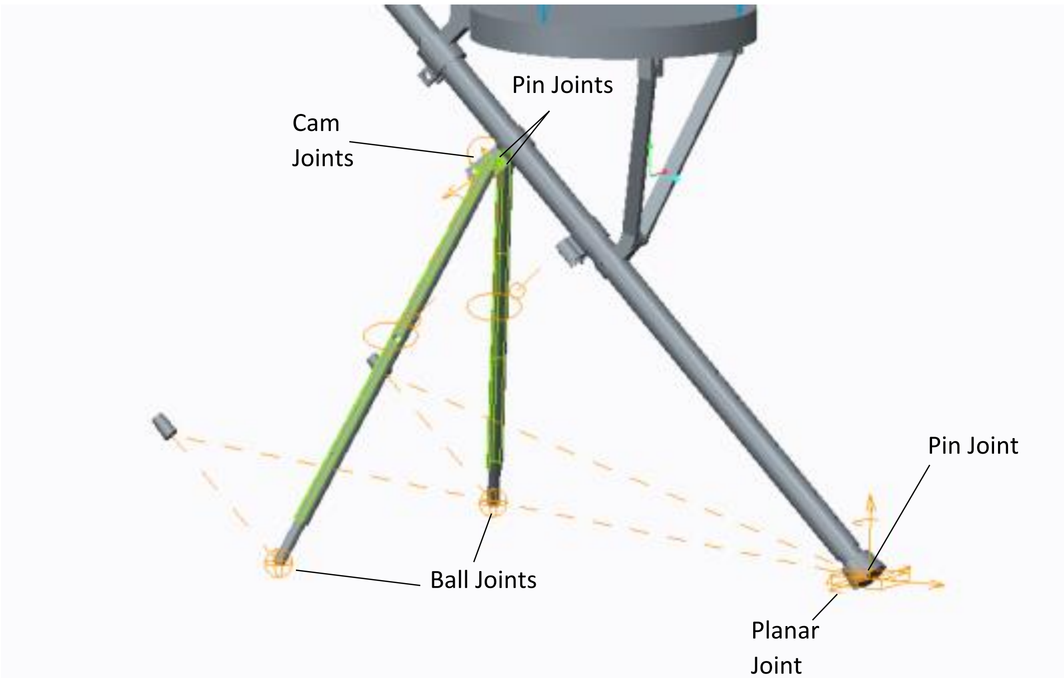

Figure 70: Leg Assembly

10.2 Changes Made to Final Design

10.2.1 Support Leg Bracket Re-design

The idea of this design is to keep the leg deployed through the use of a spring. The spring chosen to be used was a torsion spring (Fig. 71). The spring will be mounted on the bracket and the feet of the spring will be between the support legs and the main shaft in order to actively push them apart. The bracket shape has been changed and overall made much smaller. This would allow us to manufacture the collar and brackets as a singular piece eliminating any need for welding or other connection points.

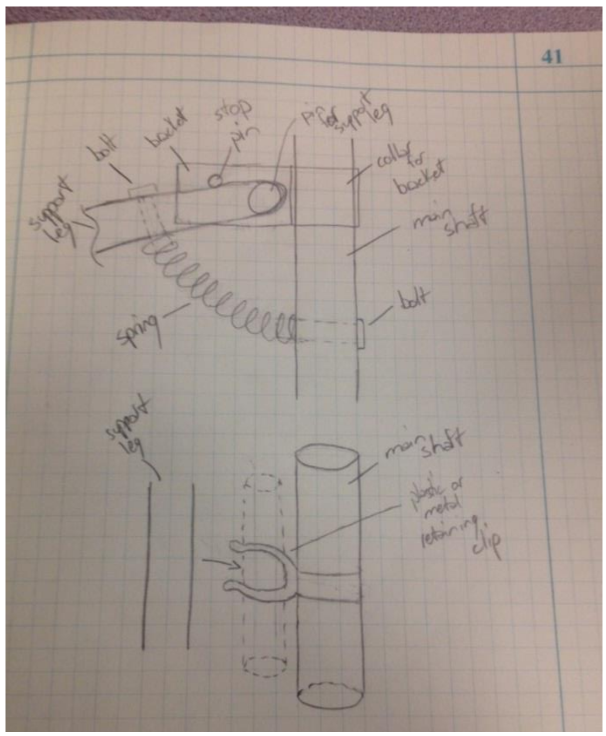

Figure 71: New Folding and Locking Mechanism

In order to stop the leg at the correct angle there is a stop pin in the bracket. When the leg reaches this maximum angle the support leg shaft would rest against the stop pin as seen in Figure 73. As the user sits on the seat, the support leg comes up against the stop pin and “locks” the position. This does however mean that the pin is taking all of the force from the support leg.

Finally, a means to secure the support leg in the locked position when the device is in use as a cane/crutch was needed. It was decided to use a pipe retaining clip. This will keep the leg secure while in use but will also allow the user to easily deploy the support legs (Fig. 72). These clips could possibly be purchased or if made of plastic even 3D printed.

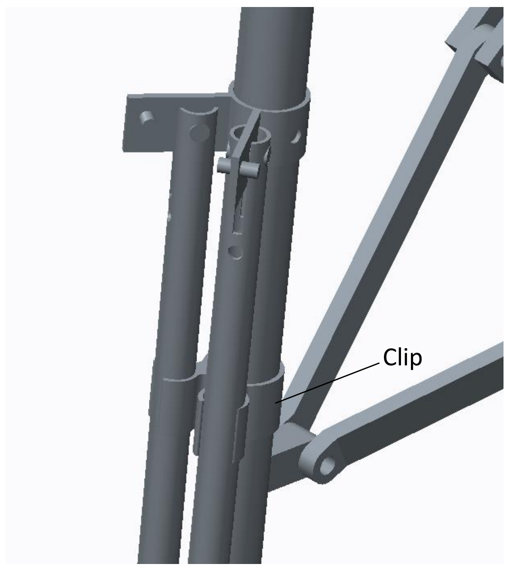

Figure 72: Support Legs in Locked in Cane/Crutch Position

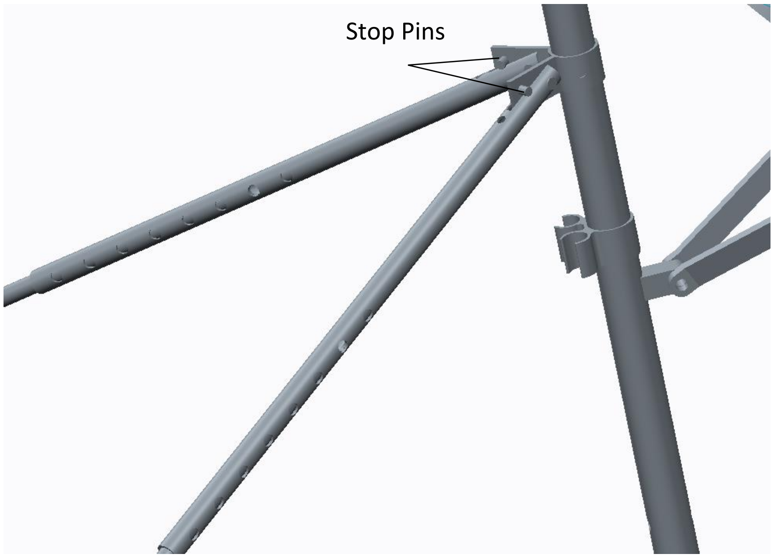

Figure 73: Legs in Deployed Position showing stop pin

10.2.2 Seat Design Revision

The team decided to look at seats that might be able to be purchased and repurposed for the device. A seat from a cane seat product that already existed was looked into first. The team believed that this might offer the easiest solution as the seat size was the same for the product as for the design. The issue with this option was the placement of the brackets for the design compared to the seat on the purchased device.

Another option was to try to find a stool with a circular seat of the same size. However, commercially available stools have diameter of roughly 12", this includes kitchen, bar, and garage stools. The size of the seat could not be changed in the design without a significant redesign. This meant that there was not a stool that could be purchased and then easily repurpose for the device.

The third option that the team ended up deciding on was to take CDX plywood and cut it to the 9"diameter. This would be a relatively cheap option as the plywood is not expensive. This would give us the base of the seat that we could attach the brackets to in the places we need for our design. After the brackets are attached a cushion/foam could be put over the top of the seat to make it comfortable for the user. A 1/2" thick plywood piece would be a good base to attach brackets to and would not add much weight to the design, along with not having to redesign a major portion of the device around the seat.

10.3 Static/Stress Analysis

Figure 74: Full Seat Assembly

10.3.1 Static Analysis

Static Analysis was conducted using Creo Parametric 2.0 since the design was too complicated to solve through hand calculations. The tables in Appendix A show the resultant forces on the pins, brackets, etc. from 250 lbs. of force on the center of the seat, front of seat, and side of seat. The XYZ coordinate systems used in the calculations were the local coordinate systems of the parts.

10.3.2 Stress on Pins

The figures in Appendix B show the stress analysis of all of the pins at the three different loadings (center, front, and side). The pins all exhibited double shear so the equation to solve for shear stress is:

$$\frac{F/2}{A} \tag{7}$$

where F is the force on the pin and A is the cross-sectional area. The pins are all 0.25 inches in diameter. There are two component forces acting on the pins: Z and Y forces. The shear stress in both components was calculated and then the magnitude of those shear forces was taken. The equation for the magnitude is:

$$\sqrt{\tau_Z^2 + \tau_Y^2} \tag{8}$$

The yield strength for mild steel is roughly 35.8 kpsi. From the data, none of the shear stresses exceeded that yield strength (the highest being 5.65 kpsi); this yields a factor of safety of approximately 6.

10.3.3 Buckling Analysis

Buckling is characterized as a sudden sideways failure of a support member that is under compressive stress. The members that have a possibility of buckling are the two seat support rods and the two support legs. These four members have significant axial compressive forces. Using the Euler formula the maximum axial load that the members can carry without buckling can be found. The Euler formula does not take into account lateral forces, however even if lateral forces were taken into account the value of the critical load would remain roughly the same.

Buckling of Seat Support Rods

The seat support rods are under axial forces from the upper support pins. The forces that are used for the buckling analysis of these members are the y and z forces on the support rods. In the case of the device, the rod is not completely vertical and so the y and z forces need to be converted into the component of the force that runs axially through the member. These members are three dimensional, however for the buckling analysis, they are being regarded two force members. The forces in the y and z directions of the local coordinate sysem were found using the Creo mechanism modeller. In order to determine the buckling in 2D, the higher resulting axial force from either the y or z direction was taken. This will ensure that the factor of safety is acceptable for the support rods. Table 11 shows the resulting forces on the seat support rod from the three loading conditions on the seat.

Table 11: Resultant Forces on Seat Support Rod

Center of Seat		Front of Seat		Side of Seat	
Fz(lb*F)	-77.1	Fz(lb*F)	-147	Fz(lb*F)	-228
Fy(lb*F)	-25.7	Fy(lb*F)	-49.1	Fylb*F)	-106

The next step was to convert these y and z direction forces into the force along the axis of the support rod shafts. In order to do, the angle of the support rods with respect to the established coordinate system for both the y and z direction was taken. Fig. 75 shows the angles required to determine the axial loads on the rods.

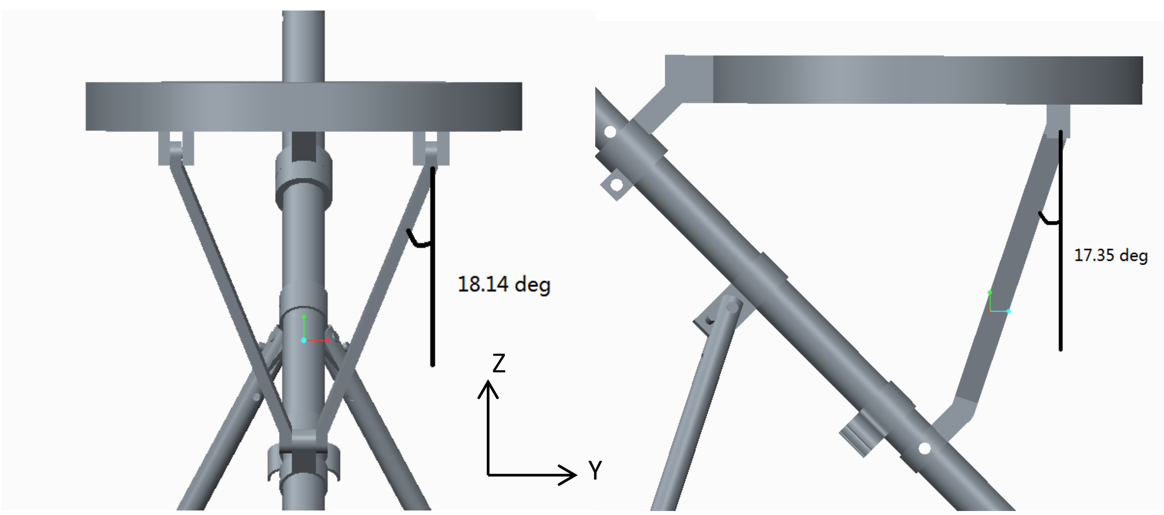

Figure 75: Angles Required for Axial Loads

The equation needed to determine the critical load that will buckle the rods is the Euler Formula:

$$F_{cr} = \frac{\pi^2 * E * I}{(K * L)^2} \quad (9)$$

where E is the modulus of elasticity, I is the area moment of inertia, K is the effective column length factor, and L is the unsupported length of the column. The area moment of inertia for a rectangular cross section is as follow:

$$I = \frac{bh^3}{12} \tag{10}$$

where b is the base and h is the height. The base of the support rod is 1/2 in. and the area moment of inertia for three different heights of the rod were calculated and found to be 1/4in, 3/16in, and 1/8in (Table 12).

Table 12: Area Moment of Inertia

Base(in)	Height(in)	Area Moment of Inertia(in^4)
0.50	0.25	0.00065
0.50	0.19	0.00029
0.50	0.13	0.000087

The other variables needed to solve the Euler equation are the modulus of elasticity, the unsupported length of column, and the effective column length factor. The modulus of elasticity for Al 6061 is 10000ksi. The length of the rod is 6.25in and because it is pinned on both sides the effective column length factor is 1.

$$F_{cr\ for\ 1/4"} = \frac{\pi^2 * 10000000 * .00065}{(1 * 6.25)^2} = 1640\ lb *$$

$$F_{cr\ for\ 3/16"} = \frac{\pi^2 * 10000000 * .00029}{(1 * 6.25)^2} = 733\ lb * F$$

$$F_{c\ for\ 1/8"} = \frac{\pi^2 * 10000000 * .000087}{(1 * 6.25)^2} = 205\ lb * F$$

After the critical forces have been determined for the different thicknesses of the rods the factor of safety can be found.

$$F.S = \frac{critical\ load}{actual\ load}$$

The factor of safety is an important value to calculate in order to determine the relative safety of the design. In the case of of the support rods, the maximum load that would be experienced would be during the force at the side of the seat condition. The maximum force experienced along the support rod member would be 335lb*F. This will be used as the load when calculating the factor of safety because that is the worst case scenario.

$$F.S_{at\ 1/4"} = \frac{1640}{335} = 4.9$$

$$F.S_{at\ 3/16"} = \frac{733}{335} = 2.2$$

$$F.S_{at\ 1/8"} = \frac{205}{335} = 0.61$$

The thickness of 1/8in for the support rods is unacceptable as it will buckle under the worst case scenario. The 3/16in and 1/4in thicknesses will not buckle under the worst case scenario but the 1/4in thickness has roughly double the factor of safety.

Buckling of Leg Support Members

The leg support shafts are under axial loads from the leg support pins (Table 13). However, in this case the local coordinate system is set up along the two hinges on the support leg bracket. This means that the legs are only angle in one plane and so the forces running along the axis of these support legs can be found relatively easily.

Table 13: Axial Forces Along Leg Support Shafts

Center of Seat		Front of Seat		Side of Seat	
Fz(lb*F)	12.1	Fz(lb*F)	6.17	Fz(lb*F)	12.1
Fy(lb*F)	-89.4	Fy(lb*F)	-45.7	Fylb*F)	-89.4

The x and y direction forces were converted into the force along the axis of the support leg shafts. The angle of the support rods with respect to the established coordinate system for both the y and z direction were taken. Fig. 76 shows the angles required to determine the axial loads on the support legs.

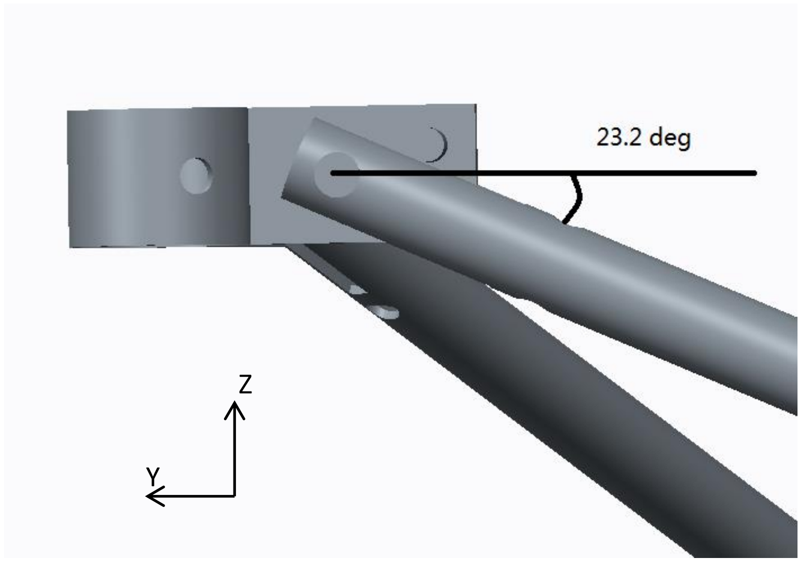

Figure 76: Angle Required for Axial Loads on Support Legs

As before the equation needed in order to determine the critical load that will buckle the rods is the Euler Formula (3).

$$F_{cr} = \frac{\pi^2 * E * I}{(K * L)^2}$$

Where *E* is the modulus of elasticity, *I* is the area moment of inertia, *K* is the effective column length factor, and *L* is the unsupported length of the column. The area moment of inertia for a circular hollow cross section is as follows:

$$I = \frac{\pi(D^4 - d^4)}{64} \qquad (11)$$

Where *D* is the outer diamter of the hollow shaft and *d* is the inner diameter. The outer diamter of the shaft was set to 1/2in and both 0.402in and 0.370in were used as inner diameters (Table 14).

Table 14: Area Moment of Inertia

Outer Diameter(in)	Inner Diameter(in)	Area Moment of Inertia(in^4)
0.5	0.402	0.0018
0.5	0.37	0.0021

The other variables needed to solve the Euler equation are the modulus of elasticity, the unsupported length of column, and the effective column length factor. The modulus of elasticity for Al 6061 is 10000ksi. The length of the shaft is 14.5in at the lowest seat height and 20.4in at the highest seat height. The effective column length factor used for the support leg shafts was 0.7, as one end is pinned and the other end is in a fixed position on the ground. In reality the shaft is not fixed to the ground, however in order to approximate the buckling forces, it is assumed that the shaft cannot move laterally. It is assumed that it's a fixed member because it is not pinned.

The two following calculations are for the shaft length of 14.5in for the lowest seat height:

$$F_{cr\ for\ 0.402"} = \frac{\pi^2 * 10000000 * .0018}{(0.7 * 14.5)^2} = 1750\ lb *$$

$$F_{cr\ for\ 0.370"} = \frac{\pi^2 * 10000000 * .0021}{(0.7 * 14.5)^2} = 1340\ lb *$$

The next two calculations are for the shaft length of 20.4in corresponding to the highest seat height.

$$F_{cr\ for\ 0.402"} = \frac{\pi^2 * 10000000 * .0018}{(0.7 * 20.4)^2} = 871\ lb *$$

$$F_{cr\ for\ 0.370"} = \frac{\pi^2 * 10000000 * .0021}{(0.7 * 20.4)^2} = 678\ lb * F$$

The factor of safety now needs to be calculated again for the support leg shafts. The worst case scenario for the actual load for this case is 67.63lb*F.

$$F.S_{at\ 0.402"\ and\ 14.5"} = \frac{1750}{102} = 17.2$$

$$F.S_{at\ 0.402"\ and\ 20.4"} = \frac{871}{102} = 8.5$$

$$F.S_{at\ 0.370"\ and\ 14.5"} = \frac{1340}{102} = 13.1$$

$$F.S_{at\ 0.370"\ and\ 20.4"} = \frac{678}{102} = 6.6$$

All of these factors of safety are very high. It can be seen that at the higher seat height there is a lower critical load as the length of the shaft has increased significantly. However, there is still a very high safety factor for the higher seat height.

11.0 Component Selection

The components used in our final design for manufacturing include aluminum tubing, aluminum stock, Clevis pins, snap buttons, and the hand grip and cuff of a forearm crutch on the market.

11.1 Aluminum Tubing

A large part of our device is made up of aluminum tubing for the main shaft and the support legs, including the telescoping members. Aluminum 6061 was chosen because it is much lighter than steel and it has sufficient strength for the application of our device. The main shaft and support leg shafts needed to telescope so the outer diameter, inner diameter, and wall thickness for each length of aluminum tubing was taken into account. The main length of aluminum tubing for the main shaft has outer diameter of 1", inner diameter of 0.902", and wall thickness of 0.049". The telescoping member of the main shaft is aluminum tubing has outer diameter of 7/8", inner diameter of 0.777", and wall thickness of 0.049". This means that the clearance between the inner diameter of the main shaft and the outer diameter of the telescoping member is 0.027". This leaves us with enough room to telescope the shaft but is tight enough to stop unwanted movement. The larger tubing for the support legs has an outer diameter of ½", inner diameter of 0.402", and wall thickness of 0.049". The telescoping members for the support legs have outer diameter of 3/8", inner diameter of 0.277", and wall thickness of 0.049". Our analyses showed that wall thicknesses of 0.049" for our support legs were sufficient for the buckling forces.

11.2 Aluminum Plate

In order to manufacture the seat support rods and the seat brackets, ½" X 8" X 8" aluminum 6061 plate was chosen. A plate with thickness of ½" was chosen so that the seat support rods could be cut out with a band saw in one process instead of trying to cut out a ¼" thickness and then bending the rod to the correct angle. These seat support rods were ¼" X ½" and the ¼" thickness was necessary in order to have a sufficient factor of safety for buckling forces. The seat brackets were also cut from this aluminum stock and attached to the plywood seat in the proper places.

A piece of ¾" aluminum stock was used to manufacture the collars for the seat. Originally, steel collars were going to be made and have the tabs welded to them. However, after speaking with the lab assistants in Washburn, it was determined that it would be beneficial to machine them as one part which would add strength and wouldn't change the shape via welding.

11.3 Clevis pins

There are a number of pins used in the device including pins connecting the seat support rods to the seat and the support legs to the support leg bracket. In addition ¼" diameter steel clevis pins were used in order to adjust the telescoping members of the support legs. Originally, snap buttons for the telescoping of the support legs were going to be used; however, the inner diameter of the smaller support leg tube is too small to fit snap buttons. Due to the fact that the user should only have to adjust support legs once and then never again it was determined that using clevis pins was an acceptable alternative. Additionally, dowel pins were going to be press fit for the seat support rods and support legs but it was determined that it was unnecessary and that clevis pins would be suitable and easier to assemble.

11.4 Snap Buttons

Snap buttons were chosen to adjust the telescoping member along with holding the seat in a secure position while it is folded up against the main shaft. The snap buttons that were chosen for the telescoping member of the main shaft had a head diameter of ¼", a head height of 0.280", and are used in round tubing of inner diameters 0.620" to 0.870".

11.5 Hand Grip and Forearm Cuff

Instead of trying to manufacture a hand grip and an adjustable forearm cuff, an existing aluminum forearm crutch was bought and modified it to fit our device. The outer diameter of the forearm crutch was also 1” and so the transition from our manufactured main shaft to the upper hand and arm section is perfect.

12.0 Manufacturing

Many different processes were used to create the parts necessary to successfully manufacture the device. Examples include cutting aluminum tubing to length for the main shaft and support legs, drilling holes through tubing and other components so as to fix the parts together, and milling the aluminum collars that connect the leg assembly and seat assembly to the main shaft.

12.1 Main Shaft and Support Legs

The main shaft and support legs were cut from aluminum tubing with outer diameters (OD) of 1”, 7/8”, 1/2”, and 3/8” respectively. The 1” OD tubing was used as the primary tubing of the main shaft and the 7/8” tubing was used as the main shaft’s telescoping part. The 1” tube was cut to 28 inches long and the 7/8” tube was cut to 9 inches long using band saw. The ½” and 3/8” OD tubes were used to manufacture the rear support legs of the device. They were cut twice to lengths of 13 inches and 9 inches respectively using a band saw, ending up with two identical legs and two telescoping sections (Fig. 77).

Figure 77: Support Legs and Telescoping Sections

The next step was to drill holes into the tubing to accommodate for different user heights. For the main shaft, seven ¼" holes were drilled into the 1" OD tubing at one end of the shaft using a drill press, equally spaced 1" apart (Fig. 78).

Figure 78: Main Shaft with Drilled Holes

One ¼" hole was drilled into the 7/8" OD tubing one inch from the end. The 3/8" OD tubing was also drilled using the drill press. A 3/16" hole was drilled one inch from the end. Since it was very difficult to get everything aligned perfectly straight and centered on the drill press, many of the holes came out non-uniformly along the main shaft. We decided to drill the remaining holes in the ½" support legs using the milling machines in Washburn.

The ½" tubing had two different operations for the milling machines. The first operation was to drill the 3/16" holes and a ¼" hole. This was done by creating a file that the milling machine could read by importing our Creo files into the program ESPRIT. A drilling operation was then created in ESPRIT for the 3/16" holes. The holes were spaced 0.86 inches apart near one end of the shaft and a 1/4" hole was drilled on the other end of the shaft (Fig. 79).

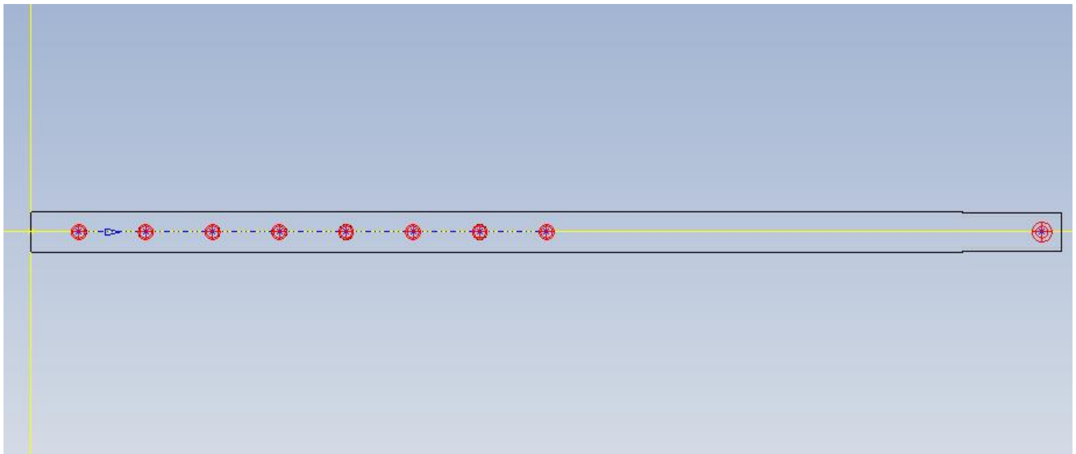

Figure 79: ESPRIT Program for Drilling Holes in Support Leg

The second operation was to mill a 1/8" slot 90 degrees from the holes on the ¼" hole side of the tube. Another ESPRIT file was created (Fig. 80) to machine the slot using the milling machine. This process was then repeated for the other ½" tube.

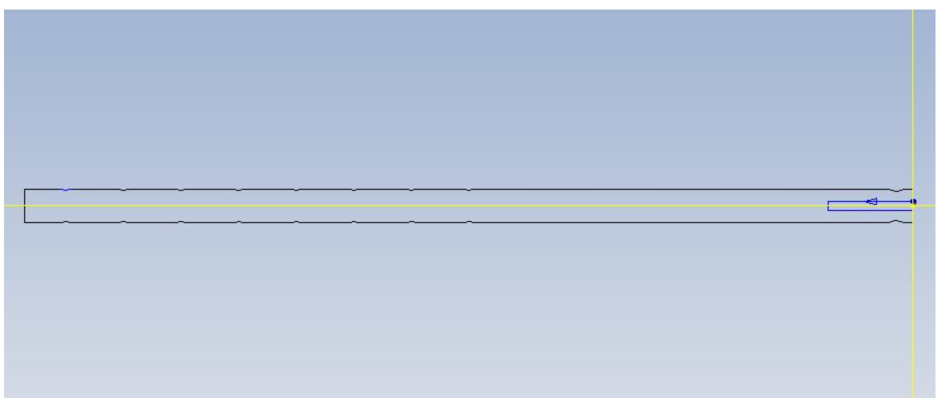

Figure 80: ESPRIT Program for Milling Slot in Leg Support

A pair of ¼" snap buttons was used to attach the 1" OD and 7/8" OD tubes together. The snap buttons were placed in the pair of holes in the 7/8" tube (Fig 81). Then the tube was put inside the 1" tube near the end with the 7 holes. The snap button then fit into those sets of holes on the 1" tube. This allowed the part to telescope by pushing the buttons in, sliding the tube to the desired length, and releasing the buttons to fit the new holes.

Figure 81: Telescoping tube for Main Shaft with Snap Buttons

The ½" and 3/8" tubes were too small to use push buttons however the concept is the same. Two 3/16" screws were used to fix the telescoping 3/8" tube to the ½" tube and then secured using a nut.

12.2 Seat and Support Rods

The seat was manufactured using ½" CDX plywood. A 9" circle was traced on the plywood and then cut out using a jigsaw. Holes were then drilled into the plywood in order to accommodate the seat's rear bracket and the two small brackets beneath the seat connected to the seat support rods. The rear bracket of the seat was constructed using ½" aluminum plating and cutting it into two L-shaped pieces using a jigsaw (Fig 82).

Figure 82: L-Shaped Brackets for Seat Assembly

One ¼" hole was drilled into each of the L-shaped aluminum pieces using a drill press and attached to the seat using two ¼" bolts and two Tee Nuts. The Tee Nuts allowed for the bolts to be screwed into the plywood while also leaving a relatively flat surface for the user to sit. The two small U-shaped brackets were also cut out of a ½" aluminum plate using a band saw. A ¼" hole was drilled through the bottom of the U-shaped brackets in order to attach them to the seat with the ¼" bolts and Tee Nuts. Another ¼" hole was drilled through both sides of the bracket to accommodate the seat support rods.

The seat support rods were manufactured using a ½" aluminum plate. The side profile of the support rods were printed out, traced on the aluminum plate, and then cut out using a band saw. A ¼" hole was drilled on both ends of the support rods using a drill press. One end of each support rod was then connected to a U-shaped bracket with a universal ¼" clevis pin. Figure 83 shows the seat assembly with the support rods connected to the U-brackets of the seat.

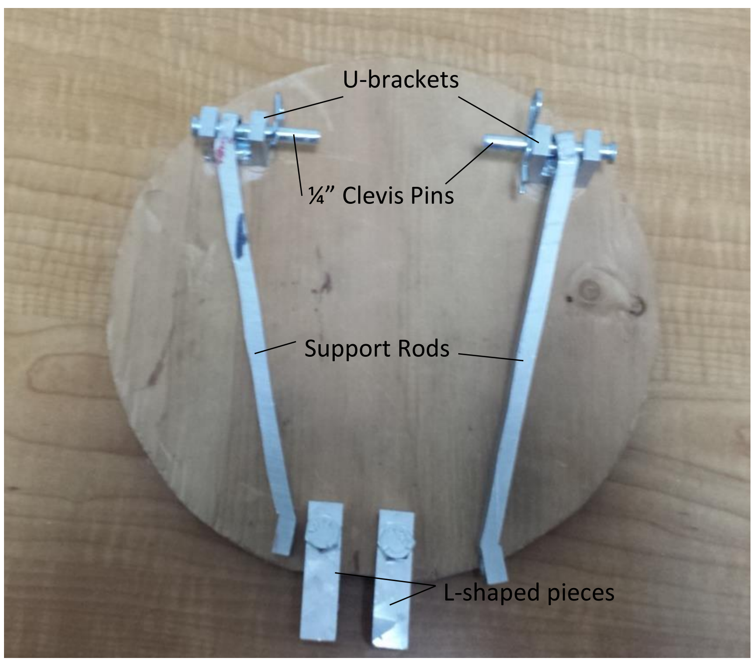

Figure 83: Seat Assembly with U - Brackets and Support Rods

12.3 Collars and Leg Assembly

There are four collars on the device: an upper collar, a lower collar, a stop collar, and the leg assembly collar. The stop collar was simply manufactured by cutting a steel tube with a 1" inner diameter to a 1/2" length using a band saw and then a ¼" hole was drilled through the center with a drill press. The other three collars were manufactured using the milling machines because it was easier to manufacture compared to cutting out components and welding them together.

The top collar part file was imported into ESPRIT and a milling operation was created for it using a 3/8" end mill (Fig. 84).

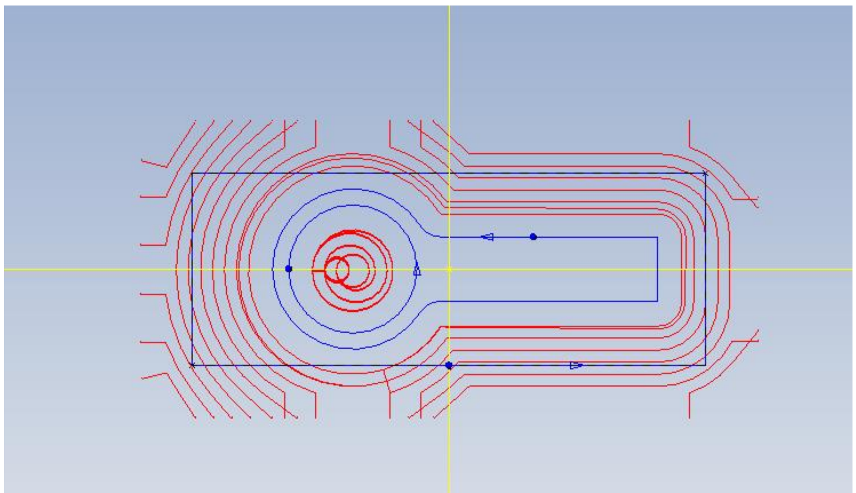

Figure 84: Top Collar ESPRIT File for Milling Machine

A piece of aluminum ½" stock was used for the operation. The machine first milled the outside of the collar and then milled the 1" ID. However, the outside milling was only completed halfway into the stock since the machine needed something to hold on to. When the machine was finished, the part was then flipped over, clamped to the mill using the newly milled side, and then a new operation was started to finish the part.

The operation for the bottom collar was nearly identical to the top collar except that the size of the stock was a different size to accommodate the different sized collar (Fig. 85). One ¼" hole was then drilled through the ends of the tabs on the collars using a drill press so that they could be attached to the seat assembly.

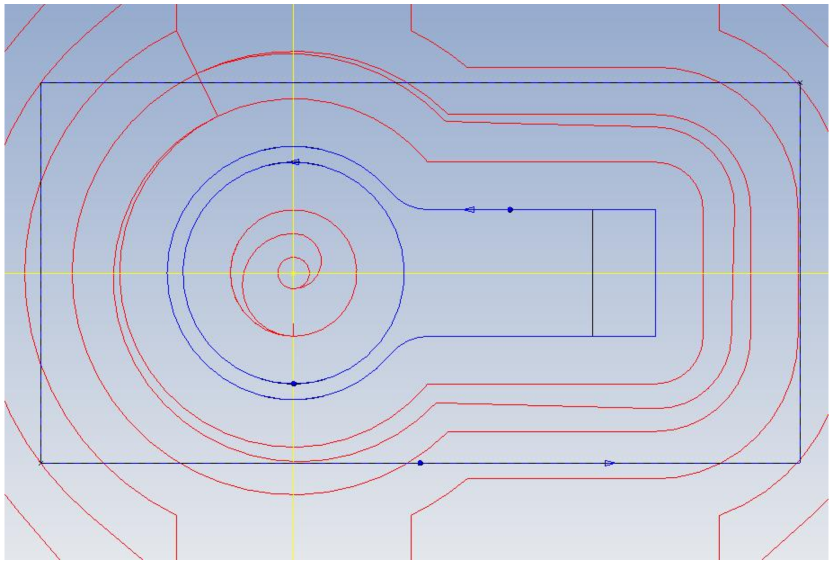

Figure 85: Bottom Collar ESPRIT File for Milling Machine

The leg assembly collar was machined out of a ¾” aluminum stock using a 3/8” end mill. However, the leg assembly collar used only one operation (Fig. 86). Two holes were drilled into the aluminum stock so that it could be fastened down to the machine. The 3/8” end mill then machined the outside of the collar and then proceeded to machine the 1” bore in the collar. The two tabs on this collar each had two holes: a ¼” hole and a 3/16” hole. These holes were drilled using a drill press.

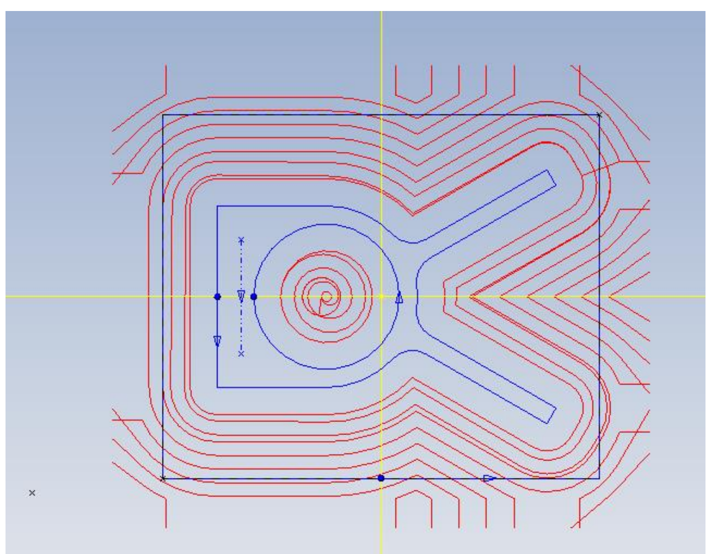

Figure 86: Leg Assembly Bracket ESPRIT File for Milling Machine

All of the collars were then attached to the main shaft by drilling ¼” holes through them and the main shaft and fixing them with ¼” bolts and lock nuts. The top collar was an exception since it had to slide up and down the shaft. The bottom collar was then attached to the other two ends of the seat support rods using a ¼” bolt and a lock nut. They were not overly tightened so as to allow for rotation. The top collar was attached to the rear seat bracket with a ¼” bolt and a lock nut as well. The support legs were attached to the leg assembly bracket via ¼” bolts and speed nuts (Fig. 87). 3/16” tension springs were press fit into the 3/16” holes on the tabs of the leg assembly bracket and acted as the stop pins.

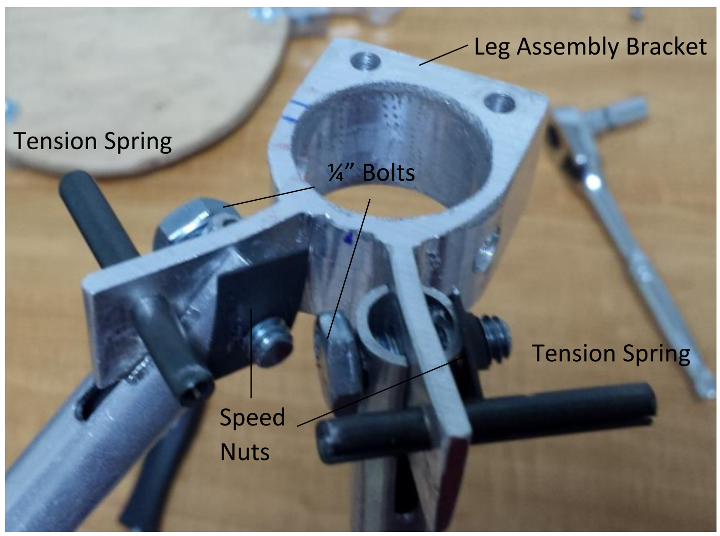

Figure 87: Leg Assembly

12.4 Forearm Cuff and Handle

The forearm cuff and handle were taken from an existing forearm crutch on the market. They were cut as one piece using a band saw. A telescoping tube from the crutch on the market was cut to a 4” length using a band saw. The 4” length was glued to the inside of our device so that approximately 2” stuck out the end. A ¼” hole was then drilled through both the small piece and the forearm cuff piece. A ¼” snap button was then inserted into the small 4” section to fit the holes (Fig. 88). Then the forearm cuff piece was fit to the snap button using its ¼” holes.

Figure 88: Handle/Cuff Assembly with Main Shaft

13.0 Results

At the end of the 4-term project, a prototype of the multi-purpose walking aid with an attached seat was created fulfilling the goal statement. Once a functional prototype was manufactured and assembled, the device was tested in order to determine if the device met the design specifications set out at the onset of the project. The major design specifications that were deemed most important for the first-generation prototype are discussed below.

The overall weight of the device was measured using a force gauge and some string. The device weighed 4.25 lbs. which met the design specification for a weight under 5 lbs. The weight of the device is very important for the user because the user lacks strength due to old age or another disability. Similar devices on the market weigh roughly 3-4 lbs. and the prototype is roughly 0.25 to 1 lb. heavier than these devices. The weight of the device could be brought down in subsequent prototypes, but for a first generation prototype 4.25 lbs. is good and meets the design specification.

The folding and unfolding operations for both the seat and the support legs were evaluated by 10 students. The students were asked to unfold and fold the seat and support legs and then evaluate the intuitiveness of the task on a 1 to 5 point scale (1 = not intuitive and 5 = very intuitive). The average rating for the folding and unfolding of the seat was 4, and the average rating for unfolding and folding the support legs was 4.8. These results suggest that the mechanisms for both the seat and support legs are user friendly and intuitive to operate.

Two additional design specifications that are important for the user are the adjustability of the hand grip height and the adjustability of the floor to seat height of the device. The hand grip height of the device can be adjusted be between 32” and 38”. This result is a good range for adjustability and allows users of different heights and different arm lengths to use the device comfortably as either a cane or forearm crutch. The seat height adjusts between 17” and 20” which is slightly smaller than the range of 17” to 22” that was in the design specifications. The reason for this decrease in range was due to an error during manufacturing and will be discussed in the next chapter.

The device is able to be completely adjusted and transformed using only hands and common hand tools. The support legs, main shaft, and forearm cuff can be adjusted using only hands. In addition the device can be transformed between a forearm crutch, a cane, and a seat with only the use of hands. If the user wants to take the seat and support legs off of the crutch/cane completely then they are able to do so with common hand tools (Figure 89).
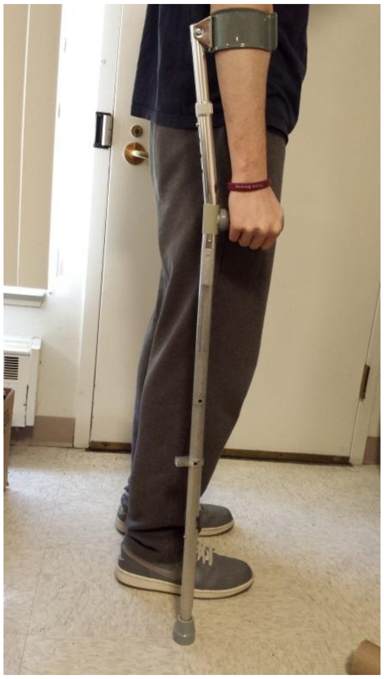
Figure 89: Device without Seat and Leg Support Attachments

The device was supposed to be tested for a load limit of 250 lbs. but the heaviest user that used the seat was a 205 lbs. team member (Figure 90). This means that the design specification for holding a 250 lb. user was not met, for reasons discussed in the next chapter.

Figure 90: Device Supporting Weight of Person

Table 15 lists each design specification and whether or not the prototype met the design specification. The comments/revisions column contains some brief notes on why a specification was not met or whether the device exceeded the expectation.

Table 15: List of Design Specifications and Whether They Were Met

Design Specification	Was design specification met?	Comments/Revisions
Device must weigh 5 lbs or less	Yes	Device weighed 4.25 lbs.
Seat must be foldable	Yes	
Seat must withstand 250 lbs	No	Device withstood up to 205 lb.
Device must be foldable	Yes	Device splits into two smaller sections for transporting
Device must adjust in height between 36” and 52”	No	Determined this was not critical due to ability to split into sections
Height of the device must not exceed 52”	No	Determined this was not critical due to ability to split into sections
Seat must be between 7-9” in diameter	Yes	Seat is 9” in diameter
The seat to floor height must adjust between 17” – 22”	No	Seat adjusts between 17” – 20”
Seat must fold/unfold in 5 or less steps	Yes	Seat unfolds/folds in one step
Simple, one-button releases must be used for adjusting	Yes	Snap buttons are used for all adjusting
Device must be useable indoors and outdoors	Yes	Device can be used indoors or outdoors
Device can be used in outdoor weather conditions except for slippery conditions	Yes	Device has rubber base caps that will grip surfaces in inclement weather
Device must have a seat that lies	No	Seat lies in base of support but

directly above the base of support		is not centered in BOS
Device must not have sharp edges	Yes	Device does not have sharp edges that could harm users
Device must not have pinch points	Yes	Folding mechanisms do not pose a pinching risk to users
Mechanism for folding seat must not pose risk to user during opening or folding of seat	Yes	Folding and unfolding of seat is controllable by user
Device will not need routine maintenance other than replacing base caps/tips	Yes	No components of the device need regular maintenance other than base caps
Device can be cleaned using multi-purpose cleaning spray	Yes	Device can be cleaned using multi-purpose cleaning spray
Seat on the device must be moisture resistant	No	Padding on the seat is comfortable but not moisture resistant
It would be nice for device to have replaceable hand grips	No	Hand grip was taken from existing forearm crutch
Replaceable parts can be replaced using only common household hand tools	Yes	Device can be modified and parts can be replaced with common hand tools
Device should use soft padding on hand grip and other contact points with body	No	Device uses anti-slip padding on hand grip which is not soft
Device must use anti-slip padding on hand grip	Yes	Hand grip was taken from existing forearm crutch with anti-slip padding
It would be nice for hand grip to be adjustable in angle for different users	No	Hand grip was taken from existing forearm crutch and was not adjustable

Materials must be easy to cut, weld, form, and machine	Yes	Device is mostly made from Al 6061 which is easily manufacturable
Materials must be resistant to corrosion	Yes	Al 6061 is corrosion resistant
Material hardware cost must be less than the budget of $480	Yes	The cost of the prototype was under $250

14.0 Discussion

The device was overall successful and satisfied most of the major design specifications. There were 27 design specifications and the prototype met 18 of these 27 design specifications. These design specifications ranged from specifications that the device must meet to specifications that would be nice to meet but were not critical to the success of the prototype. Most of the design specifications that were not met were specifications that would be nice to have but are not critical to the device functioning properly. Specifications such as soft padding for the hand grip, a replaceable hand grip, or the adjustable angle for a hand grip were not met for the first-generation prototype. These features are not necessary for the device to function successfully but could be added in future iterations.

The reason for not testing the maximum load limit was due to the safety concern about the device failing. Before formal testing of the device began with outside evaluators, the group members used the device to make sure it was functional. All of the group members and one of the advisors sat in the seat and confirmed that the device was functional. A problem arose when one of the group members used the device on a low friction tile floor. The support legs began to spread outwards under the weight of the user. The tabs on the support leg bracket and the support legs themselves had deformed due to the force. Up until this point each member had used the device on a higher friction surface (carpet) which kept the support legs from slipping and spreading outwards. Due to the fact that the bracket tabs and legs were deformed slightly, it was deemed unsafe to test for the 250 lb. limit or have outside users test the device.

Another important design specification that was not met was the seat height range of 17” to 22”. This specification was supposed to allow users of different heights to use the seat comfortably and safely. This range would make the device accessible for the 95% of potential users and would be a useful feature for the device. However, during assembly of the device the support leg bracket and the seat support collar were misaligned by a couple of degrees. This in turn caused the seat to not be horizontal to the ground as it should be. In order to use the seat, one support leg had to be adjusted to a longer length than the other. This makes the seat horizontal with the ground so that it can be used safely, but it cuts down on the range of adjustability for the seat height because one leg must stay longer than the other.

The design specifications dealing with ease of adjustability and the folding/unfolding of all components of the device were met and exceeded in some instances. The design specification for the folding of the seat was that the seat must fold in five or fewer steps, while the seat on the prototype unfolds/folds in one step. The hand grip adjusts between 32” and 38” which is a large range for a variety of users. The device adjusts with the use of snap buttons that are a common method of adjusting telescoping members on most canes or crutches on the market already.

A functional first generation prototype was successfully designed and manufactured that met a majority of the design specifications and almost all of the critical design specifications. Recommendations to accomplish all design specifications and future work to improve the prototype will be discussed in the chapter 16.

15.0 Conclusion

The project was successful in its goal of designing, manufacturing/assembling, and testing a prototype for a multi-purpose assistive mobility aid with a temporary seat. The device can be used effectively as a forearm crutch and as a cane. In addition, it can be used as a temporary seat should the user need it. The seat and support legs can be removed from the device to be used as a standard walking aid. The folding mechanisms for the seat and the support legs are intuitive and simple for a user to operate. The device is lightweight and made of materials that are durable and reliable.

This device is a first generation prototype and a proof of concept for the design of a multi-purpose walking aid with an attached seat. With a number of improvements, the device would have some advantages over the products already in the market. However, given that the device was a first generation prototype there are a number of changes that need to be made in order to have a finished and marketable product.

16.0 Recommendations

The first and most important change to the design would be strengthening the support leg bracket and the two support legs. The tabs extending from the support leg bracket need to be made thicker in order to prevent deformation. In addition, the wall thickness of the support legs must be thicker in order to further prevent any deformation of the legs during loading. These small changes in the design would prevent the deformation that occurred during the loading on low friction surfaces. Another addition that could be made to eliminate slipping further is foot caps for the support legs that provide more grip.

Another issue that arose during assembly of the device was slight misalignment of the collars on the main shaft. Although the collars were only misaligned by a few degrees, it was very noticeable in the seat not being level. In order to make the seat level, one of the support legs had to be adjusted to a longer length than the other. While this made the seat more horizontal and usable it also placed more force on the longer support leg and caused the base of support to be unsymmetrical. Making sure that all the collars are very precisely aligned during assembly of the device would alleviate all of these issues with the device. This misalignment was the cause of the decrease in the range of the seat height to only 17" – 20".

The overall functionality of the device could be improved by decreasing tolerances between the brackets on the seat, the collars, and the seat support rods. Most of these tolerances were specified in the original design but were altered due to errors during the manufacturing of certain parts. Decreasing these tolerances would make the operation of the seat smoother and more user-friendly.

Some additional work that could be accomplished includes improvements to the hand grip, the comfort for the user, and the aesthetics. The upper section of the prototype including the hand grip and forearm cuff was repurposed directly from an already existing forearm crutch. In the future this section could be designed and manufactured in order to allow for a replaceable, adjustable, and more comfortable or ergonomic hand grip. Making the device more comfortable overall could be accomplished by adding more padding to the seat and improving the ergonomics of the cuff and handle. The aesthetics of the device could be improved in a number of ways. Many of the pins are longer than necessary and could be shortened to make the device look less bulky. The seat has a slightly padded covering but could be improved by making a custom padded seat cover. In addition, the device could be painted or made a uniform color for aesthetic purposes. These items were viewed as less important for the first-generation prototype and were not included due to time constraints. These changes would make the user more comfortable and make the device more aesthetically pleasing and could be accomplished with further work on the prototype.

Bibliography

Kaye HS, Kang T, LaPlante MP. Mobility Device Use in the United States. Disability Statistics Report, (14). Washington, DC: U.S. Department of Education, National Institute on Disability and Rehabilitation Research, 2000.

Bateni H, Maki BE. Assistive devices for balance and mobility: Benefits, demands, and adverse consequences. Arch PhysMed Rehabil 2005;86:134–145.

Harrington, C., and S. Joines. "Assessing User Experience with Crutch Use: A Review of Literature." *Proceedings of the Human Factors and Ergonomics Society Annual Meeting* 55.1 (2011): 1658-662. Web. 13 Sept. 2014.

Samsonaite, Rimgaile. *Transformable Crutch*. Rep. Lund University, Industrial Design/LTH Department of
Design Sciences, 2008. Web. 12 Sept. 2014.

Vienna Medical (2006). Single Point Standard Cane. Retrieved 2014, from http://www.viennamedical.com/mm5/merchant.mvc?Store_Code=viennamedical&Screen=PROD2&Product_Code=cane-sgl-std&review=1#.VDlq1_ldV8E

Vienna Medical (2006). Lightweight Adjustable Folding Cane with T Handle. Retrieved 2014, from
http://www.viennamedical.com/p/10304JSB-1.html#.VDlssfldV8E

Vienna Medical (2006). Small Base Quad Cane with Foam Rubber Hand Grip. Retrieved 2014, from
http://www.viennamedical.com/p/10312FP-1.html#.VDlulfldV8E

Vienna Medical (2006). Folding Lightweight Adjustable Height Cane Seat. Retrieved 2014, from
http://www.viennamedical.com/p/10365.html#.VDlvEPldV8E

Vienna Medical (2006). Walking Crutches with Underarm Pad and Handgrip. Retrieved 2014, from
http://www.viennamedical.com/p/10401-1.html#.VDlzJvldV8E

Vienna Medical (2006). Heavy Duty Lightweight Bariatric Forearm Walking Crutches. Retrieved 2014, from http://www.viennamedical.com/p/10403HD.html#.VDlztvldV8E

Lee, Loren (n.d.). The CrutchSeat. Retrieved 2014, from http://crutchseat.com/index.html

Drive Medical (2014). Folding Lightweight Cane with Sling Style Seat. Retrieved 2014, from http://www.drivemedical.com/index.php/canesling-seat-460.html

Drive Medical (2014). Universal Folding Crutch. Retrieved 2014, from http://www.drivemedical.com/index.php/universal-aluminum-folding-underarm-crutch-475.html

IBISWorld. (2014). *Products and Markets-Medical Supplies Wholesaling*. Retrieved from IBISWorld:http://clients1.ibisworld.com/reports/us/industry/productsandmarkets.aspx?entid=930

IBISWorld. (2014). *Products and Markets-Occupational and Physical Therapists*. Retrieved from IBISWorld:http://clients1.ibisworld.com/reports/us/industry/productsandmarkets.aspx?entid=1562

IBISWorld. (2014). *Products and Markets-Online Medical Supplies Sales*. Retrieved from IBISWorld:http://clients1.ibisworld.com/reports/us/industry/productsandmarkets.aspx?entid=5092

smartCRUTCH (2012). SC Platform Crutch. Retrieved 2014, from http://www.smartcrutchusa.com/en/25-base-series-green.h

U.S. Department of Commerce. (1995). *Sixty-Five Plus in the United States*. Retrieved from US Census Bureau Statistical Brief: https://www.census.gov/population/socdemo/statbriefs/agebrief.html

Appendix A: Static Resultant Forces

Figure 91A: Full Seat Assembly

Table 16A: Resultant Forces on Seat Assembly

Center of Seat		Front of Seat		Side of Seat	
Back Bracket Pin	**Force (lb*F)**		**Force (lb*F)**		**Force (lb*F)**
X-force	0.01	X-force	-0.04	X-force	-89.40
Y-Force	-51.41	Y-Force	-98.26	Y-Force	-51.30
Z-Force	95.78	Z-Force	-44.79	Z-Force	95.81
X-Moment	0.00	X-Moment	0.00	X-Moment	0.00

Y-Moment	0.00	Y-Moment	0.00	Y-Moment	1.444e^-12
Z-Moment	0.00	Z-Moment	0.00	Z-Moment	1.241e^-10
Back Bracket					
X-force	0.00	X-force	0.00	X-force	-89.41
Y-Force	31.38	Y-Force	-101.16	Y-Force	31.44
Z-Force	104.08	Z-Force	37.81	Z-Force	104.03
X-Moment	0.00	X-Moment	0.00	X-Moment	201.02
Y-Moment	0.00	Y-Moment	0.00	Y-Moment	8.883e^-11
Z-Moment	0.00	Z-Moment	0.00	Z-Moment	172.76
Lower Support Pin From Front Bracket					
X-force	0.05	X-force	0.09	X-force	89.46
Y-Force	51.41	Y-Force	98.26	Y-Force	51.37
Z-Force	154.22	Z-Force	294.79	Z-Force	154.17
X-Moment	1.4494e^-5	X-Moment	7.25482e^-6	X-Moment	0.86
Y-Moment	-92.56	Y-Moment	-0.01	Y-Moment	-510.62
Z-Moment	0.02	Z-Moment	0.01	Z-Moment	510.62
Lower Support Pin From Support Rod 1					
X-force	-12.05	X-force	-23.03	X-force	-
Y-Force	-25.71	Y-Force	-49.14	Y-Force	-187.90
Z-Force	-77.11	Z-Force	-147.38	Z-Force	-205.05
X-Moment	-0.05	X-Moment	-0.11	X-Moment	-
Y-Moment	92.56	Y-Moment	176.94	Y-Moment	-
Z-Moment	-30.86	Z-Moment	-58.98	Z-Moment	-
Lower Support Pin From Support Rod 2					
X-force	12.00	X-force	22.94	X-force	-
Y-Force	-25.69	Y-Force	-49.12	Y-Force	136.53
Z-Force	-77.11	Z-Force	-147.41	Z-Force	50.89

X-Moment	0.05	X-Moment	0.11	X-Moment	-
Y-Moment	-92.56	Y-Moment	-176.93	Y-Moment	-
Z-Moment	30.85	Z-Moment	58.97	Z-Moment	-
Support Rod 1					
X-force	12.05	X-force	23.03	X-force	-
Y-Force	25.71	Y-Force	49.14	Y-Force	187.90
Z-Force	77.11	Z-Force	147.38	Z-Force	205.05
X-Moment	0.05	X-Moment	0.11	X-Moment	-
Y-Moment	-92.56	Y-Moment	-176.94	Y-Moment	-
Z-Moment	30.86	Z-Moment	58.98	Z-Moment	-
Support Rod 2					
X-force	-12.00	X-force	-22.94	X-force	-
Y-Force	25.69	Y-Force	49.12	Y-Force	-136.53
Z-Force	77.11	Z-Force	147.41	Z-Force	-50.89
X-Moment	-0.05	X-Moment	-0.11	X-Moment	-
Y-Moment	92.56	Y-Moment	176.93	Y-Moment	-
Z-Moment	-30.85	Z-Moment	-58.98	Z-Moment	-
Upper Support Pin 1					
X-force	12.05	X-force	23.04	X-force	-
Y-Force	25.70	Y-Force	49.13	Y-Force	106.04
Z-Force	77.11	Z-Force	147.39	Z-Force	227.59
X-Moment	0.00	X-Moment	0.00	X-Moment	-
Y-Moment	0.00	Y-Moment	0.00	Y-Moment	-
Z-Moment	0.00	Z-Moment	0.00	Z-Moment	-
Upper Support Pin 2					
X-force	-12.00	X-force	-22.94	X-force	-
Y-Force	25.70	Y-Force	49.14	Y-Force	-59.84

Z-Force	77.10	Z-Force	147.41	Z-Force	-73.27
X-Moment	0.00	X-Moment	0.00	X-Moment	-
Y-Moment	0.00	Y-Moment	0.00	Y-Moment	-
Z-Moment	0.00	Z-Moment	0.00	Z-Moment	-

Table 17A: Resultant Forces on Leg Assembly

Center of Seat		**Front of Seat**		**Side of Seat**	
Front Leg	**Force (lb*F)**		**Force (lb*F)**		**Force (lb*F)**
X-force	0.00	X-force	0.00	X-force	0.00
Y-Force	0.00	Y-Force	0.00	Y-Force	0.00
Z-Force	67.76	Z-Force	156.89	Z-Force	67.76
X-Moment	0.00	X-Moment	0.00	X-Moment	0.00
Y-Moment	0.00	Y-Moment	0.00	Y-Moment	-1125.00
Z-Moment	0.00	Z-Moment	0.00	Z-Moment	0.00
Support Leg 1					
X-force	0.00	X-force	0.00	X-force	0.00
Y-Force	0.00	Y-Force	0.00	Y-Force	0.00
Z-Force	91.12	Z-Force	46.56	Z-Force	91.12
X-Moment	0.00	X-Moment	0.00	X-Moment	0.00
Y-Moment	0.00	Y-Moment	0.00	Y-Moment	0.00
Z-Moment	0.00	Z-Moment	0.00	Z-Moment	0.00
Support Leg 2					
X-force	0.00	X-force	0.00	X-force	0.00
Y-Force	0.00	Y-Force	0.00	Y-Force	0.00
Z-Force	99.12	Z-Force	46.56	Z-Force	91.12
X-Moment	0.00	X-Moment	0.00	X-Moment	0.00
Y-Moment	0.00	Y-Moment	0.00	Y-Moment	0.00

Z-Moment	0.00	Z-Moment	0.00	Z-Moment	0.00
Leg Pin 1 from Support leg bracket					
X-force	-32.11	X-force	-16.41	X-force	-32.11
Y-Force	-89.38	Y-Force	-45.68	Y-Force	-89.37
Z-Force	12.08	Z-Force	6.17	Z-Force	12.08
X-Moment	0.00	X-Moment	0.00	X-Moment	0.00
Y-Moment	184.21	Y-Moment	94.12	Y-Moment	184.21
Z-Moment	-418.81	Z-Moment	-213.99	Z-Moment	-418.82
Leg Pin 2 from Support leg bracket					
X-force	-32.11	X-force	-16.41	X-force	-32.11
Y-Force	-89.37	Y-Force	-45.67	Y-Force	-89.38
Z-Force	12.08	Z-Force	6.17	Z-Force	12.08
X-Moment	0.00	X-Moment	0.00	X-Moment	0.00
Y-Moment	184.21	Y-Moment	94.12	Y-Moment	184.21
Z-Moment	418.81	Z-Moment	213.99	Z-Moment	418.82
Stop Pin 1					
X-force	-	X-force	-	X-force	-
Y-Force	-33.74	Y-Force	-17.24	Y-Force	-33.74
Z-Force	76.70	Z-Force	39.19	Z-Force	76.70
X-Moment	-	X-Moment	-	X-Moment	-
Y-Moment	-	Y-Moment	-	Y-Moment	-
Z-Moment	-	Z-Moment	-	Z-Moment	-
Stop Pin 2					
X-force	-	X-force	-	X-force	-
Y-Force	-33.74	Y-Force	-17.24	Y-Force	-33.74
Z-Force	76.70	Z-Force	39.19	Z-Force	76.70
X-Moment	-	X-Moment	-	X-Moment	-

Y-Moment	-	Y-Moment	-	Y-Moment	-
Z-Moment	-	Z-Moment	-	Z-Moment	-

Appendix B

The pins all exhibited double shear, therefore the equation to solve for shear stress is:

$$\frac{F/2}{A} \qquad \text{(B1)}$$

where F is the force on the pin and A is the cross-sectional area. The pins are all 0.25 inches in diameter. There are two component forces acting on the pins: Z and Y forces. The shear stress in both components was calculated and then the magnitude of those shear forces was taken. The equation for the magnitude is:

$$\sqrt{\tau_Y^2 + \tau_Z^2} \qquad \text{(B2)}$$

An example of the process is shown below where a pin exhibits forces in both the Y and Z directions (Fig. 92B)

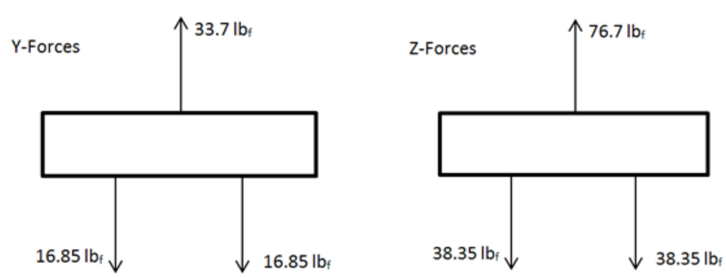

Figure 92B: Forces on Pin in Y and Z Directions

Equation 1 is used to solve for the shear stress in both the Y and Z directions:

$$\frac{33.7/2}{\frac{\pi}{4}(0.25^2)} = 343\,\frac{lb_f}{in^2}\ (Y)$$

$$\frac{76.7/2}{\frac{\pi}{4}(0.25^2)} = 781\,\frac{lb_f}{in^2}\ (Z)$$

Equation 2 is then used to find the resultant force:

$$\sqrt{343^2 + 781^2} = 853\ \frac{lb_f}{in^2}$$

The tables below show the calculated shear stresses in both the Y and Z directions and the magnitude of the resultant force for each of the pins in the three loading conditions.

Table 18B: Shear Stresses on Pins when Weight is at the Center of the Seat

Weight at Center of Seat			
Pin	Shear Stress in Y (psi)	Shear Stress in Z (psi)	Magnitude of Shear Stress (psi)
Upper Support Pin 1	261	785	827
Upper Support Pin 2	262	786	827
Lower Support Pin	524	1570	1660
Back Bracket Pin	524	976	1110
Leg Pin 1	910	123	919
Leg Pin 2	910	123	919
Stop Pin 1	343	781	853
Stop Pin 2	343	781	853

Table 19B: Shear Stresses on Pins when Weight is at the Front of the Seat

Weight at Front of Seat			
Pin	Shear Stress in Y (psi)	Shear Stress in Z (psi)	Magnitude of Shear Stress (psi)
Upper Support Pin 1	500	1500	1580
Upper Support Pin 2	500	1500	1580
Lower Support Pin	1000	3000	3160
Back Bracket Pin	1000	454	1010
Leg Pin 1	465	62.7	469
Leg Pin 2	454	62.7	469
Stop Pin 1	175	399	435
Stop Pin 2	175	399	435

Table 20B: Shear Stresses on Pins when Weight is at the Side of the Seat

Weight at Side of Seat			
Pin	Shear Stress in Y (psi)	Shear Stress in Z (psi)	Magnitude of Shear Stress (psi)
Upper Support Pin 1	1080	2320	2560
Upper Support Pin 2	609	746	962
Lower Support Pin	3810	4180	5650
Back Bracket Pin	523	976	1110
Leg Pin 1	910	123	918
Leg Pin 2	910	123	918
Stop Pin 1	343	781	853
Stop Pin 2	343	781	853