THE UNIVERSITY OF SYDNEY

DOCTORAL THESIS

Power system stability scanning and security assessment using machine learning

Author:
Ruidong LIU

Supervisor:
Dr. Gregor Verbič

A thesis submitted in fulfillment of the requirements for the degree of Doctor of Philosophy

in the

The Centre for Future Energy Networks
Electrical & Information Engineering

November 8, 2018

Declaration of Authorship

I, Ruidong LIU, declare that this thesis titled, "Power system stability scanning and security assessment using machine learning" and the work presented in it are my own. I confirm that:

- This work was done wholly or mainly while in candidature for a research degree at this University.
- Where any part of this thesis has previously been submitted for a degree or any other qualification at this University or any other institution, this has been clearly stated.
- Where I have consulted the published work of others, this is always clearly attributed.
- Where I have quoted from the work of others, the source is always given. With the exception of such quotations, this thesis is entirely my own work.
- I have acknowledged all main sources of help.
- Where the thesis is based on work done by myself jointly with others, I have made clear exactly what was done by others and what I have contributed myself.

Signed:

Date:

The University of Sydney

Abstract

Engineering & Information Technologies
Electrical & Information Engineering

Doctor of Philosophy

Power system stability scanning and security assessment using machine learning

by Ruidong LIU

Power systems are undergoing a major transformation driven by the increasing uptake of renewable energy sources, DC power transmission, and the decentralization of electric power supply, like rooftop PV, energy storage, home energy management systems, and electric vehicles. How future grids will look like, however, is still uncertain as the evolution depends not only on technological development but also on the regulatory environment.

Future grids planning thus requires a major departure from conventional power system planning, where only a handful of the most critical scenarios is analyzed. To account for a wide range of possible future evolutions, scenario analysis has been proposed in many industries. As opposed to the conventional power system planning, where the aim is to find an optimal transmission and/or generation expansion plan for an existing grid, the aim in future grids scenario analysis is to analyze possible evolution pathways to inform power system planning and policy making. Therefore, future grids' planning may involve large amount of scenarios and the existing planning tools may no longer suitable.

Other than the raised future grids' planning issues, operation of future grids using conventional tools is also challenged by the new features of future grids such as intermittent generation, demand response and fast responding power electronic plants which lead to much more diverse operation conditions compared to the existing networks. Among all operation issues, monitoring stability as well as security of a power system and action with deliberated preventive or remedial adjustment is of vital important. Online Dynamic Security Assessment (DSA) can evaluate security of a power system almost instantly when current or imminent operation conditions are supplied. DSA is proved to be more efficient than traditional extensive offline security studies and is widely utilized by utilities in power systems operation. However, given the new features of future grids, the existing dynamic security assessment tools also need to be examined and refurbished to suit future grids.

The focus of this dissertation are, for future grid planning, to develop a framework using Machine Learning (ML) to effectively assess the security of future grids by analyzing a large amount of the scenarios; for future grids operation, to propose approaches to address technique issues brought by future grids' diverse operation conditions using ML techniques. *Unsupervised learning*, *supervised learning* and *semi-supervised learning* techniques are utilized in a set of proposed planning and operation security assessment tools.

I was involved in an Australia Commonwealth Scientific and Industrial

Research Organisationa (CSIRO) project during my candidature and my contribution in this project is given in the first chapter of the dissertation. To the best of our knowledge, the Future Grid Research Program funded by the CSIRO, is the first to propose a comprehensive modeling framework for future grid scenario analysis. The project aims to provide a modeling framework for the future Australian electricity grid out to 2050 and also analyze power flow, stability, security and resilience to changing technologies beyond energy balancing. Diverse scenarios for levels and placement of renewable generation, different transmission and topologies, different load management strategies and storage technologies are considered. The second chapter includes scenarios design for future grids and transient stability assessment using time-domain simulation method based on power flow study of the scenarios. The study work carried out in the project showed very high computational burden of the conventional time-domain method and which leads to the research focus on machine learning methods to overcome the disadvantages of the existing methods in future grids planning.

One of the main contributions of the dissertation is a framework for fast stability scanning using ML for future power system planning. The ML techniques used in the third chapter (unsupervised learning) have been used in the past in many other power engineering applications [1, 2, 3, 4]. Implementing them directly to the problem of fast stability scanning, however, is infeasible because the number of operating conditions and the number of features required to describe an operating condition are much larger than in the existing applications. Unsupervised clustering technique is the first machine learning approach utilized in this dissertation to deal with future power system planning stability assessment.

DSA provides power system operators with security information of power systems for current or imminent operating conditions considering various system topologies and contingencies. The security information is basis for preventive or emergency control to prevent systems' insecurity.

Transient Stability Assessment (TSA) is one of the most important tasks in DSA. To account for the diverse operation topologies of future grids, in the fourth chapter a reliable and high accuracy TSA model (supervised learning) is proposed considering various system topologies. The innovation of this model are three-fold: (i) first, from feature selection algorithm aspect, a hybrid filter-wrapper feature selection method is proposed; (ii) then, from Intelligent System (IS) training algorithm aspect, a boosting learning algorithm

is used during IS training process; (iii) last, from stability decision-making algorithm aspect, an Extreme Learning Machine (ELM) [1] -based ensemble with a new decision making rule based on weighted outputs of ELMs is proposed to achieve 100% predictive accuracy.

The core of a TSA is called classifier which is able to give out straight away transient stability of a power system once an operating condition is fed. A key feature of a classifier is its generalization ability, which refers to the ability of the classifier to give reliable and accurate predictions using previously unseen operating conditions. The generalization ability depends on the classifier's structure, the learning algorithm used, the training set size and its quality [9]. In supervised learning, a training set consists of a group of operating conditions and the corresponding stability labels (security indexes in DSA). The labels are normally obtained using computationally expensive time-domain simulations.

To accommodate fast changing future grids' operation conditions, DSA classifier must be updated regularly to ensure its robustness, which requires generating new training samples and retraining. Clearly, evaluating a large amount of operating conditions in order to cover a wide range of diverse operating conditions in a training set quickly becomes computationally prohibitive. Reducing the number of samples in the training set is also not an option as this would reduce the classifier's generalization ability [9].

As presented in the fifth chapter, an alternative is to use *semi-supervised learning* [10], which uses both labeled and unlabeled operating conditions. In this dissertation, the last contribution is a new DSA framework based on a combination of semi-supervised learning and data editing. To improve the generalization ability of a classifier, a large number of unlabeled operating conditions are used, which can be computed efficiently by power flow study. As a result, the proposed DSA framework requires significantly less labeled operating conditions to achieve a high generalization ability which satisfies future grids' operation needs.

[1] The ELM used in [5, 6, 7] is essentially a randomized neural network with omission of bias, first proposed in [8].

Acknowledgements

I would like to express my deepest thanks to my supervisor, Dr. Gregor Verbič, for his tremendous academic guidance and encouragement throughout this research work. Thanks also go to Dr. Jin Ma for his help on publications and valuable academic suggestions.

I am also grateful to Professor David Hill for his guidance and support during my candidature in the Centre for Future Energy Networks. Special thanks go to the members of the Centre and Dr. Archie Chapman for their valuable suggestions and comments.

Finally, I wish to express my utmost gratitude to my parents, my dear wife and our kids for their care, support and love.. . .

Publications

Publications during my candidature and my contribution to each publication in percentage are given below.

R. Liu, G. Verbič and J. Ma, "A machine learning approach for fast future grid small-signal stability scanning," 2016 IEEE International Conference on Power System Technology (POWERCON), Wollongong, NSW, 2016, pp. 1-6.

Contributor	Modeling	Results Analysis	Paper writing
Ruidong Liu	90%	90%	80%
Others	10%	10%	20%

R. Liu, G. Verbič and Y. Xu, "A new reliability-driven intelligent system for power system dynamic security assessment," 2017 Australasian Universities Power Engineering Conference (AUPEC), Melbourne, VIC, 2017, pp. 1-6.

Contributor	Modeling	Results Analysis	Paper writing
Ruidong Liu	90%	90%	80%
Others	10%	10%	20%

R. Liu, G. Verbič, J. Ma and D. J. Hill, "Fast Stability Scanning for Future Grid Scenario Analysis," in IEEE Transactions on Power Systems, vol. 33, no. 1, pp. 514-524, Jan. 2018.

Contributor	Modeling	Results Analysis	Paper writing
Ruidong Liu	90%	90%	80%
Others	10%	10%	20%

R. Liu, G. Verbič and J. Ma, "A New Dynamic Security Assessment Framework Based on Semi-supervised Learning and Data Editing," Submitted to journal of Electric Power Systems Research, May 2018.

Contributor	Modeling	Results Analysis	Paper writing
Ruidong Liu	90%	90%	80%
Others	10%	10%	20%

H. Marzooghi, M. Gramroodi, A.S. Ahmadyar, R. Liu, G. Verbič, D. J. Hill "Scenario and Sensitivity Based Stability Analysis of the Australian Future Grid," Submitted to IEEE Transactions on Power Systems, 2018.

Contributor	**Modeling**	**Results Analysis**	**Paper writing**
Ruidong Liu	25%	25%	20%
Others	75%	75%	80%

Contents

List of Figures

List of Tables

List of Abbreviations

CSIRO	Commonwealth Scientific Industrial and Research Organisation
DSA	Dynamic Security Assessment
ML	Machine Learning
TSA	Transient Stability Assessment
IS	Intelligent System
AUPEC	Australasian Universities Power Engineering Conference
DAE	Differential Algebraic Equations
DG	Distributed Generation
PDF	Probabilistic Density Function
ELM	Extreme Learning Machine
ANN	Artificial Neural Network
SVM	Support Vector Machines
DT	Decision Tree
PMUs	Phasor Measurement Units
VMV	Voltage Magnitude Violation
TV	Thermal Limit Violation
VS	Voltage Stability
TS	Transient Stability
OCs	Operating Conditions
TEF	Transient Energy Function
CVM	Core Vector Machine
NEM	National Electricity Market
RES	Renewable Energy Source
FACTS	Flexible Alternating Current Transmission System
CST	Concentrating Solar Thermal
SH	Snowy Hydro
NSW	New South Wales
VIC	Victoria
QLD	Queensland
SA	South Australia
AEMO	Australian Energy Market Operator
AVR	Automatic Voltage Regulation

PSS	Power System Stabiliser
UC	Unit Commitment
PSAT	Powerflow and Short-Circut Analysis Tool
DSATools	Dynamic Security Assessment Software
SSS	Small Signal Stability
EEAC	Extended Equal Area Criteria
TSAT	Transient Security Assessment Tool
TSI	TS Index
VSAT	Voltage Security Analysis Tool
FS	Frequency Stability
RoCoF	Rate of Change of Frequency
NTNDP	National Transmission Network Development Plan
FiTs	Feed in Tariffs
BS	Battery System
IPBS	Integrated PV-battery Systems
SoC	State of Charge
WF	Wind Farms
PSO	Particle Swarm Optimization
SMSE	Sum of the Mean Squared Error
SDB	Stability Database
BP	Back-Propagation
SLFN	Feedforward Neural Network
SFFS	Sequential Floating Forward Selection
LRS	Plus-L and Minus-R Selection
PAC	Probably Approximately Correct learning
KNN	K-Nearest Neighbor

For All Members of My Family…

Chapter 1

Introduction

1.1 Background

1.1.1 History of Electricity

Electricity has been in use for a very long time - electric fish and eels were using it a long time before it was ever harnessed by humans. In the 18th century, Benjamin Franklin conducted an extensive famous research in electricity in which he flew a kite with a dampened string and attached a metal key to the string in order to route electricity from a thunderstorm. Michael Faraday made the generation of electricity a practical possibility. Michael Faraday, in 1831, created the world's first generator by moving copper coils through a magnetic field. The conceptual generator model was further refined by Thomas Edison years later. Edison's generator is the first in mankind history to power electric streetlights in New York City in 1881. The work of Edison, Tesla, Westinghouse and many other inventors and engineers in electrical engineering in the 20th century helped set the foundations for today, shaping electricity as an essential tool of modern life and a driving force for human societies development.

1.1.2 Electricity Networks Around the World

Nowadays, electricity networks on different continents cover vast areas and are normally interconnected to achieve reliability and economic operation.

The mainland North American electricity network consists with the Eastern Interconnection, the Western Interconnection, the Texas Interconnection, the Quebec Interconnection, and the Alaska Interconnection. The regions are

not directly connected or synchronized to each other, but there are HVDC interconnections connect all the regional networks. This immense North American network of power lines, generation facilities, and related communications systems is often referred to as "the world's largest machine" and supply electricity continuously to one of the world's most developed regions.

The interconnected network of Continental Europe is the largest synchronous electricity network in the world. the network is run by 43 electricity transmission system operators; supplies over 500 million customers in 36 countries, including most of the European Union. In 2016, 1136 GW of production capacity was connected to the grid in which 506 GW is contributed by renewable generation including hydro [11]. As the largest developing country, China's power industry is characterized by fast growth and an enormous installed base. In 2014, it had the largest installed electricity generation capacity in the world with 1505 GW and generated 5583 TWh [12, 13]. China also has the largest thermal power capacity, the largest hydropower capacity, the largest wind power capacity and the largest solar capacity in the world. Despite an expected rapid increase in installed capacity scheduled in 2014 for both wind and solar, and expected increase to 60 GW in nuclear by 2020, coal will still account between 65% and 75% of capacity in 2020 [14].

1.1.3 Electricity in Our Life

One hallmark of our modern societies is electricity usage and electricity is an essential element contributed to our economic development. Not to mention the developed countries, in recent years, people in many developing countries from India, China to many African countries have experienced rising living standards, as more people are able to access electricity to keep their home appliance working. Many devices facilitating our life and impacting a big portion of our living standard are powered by electricity. Computers, TVs, mobile phones, white goods such as washing machine, dishwashing machine which free us from daily work require electricity. Electricity is now a basic element of our life.

1.1.4 Reliable Electricity Supply

Our societies are heavily relying on the electricity and our day to day life and economy can be greatly affected if we cannot have a reliable electricity supply.

During a power blackout, traffic lights go off, creating chaos on the affected roads. Airports and railways cannot be properly operated. Communication system covering almost every corner of our societies are no longer functioning. People cannot find out what is happening around since many are relying on heavily internet to gain information. Factories and offices are shut down. One can imagine the vast impact of a large scale blackout on our life and the economy. The power outage during USA California's capacity crisis in 2000 affected 1.5 million people, had effects on California's GDP (it was cut by 0.7-1.5%) and are thought to have cost around $40 billion [15]. According to the Royal Academy of Engineers, the cost of an electricity shortfall in the UK would run into billions of pounds. In South Africa, power shortage has had devastating economic consequences too. Table 1.1 lists some notable wide-scale power outages around the world [16].

TABLE 1.1: Notable Power Outages

Events	People Affected	Location	Date
1	620 million	India	30/07/2012 31/07/2012
2	230 million	India	2/01/2001
3	150 million	Bangladesh	1/11/2014
4	140 million	Pakistan	26/01/2015
5	100 million	Indonesia	18/08/2005

1.2 Security Assessment in Planning and Operation.

To design and maintain a reliable power system is of important since our societies and economy are heavily relying on a continuous power supply. Power system reliability is therefore the overall objective in power system planning and operation.

1.2.1 Concepts of Security Assessment

The conceptual definition and relationship of reliability, security and stability are given below [17]:

Reliability of a power system refers to the probability of its satisfactory operation over the long run. It denotes the ability to supply adequate electric service on a nearly continuous basis, with few interruptions over an extended time period.

Security of a power system refers to the degree of risk in its ability to survive imminent disturbances (contingencies) without interruption of customer service. It relates to robustness of the system to imminent disturbances and, hence, depends on the system operating condition as well as the contingent probability of disturbances.

Stability of a power system, refers to the continuance of intact operation following a disturbance. It depends on the operating condition and the nature of the physical disturbance.

The essential differences among the three aspects of power system performance are also given in [17]:

- Reliability is the overall objective in power system design and operation. To be reliable, the power system must be secure most of the time. To be secure, the system must be stable but must also be secure against other contingencies that would not be classified as stability problems e.g., damage to equipment such as an explosive failure of a cable, fall of transmission towers due to ice loading or sabotage. As well, a system may be stable following a contingency, yet insecure due to post-fault system conditions resulting in equipment overloads or voltage violations.

- System security may be further distinguished from stability in terms of the resulting consequences. For example, two systems may both be stable with equal stability margins, but one may be relatively more secure because the consequences of instability are less severe.

- Security and stability are time-varying attributes which can be judged by studying the performance of the power system under a particular set of conditions. Reliability, on the other hand, is a function of the time-average performance of the power system; it can only be judged by consideration of the system's behavior over an appreciable period of time.

Reliability of a power system depends on proper system planning, operation and management and is the overall target. Security and stability assessment are required in power system planning and operation in order to achieve a higher reliability performance.

Security assessment includes two important components: static security analysis involves steady-state analysis of post-disturbance system conditions

to verify that no equipment ratings and voltage constraints are violated; dynamic security analysis involves examining different categories of system stability performances such as angle stability, voltage stability and frequency stability. Stability of a power system refers to the continuance of intact operation following a disturbance and is thus the most important integral component of system security assessment. Security assessment of power systems is crucial for both systems planning and systems operation.

1.2.2 Existing Techniques and Methods

Security analytical techniques are well developed for conventional power systems in the past decades; some typical studies are revisited including deterministic, probabilistic techniques and intelligent system techniques.

1.2.2.1 Time-domain Simulation

Time-domain simulation solves a large amount of Differential Algebraic Equations (DAE) representing the system under study by using integration methods in a step-by-step process for a transient time frame (usually up to 10 seconds after the disturbance). Simulation softwares check interested stability indexes in the integration process and signal when the indexes excess a certain limit, such as generators' angle difference in a network for transient stability study. Conventionally, in power systems planning and operation security assessment, only limited number of scenarios and contingencies are investigated to ensure expansion of the system or a particular operation condition does not jeopardize the system security. Thus, time-domain simulation is widely used as an offline application since long simulation time is not yet an issue.

In order to assess power systems security in a fast manner, many other methods including deterministic and probabilistic techniques have been well studied and implemented in power system's planning and operation in the past decades. Compared to the time-domain simulation, these techniques are much faster and therefore can be used in power systems operation for on-line security assessment. This section revisits some of the major techniques which have been published.

1.2.2.2 Deterministic Techniques

Stability analysis is one of the cores involved in power system security assessment, the area covers steady-state and dynamic stabilities. Voltage stability is widely accepted as both steady-state and dynamic phenomenon. The angle stability is studied under small disturbances or large disturbances, correspond to damping/oscillation study and transient study. Frequency stability is another aspect of the power system stability issue which might draw more attention due to much less inertia in the future grid. Traditionally and has been widely used approach in stability studies is so called deterministic method, which requires a specific power system configuration, fixed parameter sets and predefined disturbances.

In 2004, a definition and classification of power system stability report is published by IEEE/CIGRE Joint Task Force on Stability Terms and Definitions [17]. This report addresses the issue of stability definition and classification in power systems from a fundamental viewpoint and closely examines the practical ramifications. Fig. 1.1 gives the overall picture of the power system stability problem, identifying its categories and subcategories.

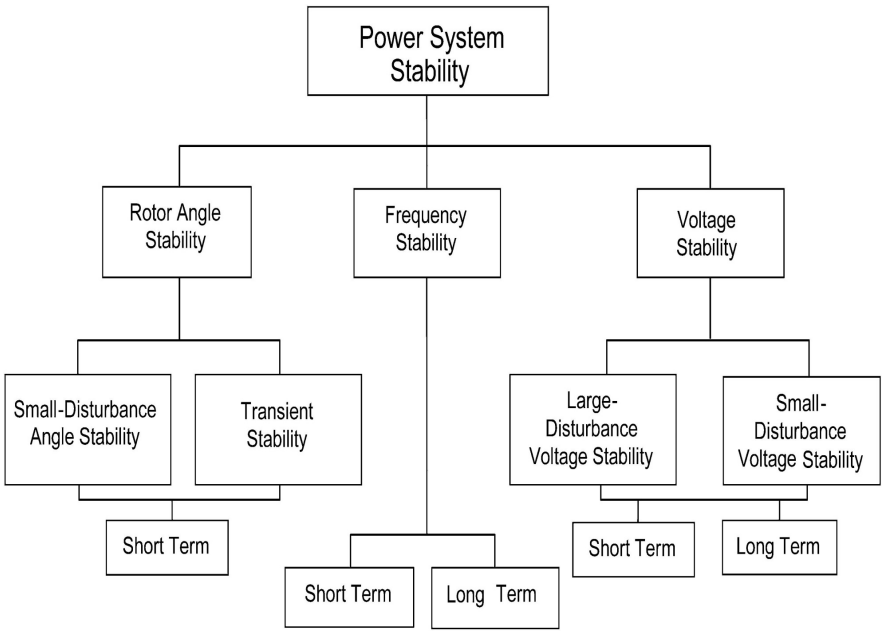

FIGURE 1.1: Stability Classification.

Voltage Stability Analysis

Voltage stability refers to the ability of a power system to maintain steady voltages at all buses in the system after being subjected to a disturbance from a given initial operating condition [17].

Voltage stability concerns are not new and in the past decades, researchers have developed different approaches to investigate if a system is near or close to voltage instability, these approaches can be classified into dynamic and steady state analysis.

Among those voltage steady-state stability analysis methods, there is one so called voltage collapse proximity indicator method. Based on the power flow Jacobian and measures of singularity, different indices in terms of power flow solutions have been developed. The singular value method is based on calculating the reduced Jacobian matrix minimum singular value, which gives indices to voltage stability proximity. The singular value method is regarded by some researchers to reflect Jacobian singularity of the power system better [18, 19].

In [18], the authors presented a fast method to compute the minimum singular value of a power flow Jacobian matrix, together with the corresponding right and left singular vectors. The method presented is based on consideration of amplification in direction defined by the singular vectors. The performed case studies results show that the minimum singular value of the power flow Jacobian and its sub-matrix are good indicator s of the proximity to the static voltage stability limit. The right singular vector corresponds to sensitive voltages (angles) and the left singular vector indicates the most sensitive directions for changes of active and reactive power injections [18].

Another method is linear sensitivity analysis, which is based on load-flow linear first-order sensitivities. By using them, it is straightforward to determine what changes in parameters (control variables) would be most effective to produce desired changes in dependent variables (state variables) of the power system [20].

Simulation approach is another important tool to analyse steady-state voltage stability issue. Conventional methods used for voltage stability assessment are the PV and QV curves and the modal analysis technique [21]. The V-Q curves analysis was developed from the difficulties of convergence of power flow program for cases stressed near the maximum power transfer on a path [22]. Other than the aforementioned methods, so-called direct methods for finding voltage collapse points in the power system have been developed and can be used as an alternative for the singular value method.

Voltage stability assessment in power system also uses Decision Tree Technique [23] and Artificial Intelligence techniques like Fuzzy networks [24] and Artificial Neural Networks [25].

Computational efficiency (speed) is the key element for online stability monitoring. This can be achieved through increasing the power of computational devices or by using different stability indices to reduce computational complexity.

Damping Analysis

Small-disturbance (or small-signal) rotor angle stability is concerned with the ability of the power system to maintain synchronism under small disturbances. The disturbances are considered to be sufficiently small that linearisation of system equations is permissible for purposes of analysis [17].

Conventionally time domain simulation and eigenvalue analysis of linearised system models are widely used to evaluate the small signal stability of power systems[26]. These methods have been used for decades. Other than the numerical simulation and eigenvalues analysis approach, there are small signal stability region method [27], non-linear analysis method [28] and probabilistic approach [29]. The eigenvalue method is based on Lyapunov's first method, and includes QR methods [30] and partial eigenvalue method [31].

Although the traditional eigenvalue analysis of the state matrix A which is derived from linearisation around an operating point of the differential algebraic equations had been widely performed on power systems since the 1960's, application of bifurcation theory to power system stability analysis was started in the 1990's [32]. From the point of view of bifurcation theory, local bifurcations and hence system stability are studied through the determination of a series of system eigenvalues associated with the gradual evolution of certain system parameters (e.g., demand changes) [33]. Local bifurcations having a significant effect on the stability of the system and most studied in the literature are the saddle-node (one of the eigenvalues becomes zero) and the Hopf bifurcations (a pair of complex eigenvalues cross the imaginary axes of the complex plane).

Probabilistic analysis method has also been studied which is discussed later in this proposal.

Frequency Stability Analysis

Frequency stability refers to the ability of a power system to maintain steady frequency following a severe system upset resulting in a significant

imbalance between generation and load [17]. Frequency stability issue is not involved in this research work.

Transient Stability Analysis

Large-disturbance rotor angle stability or transient stability, as it is commonly referred to, is concerned with the ability of the power system to maintain synchronism when subjected to a severe disturbance, such as a short circuit on a transmission line. [17].

Transient stability analysis conducted by power system planning and operation engineers to evaluate the response of the system to various severe disturbances. It has been in practice to investigate transient stability by numerical simulation in utility planning. But the numerical integration method requires intensive and time-consuming computational effort and traditionally precluded from online security analysis. This necessitated the development of fast simulation and direct methods of transient stability analysis which is mostly based on Lyapunov second method [26].

Direct methods was likely first proposed by Magnusson [34] in the late 1940's, and pursued in the 1950's by Aylett [35], and in the 1960's by El-Abiad and Nagappan [36]. In contrast to the time-domain approach, direct methods determine system stability directly based on energy functions. These methods determine whether or not the system will remain stable once the fault is cleared by comparing the system energy (when the fault is cleared) to a critical energy value.

Although direct stability methods have been in use since 1960's, methods featuring energy functions have been the more preferred ones. However, direct methods must overcome several challenges (modeling, function and reliability) and limitations (scenario, condition and accuracy) before they can become a widely accepted practical tool [37].

In [38], the authors offered a systematic procedure of constructing energy functions for both network-reduction and network-preserving power system models. An advanced method, called the BCU method, of computing the controlling unstable equilibrium point is presented along with its theoretical foundation. Numerical solution algorithms capable of supporting online applications of direct methods are provided. Practical demonstrations of using direct methods and the BCU method for online transient stability assessments on two power systems are described. Another important direct method called Extended Equal Area Criterion is widely used in commercial power system study software [39].

1.2.2.3 Probabilistic Techniques

In contrast to those above revisited deterministic analysis approaches which are widely used by researchers and power engineers in planning and operation security assessment work, probabilistic approaches provide an alternative to study varies stability issues in power system. Deterministic methods, which require a specific power system configuration, fixed parameter sets and predefined disturbances. However the configuration of the network after contingencies is unpredictable, the system parameters are not constant but vary around rated values slightly, the intermittent output of RES generators and the contingencies themselves are also unpredictable, etc. To investigate the security level of a power system thoroughly, one needs to consider all possible scenarios, which are the combination of the aforementioned uncertainties. Even with different direct analytical methods, it's still quite difficult or impossible to investigate the massive scenarios, not even mention the much more time consuming but more accurate and reliable simulation method.

The subject of planning and reliability measures is moving away from deterministic criteria toward hybrid deterministic-probabilistic planning methods to provide a quantified risk assessment using performance indices which are sensitive to factors that affect reliability [40].

In [41], the authors applied Two Point Estimate Method in static voltage probabilistic stability analysis, utilized power margin to calculate the stability probability without construction of complex relationship between the variables and the stability index. This avoids model reduction approach which is used in analytical studies. Much less simulation work is required to find the statistical stability profile of the voltage. The research only focused on the uncertainties of generation and demand.

In [42], the authors performed large amount of time-domain simulation to investigate the impact of possible installed Distributed Generation (DG) in distribution network on the voltage profiles of the system. The simulation is based on a model which allocated the DGs in a probabilistic fashion to account for the uncertainties of future installations. In this paper, the Gibbs sampler algorithm is used to generate three key parameters for the allocation of the non-deterministic DGs: type, size, and location. The Gibbs sampler algorithm is one of the Markov Chain Monte Carlo methods.

In [29], the authors proposed an analytical method of probabilistic analysis to investigate the impact of stochastic uncertainty of grid-connected wind generation on power system small-signal stability. The method can directly

calculate the Probabilistic Density Function (PDF) of critical eigenvalues of a large-scale power system from the PDF of wind power generation. It is shown that the stochastic variation of grid-connected wind generation can cause the system to lose stability even though the system is stable deterministically.

In [43], the authors discussed the impact of uncertain power injections in the grid on the load margin. Two common analysis of voltage stability: closest saddle node bifurcation and prefixed direction of load and production increase are covered in the paper. The loading margin is interpreted as a stochastic variable itself, this allows to interpret load margins at different levels of probability of voltage collapse with or without corrective actions undertaken. The probabilistic margin is assessed with a minimum number of samples by use of a stochastic response surface method implementation.

Above mentioned studies justified the advantages of probabilistic analysis in the future grid security studies. Both indirect (simulation) and direct (analytical) methods are proved to be successful in voltage and small signal stability assessment. The advantage of calculation speed of direct methods and accuracy of indirect methods can be combined to achieve the target of online security assessment for the future grid.

1.2.2.4 Intelligent System Techniques

Other than the above mentioned techniques, intelligent systems are also used in power system security assessment to overcome disadvantages of the conventional techniques, such as time-domain simulation method. Time-domain simulation is an accurate, flexible, and reliable security assessment method. However, since the early '90s, the power industry has drastically changed. Open power markets, renewable energy, and the current shift towards Smart-Grids significantly complicate the planning and operating systems. In power systems operation, conventional practice based on offline studies is inadequate and costly.

In power systems operation, as summarized in [44], reasons to shift from offline to on-line security assessment are as follows:

- Offline methods tend to be conservative when determining the available power-transfer ability, and this results in added cost.
- Electricity load growth outpaces the growth of the infrastructure, pushing the system to operate closer to its stability boundary.

- Market activity drives the system into an unpredictable, erratic power transfer pattern.
- The offline method can't capture the realistic operating conditions of renewable energy (particularly wind and solar power), and the system becomes unreliable.

An alternative to achieve fast and reliable power system security assessment is the intelligent system. As summarized in [45], *There are significant opportunities for the introduction of intelligent systems for use in on-line DSA. Many on-line DSA systems in use today may be referred to as deterministic systems since they rely largely on enumerated analytical solutions.*

An intelligent system is a computer-based system that can represent, reason about, and interpret data. In doing so it can learn about the structure of the data, analyze the data to extract patterns and meaning, derive new information, and identify strategies and behaviors to act on the results of its analysis. Intelligent systems come in many forms and have many applications, from processing huge data sets to controlling robots and drones. Machine learning is one of many application of IS based around the idea that a machine - computer based - can learn from large amount of data to extract desired information by itself.

Contrast to deterministic or probabilistic techniques which aim to construct a mathematical relationship between a given power system condition (with interested disturbance applied) and the system security status, an IS can be used to map the same condition to the security status straightaway when it is properly trained before hand.

Intelligent systems are seen to have four features which can bring benefits to the real-time environment,

- Intelligent systems can be very fast. Although distributed computation is now commonplace, full simulation methods require minutes of time to reach a conclusion. For large power systems in which many contingencies must be assessed, even with multiple-CPU computing, this time may be of concern and for on-line analysis, time is critical; particularly if a system is entering an insecure state and decisions must be made quickly.
- Intelligent systems are learning systems. Deterministic systems will conduct the same computations every cycle even if some of the calculations could be deemed inconsequential or if conditions arise rendering

the computations less accurate. IS systems have the ability to establish if a system condition has been seen previously and predict the solution accordingly.

- Intelligent system can provide a high degree of discovery. Discovery refers to the ability to uncover salient, but previously unknown, characteristics of, or relationships in, a system.

- Intelligent systems have the ability to synthesize large volumes of data into manageable and meaningful information. Considering the potentially massive volume of data provided from system measurements and simulation results, the ability to sift through such data and "collate" the useful results is critical for DSA systems.

Many works have been published using IS for on-line power system security assessment.

In [46], the authors provided a broad overview of online power system security analysis, with the intent of identifying areas needing additional research and development. Major components which are involved in the security analysis are identified, including data preparation (measurements, filtering, state estimation), online load flow study, contingency selection and security evaluation. Within the paper, data estimation and contingency analysis are discussed in detail, also optimization of preventive and corrective actions are covered. The procedure and approaches to carry out dynamic stability assessment is provided. The study indicated that artificial intelligence or expert systems have proven to be appropriate solutions to other power system operations problems and speculated that these technologies will play a major role in dynamic stability assessment. The paper also briefly discussed pattern recognition methods and probabilistic methods likelihood application in dynamic security assessment in the areas of contingency screening and in quantifying the probability of the next state of the system. The study gives clear scope related to online security assessment, the key issues need to be tackled and procedures traditionally been used.

In [44], the authors provided an overview of possibility and advantages of application of IS in online stability assessment. The key factors involved in implementation and a typical structure of an intelligent stability assessment system is proposed. The procedure starts from data preparation, selection of input and output, significant features and learning algorithm are also discussed. Considering high uncertainty of parameters involved in future grids

security assessment, Monte Carlo simulation approach is also used by the authors.

In [47], the authors developed an intelligent framework for real-time DSA of power systems with large penetration of wind power. The framework consists four major components, a DSA engine whose role is to perform real-time DSA of the power system, a wind power and load demand forecasting engine for offline and online predicting wind power generation and electricity load demand, a database generation engine for generating instances to train the DSA engine, and a model updating engine for online updating the DSA engine. In the paper, the authors used an algorithm called extreme learning machine to overcome inadequacy of other soft computing approaches such as Artificial Neural Network (ANN), Support Vector Machines (SVM), Decision Tree (DT), Fuzzy rule and data mining.

Decision tree is one of the most popular ISs used for TSA [48, 49].

Authors in [48] proposed an online dynamic security assessment scheme for large-scale interconnected power systems using phasor measurements and decision trees. The scheme builds and periodically updates decision trees offline to decide critical attributes as security indicators. The scheme uses a new classification method involving each whole path of a decision tree instead of only classification results at terminal nodes to provide more reliable security assessment results for changes in system conditions.

In [49], authors used Phasor Measurement Units (PMUs) and decision trees to develop a real-time security assessment tool to assess four important post-contingency security issues, including Voltage Magnitude Violation (VMV), Thermal Limit Violation (TV), Voltage Stability (VS) and Transient Stability (TS). The proposed scheme is tested on a real power system represented by a series of Operating Conditions (OCs) during a representative day. Robustness tests for the offline trained DTs are performed on a group of changed OCs that were not included for training the DTs and the idea of tuning critical system attributes for preventive controls is also presented to improve system security.

Support Vector Machine (SVM) is another popular tool used by researchers [50, 51]. In [50], authors present a novel approach to enable frequent computational cycles in online dynamic security assessment by using the terms of the Transient Energy Function (TEF) as input features to a machine learning algorithm (support vector machine is used). The aim is to train a single classifier that is capable of classifying stable and unstable operating points independent of the contingency. The network is trained based on the current

system topology and the loading conditions. It is shown that the classifier can be trained using a small set of data when the terms of the TEF are used as input features.

In [51], online power system TSA problem is mapped as a two-class classification problem - offline training and online application - and a novel data mining algorithm using the Core Vector Machine (CVM) is proposed to solve the problem based on PMU big data. Compared with other Support Vector Machines, the proposed CVM based assessment algorithm has higher precision and the least time consumption and space complexity.

Authors in [5, 6, 7] used the ELM algorithm for pre-fault and post-fault online TSA.

DSA application of the ELM algorithm proposed in [5] has shown to have faster learning speed compared to other ISs. In the paper, a new transient stability assessment model using the increasingly prevalent extreme learning machine theory is developed. It has significantly improved the learning speed and can enable effective on-line updating. The proposed model is compared with some state-of-the-art methods in terms of computation time and prediction accuracy. The simulation results show that the proposed model possesses significant superior computation speed and competitively high accuracy.

A TSA model using an ELM-based ensemble in [6] is proposed by authors. The model is developed for real-time dynamic security assessment of power systems. The IS structures a series of extreme learning machines and generalizes the randomness of single ELMs during the training. The proposed model learns and works very fast and can estimate the credibility of its DSA results, allowing an accurate and reliable pre-fault DSA mechanism: credible results can be directly adopted while incredible results are decided by alternative tools such as time-domain simulation. This makes the IS promising for practical application since the potential unreliable results can be eliminated for use. Case studies considering classification and prediction are, respectively, conducted on an IEEE 50-machine system and a dynamic equivalent system of a real-world large power grid.

In study of post-fault TSA, authors in [7] used an ELM-based ensemble and proposed a new decision-making rule. The case study demonstrated feasibility of the ELM application for post-fault TSA, which requires faster learning speed than pre-fault TSA applications. This paper develops a novel IS to balance the post-fault TSA response speed and accuracy requirements. A set of classifiers are sequentially organised, each is an ensemble of extreme

learning machines. A self-adaptive TSA decision-making mechanism is designed to progressively adjust the response time.

1.3 Challenges in Future Grids Planing and Operation

Power systems are undergoing a major transformation driven by the increasing uptake of renewable energy sources, DC power transmission, and the decentralization of electric power supply, like rooftop PV, energy storage, home energy management systems, and electric vehicles. Renewable generators and smart grid associated techniques are shaping the big networks around the globe.

We interpret future grids to be any grid type structures with the above-mentioned transformational changes which are significantly different to the existing power systems.

Our power system planning and operation engineers are challenged by technical issues they haven't seen. The new features of our power system brought by distributed generation, electric vehicles, utility scale storage, a large amount of power electronics application and participation of end users in system operation should be addressed to ensure a sustainable and reliable future power system.

How future grids will look like, however, is still uncertain as the evolution depends not only on technological development but also on the regulatory environment. The future grid planning aim is to find an optimal transmission and/or generation expansion plan for an existing grid, the aim in future grids scenario analysis is to analyze possible evolution pathways to inform power system planning and policy making. Therefore, future grids' planning may involve large amount of scenarios and the existing planning tools may no longer suitable.

Other than the raised future grids' planning issues, operation of future grids using conventional tools is also challenged by the new features of future grids such as intermittent generation, demand response and fast responding power electronic plants which lead to much more diverse operation conditions compared to the existing networks. Among all operation issues, monitoring stability as well as security of a power system and action

with deliberated preventive or remedial adjustment is of vital important. On-line dynamic security assessment can evaluate security of a power system almost instantly when current or imminent operation conditions are supplied. DSA is proved to be more efficient than traditional extensive off-line security studies and is widely utilized by utilities in power systems operation. However, given the new features of future grids, the existing dynamic security assessment tools also need to be examined and refurbished to suit future grids.

1.4 Recent Studies on Modeling of Future Grids

So far, power system planners and operators have, in general, well managed security issues of the existing power systems. However, our power systems are undergoing a revolution as a result of emerging renewable energy sources, more flexible networks and new load profiles. How to handle the new challenges of our future grids in planning and operation security assessment is a key to have reliable future grids.

A proper mathematical model of a power system which is closest to its physical network is vital when analyzing the real world system by using the model. As discussed previously, many new features which are not part of our existing power systems will be playing important roles in future grids and capture these new features in a power system model for planning or operation security assessment is the first important step. Many studies have been carried out recently on future grids modeling and some are given in the following subsection.

The future grid test bed for this research is of fundamental and the first task to be completed. Though the results of this research work is not case specified, but can apply to any future grids, a test bed is required to carry out necessary simulation works. In [37], the authors concluded that there is no international research so far has developed a standardized comprehensive modeling framework for future grids which closes to the modeling framework for classical systems: a suite of definitions, equations and software for power flow, stability analysis, dispatch, security and reliability. Also even some well-known modern power system study software have included new features to cover renewables, however, deficiencies remain in the capability to represent completely the features of future grids in the long-term.

A few published future grid models analysed by the authors [52, 53, 54, 55], the conclusion is that those models all have pros and cons as explained in the next a few paragraphs.

The first model proposed in [52] - Australian Energy Market Operator (AEMO)'s 100 percent renewables study, four scenarios are considered distinguished by the development of renewable generation technologies and the demand projection. The focuses are again on economic analysis and balance. In [53] is called Future Zero-carbon Electrical Grid of Australia (ZCA) in 2020. In this model renewable generation, fixed distributed storage and mobile storage (Electric Vehicles) are considered. However the study focused only on economic aspects and selection of the wind and solar sites with the highest probability of wind speed and solar radiation. Moreover the study didn't cover the grid performance, stability and security assessment.

In [54], the authors produced simulations of scenarios with 100 per cent RE considering a copper plate model for the National Electricity Market (NEM). This model study ignored the core of the future grid – network, but only concentrated on generation–demand balance. In [55], the researchers tried to determine the least cost mix of wind, solar, geothermal, gas and hydro generations for California in 2050. The generation mix includes dis-patchable hydro, pumped hydro, natural gas, geothermal, and centralized solar thermal with storage. The research conclusion is based on balancing and hourly-time domain simulations. Again stability is not considered. Regarding the role played by the storage in future grid, the authors of reference [56, 57, 58] have tried different ways to evaluate the cost, performance of the grid with different scale of storage systems are embedded.

From the above studies, the researchers mostly focused on to evaluate the feasibility of RES generation to balance the future projected demand. The overall performances of the grid were not addressed. Most of the studies are based on a final stage of the evolution of the grid, thus the performances of the grid during transition are not studied. However it's obvious that the transition from the classical to so called future grid will take at least decades depending on policy, economical condition and technical development. Another major concern is that all of the above studies have used conventional load models and neglected DR. In the long-term it can be expected that DR will play a major role alongside storage and so affect the result of power system studies significantly [37].

1.5 Focus of the Presented Work

In this research work, a set of comprehensive new future grid security assessment tools are proposed from security assessment in future grids planning and operation point of view.

As mentioned in the previous sections, time-domain simulation is widely used for power system planning since only limited number of critical scenarios and contingencies need to be investigated. And if those scenarios and contingencies are secure then the system under study is regarded as secure. However, the greater complexity of future grids goes way beyond just dimensional scale. This will require new tools such as for scanning large numbers of network scenarios.

On the other hand, the new features of future grids impose more diverse and fast changing operating conditions on existing online security assessment tools, such as the widely used Online Dynamic Security Assessment systems. Investigation is needed to evaluate performance of conventional existing online security assessment tools and new tools need to be developed for future grids operation.

The focus of this dissertation are, for future grid planning, to develop a framework using machine learning to effectively assess the security of future grids by fast analyzing a large amount of the scenarios; for future grids operation, to propose new ML based DSA approaches to address technique issues brought by future grids' diverse and fast changing operation conditions. *Unsupervised learning*, *supervised learning* and *semi-supervised learning* techniques are utilized in a set of proposed planning and operation security assessment tools.

One of the major research aims is to propose a framework to assess the security of future grids for planning purpose by analyzing large amount of the scenarios, considering the new features which are not part of the present system. The inherent intermittent production of Renewable Energy Source (RES), inertia less, fast transition of system structure and diverse load flow pattern, inverter dominated and new employed control schemes will greatly affect the way to analyze security of the future grid. Another major aim is to develop new IS based DSA tools, therefore to give the future grid operators awareness of potential stability issues in a faster and more accurate way. The aims of this research work are listed below:

- Design planning study scenarios of a future grid for a CSIRO project.

- Conduct transient stability study of the designed scenarios using time-domain simulation method and analysis transient stability of the grid affected by different new features.
- Propose an IS (unsupervised learning) based framework to perform fast scanning of a large amount of scenarios for future grid planning. (Market model is included in the framework.)
- Conduct fast scanning of small signal stability and voltage stability margin using the proposed method.
- Propose an IS (supervised learning) based DSA tool to tackle reliability and accuracy issues caused by topology change and renewable generation penetration in future grids.
- Propose an IS (semi-supervised learning) based DSA tool to tackle security assessment speed and accuracy issues caused by renewable generation penetration in future grids.

1.6 Structure of the Thesis

Other than the introduction chapter, the thesis has another 5 chapters. During the period of candidature, works are carried out on power system security assessment by conventional and state-of-the-art techniques. Innovative approaches are proposed in chapters 3 to 5 and papers based on these innovation are published.

In the second chapter, a CSIRO project focused on developing a future grid model and scenarios for the security assessment of the future grid is given. Scenario development will be discussed. Time-domain simulation method is applied in the project evaluating transient stability performance. The simulation considered 18 scenarios and hourly operating conditions are evaluated over typical months.

A large number of scenarios are evaluated using time-domain simulation in future grids planning and simulation burden is unmanageable even for offline application. The third chapter presents a novel unsupervised learning algorithm based fast scanning tool. Small signal stability and voltage stability margin are evaluated for a future grid model based on the IEEE 14-generator benchmark network system.

New features of future grids such as intermittent renewable generation, demand response, utility scale storage, etc. challenges the existing IS based

DSA tools. The fourth chapter evaluate the performance of a conventional IS based DSA tool and propose novel techniques to overcome the reliability and accuracy issues if traditional supervised learning algorithm is used in a DSA tool.

To achieve fast security assessment and high accuracy in future grids operation, a novel semi-supervised learning algorithm based DSA model is proposed in the fifth chapter. Semi-supervised learning algorithm uses both labeled and unlabeled operating conditions in the IS training process and significantly reduced time-domain simulation required to prepare training data for the DSA.

The last chapter concludes the thesis by revisiting key achievements presented in previous chapters and identify possible future works in developing tools for future grids security assessment in both planning and operation.

1.7 Methodology

Conventional time-domain simulation method is used in the CSIRO future grid project security assessment work. A large amount of scenarios need to be assessed and which leads to heavy computational burden. To overcome the issue, the first research target is to develop a framework for fast scanning of future grids security, thus to have an overview of a future grid security performance from the planning point of view. A novel ML based security scanning tool for future grids planning is proposed. Further, future grids operation conditions are more diverse than existing networks and which jeopardizes reliability and accuracy of conventional IS based DSA tools. The second research target is to propose novel ML based DSA tools for future grids on-line security assessment. The methodologies are adopted to carry out the research work are provided:

There are different ways to define the types of machine learning algorithms but commonly the algorithms can be divided into categories according to their purpose. The main categories are unsupervised Learning, supervised learning, semi-supervised Learning and reinforcement Learning.

- To achieve fast scanning of security performance of the future grid scenarios, unsupervised machine learning algorithm is considered. The algorithm is mainly used in pattern detection and descriptive modeling. However, there are no output categories or labels here based on which the algorithm can try to model relationships. Clustering algorithm will be used to categories large number of operating conditions

and only 'typical' operating conditions are evaluated by time-domain simulation. Feature selection is required to pick best features for operating condition clustering.

- For future grids on-line security assessment, supervised machine learning algorithm is considered since the algorithm is more accurate than the unsupervised algorithm when evaluate imminent operating conditions. Supervised learning algorithms try to model relationships and dependencies between the target prediction output and the input features such that we can predict the output values for new data based on those relationships which it learned from the previous data sets. Novel feature selection method will be discussed, other advanced machine learning methods such as ensemble learning will be considered to achieve a more reliable and accurate DSA tool for future grids.

- In the previous two algorithms, either there are no labels for all the observation in the data set or labels are present for all the observations. Semi-supervised learning falls in between these two. Supervised learning algorithms require large number of training samples which are normally from time-domain simulation. For future grids on-line security assessment, the requirement of time-domain simulation for training samples can be relaxed by semi-supervised learning algorithm. A novel DSA model using semi-supervised learning algorithm will be discussed. Data editing method will be used to overcome the disadvantage of the semi-supervised algorithm.

- In supervised and semi-supervised algorithms, neural network will be used as the core of the machine learning based tools. A new learning algorithm - Extreme Learning Machine (ELM) will be considered.

- A simplified 14-generator network model of southern and eastern Australia is used as a starting point for the CSIRO scenarios study. However, works are required to upgrade the network step by step and finally reach a desired future grid which is based on an AEMO 100 Percent Renewable Study [52], and other models [53]. In this future grid model, variable energy sources (e.g. wind and solar), new transmission technologies (e.g. Flexible Alternating Current Transmission System (FACTS) and HVDC) and responsive loads will be considered. The existing FACTS are kept as they are but new control loops may be added.

Standard RES models will be updated to realize ancillary services functionality. Load centres will be located at locations mentioned in the study, Distributed conventional synchronous generators driven by renewable energies such as gas turbines, which are used to pick up loads when RES are not available, are located close to load centres.

- Another Institute of Electrical and Electronics Engineers power system benchmark network model - New England System - is used in novel DSA tools using supervised and semi-supervised algorithms due to its simplicity. However, the model is updated with renewable generation and operating conditions are generated following the way in the CSIRO future grid project.

- In terms of simulation tool, PowerFactory is a very powerful simulation system for power system analysis. It incorporates a comprehensive list of simulation functions including the following major packages: Eigenvalue Analysis, Contingency Analysis, RMS Simulation, Load Flow Analysis, Protection Analysis and more other functionality. The PowerFactory software will be the major simulation tool to carry out necessary time-domain studies. DSAToolsTM is another most popular power system analysis tools and provides comprehensive system security assessment capabilities including Powerflow & Short circuit Analysis Tool PSAT, Voltage Security Assessment Tool VSAT, Transient Security Assessment Tool TSAT and Small Signal Analysis Tool SSAT. The powerful package of SSAT provides the user deep insight of the system small signal stability which will be used particularly in the research.

Chapter 2

The CSIRO Future Grid Study Project

2.1 Introduction

In the CSIRO project, I was involved in the study scenarios design and was responsible for transient stability study from modeling, simulation, results analysis to paper writing. In this chapter, future grid study scenario design and transient stability study conducted in the CSIRO project is presented. Different power system planning scenarios are discussed and transient stability performance of the scenarios are compared. Conventional time-domain simulation method is used in the transient stability study.

The study work carried out in the second part showed very high computational burden of the conventional time-domain method which leads to the research focus of this dissertation on machine learning methods application in future grids security assessment.

2.2 Project Background

In conventional power systems, large thermal and hydro power plants have provided balancing and stability control. Among different system needs, a priority after basic balancing of power and energy is to ensure that power flows and dynamics are within bounds and stable (for angle, voltage and frequency) in normal operation and after events (faults, failures). However, the conventional planning and control models, which are well-known and standardised, will be challenged by all new features of future grids: renewable energy sources (which are less predictable) and distributed generation, cost constraints on 'poles and wires' and new loads such as EVs which add new peaks.The further requirements here are ramping ability and stability. Thus,

the role of modelling and analysis related to balancing and stability for FG scenarios remains of central importance.

2.2.1 Existing Future Grid Studies

Many studies on the FG have been published by researchers. But, the majority of those research are focused on simple balancing studies by using a range of copper plate transmission models [53, 59, 60, 61, 52, 62]

The Zero Carbon Australia 2020 Stationary Energy Plan (ZCA2020 Plan) [53] aims to find a detailed and practical roadmap to decarbonise the Australian stationary energy sector within a decade. In the plan, wind power and Concentrating Solar Thermal (CST) with molten salt storage are the two primary technologies used, Detailed modelling was undertaken to ensure that the new renewable energy supply can meet all demand projected under the ZCA2020 Plan, 24 hours a day, 7 days a week, 365 days a year. The ZCA2020 Stationary Energy Plan describes how to repower Australia's stationary energy sector using 100% renewable sources by 2020. The authors acknowledge that the Plan detailed herein is not the only way that Australia could achieve zero emissions from the stationary energy sector.

In [59], least cost options are presented for supplying the Australian National Electricity Market with 100% renewable electricity using wind, photovoltaics, concentrating solar thermal with storage, hydroelectricity and biofuelled gas turbines. authors use a genetic algorithm and an existing simulation tool to identify the lowest cost (investment and operating) scenarios of renewable technologies and locations for NEM regional hourly demand and observed weather in 2010 using projected technology costs for 2030. A simplified transmission network is used to estimate the annual cost to balance supply and demand across NEM regions.

Combinations of renewable electricity sources are modeled (inland wind, offshore wind, and photovoltaics) with electrochemical storage (batteries and fuel cells), incorporated into a large grid system in [60]. The first target of this study is to find an combination can provide smooth output with help from storage. The second target is to seek minimal cost, calculating true cost of electricity without subsidies and with inclusion of external costs. In total 28 billion combinations of renewables and storage are evaluated, each tested over 35,040 hours (four years) of load and weather data.

In [61], authors explore the potential for a 100% renewable electricity generation system with substantially increased levels of wind penetration, fossil-fuelled electricity production was removed from an historic 3-year data set, and replaced by modelled electricity production from wind, geothermal and additional peaking options for the New Zealand power system. Generation mixes comprising 53–60% hydro, 22–25% wind, 12–14% geothermal, 1% biomass and 0–12% additional peaking generation were found to be feasible on an energy and power basis, whilst maintaining net hydro storage. Application of the approach applied in this research to countries with different energy resource mixes is discussed, and options for further research are outlined.

In 2011, the Australian Government announced its Clean Energy Future Plan. As one initiative under that plan, AEMO conducted a study [52] which explores two future scenarios featuring a National Electricity Market fueled entirely by renewable resources. This study considers two scenarios with differing views about how quickly renewable technologies will develop over time. Accordingly, power systems with differing configurations are also considered to emerge in each scenario. As pointed out in the report, the findings are tightly linked to the underlying assumptions and the constraints within which the study was carried out. Any changes to the inputs, assumptions and underlying sensitivities would result in considerably different outcomes.

The study in [62] examines the challenges of integrating significant volumes of wind power generation onto the power system of Ireland. The report provide the first significant modeling of power system behavior at unprecedented instantaneous penetrations of wind. According to the authors, the findings are a key element towards meeting Ireland's ambitious 2020 renewable energy targets.

2.2.2 Limitations of Existing Studies

All the above works neglected network related issues such as line congestion and stability in their studies. Further, most studies use conventional demand models, and ignore the influences of emerging demand-side technologies and the synergies that may arise between them when modeling net future demand.

Moreover, all assume specific market arrangements by which RESs are integrated into grid operations. This does not allow for the change and evolution of such market institutions in response to technological developments

that might better support the least-cost delivery of electrical power.

The CSIRO project is the observation that to the best of our knowledge, no international research so far has developed a standardized comprehensive modeling framework for future grids close to what have been accustomed to for classical systems: a suite of definitions, equations and software for power flow, stability analysis, dispatch, security and reliability.

2.3 Future Grids Security Assessment Framework

In this project, a future grid model is built and scenarios are designed and evaluated using a simulation platform presented in [63] which consists of market simulation, load flow calculation study and security assessment altogether. The electricity market model is built in PLEXOS based on a modified 14-generator model, and the dispatch results from the market are used for power flow study and security assessment.

2.3.1 Test System

In this work, we apply our scenario and sensitivity-based study framework on the Australian FG. A modified 14 generator model of the Australian NEM, which was initially developed for small signal stability studies [64], is employed as the test bed. A single line diagram of the 14-generator model of the NEM is shown in Fig.2.1. Areas 1 to 5 represent Snowy Hydro (SH), New South Wales (NSW), Victoria (VIC), Queensland (QLD) and South Australia (SA), respectively. All excitation system or Automatic Voltage Regulation (AVR) and Power System Stabiliser (PSS) of generators are adopted from [64]. Standard steam turbine governor model IEEEG1, gas turbine governor GAST and hydro turbine governor HYGOV are used. The NEM has been split into 16 zones according to AEMO's planning document to capture differences in generation technology capabilities, costs, weather and so on in [65], as shown in Fig.2.2.

2.3.2 Simulation Preparation and Procedures

AEMO's forecast hourly load profile in year 2040 is aggregated across each region of the NEM [66]. The demand data for each region is distributed among loads of the 14-generator model in a region based on their default percentage values in the region. The modified 14-generator model is then

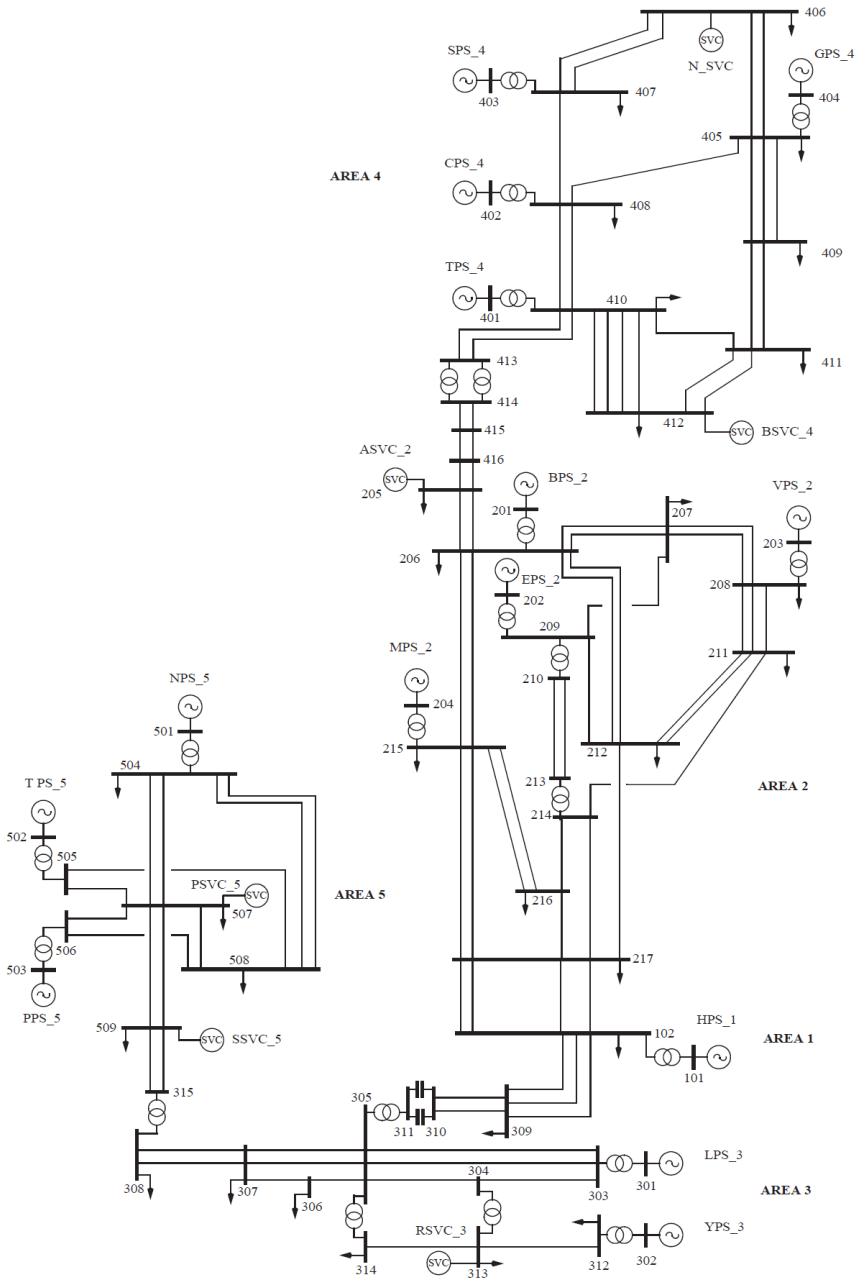

FIGURE 2.1: Simplified 14-generator model.

modeled in PLEXOS and DIgSILENT PowerFactory for the market simulations, balancing and security assessment, respectively.

Three major steps are involved in the future grid security assessment procedure and listed below.

- The first step after generation of scenarios is to perform a market simulation to provide the initial conditions/equilibria for system studies.

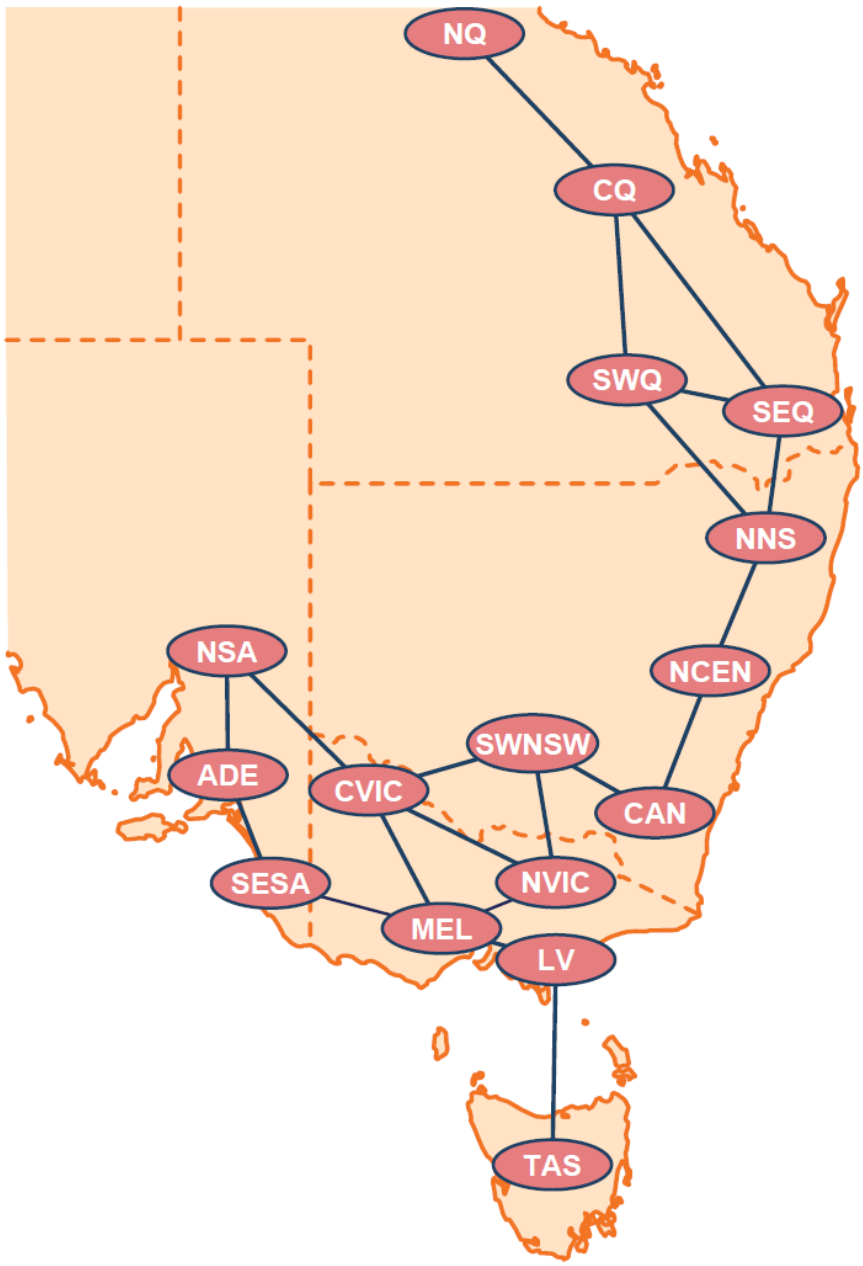

FIGURE 2.2: NEM 16-zones by AEMO.

The market model used in this study is based on a recent work presented in [67] which uses a modified Unit Commitment (UC) problem that includes the aggregated impact of prosumers (a generic demand model which represents the aggregated effect of price-responsive users equipped with rooftop PV-battery systems).

- In the next step of the future grid security assessment, load flow study

is carried out using the dispatch results from the market model. Powerflow and Short-Circut Analysis Tool (PSAT) of Dynamic Security Assessment Software (DSATools) are used for this purpose. The outputs of the load flow will be used as initial conditions for power system security assessment.

- In the third step, using the steady state conditions as results of the load flow study, power system security performance can be assessed to assure that the future grid can be operated securely.

The following stability analysis were performed using simulation softwares DSATools and DIgSILENT:

- Small signal stability (SSS): Damping ratio of the least stable rotor angle mode in the system is calculated in DIgSILENT for each hour of the simulated year using eigenvalue analysis method (QR method [26]).
- Transient stability: The Extended Equal Area Criteria (EEAC [68]) and time-domain simulation in Transient Security Assessment Tool (TSAT) were employed for TS assessment of the future grid, and TS index (TSI) was calculated for each hour of the simulated year.
- Long-term voltage stability: Long-term VS in the system was evaluated with the Voltage Security Analysis Tool (VSAT), and loadability margin was calculated for each hour of the simulated year.
- Frequency stability (FS): The system FS was evaluated using time-domain simulation in DIgSILENT. Minimum Rate of Change of Frequency (RoCoF) and frequency nadir were used to assess the system frequency behaviour after a contingency.

The calculation, interpretation and detailed explanation of the above transient stability indices are provided in Simulation Results. In the next section, the test-bed assumptions and modeling as well as FG scenarios for the Australian NEM are explained.

2.3.3 Assumptions and Scenarios Description

In this project, our FG scenarios are inspired by the published studies of

- 100% renewable scenario for the Australian NEM [69],

- general outcomes of the CSIRO FG Forum [70, 71],
- AEMO 100% RES Study [52].

The study in [69] proposes the least cost mix of diverse RES technologies (including WF, hydro, biogas, utility PV and concentrated solar thermal power plant with thermal storage) for an Australian FG. However, in that research, the balancing studies are simplified through relieving some technical constraints including the grid model, ramp rate and minimum up/down time of the generators, etc. Those constraints can change the dispatch results, the energy share of different resources, and even the least-cost mix of diverse RES technologies for the future of the NEM. Further, a simplified balancing study without considering network and stability constraints can not guarantee the feasibility of an operation scenario.

The proposed scenario and sensitivity based analysis is an approach which aims to overcome the limitations of those highly simplified approaches. that can address the structural balancing and stability issues and enlighten the path that should be followed in the future in terms of generation and network expansion, market design and the operation of FGs.

In our study, we obtained electricity demand, wind and solar traces from AEMO's National Transmission Network Development Plan (NTNDP) in 2040 [66]. The modified 14 generator model of the NEM, representing 100% renewable generation portfolio is shown in Fig. 2.1. In this Figure, the Areas 1 to 5 represent Snowy Hydro (SH), New South Wales (NSW), Victoria (VIC), Queensland (QLD) and South Australia (SA), respectively. We matched the 14-generator model with the 16 zones of the AEMO's NTNDP [66] to extract the corresponding wind, solar and demand traces for the market model.

In order to implement the suggested generation portfolio in [69] (which is based on demand and weather data in 2010), first, we scaled up the capacity of each generation technology based on the demand energy/peak power growth in each region of the NEM in 2040. Second, since the 14-generator model was originally developed based on the Australian grid in 2010, we had to reinforce the transmission system to ensure the system balancing. In the following sections, the features for sensitivity study are described.

- Network Strength Sensitivity

  The suggested network augmentation in the AEMO 100% RES Study [52] was used as a guideline for grid reinforcement. In addition, we monitored the voltage angle differences between busbars connected by

lines/transformers, and ensured that voltage angle differences between such busbars remain within acceptable bound at all times. This has led us to two levels of the network strength, i.e. Weak Network (Nw) and Strong Network (Ns) for the sensitivity aspect of the grid strength.

In the Nw sensitivity, the transmission lines are augmented just enough to ensure that the balance between demand and supply is maintained, although, the capacity factor of RESs is low (15%-20%). The reduced capacity factor is due to the curtailment of wind energy in some hours caused by the congested transmission lines.

In the Ns sensitivity, transmission lines are further augmented to guarantee the system balancing as well as a reasonable capacity factor for RESs, i.e. between 25%-35%. The augmented corridors in the 14 generator model of the NEM are also shown in Fig. 2.1. Table 2.2 compares the installed capacity of different RES technologies for the scaled up generation portfolio in Nw and Ns sensitivities. As it can be seen, the installed capacity of RESs in the Nw sensitivity is considerably higher than the scaled up generation portfolio in [69], which is due to very low capacity factor of RESs. Observe in the table that the generation portfolio in the Ns sensitivity is roughly the same as the scaled up generation portfolio in [69].

- Prosumers sensitivities

  Due to the emerging situation in Australia, where rooftop PV penetration is increasing significantly, we considered scenarios cases where prosumers equipped with rooftop PV play a significant role in re-shaping the future demand. Further, the rooftop PV owners are increasingly discouraged to export power back into the grid due to very low Feed in Tariffs (FiTs) and increasing grid electricity costs. Therefore, it is expected that most rooftop PV owners will install small-scale Battery System (BS) to utilize Integrated PV-battery systems (IPBS) in order to maximize their self-consumption. It appears likely that such a change will occur globally, as also acknowledged in [72]. With this prospect, we considered four different rooftop PV-battery uptake sensitivities as follows:

  - Medium uptake of rooftop PV, low uptake of BS (PmBl)
  - Medium uptake of rooftop PV, high uptake of BS (PmBh)
  - High uptake of rooftop PV, low uptake of BS (PhBl)

  - High uptake of rooftop PV, high uptake of BS (PhBh)

  Prosumers are considered amongst residential and commercial customers, whereas the industrial customers are left unaffected. The penetration of prosumers in each region of the NEM are adopted from AEMO studies in [73, 74]. In the sensitivities with low uptake of BS, only a portion of prosumers (10% to 40%, depending on the area of the NEM) are equipped with IPBS, and, for 1kW rooftop PV, 1.8kWh BS is considered. In the sensitivities with high uptake of BS, however, it is assumed that all the prosumers utilize IPBS. Furthermore, we performed a series of simulations to choose the ratio of household battery to rooftop PV for prosumers in those scenarios, and realized that 1kW rooftop PV/3kWh battery system allows prosumers to store excess generation from rooftop PV without spilling.

- Utility storage sensitivities

  Different penetrations of utility storage, i.e. zero (conventional demand), low (Sl), and high (Sh) are considered in this study. Currently, there is no utility storage installed in the NEM, and there are limited studies conducted regarding its future prospect in the Australian FG. Nevertheless, some studies suggested that installation of utility storage will take place in a foreseeable future in the NEM [70, 71]. In order to choose the location of utility storage, we populated the grid with utility storage and performed a series of simulations over the simulated year. Then, the busbars where utility storage could reach its maximum State of Charge (SoC) in most of the horizons were selected. The chosen busbars turn out to be close to RESs (with many surplus hours), as they provide cheap electricity in the grid. The surplus energy from RESs can be stored in the utility storage, and then can be used during peak hours and/or hours with lack of generation from RESs in order to reduce the total electricity cost in the system. For choosing the capacity of utility storage in each region, generation portfolio (including the surplus power from RESs) as well as the load energy/peak demand (power) in each region of the NEM were taken into account.

  In the rest of this chapter, we used the introduced abbreviations in Table 2.1 to refer to different FG sensitivities discussed. Some examples are given below to explain how the scenarios should be interpreted from the abbreviations in Table 2.1:

- NwSlPzBz: Weak Network and Utility Storage penetration low and PV penetration zero and Household Battery storage penetration zero.
- NsSzPhBh: Strong Network and Utility Storage penetration zero and PV penetration high and Household Battery storage penetration high.

TABLE 2.1: Abbreviations Used in Study Scenarios Description

Symbol (element)	Description	Symbol (penetration)	Description
N	Network	w/s	weak/strong
S	Utility Storage	z/l/h	zero/low/high
P	PV	z/m/h	zero/med/high
B	Household BS	z/l/h	zero/low/high

TABLE 2.2: Comparison of Generation Portfolio

Technology	Scaled up in (GW)	Network Weak (GW)	Network Strong (GW)
WF	55.7	90.1	55
Utility PV	4.3	9.2	6.4
CST	3.1	5.2	3.6
GT	26.5	33	33
Hydro	7.5	9	9

2.4 Future Grid Transient Stability Study

In this project, the objective of the transient stability analysis is to examine how various factors integrated in the scenarios affect the future grid transient stability.

In the designed scenarios, the synchronous machine is used for CSP, hydro and gas power stations. Though small in number, these conventional synchronous generators with massive rotating rotors play an important role in the future grid not only because they are working as dispatchable generators but also because they provide inertia to stabilize the system.

Researchers have done studies on how renewable generation impact on power system transient stability. In [75], the authors investigated the effect of high PV penetration on a large system. Both utility scale and distributed rooftop PV are modeled in their work. In [76], the authors present a stochastic-based approach to evaluate the probabilistic transient stability

indices of a power system incorporating WFs. In [77], the authors study if potential areas in a region of a Mediterranean partner country (MPC) are suitable (in terms of dynamic performance) for solar and wind generation integration. In [78], the impact of DFIG wind farm and its geographical dispersion on the power system transient stability in different cases are studied. In [79], the wind farm layout and wake effect on the power system transient stability are tackled. In general, simulation results of these studies reveal that, renewable generation penetration level, system topology, disturbance type as well as the location are all important factors in determining the nature of the impact on the system dynamic performance.

However, the existing studies all focus on very few factors which are considered as the features of the future grid, such as including PV farm, wind farm in a study. Another common feature of the exiting studies is that they all followed conventional stability assessment way by only study a few typical operating conditions and try to draw conclusion based on the results.

Different to the previous studies, in this project we consider more major potential features of the future grid, such as demand response, household battery storage, utility storage, etc. Moreover, the stability study is based on a scanning process rather than a few isolated operating points. The results of the stability scanning would give deeper insight of how the renewable generation reshape stability performance in different scenarios.

2.5 Transient Stability and Stability Indices

Large-disturbance rotor angle stability or transient stability, as it is commonly referred to, is concerned with the ability of the power system to maintain synchronism when subjected to a severe disturbance, such as a short circuit on a transmission line. The resulting system response involves large excursions of generator rotor angles and is influenced by the nonlinear power-angle relationship [17].

In all studied scenarios in this project, majority generators in the systems are non-synchronous machines; the synchronous machine is used for CSP, hydro and gas power stations. Though small in numbers, these conventional synchronous generators with massive rotating rotors play an important role in the future grid to not only working as dispatchable resources but also provide inertia to stabilize the system. Study transient stability of the different scenarios and analyse how different factors impact on the transient stability indices are important.

Time-domain simulation and direct method are playing important roles in offline and online power system stability assessments. To achieve fast transient stability assessment, many work have been done by researchers concentrated on the stability criterion based on the system dynamic response, including energy function analysis [80], phase-plane trajectories [81, 82, 83], equal area criterion citePaudyal2010, Mariotto2010 and projection energy function based on system trajectories [84]. Among the different transient stability indices, Extended Equal-Area Criterion (EEAC) [39] is approved to be an efficient and reliable method.

2.6 Extended Equal-Area Criterion Brief

The extended equal area criterion is a direct type method. It aims at enhancing and broadening the advantages of the Lyapunov criterion, by furnishing analytical expressions for ultra-fast analysis, sensitivity analysis and means to preventive control. To reach these objectives, the EEAC uses some conjecture, assumption, and approximation together with the equal area criterion (or equivalently the Lyapunov direct criterion) [39]. Extended Equal-Area Criterion is one of optional transient stability criterion in TSAT simulation software.

2.7 Simulation Results

The previously designed scenarios are used in this section to carry out transient stability study. Synchronous generator dynamic model is kept from the 14-generator system model for hydro, gas and CSP generators. The WECC type IV power converter dynamic model is used for renewable generators. Due to time-consuming time domain simulations, a typical week of each season in the year 2040 is chosen to conduct transient stability scanning. The equilibrium operating points for transient stability study are the result of the market model explained in previous sections. TSAT is a professional power system study tool which is used for transient stability study in this project. In TSAT settings, transient security index for base case analysis is selected as stability margin and the stability margin algorithm is selected to be angle margin which uses EEAC as the transient stability criterion. A three phase short circuit fault is applied on all 79 buses in all scenarios. The fault starts at 100ms and lasts for 100ms then it is removed with no equipment taken out of service.

Each time-domain simulation gives a stability level for that operating point; the stability level ranges between -100 (most unstable) to 100 (most stable). The stability levels of all operating points of a scenario are averaged in two ways for comparison purpose later on. For a particular contingency the stability levels of the system through out the weeks (672 hours) are averaged, the new stability index gives general stability level of the system due to this contingency; vulnerable buses can be identified using this index. The formula to calculate this stability level index is given below.

$$TSI_1 = TSI(c) = \frac{\sum_{h=1}^{672} TSI^c(h)}{672} \tag{1}$$

Another stability level index is calculated by averaging the stability levels as results of 79 contingencies applied on buses (79 buses) for each hour in the week. This new stability level index gives general stability level of the system at each hour across the week. The formula to calculate the index is given below.

$$TSI_2 = TSI(h) = \frac{\sum_{c=1}^{79} TSI^h(c)}{79} \tag{2}$$

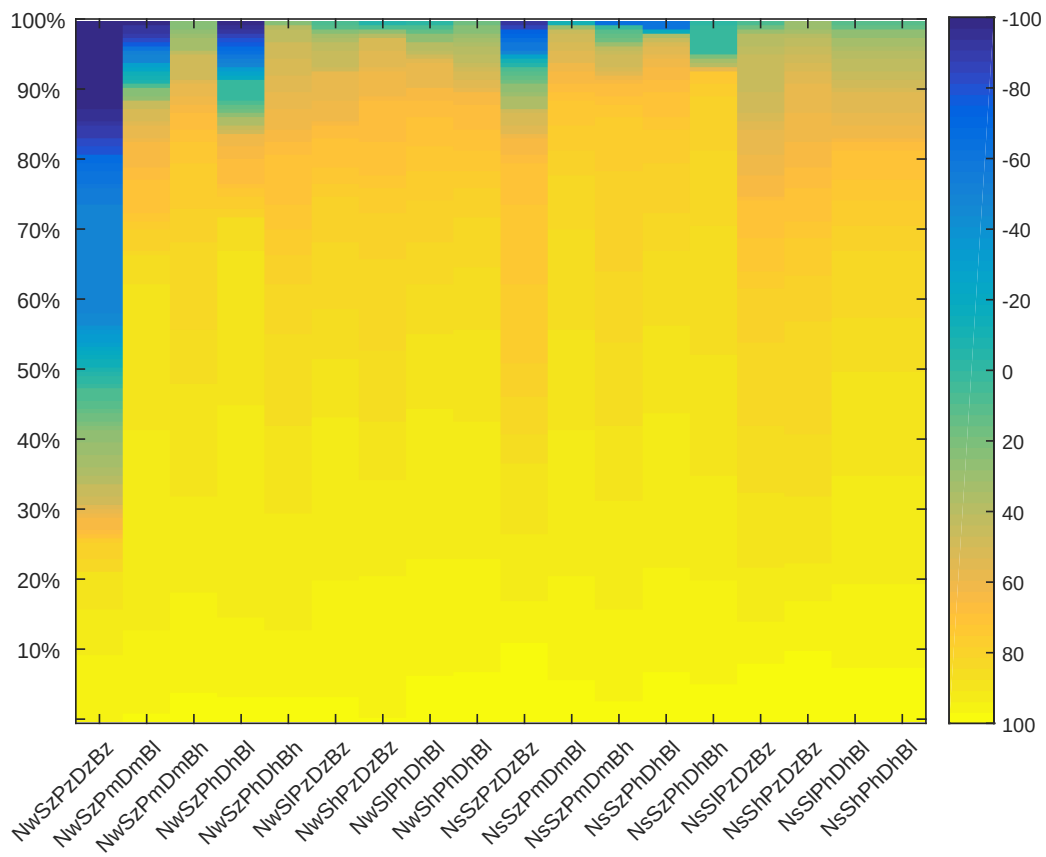

FIGURE 2.3: Hourly transient stability indices of all studied scenarios.

In Fig. 2.3 transient stability index TSI1 is used. A colormap is used to denote different stability level as simulation results for all 18 scenarios. For each scenario, simulation results of 79 faults are averaged hour by hour and then sorted in order. The colormap uses deep blue to stand for very unstable (-100) and deep yellow to stand for very stable (+100). Each column in the figure corresponds to one scenario and the ordered hourly stability indices are given different color according their values.

For weak network scenarios, NwSzPzDzBz, NwSzPmDmBl and NwSzPhDhBl are less stable among scenarios. For a stronger network, NsSzPzDzBz is the most unstable scenario.

Figure 2.4 uses another stability index TSI2 which is the hourly averaged transient stability index for each fault (bus). The figure shows the stability level of all 79 buses for all 18 scenarios. Same as in Figure 2.1, colormap is used to demonstrate different stability levels in all cases. Since most of the studied operating points are stable for applied faults, the average stability levels are all positive however which does not mean all operating points are stable.

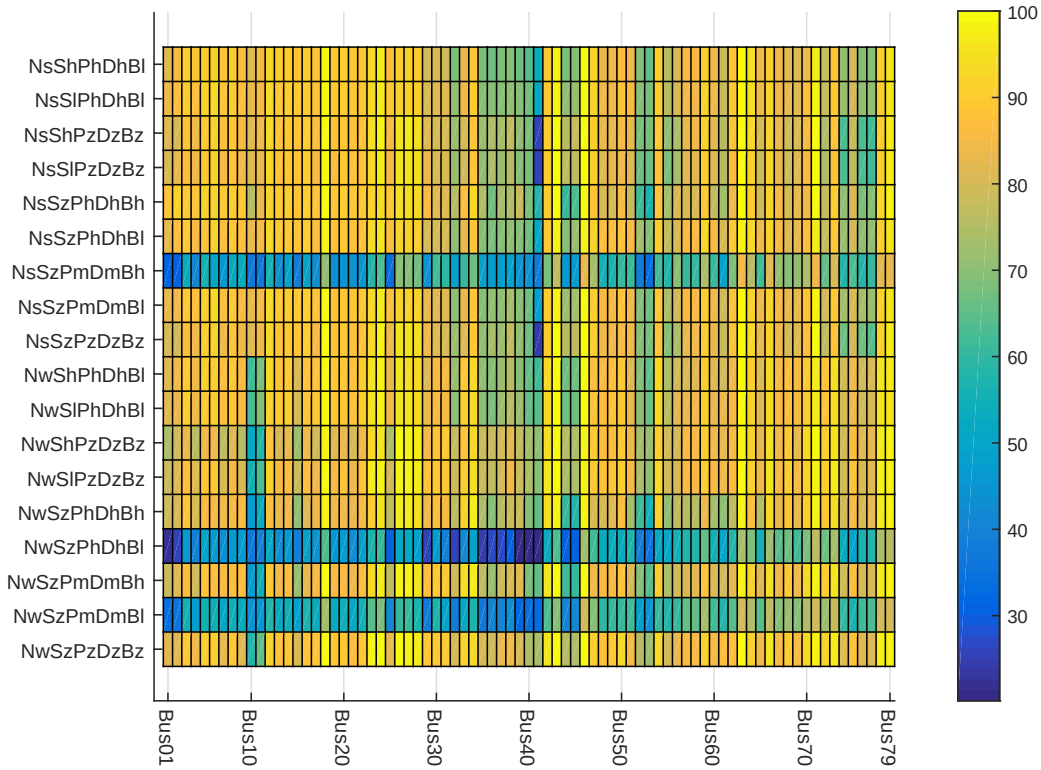

FIGURE 2.4: Projection of transient stability indices on all buses of all studied scenarios.

From Figure 2.4, it is easy to identify the most vulnerable buses. Bus

10 and bus 11 are the most vulnerable buses in the weak network scenarios, however this is not observed in strong network scenarios. In all scenarios, bus 41 seems to be the most vulnerable one and especially for scenarios NwSzPhDhBl, NsSzPzDzBz, NsSlPzDzBz and NsShPzDzBz.

In general, we can observe that network strength plays a big role in the system transient stability performance. Demand response also helps to stabilize the system. However, how utility level storage and residential battery capacity affect the transient stability is not quite clear and need further study.

2.8 Security Assessment Simulation Burden

The transient stability study of the future grid is based on AEMO's forecasted demand and renewable generation in the year 2040 with one hour interval for the year. The test system is relatively small with 14 aggregated generators, 28 loads, 59 buses and 90 transmission lines. The transient stability is done by time-domain simulation using EEAC method. A high performance PC is used to perform the simulation. From the simulation, power flow study took about 15 minutes to complete; about 4 days are required for transient stability study considering 59 contingencies; about 5 hours required to carry out the Small signal stability study and about 9 days required to finish the voltage stability study.

Considering a real world power system which is much bigger in scale, the computation burden of a full range of security scanning for planning purpose to find an optimal upgrading pathway is unbearable, even in the simulation, a direct method EEAC is used. Obviously, in order to achieve a future grid security assessment for planning requires a new method to overcome the computational burden. The next chapter presents a new machine learning tool for fast stability scanning using un-supervised method.

Chapter 3

Un-supervised machine Learning Method for Fast Stability Scanning

3.1 Introduction

This chapter is based on my POWERCON paper [85] and the first journal paper [86] focusing on fast scanning of small signal and voltage stability indices for long term planning study. Clustering is core of the task and it is an unsupervised machine learning method.

Unsupervised learning is a type of machine learning algorithm used to draw inferences from data sets consisting of input data without labeled responses. The goal for unsupervised learning is to model the underlying structure or distribution in the data in order to learn more about the data. In the power system security assessment area, the data sets are operating conditions and contingencies, the responses are referred to the system security levels under the given operating conditions and contingencies.

3.2 Background

Power systems are undergoing a major transformation driven by the increasing uptake of renewable energy sources, DC power transmission, and the decentralization of electric power supply underpinned by the information and communication technologies and demand-side technologies, like rooftop PV, energy storage, home energy management systems, and electric vehicles. How future grids will look like, however, is still uncertain as the evolution depends not only on technological development but also on the regulatory environment.

Therefore, one of the challenges associated with future grid planning is that the structure of a future grid cannot be simply extrapolated from the existing one.

3.2.1 Existing Studies

As an example, the emergence of prosumers[1] might change the demand profile, which results in a significantly different stability performance, as demonstrated in [87]. Instead, for future grids planning, several possible evolution paths need to be accounted for. Future grid planning is different to the conventional power system planning and the later only analyze a handful of the most critical scenarios. To account for a wide range of possible future evolutions, scenario analysis has been proposed in many industries, e.g. in finance and economics [88], and in energy [89, 90, 91, 92]. As opposed to the conventional power system planning, where the aim is to find an optimal transmission and/or generation expansion plan for an existing grid, the aim in scenario analysis is to analyze possible evolution pathways to inform power system planning and policy making. Given the uncertainty associated with long-term projections, the focus of future grid scenario analysis should focus on analyzing what is technically possible, although it might also consider an explicit costing [93]. Therefore, future grids' planning may involve large amount of scenarios and the existing planning tools may no longer suitable.

Future grid analysis is a growing research area. Melbourne Energy Institute [53] have proposed a possible plan for a future Australian grid relying 100% on renewable energy sources. The Centre for Energy and Environmental Markets at the UNSW [54, 94] has shown for the Australian National Electricity Market that balancing a 100% RES power system is technically possible. The PJM study [95] has shown that the PJM network can be powered 90-99.9% of the time entirely on RESs, at a cost comparable to today's. The existing studies, however, only focus on balancing and use a simplified copper plate model of the transmission network. They also neglect stability analysis, which limits their value.

Stability analysis is an important task in power system planning. In conventional stability analysis, only a small number of worst-case critical conditions is typically analyzed. If stable under those conditions, the system is assumed stable in all possible credible operating conditions. The selection

[1] Consumer with generation (e.g.rooftop-PV) and battery storage (**pro**ducer-con**sumer**).

of the critical conditions is most often based on the historical performance, and planners' experience and judgment [96, 97, 75, 98, 99]. In power systems with significant penetration of intermittent RES, the generation dispatch and the associated power flows change many times throughout the day and often follow rather different seasonal patterns, which renders past operational experience of limited value. Although the authors of a future grid study [100] selected a few critical operation points for stability analysis, they also pointed out that there is no guarantee that these cases are necessarily the most difficult ones.

3.2.2 Motivation Behind the Study

Chronological time series scanning offers a way for the stability analysis of a power system with a constantly varying operating conditions, and to capture the inter-seasonal variations in renewable generation. With time series scanning, it is possible to capture stability performance over a long horizon. The authors in [101] have demonstrated the value of using time-series analysis for steady-state voltage stability analysis of a power system with high penetrations of wind. They have shown that in contrast to traditional power systems without intermittent generation, in a system with a high RES penetration, the worst case operating point shifts. The time-consuming time-series simulation, however, was not discussed in [101]. Instead, the worst case points were manually picked from several years worth of data, and the simulations were performed around these points to reduce the computational burden.

The Future Grid Research Program funded by the Australian Commonwealth Scientific and Industrial Research Organisation is to propose a comprehensive modeling framework for future grid scenario analysis. The aim of the project is to explore possible future pathways for the evolution of the Australian grid out to 2050 by looking beyond simple balancing. To this end, a simulation platform has been proposed in [63] that consists of a market model, power flow analysis, and stability analysis. Preliminary results have shown, however, that time-series scanning over a one-year horizon is computationally very expensive as demonstrated in Chapter 2.. To speed-up the computation, we propose a machine learning based framework for fast stability scanning. The efficacy of the framework is demonstrated on a simplified 14-generator model of the Australian National Electricity Market.

3.3 Contribution of This Study

The main contribution of this study is a framework for fast stability scanning using ML. The ML techniques used in the study (clustering, feature selection, PSO-k-means) have been used in the past in many power engineering applications [102, 103, 104, 105, 106, 107, 1, 6, 2, 3, 108, 4, 109, 110]. Implementing them directly to the problem of fast stability scanning, however, is infeasible because the number of operating conditions and the number of features required to describe an operating condition are much larger than in the existing applications. To address that, we propose a self-adaptive PSO k-means clustering algorithm that considers both the adjusted feature ranks and weights for clustering and optimal selection of the number of clusters.

The rest of the chapter is organized as follows: Section 3.4 outlines the simulation platform for future grid scenario analysis. Section 3.5 gives an overview of the application of ML in power systems and describes the pertinent ML algorithms. Section 3.6 proposes a novel fast stability scanning framework. In Section 3.7, the efficacy of the proposed framework is demonstrated on a simplified 14-generator network model of the Australian National Electricity Market. Section 3.8 concludes the chapter.

3.4 Simulation Platform

We use the simulation platform for future grid scenario analysis originally proposed in [63] as the basis, summarized in Algorithm 1. The platform consists of four modules: (i) scenario generation, (ii) market simulation, (iii) load flow analysis, and (iv) stability analysis, described in more detail later. The other three modules remain the same.

Algorithm 1 Future grid scenario analysis.

Input: Network data, generation data, wind, solar and demand traces for each scenario $s \in \mathcal{S}$ in the studied year.
Output: Stability indices for each time slot $t \in \mathcal{T}$, for each scenario $s \in \mathcal{S}$.

```
for s ← 1, |S| do
    for t ← 1, |T| do
        Market simulation (generation dispatch);
        Load-flow analysis;
    end for
    for t ← 1, |T| do
        Stability analysis (voltage, angle, frequency);
    end for
end for
```

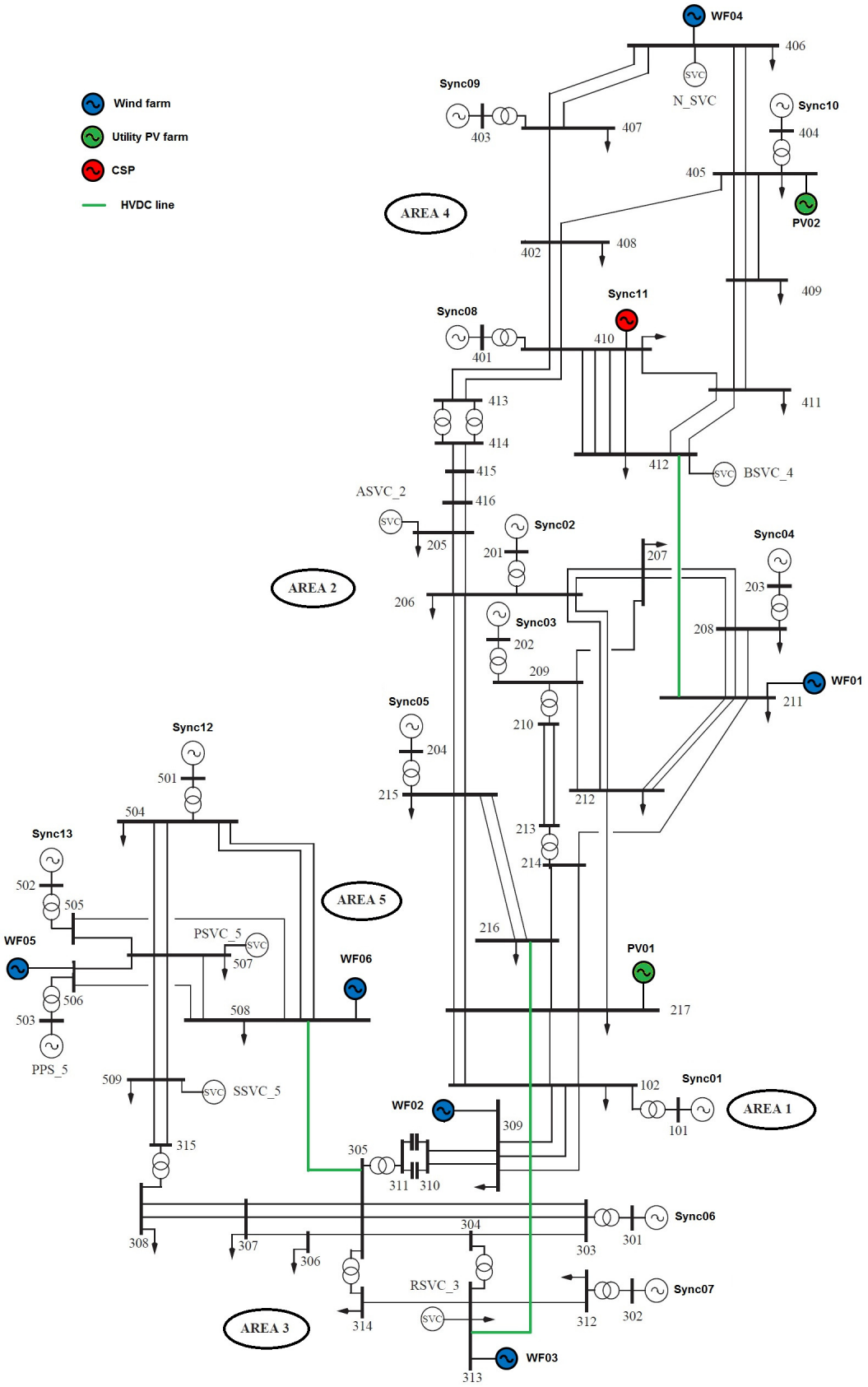

FIGURE 3.1: 14-generator test system.

3.4.1 Test System

We use a modified 14-generator IEEE test system that was initially proposed in [64] as a test bed for small-signal analysis. The system is loosely based on the Australian National Electricity Market, the interconnection on the Australian eastern seaboard. The network is stringy, with large transmission distances and loads concentrated in a few load centers. It consists of 59 buses, 28 loads and 14 generators, each representing a power station consisting of between 2 to 12 units, resulting in a total of 74 synchronous machines. The single-line diagram of the test-bed is illustrated in Fig. 3.1, in which Areas 1 to 5 represent Snowy Hydro , New South Wales, Victoria, Queensland and South Australia, respectively. Areas 1 and 2 are electrically closely coupled, hence the system has four distinct areas.

3.4.2 Scenario Description (Line 1 in Algorithm 1)

Given that the focus of the study is fast stability scanning, we only analyze one future grid scenario. We augmented the test system by replacing conventional synchronous generators at selected buses with Wind Farms (WF) and PV farms, and a concentrated solar thermal plant, as shown in Fig. 3.1, resulting in 30% RES energy penetration. To increase the transfer capacity of the network, we added HVDC links between buses 412 and 211, 216 and 313, 305 and 508, reinforced the existing AC transmission corridors and added static var compensator to improve voltage control. We used wind, solar and demand predictions for the year 2030 from the Australian Energy Market Operator's National Transmission Network Development Plan [111].

3.4.3 Time-series Analysis (Lines 2-5 in Algorithm 1)

Time-series analysis consists of market simulation and load-flow analysis using the generation dispatch results. To capture the inter-seasonal variations in renewable generation and the demand, we need to analyze a full year, which results in $|\mathcal{T}| = 8760$ assuming hourly resolution.

3.4.3.1 Market Model (Line 3 in Algorithm 1)

The aim of the market model is to emulate the outcome of an efficient electricity market without assuming any particular market structure. The model is based on a unit commitment problem aiming to minimize total electricity generation cost, and is subject to the following constraints: power

balance, spinning reserve, power generation limit, start-up and shut-down constraints, ramp rate limits, generator minimum up time restrictions, and generator minimum down time restrictions. To achieve an acceptable computational performance, the resulting mixed-integer optimization problem is solved using a rolling horizon approach with hourly resolution. The decision horizon is two days, where the solution for the first day is retained, and the solution of the next day overlaps with the next two-day horizon. We assume that generators bid at their respective short-run marginal cost, which we assume to be zero for RES. A more complete description of the model is given in [112].

3.4.3.2 Load-flow Analysis (Line 4 in Algorithm 1)

Load-flow analysis uses the dispatch results of market simulation and the load traces from [111]. RES are assumed to operate in a voltage-control mode. With hourly resolution, we obtain 8760 operating points, or instances, representing the year 2030. Each operating point is represented by a set of steady-state power system variables, or features. The operating points resulting from the time-series analysis are used for stability analysis.

3.4.4 Stability Analysis (Lines 6-8 in Algorithm 1)

In this study, we focus on small-signal and static voltage stability, although the simulation platform can also cover large-disturbance angle (transient) stability and frequency stability [113].

3.4.4.1 Modal Analysis

Small disturbance (or small-signal) rotor angle stability is concerned with the ability of a power system to maintain synchronism under small disturbances [17]. Small signal stability problems are usually due to lack of damping. Inter-area oscillation modes may cause large power swing across interconnectors and can lead to system collapse or splitting. In this study, the system exhibits a poorly damped inter-area mode between NSW and QLD, which is the focus in stability scanning. We use modal analysis of a power system model linearized around the current operating point.

3.4.4.2 Steady-state Voltage Stability

Voltage stability refers to the ability of a power system to maintain steady voltages at all buses in the system from a given initial operating condition[17]. Voltage stability problems are typically associated with lack of reactive power support, which can result from heavily load transmission lines. In systems with high RES penetration, as in this study, this is of particular importance given the constantly varying power infeed. Several stability indices have been proposed for voltage stability assessment, giving a measure of the distance of the current operating point from the voltage collapse point [114]. In this study, we used the loadability margin for stability scanning.

3.5 Clustering and Feature Selection

ML has been used in different power systems applications [102, 103, 104, 105, 106, 107, 1, 6, 2, 3, 108, 4, 109, 110]. In online dynamic security assessment[2], ML is used for classification, to map a system operating condition into a suitable stability index, for example for voltage stability [102, 103] and on-line transient stability assessment [104, 105].

The classification of a system security status consists of three steps: (i) a large database is generated using time-domain simulation to create a training set; (ii) a set of features that best describe an operating condition is selected as the inputs of the classifier; and (iii) the classifier is trained using an appropriate tool, e.g. an artificial neural network [102, 103, 106], a support vector machine [107], or a decision tree [1].

To cover a large amount of possible operation conditions and to achieve an acceptable level of accuracy, however, the training set is normally very big—thousands of operation points for a relatively large conventional systems with no RES [6]. One possible way to address the problem is to reduce the size of the training data set by limiting or fixing the load or generation variation range for imminent hours only [106, 1].

For a study of a future power system with high RES penetration, the possible operating space is even larger. Therefore, a direct application of existing DSA methods becomes infeasible. Instead, as proposed in this study, clustering is required to reduce the number of operating points for stability scanning.

[2]Online security assessment involves both dynamic and static security assessment. The term dynamic security assessment is usually used to denote both.

Clustering, in particular the k-means algorithm, has been used in power systems for scenario reduction before, for example to group substation load profiles based on the chronological demand curves' magnitudes [2, 3]; to group similar P and Q patterns before classification [108]; to group similar bus voltage and frequency response signals in order to locate outliers [4]; and to group similar wind farm power and load level patterns to reduce simulation time for the transfer capability assessment [109, 110]. When the number of features is small, implementing a clustering algorithm is straightforward. For example, [2, 3, 4] require only one feature, and [108, 109, 110] two features. In our application, on the other hand, the operating scenarios are defined by hundreds of correlated features, which requires some modifications to the conventional clustering algorithms. In particular, we need to consider the importance or the weight of each feature on the stability index, which we discuss in the next section. Before describing the proposed framework for fast stability scanning, we first describe the two pertinent ML algorithms, i.e. k-means for clustering and ReliefF for feature selection.

3.5.1 Clustering

Clustering is the task of grouping a set of objects into clusters based on their similarity [115]. A cluster is described by its internal homogeneity and the external separation, i.e., patterns in the same cluster should be similar to each other while patterns in different clusters should not [115]. When clustering a large amount of data, their similarity is usually expressed as a distance. After clustering, all elements within a particular cluster can be represented by the center of this cluster or a cluster centroid. In power systems, clustering is a popular ML algorithm used for dimensionality reduction. It has been used in load forecasting [3], to accelerate the convergence of the Monte Carlo simulations in transfer capability analysis [109], and to study the influence of power flows on the damping of critical oscillatory modes [116].

3.5.1.1 k-means Algorithm

Among many data clustering methods, k-means algorithm is one of the most often used methods for clustering. This method is very simple and especially suitable for large data sets and can be easily implemented in solving many practical problems.

For a given data set $\mathcal{X} = \{x_i \mid x_i \in \mathbb{R}^n, i = 1, 2, ..., n\}$, the algorithm partitions the data into k clusters, $C_1, C_2, ..., C_k$, where $c_1, c_2, ..., c_k$ are cluster

centroids or cluster means, defined as:

$$c_j = \frac{1}{N_j} \sum_{x \in C_j} x, \tag{1}$$

where N_j is the number of data points in cluster j. Conventionally, k is an input parameter to the algorithm. The similarity of the data in a cluster is defined as their Euclidean distance to the cluster centroid. In Cartesian coordinates, the Euclidean distance between two points x_i and x_j is defined as:

$$d(x_i, x_j) = \sqrt{\sum_{h=1}^{n} w_h (x_{ih} - x_{jh})^2}, \tag{2}$$

where feature weights w_h are set to 1 in the conventional k-means algorithm, and h denotes the dimensionality of the feature.

The k-means algorithm can be cast as an optimization problem with the following objective:

$$\arg\min_{C} \sum_{i=1}^{k} \sum_{x \in C_i} \|x - c_i\|^2 \tag{3}$$

This is a NP-hard problem, for which several efficient heuristic solution techniques have been proposed [115]. It is efficient in clustering large data sets, however being a non-convex problem, it often terminates in local optima.

3.5.1.2 Particle Swarm Optimization (PSO)

PSO is a population-based stochastic search process used to solve global optimization problems where conventional mathematical programming approaches fail [117]. In the PSO, a swarm consists of a number of potential solutions to the optimization problem, where each particle of the swarm corresponds to a potential solution. In the context of clustering, a single particle represents a group of cluster centroids. The aim of the PSO is to find the position of a particle that results in the best evaluation of a given objective function, in our case the Sum of the Mean Squared Error (SMSE) defined as:

$$J_e = \frac{1}{N_c} \sum\nolimits_{j=1}^{N_c} \left[\frac{1}{|C_j|} \sum_{x_i \in C_j} d(x_i, c_j) \right], \tag{4}$$

where N_c is the size of the cluster centroid vector, c_j is a cluster centroid defined in (1), $|C_j|$ is the number of data vectors belonging to cluster C_j, and

$d(\cdot)$ is the Euclidean distance defined in (2). To search for the best solution in a multi-dimensional space, the particles "fly" through the space with different speeds and directions. In the searching process, the fitness (4) of each particle is evaluated and stored. The historical best position of each particle p_{best} and the global best position g_{best} among all the particles are used to adjust the flying speed and the direction of the particles.

The velocity of each particle is updated according to:

$$\begin{aligned} v_i(n+1) = w \cdot v_i(n) + c_1 \cdot \text{rand}_1 \cdot (p_{\text{best}} - p_i(n)) \\ + c_2 \cdot \text{rand}_2 \cdot (g_{\text{best}} - p_i(n)) \end{aligned} \tag{5}$$

where c_1 and c_2 are constants, $\text{rand}_1 \in [0, 1]$ and $\text{rand}_2 \in [0, 1]$ are randomly generated numbers, and w is the inertia factor defined as:

$$w = w_{\text{max}} - n_{\text{iter}} \cdot \frac{w_{\text{max}} - w_{\text{min}}}{N_{\text{iter}}}. \tag{6}$$

The particles' position are iteratively updated as follows:

$$p_i(n+1) = p_i(n) + v_i(n+1). \tag{7}$$

In [118, 119], the authors have demonstrated that the combination of PSO and k-means clustering can improve the clustering performance or, to some extent, overcome the weaknesses of the k-means algorithm. We build on that by proposing an improved self-adaptive PSO-k-means clustering algorithm, discussed in more detail in Section IV.B.

3.5.2 Feature Selection

An operating condition of a power system is defined by a set of system variables, or features, e.g. generator active and reactive powers, bus voltage magnitudes and angles, load levels, etc. Feature selection is a process of selecting a subset of relevant features that is necessary and sufficient to describe the target concept by reducing the dimensionality of the input data and enhancing generalization by reducing over-fitting [120]. Feature selection has attracted significant attention in DSA, e.g. in [121, 107, 122].

3.5.2.1 Relief Algorithm

A popular feature selection algorithm with little application in power systems is ReliefF [123, 120]. The main idea of the original Relief algorithm

[123] is to estimate features' ability, represented by features' weights, to distinguish between instances, power system operating conditions in our case, that are near to each other.

Algorithm 2 RReliefF feature selection algorithm [120]

Input: For each training instance $r \in \mathcal{R}$ a vector of attribute values $a \in \mathcal{A}$ and predicted values $\lambda \in \mathcal{L}$.
Output: For each training instance $r \in \mathcal{R}$ a vector $w \in \mathbb{R}^{|\mathcal{A}|}$ of estimations of the qualities of attributes $a \in \mathcal{A}$.

1: Set all w to 0;
2: **for** $i \leftarrow 1, m$ **do**
3: Randomly select instance r_i;
4: Select k instances q_j nearest to r_i;
5: **for** $j \leftarrow 1, k$ **do**
6: $n^{\text{dc}} \leftarrow n^{\text{dc}} + \text{diff}\,(\lambda(\cdot), r_i, q_j) \cdot d(r_i, q_j)$
7: **for** $l \leftarrow 1, |\mathcal{A}|$ **do**
8: $n_l^{\text{da}} \leftarrow n_l^{\text{da}} + \text{diff}\,(l, r_i, q_j) \cdot d(r_i, q_j)$
9: $n_l^{\text{dca}} \leftarrow n^{\text{dca}} +$
10: $\text{diff}\,(\tau(\cdot), r_i, q_j) \cdot \text{diff}\,(l, r_i, q_j) \cdot d(r_i, q_j)$
11: **end for**
12: **end for**
13: **end for**
14: **for** $l \leftarrow 1, a$ **do**
15: $w_l \leftarrow n^{\text{dca}}/n^{\text{dc}} - (n^{\text{da}} - n^{\text{dca}})/(m - n^{\text{dc}})$
16: **end for**

The original Relief algorithm [123] is limited to two-class problems. Its extensions, ReliefF and RReliefF can also deal with multi-class and regression problems, respectively [120]. The pseudo code for the RReliefF algorithm used in this study is shown in Algorithm 2, where n_{dc}, n_{da}, and n_{dca} denote the weights for the prediction values of different prediction (line 6), different attribute (lines 8) and for different prediction and different attribute (line 9 and 10), respectively.

The term $d(r_i, q_j)$ takes into account the distance between the two instances r_i and q_j. It is defined as:

$$d(r_i, q_j) = \frac{d_1(r_i, q_j)}{\sum_{l=1}^{k} d_1(r_i, q_j)} \tag{8}$$

Closer instances should have greater influence, so the influence of instance r_j is exponentially decreased with the distance from the given instance r_i:

$$d_1(r_i, q_j) = e^{-(\text{rank}(r_i, q_j)/\sigma)^2} \tag{9}$$

where rank(r_i, q_j) is the rank of the instance q_j in a sequence of instances ordered by the distance from r_i and σ is a user defined parameter controlling the influence of the distance.

3.6 A Novel Fast Stability Scanning Framework

In the original simulation platform [63], stability analysis is performed on all operating points, which is time consuming. We propose a framework for fast stability scanning to achieve a significant computational speed-up. The framework consists of three parts: (i) feature selection, (ii) clustering, and (iii) stability analysis. The pseudo code of the framework is shown in Algorithm 3.

Definition 1 *Let $\mathcal{R} = \{r_i \mid r_i \in \mathbb{R}^{|\mathcal{A}|}, i = 1, 2, \ldots, |\mathcal{R}|\}$ denote a steady-state power system operating condition, uniquely defined by a set of attributes $\mathcal{A} = \{a_i \mid r(a_i) \in [-1, 1]^{|\mathcal{R}|}, i = 1, 2, \ldots, |\mathcal{A}|\}$, where $r(a_i)$ is a normalized numerical value of attribute a_i across all operating conditions. For each operating condition $r_i \in \mathcal{R}$, we compute a stability index $\lambda_i \in \mathbb{R}$. The task of **fast stability scanning** is to cluster $\mathcal{R}$ into a set of representative clusters $\mathcal{C}$ represented by cluster centroids $c \in \mathbb{R}^{|\mathcal{A}|}$, so that $|\mathcal{C}| < |\mathcal{R}|$, and to compute a stability index $\hat{\lambda}$ using cluster centroids $c \in \mathcal{C}$, so that $|\lambda - \hat{\lambda}| \leq \epsilon$ for all $r \in \mathcal{R}$, where ϵ is a predefined tolerance.*

Algorithm 3 Fast stability scanning framework.

Input: Set of operating conditions $\mathcal{R}$, feature selection performance ρ and tolerance ϵ_{f}, set of features $\mathcal{A}$.
Output: Stability index λ for each for each $r \in \mathcal{R}$, minimum cluster distance ϵ_{c}, minimum data distance ϵ_{d}.

```
while ρ ≥ ϵ do
    Randomly select a training instance r_i;
    Run feature selection using RReliefF (Algorithm 2);
    Update feature weights for all a ∈ A (10);
end while
Run self-adaptive PSO-k-means clustering (Algorithm 4);
for c ← 1, |C| do
    Calculate λ(c);
end for
for r ← 1, |R| do
    Assign λ(c) to r(c);
end for
```

A time-series analysis of one full year with an hourly resolution results in $|\mathcal{R}| = 8760$. A minimum feasible set $\mathcal{A}$ includes voltage magnitudes and

angles at all buses in the system, active and reactive demands, and active and reactive powers of all generators in the system. Without the loss of generality, however, $\mathcal{A}$ can also include derived variables, such as transmission line flows.

The framework proposed in this study bears similarities and differences with online DSA. They both involve knowledge base generation and feature selection. The first difference is in the offline simulation. As a supervised learning method, DSA requires a big knowledge base to achieve high accuracy mapping, which requires a lot of offline simulation. Fast scanning, on the other hand, is an unsupervised learning method, so the offline simulation is only needed for the feature selection and to generate the operating conditions for the stability analysis, which has a much lower computational burden. The second difference is in the application. DSA is an operational tool, which requires fast mapping of current or imminent operating conditions and a very high accuracy since the mapping result is the basis for preventive or emergency control. Fast scanning, on the other hand, is a planning tool that aims to scan a lot of scenarios across long horizons to provide planners with the stability level of the system under study.

3.6.1 Feature Selection for Weighted Clustering (Lines 1-5 in Algorithm 3)

Compared to conventional DSA, we propose two innovations in feature selection: (i) both feature ranks and weights are used in clustering, and (ii) the size of the required training set for feature selection is determined adaptively to reduce the simulation time.

In this study, candidate features considered for clustering include active and reactive powers of the loads, thirteen synchronous generators including one CSP, six wind farms, two utility PV farms, HVDC links, and inter-area active and reactive power flows. Due to the dimensionality of the space of operating conditions, feature weights have to be considered in clustering.

In [102, 103, 104, 105], feature ranks are used to select a subset of candidate features used in the classifier that determines the feature weights. In this study, both feature ranks and weights resulted from ReliefF algorithm are used for clustering. Feature weights also require preprocessing, due to two reasons: (i) the accumulated effect of many unimportant features may mask the effect of a smaller number of dominant features, and (ii) to improve the

representativeness of the cluster centroids', the degree of segmentation for features with large variance should be increased.

We propose the following weight adjustment for all $a \in \mathcal{A}$:

$$\tilde{w}_i = C \cdot w_i \cdot \frac{\text{var}(r(a_i))}{\log\left(2 \cdot \text{rank}(a_i)\right)} \tag{10}$$

where C is a tunable parameter, and $\tilde{w}_i$ and w_i are adjusted and original feature weights, respectively.

3.6.2 Self-adaptive PSO-k-means Clustering (Line 6 in Algorithm 3)

The conventional k-means clustering algorithm has two inherent drawbacks: (1) its clustering performance depends on randomly assigned initial cluster centroids, which can lead to unreliability; (2) the algorithm is based on gradient descent and can thus easily terminate in local optima.

In the PSO-k-means algorithm, the solution of the PSO can be used as the initial k-means cluster centroids, which can avoid the algorithm trapping in local optima. However, like any other global optimisation algorithm, the PSO is prone to premature convergence. This may be improved by increasing the size of the swarm but at the cost of an increased computational burden. Another issue is to determine the cluster numbers and how to deal with empty clusters. To address these issues, we propose a self-adaptive PSO-k-means clustering algorithm, described in Algorithm 4.

The algorithm starts with the initialization of the PSO particles. Random cluster centroids (operating points in our case) are assigned as the particles' initial position C_0, and local best $p_{\text{best},0}$, global best $g_{\text{best},0}$ are calculated using a random initial velocity V_0.

The PSO (Lines 2 to 13) is ran first to locate the best initial position, which is then used by the k-means clustering in the second stage (Lines 14 to 20).

In the PSO run, the position and the direction of each particle are updated in every iteration.

The issue with the conventional PSO algorithm is that a particle may fly out of the load-flow solution space, resulting in a divergent load flow and hence an infeasible cluster. To overcome this, the nearest feasible position within the solution space is used instead of the invalid position (Line 6). To the premature convergence of the conventional PSO algorithm, we adopt a technique proposed in [124] that monitors the fitness variance of all the particles in the swarm in each iteration and uses it as an indicator of premature

Algorithm 4 Self-adaptive PSO-k-means clustering.

Input: PSO iteration limit $\mathrm{MaxIter}$
Output: Cluster centroids C.

1: Initialize C_0, V_0, $p_{\mathrm{best},0}$, $g_{\mathrm{best},0}$;
2: **while** iteration $\leq \mathrm{MaxIter}$ **do**
3: **for** $i \leftarrow 1, \mathrm{SwarmSize}$ **do**
4: Update V_i, C_i (5);
5: Update $p_{\mathrm{best},i}, g_{\mathrm{best},i}$ if required;
6: Search space limit check;
7: **end for**
8: Calculate swarm fitness variance (4);
9: Calculate mutation probability p_{m} [124];
10: **if** $p_{\mathrm{m}} > \mathrm{rand} \in [0, 1]$ **then**
11: Mutate g_{best} (9);
12: **end if**
13: **end while**
14: The best particle position is used as initial cluster centroids for k-means;
15: **repeat**
16: Perform k-means clustering;
17: Remove empty clusters;
18: Create new cluster for data points $d(r, c(r)) > \epsilon_{\mathrm{d}}$;
19: Combine clusters if $d(c_i, c_j) < \epsilon_{\mathrm{c}}$;
20: **until** convergence

convergence. A mutation probability p_{m} is calculated according to [124] and used as a trigger for a mutation of g_{best} (Lines 10 to 12). The mutation of g_{best} is defined as:

$$g_{\mathrm{best},k} = g_{\mathrm{best},k} \cdot \left(1 + \frac{\eta}{2}\right) \tag{11}$$

where η is a normally distributed random variable.

3.6.3 Stability Scanning (Lines 7-11 in Algorithm 3)

Compared with the initial number of operating points, the number of representative clusters resulting from clustering is much smaller. The stability analysis is performed on cluster centroids using conventional stability analysis. The stability index $\lambda(c)$ is assigned to every operating point $r(c)$ represented by the cluster centroid c.

Given $|\mathcal{C}| < |\mathcal{R}|$, the computational time is significantly reduced.

TABLE 3.1: Features and weights for SSS

Feature name	Initial weights	Initial rank	Adjusted weights	Adjusted rank
Sync11_P	0.106	1	7.709	1
WF04_P	0.098	2	2.267	2
Sync11_Q	0.062	3	1.748	3
PV02_P	0.054	4	1.020	4
PV01_Q	0.041	8	0.538	5
PV01_P	0.040	11	0.465	6
WF04_Q	0.039	12	0.397	7
PV02_Q	0.035	17	0.396	8
Sync09_P	0.048	5	0.310	9
Sync08_Q	0.047	6	0.297	10

3.7 Simulation Results

In order to evaluate the efficacy of the proposed fast stability scanning framework, we performed small signal stability and steady-state voltage stability analysis of a simplified model of the NEM in the year 2030 described in Section III. Fast stability scanning is performed using the representative cluster centroids and the results are compared with the time-consuming time-series stability analysis, that uses all 8760 operating points.

For small-signal stability, the damping ratio of the inter-area oscillation mode between Areas 2 and Area 4 is used as the stability index, whereas for voltage stability, we used the loading margin assuming a uniform load increase at all load buses in the system, where all generators increase their production in proportion to the base case. We first present the results of feature selection and clustering, followed by the results of stability scanning.

3.7.1 Feature Selection

Tables 3.1 and 3.2 show the top 10 features' initial weights and ranks, and the adjusted weights and ranks for SSS and VS, respectively.

The results confirm the necessity of feature selection before clustering. Notice that the feature weights after the feature selection for SSS and VS differ significantly, which reflects the different features' impact on SSS and VS. It is interesting to observe that the generator Sync11 (CSP) and Wind Farm 04, both located in northern QLD, have a significant impact on the oscillation mode between Areas 2 and 4.

TABLE 3.2: Features and weights for VS

Feature name	Initial weights	Initial rank	Adjusted weights	Adjusted rank
WF06_P	0.130	1	7.416	1
WF05_P	0.116	3	2.372	2
WF06_Q	0.109	4	2.066	3
Inter-P3	0.128	2	1.973	4
HVDC3S_Q	0.096	5	1.110	5
WF02_P	0.068	6	0.704	6
WF05_Q	0.036	7	0.506	7
WF03_P	0.023	11	0.299	8
WF02_Q	0.027	8	0.250	9
Inter-P2	0.025	10	0.145	10

In order to find the dominant features, the size of the training set is progressively increased by randomly picking the operating points from the time-series analysis until the resulted feature ranks and weights converge. Compared to conventional DSA where the size of the training set for feature selection is fixed, our approach avoids unnecessary computation thus reducing the computational burden, and also prevents overfitting.

Fig. 3.4 shows the convergence process. Observe that a sufficient accuracy is achieved after 300 iterations. Note that the stability index need to be calculated using conventional methods for all operating points used for feature selection.

3.7.2 Clustering

Self-adaptive PSO-k-means weighted clustering is used to find typical generation-load patterns. Clustering reduces the number of data points from 8760 operating points resulting from the time-series analysis to 555 and 421 clusters, for SSS and VS, respectively, which represents a dimensionality reduction of 95.2% and 93.7%, respectively.

In order to show statistically the advantage of the proposed PSO k-means algorithm over the conventional k-means, we ran the k-means and the PSO-k-means using 100 random initial seeds.

Fig. 3.2 compares the best, the average and the worst SMSE of the clustering results of the conventional k-means and the proposed self-adaptive PSO-k-means. Observe that the k-means algorithm starts from a randomly assigned cluster centroid that is normally far away from the global optimum. Therefore, the SMSE of the k-means is much larger than the PSO-k-means

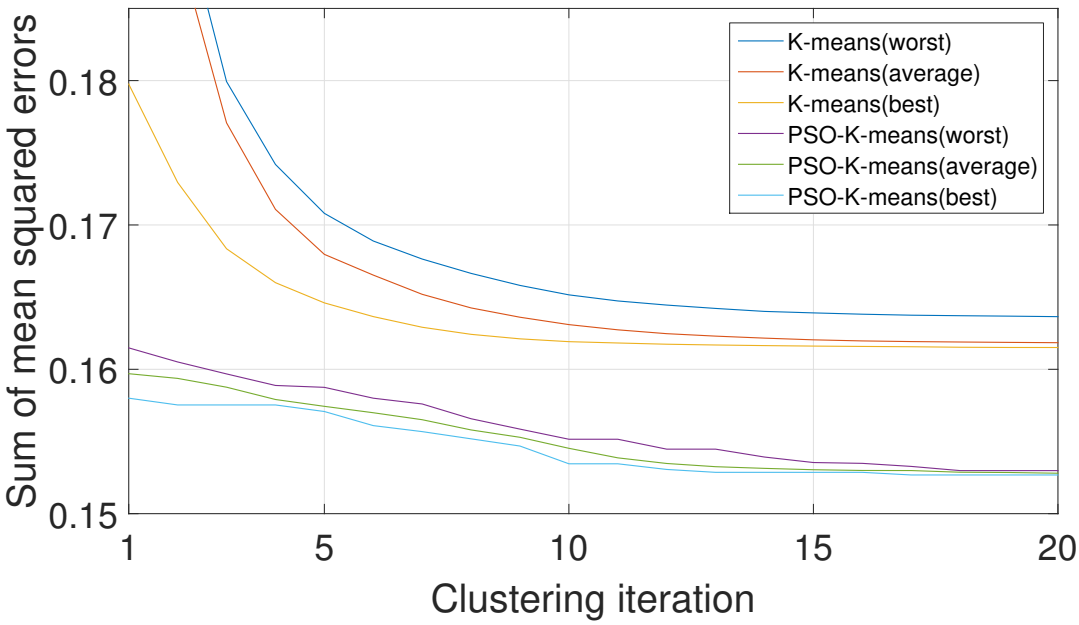

FIGURE 3.2: Comparison of the clustering results: conventional k-means vs. the proposed self-adaptive PSO-k-means.

SMSE in the first a few iterations. The PSO-k-means, on the other hand, starts with a much smaller SMSE, and has a better performance overall. The results also show that the performance of the proposed method is much more stable with a consistently better performance than the conventional k-means.

3.7.3 Small-signal Stability

For the sake of illustration, a section of the damping ratio of the inter-area oscillation mode between Areas 2 and 5 between hours 5201 and 5700 is shown in Fig. 3.3 (a), which reveals a close agreement between the fast scanning results (worst case data) and the time series analysis.

To verify that statistically, the damping ratios were calculated for 500 randomly selected operating conditions and compared with the values obtained from fast stability scanning.

Fig. 3.3 (b) compares the error distribution of the damping ratio as result of fast scanning using the conventional k-means (best case data, blue bins) and the proposed PSO-k-Means algorithm (worst case data, red bins).

Observe that the error the proposed PSO-k-means algorithm is kept below 14%, with the highest density in the 0-4% range, while for the conventional k-means, the error can be as high as 18%. The average percentage error is 3.2% to 4.5% for PSO-k-means and k-means, respectively.

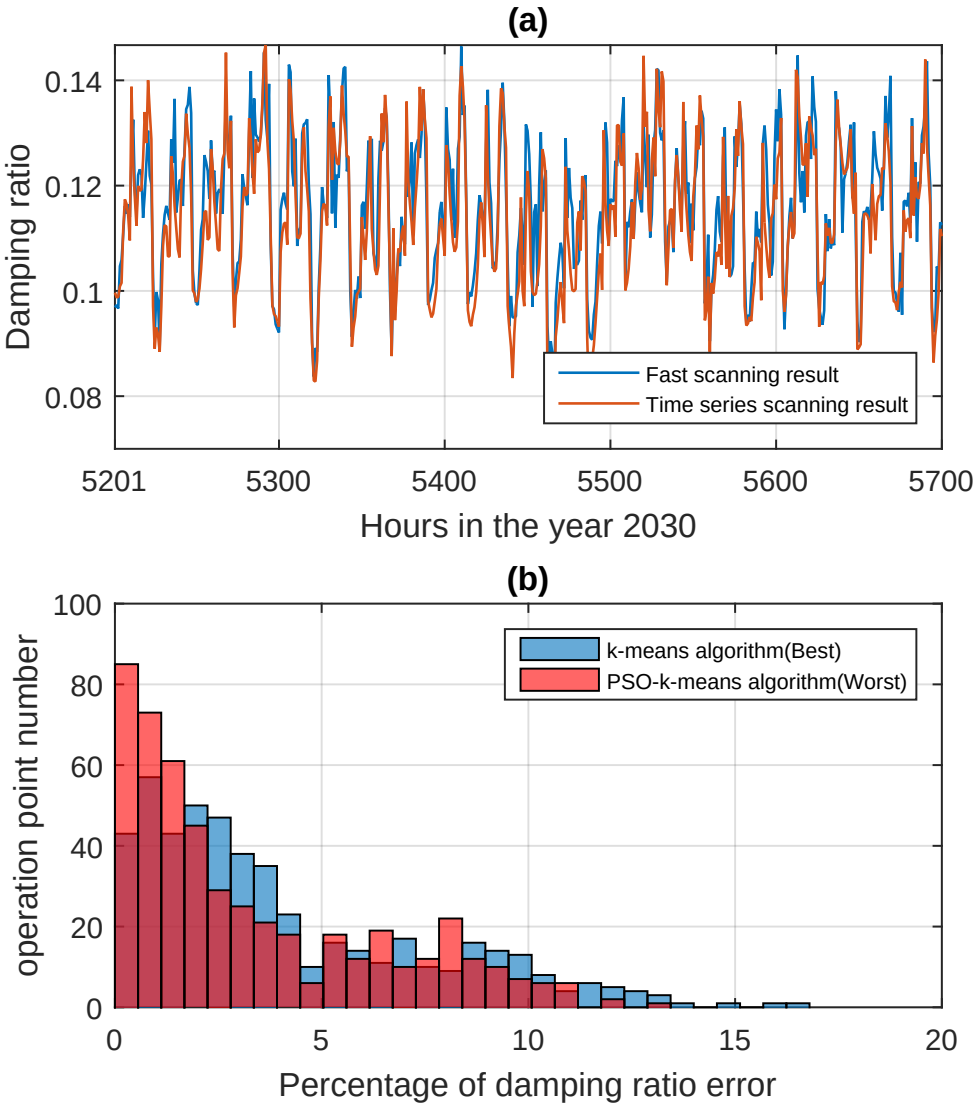

FIGURE 3.3: SSA critical damping ratio fast scanning results: (a) time series, (b) error distribution using PSO-k-means and k-means.

3.7.4 Voltage Stability

To illustrate the performance of fast stability scanning for voltage stability analysis, Fig. 3.5 (a) shows the loading margin between hours 7201 and 7700. Again, in order to verify the fast scanning accuracy, we calculated the loading margin for 500 randomly selected operating conditions and compared the results with the values obtained with fast stability scanning. Fig. 3.5 (b) compares the error distribution of the load margin using the proposed PSO-k-means (red bins) and the conventional k-means (blue bins). Observe that the error is mostly kept below 4%, with the highest density in the 0-3% range

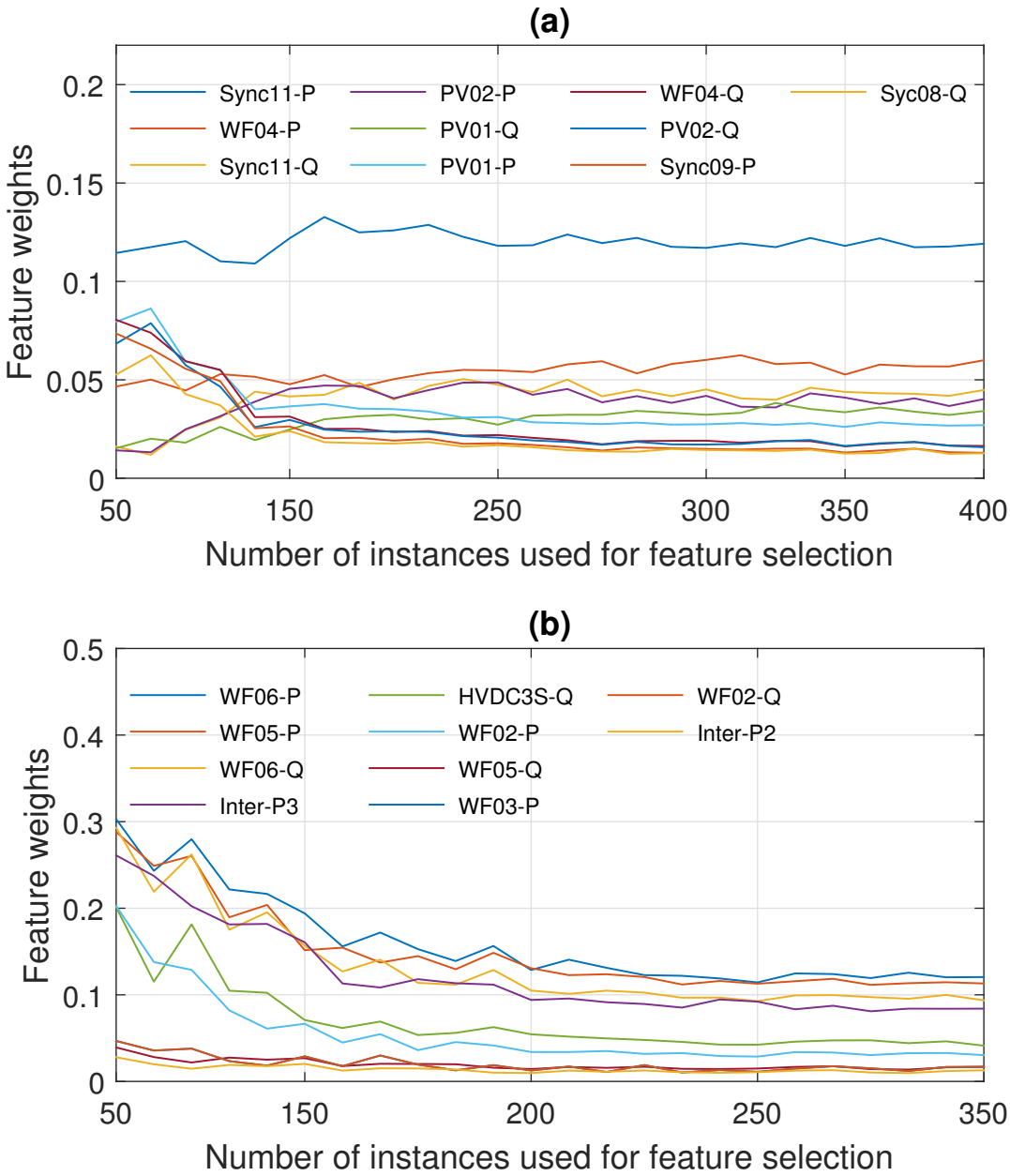

FIGURE 3.4: Convergence of feature selection: (a) SSS, (b) VS.

for the PSO-k-means.

Similar to the small-signal stability, the proposed PSO-k-means algorithm performs much better. In this case, the average percentage error decreases from 5.5% to 1.2% and the maximum error decreases from 18% to 9% compared to the conventional k-means.

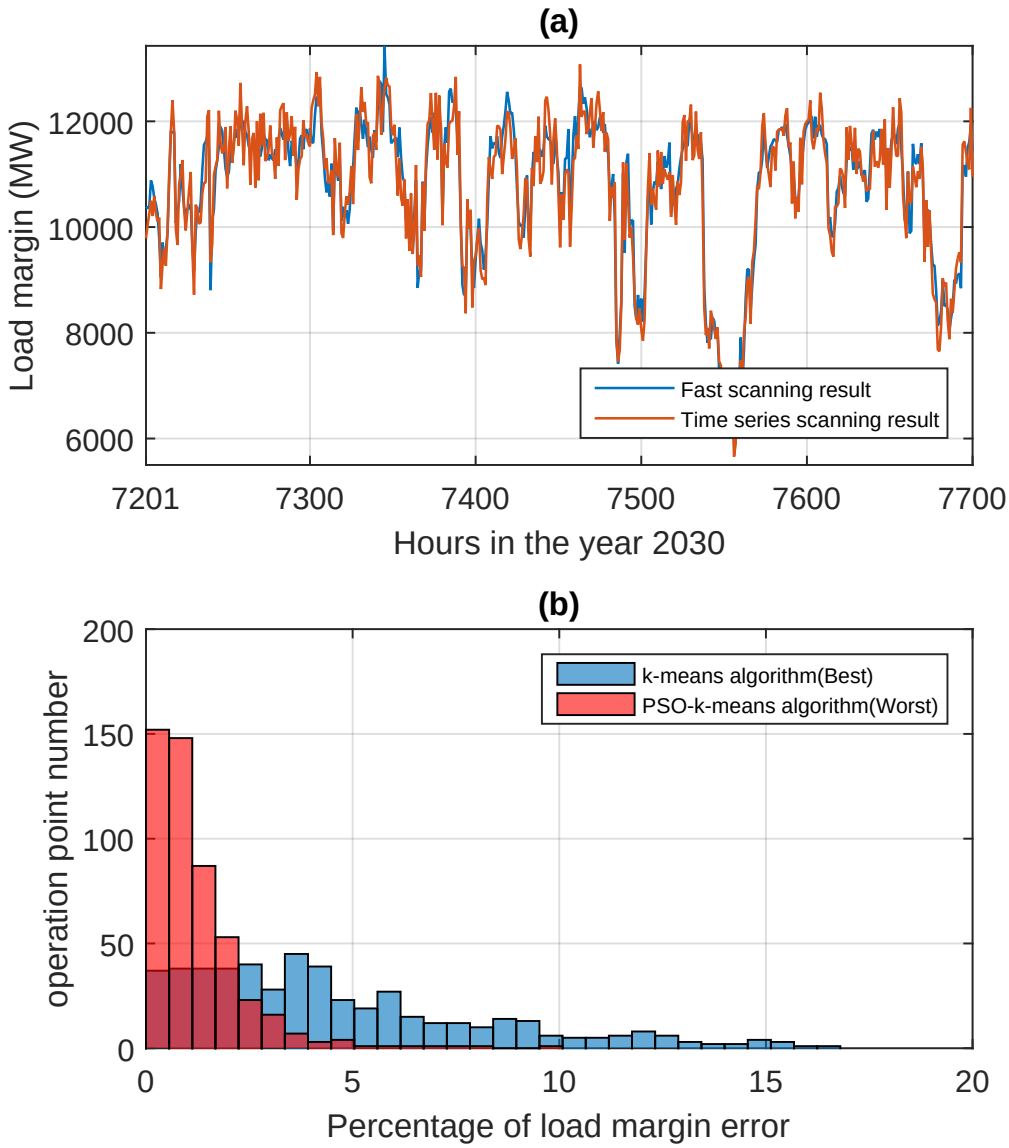

FIGURE 3.5: VSA loading margin fast scanning results: (a) time series, (b) error distribution using PSO-k-means and k-means.

3.7.5 Worst Case Operating Point Shift

Conventionally in power system planning, worst case conditions are considered when the system is the most stressed, and stability studies are conducted under these conditions. In order to clearly see the relationship between the critical damping ratio and the system generation/demand level, with the constructed inter-area oscillation mode damping ratio trace, the minimum damping ratio happens at hour 5466 in the year 2030. In Fig. 3.6, the damping ratio trace between hour 5201 and 5700 is given, total demand

in NEM of the same time slot is compared with the damping ratio. It can be observed that the minimum damping ratio does not coincide with the local maximum load level, nor the maximum load level in the year 2030, the observation of the worst case point shifting is in accordance with [101].

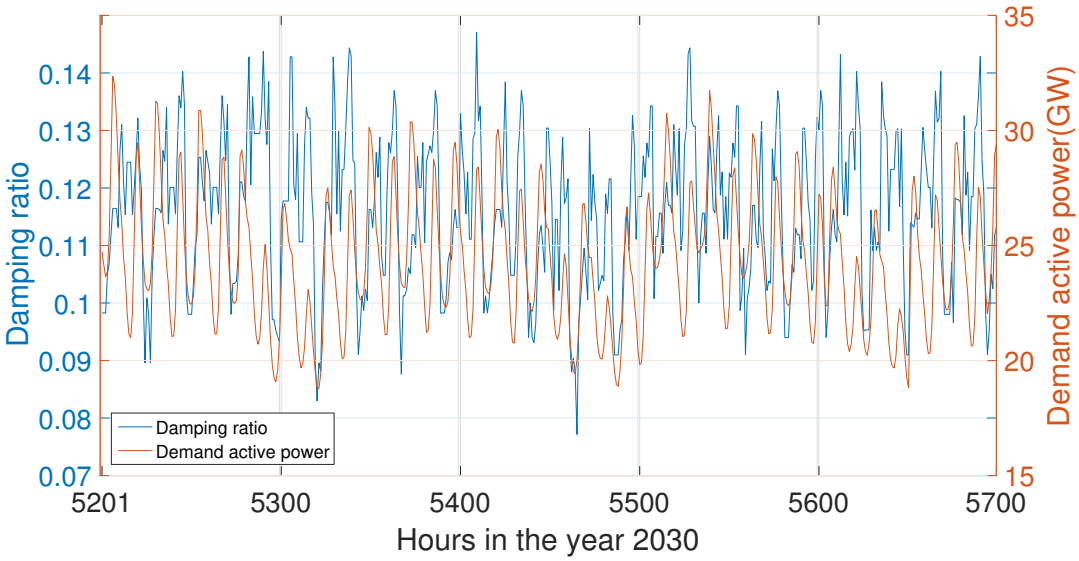

FIGURE 3.6: SSA: Critical mode damping ratio vs. demand.

Similarly, we plotted the loading margin and the total system demand for a period of 500 hours in Fig. 3.7. Observe that there is little correlation between high/low demand level and the low/high loading margin, which justifies the time series approach compared to a conventional approach where only a small number of the most critical conditions is analyzed.

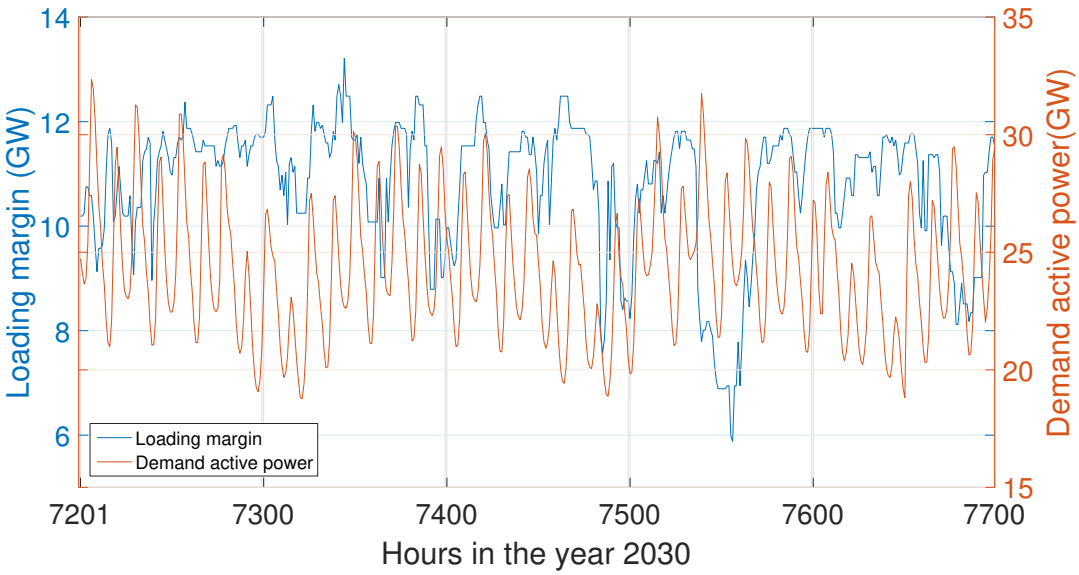

FIGURE 3.7: VSA: Loading margin vs. demand.

3.7.6 Simulation Burden of Stability Scanning

The simulations were performed on a 64-bit Xeon 2.60GHz workstation with 256GB RAM. Compared to full-time series stability analysis, the computational burden has been reduced from 220 min to 21 min and from 960 min to 90 min, for SSS and VS, respectively, which represents about a ten-fold reduction with a satisfactory accuracy. It is observed that the feature selection (30 seconds) and the clustering (5 minutes) computation does not affect the reduction of computation much.

3.8 Conclusion

Unlike the conventional power system planning that aims to find the optimal transmission and/or generation expansion plan, the future grid analysis considers scenarios that are not mere extrapolations of the existing grid. Next, to capture the intra-seasonal variation in the RES output, we need to use time series analysis as opposed to picking a small number of the most critical operating condition, as it is done conventionally. The challenge of future grid stability analysis is the sheer number of operating conditions that need to be analyzed. In this chapter, we have proposed a novel framework for fast stability scanning of future grids scenarios. The framework is based on a feature selection algorithm that makes it possible to perform clustering using both feature ranks and weights. To reduce the number of clusters, we proposed an improved self-adaptive PSO-k-means clustering technique that determines the optimal cluster number. The case study demonstrated the suitability of the proposed framework. Considering the level of detail required for future grid analysis, an acceptable accuracy is achieved with a more than a ten-fold speed-up. However, in power system operation supervised machine learning method can achieve higher accuracy for online stability assessment which is presented in the next chapter.

Chapter 4

Supervised machine Learning Method for TSA

4.1 Introduction

This chapter is based on my AUPEC paper [125] which focused on solving reliability of dynamic transient stability assessment due to power system topology change. Classification using an trained intelligent system ensemble is core of the task and it is an supervised machine learning method.

Supervised learning can be regarded as of function approximation, where basically an intelligent system is trained based on input data sets and associated responses, and in the end of the process establish function that best describes the input data sets. In the power system security assessment area, the data sets are operating conditions and contingencies, the responses are referred to the system security levels under the given operating conditions and contingencies.

4.2 Background

Dynamic security assessment provides power system operators with security information of power systems for current or imminent operating conditions considering various system topologies and contingencies. The security information is basis for preventive or emergency control to prevent systems' insecurity. Transient stability assessment is one of the most important tasks in DSA.

Unlike energy function-based methods or time-domain simulation, Intelligent systems trained via machine learning using a large number of training instances can map operating conditions to power systems' security status, which provides a much faster, versatile and easier to implement alternative

to achieve DSA. In the past 10 years, TSA using IS has attracted a lot of interest. Recent studies [48, 49, 5, 104, 126] demonstrated effectiveness of IS application in DSA.

4.2.1 Existing Studies

Decision tree is one of the most popular ISs used for TSA [48, 49]. Authors in [48] proposed a path-based DT classification method instead of the conventional node-based method. In [49], authors used both the classification tree and regression tree for transient stability and voltage stability prediction. Support vector machine is another popular tool used by researchers [50, 51]. In [50], authors used the SVM as IS for TSA and some energy-based terms as features. In [51], authors proposed a core vector machine for transient stability assessment and results showed better predictive performance in case study compared to other vector machine approaches.

Authors in [5, 6, 7] used extreme learning machine algorithm for pre-fault and post-fault online TSA. DSA application of the ELM algorithm proposed in [5] has shown to have faster learning speed compared to other ISs. Then a TSA model using an ELM-based ensemble in [6] is proposed by authors. In addition to fast and high accuracy of the ELM-based ensemble, the authors also proposed a decision-making rule, which eventually gives 100% predictive accuracy in their case studies. In study of post-fault TSA, authors in [7] used an ELM-based ensemble and proposed a new decision-making rule. The case study demonstrated feasibility of the ELM application for post-fault TSA, which requires faster learning speed than pre-fault TSA applications.

4.2.2 Motivation Behind the Study

Affecting factors that determine reliability and accuracy of an online IS-based TSA include Stability Database (SDB) for IS training, IS training algorithms, feature selection algorithms used to select effective feature set as IS inputs and stability decision-making algorithms. To cover a wide range of operating conditions, existing studies generate SDB considering different network topologies and generation-load patterns. In order to maintain high classification accuracy considering different network topologies, most of existing studies choose topology-independent variables as candidate features. However, as we will present in Section 4.6, TSA classification performance

might be unreliable due to power system topology change in some cases. Indeed, network topology change greatly increases diversity of power system operating conditions and requires IS has better differentiability.

4.3 Contribution of the Study

In this study, we aim to design a reliable and high accuracy TSA model considering various system topologies. The contributions of this study are three-fold: (i) first, from feature selection algorithm aspect, a hybrid filter-wrapper feature selection method is proposed; (ii) then, from IS training algorithm aspect, a boosting learning algorithm is used during IS training process; (iii) last, from stability decision-making algorithm aspect, an ELM-based ensemble with a new decision making rule based on weighted outputs of ELMs is proposed to achieve 100% predictive accuracy.

The rest of the chapter is organized as follows: Section 4.4 introduces the feature selection and IS used in this study; in Section 4.5 we give test system description and generation of the SDB; in Section 4.6, testing results of the proposed online transient stability assessment system and analysis of the results are given; the last section concludes this chapter.

4.4 Extreme Learning Machine Ensemble Learning and Feature Selection

4.4.1 Extreme Learning Machine Theory

Different feedforward neural networks in conjunction with the Back-Propagation (BP) learning algorithm are very popular among applications in power systems including the TSA. However, very slow learning speed of conventional feed-forward neural network due to BP weights adjustment iteration and poor generalization issue are bottlenecks in applications. Authors in [127] proposed an algorithm called Extreme Learning Machine which discarded gradient descent approach in the BP algorithm.

Cost function E of a Single hidden Layer Feedforward Neural Network (SLFN) is defined as:

$$E = \sum_{j=1}^{N} \left(\sum_{i=1}^{\tilde{N}} \beta_i \phi(w_i \cdot x_j + b_i) - t_j \right)^2, \tag{1}$$

where N is total instance (a record in an IS training set) number; $\tilde{N}$ is total hidden layer node number; β_i is weight vector of link connecting the ith hidden node and output layer nodes; $\phi()$ is activation function of the hidden layer nodes; $\boldsymbol{w_i}$ is the weight vector of link connecting input layer and the ith node in the hidden layer; $\boldsymbol{x_j}$ is the jth input vector which has N dimension; b_i is bias of the ith node in the hidden layer and t_j is the ith instance target or class identification.

Authors in [127] proved that minimize the cost function (1) is equivalent to find specific $\hat{w}_i, \hat{b}_i$ and $\hat{\beta}(i = 1, \cdots, \tilde{N})$ such that

$$\begin{aligned} &\|H(\hat{w}_1, \cdots, \hat{w}_{\tilde{N}}, \hat{b}_1, \cdots, \hat{b}_{\tilde{N}})\hat{\beta} - T\| \\ &= \min_{w_i, b_i, \beta} \|H(w_1, \cdots, w_{\tilde{N}}, b_1, \cdots, b_{\tilde{N}})\beta - T\| \,, \end{aligned} \tag{2}$$

where H is a hidden layer output matrix of a SLFN; β is a output weight matrix, and T is a class identification matrix of a set of instances. Definition for H, β and T can be found in [127].

According to the ELM theory, if a hidden layer activation function is indefinitely differentiable then one can assign random values as the hidden layer input weights and biases directly instead of adjusting the parameters via gradient descent iteration. Thus a SLFN supervised learning process is equivalent to calculating minimum-norm least-squares solution $\hat{\beta}$ in (3).

$$\hat{\beta} = H^{\dagger}T, \tag{3}$$

where $H^{\dagger}$ is the Moore-Penrose generalized inverse of matrix H.

The ELM algorithm greatly reduced training time of a SLFN neural network, which is critical for online stability assessment task. Authors have demonstrated successful application of the ELM algorithm in [5, 104, 7].

4.4.2 Feature Selection for IS

Power system operating condition is defined by a set of system variables, or features, e.g. generator powers, bus voltages, etc. Feature selection is a process of selecting a subset of most relevant features that is necessary and sufficient to describe the target concept.

Feature selection methods can be categorized as embed, filter and wrapper approach. The filter method evaluation criteria of individual feature goodness normally include correlation, distance and entropy, etc. On the other hand, the wrapper method selects an optimal subset features instead

of an individual feature depending on accuracy of trained ISs output. Generally the filter methods lead to a faster learning pipeline but individual features' random combination does not work well as the wrapper methods due to dependency of features.

4.4.2.1 Filter and Wrapper Feature Selection

As a filter type feature selection method, Relief algorithm estimates features' ability to distinguish different instances (power system operating conditions in our case), represented by features' weights [120]. Extensions of original Relief algorithm are Relief-F and RRelief-F can also deal with multi-class and regression problems, respectively. Results of the algorithm give a relative weight to each candidate feature and ranks of all features in terms of their weights.

As a wrapper type method, Sequential Floating Forward Selection (SFFS) [128] is developed based on Plus-L and Minus-R Selection (LRS) method but with flexible algorithm parameters. The SFFS method applies a number of backward steps as long as resulting subset is better than previously evaluated one after each forward step. However, heuristic methods require assessment of possible subsets via predictive accuracy and are very time consuming if a large number of candidate features exist.

4.4.2.2 Hybrid Filter-Wrapper Feature Selection

For power systems DSA application with many candidate features, the wrapper type methods are not feasible in terms of computation burden. The time complexity of heuristic feature selection methods are $O(N^2)$; where N is candidate feature number. In this study, we propose a combined filter-wrapper algorithm using the RRelief-F method to find out top weighted features out of all candidate features first, then use the SFFS to locate an optimal subset for each ELM in an IS ensemble. Due to randomness of individual ELM's parameters, the feature subsets for ELMs are different. Algorithm of the proposed method is in Algorithm 5.

Definition 2 *Let $\mathcal{R} = \{r_i \mid r_i \in \mathbb{R}^{|\mathcal{A}|}, i = 1, 2, \ldots, |\mathcal{R}|\}$ denote a steady-state power system operating condition, uniquely defined by a set of features $\mathcal{A} = \{a_i \mid r(a_i) \in [-1, 1]^{|\mathcal{R}|}, i = 1, 2, \ldots, |\mathcal{A}|\}$, where $r(a_i)$ is a normalized numerical value of feature a_i across all operating conditions. For each operating condition $r_i \in \mathcal{R}$, we compute a stability index $\lambda_i \in \mathbb{R}$. The task of feature selection is to find an optimal feature subset $\mathcal{X}$ for each ELM in IS ensemble.*

Algorithm 5 Combined feature selection algorithm

Input: Training instance $r \in \mathcal{R}$ and corresponding stability index λ.
Output: For each ELM, a set of features $\mathcal{X}_k \in \mathcal{A}$.

1: Set all w to 0;
2: **for** $i \leftarrow 1, m$ **do**
3: Randomly select instance r_i;
4: Select k instances q_j nearest to r_i;
5: **for** $j \leftarrow 1, k$ **do**
6: $n^{\text{dc}} \leftarrow n^{\text{dc}} + \text{diff}\,(\lambda(\cdot), r_i, q_j) \cdot d(r_i, q_j)$
7: **for** $l \leftarrow 1, |\mathcal{A}|$ **do**
8: $n_l^{\text{da}} \leftarrow n_l^{\text{da}} + \text{diff}\,(l, r_i, q_j) \cdot d(r_i, q_j)$
9: $n_l^{\text{dca}} \leftarrow n^{\text{dca}} +$
10: $\text{diff}\,(\tau(\cdot), r_i, q_j) \cdot \text{diff}\,(l, r_i, q_j) \cdot d(r_i, q_j)$
11: **end for**
12: **end for**
13: **end for**
14: **for** $l \leftarrow 1, a$ **do**
15: $w_l \leftarrow n^{\text{dca}}/n^{\text{dc}} - (n^{\text{da}} - n^{\text{dca}})/(m - n^{\text{dc}})$
16: **end for**
17: $\mathcal{A}_{top} \subset \mathcal{A}, \mathcal{X}_k = \emptyset, k = 0$;
18: **while** $\sigma \leq acc$ **do**
19: $\mathcal{Y}_k \leftarrow \mathcal{A}_{top} - \mathcal{X}_k$
20: $f_{ms} \leftarrow \text{argmax}_{y \in \mathcal{Y}_k}[J(\mathcal{X}_k + y)]$
21: $\mathcal{X}_k \leftarrow \mathcal{X}_k + f_{ms}$
22: $f_{ls} \leftarrow \text{argmax}_{x \in \mathcal{X}_k}[J(\mathcal{X}_k - x)]$
23: **if** $J(\mathcal{X}_k - f_{ls}) > J(\mathcal{X}_k)$ **then** $\mathcal{X}_{k+1} \leftarrow \mathcal{X}_k - f_{ls}$
24: **go to** 22
25: **else**
26: **go to** 19
27: **end if**
28: **end while**

Lines 1-12 in Algorithm 5 perform RRelief-F algorithm to find feature weight w for each candidate feature in $\mathcal{A}$. Line 13 chooses top ranked features $\mathcal{A}_{top}$ for SFFS algorithm based on feature weights. In SFFS loop (Lines 14-22), prediction accuracy σ is checked with an user defined threshold acc. Lines 15-16 find most significant feature f_{ms} within candidate features $\mathcal{Y}_k$. Lines 17-18 performs backwards evaluation to remove least significant feature f_{ls}. $J(\mathcal{X})$ performs prediction using feature subset $\mathcal{X}$ and calculate accuracy.

4.4.3 Ensemble Learning and Rule for Classification

In machine learning, an IS-based classifier has categorical output while a predictor has continuous output. We use a set of ELM-based predictors to construct an ensemble and the ensemble works as a classifier to evaluate power system OCs stability status. Each predictor gives outputs when subject to system conditions. The predictors in the ensemble must be able to reflect system properties from different aspects by ensuring diversity of the predictors. Therefore, the predictors in the ensemble normally have different outputs under same system condition and final output of the ensemble is based on all the predictors' outputs.

Ensemble learning is an effective method to significantly improve generalization of a neural network [129]. In this study, an IS ensemble has a group of ELMs, and each ELM has different parameters and input set $\mathcal{X}$ which are resulted from previous feature selection. For operating conditions applied to the ensemble, the ELMs have different outputs. Ensemble learning combines outputs of the ELMs to achieve better predictive performance comparing to a single ELM. Each ELM in an IS ensemble is called a weak predictor. In this study, we use average value of all weak predictor's outputs as gauge for operating condition stability classification.

We define transient stability status of any operating conditions as a binary class and label stable OCs with $+1$ and unstable OCs with -1. Therefore, when use the ensemble output for operating condition hard classification, threshold between stable and unstable is 0. However, to avoid misclassification we regard near zero ensemble outputs as incredible; and for operating conditions lead to incredible ensemble outputs time-domain simulation is required to determine its real stability status. In this way, overall TSA reliability and accuracy can be maintained at a high level for online implementation.

In [130] a boosting algorithm is used to train weak predictors. In boosting training algorithm, likelihood of an operating condition is used for training depends on its sampling probability. To train a set of weak predictors one after another, the boosting algorithm increases the sampling probability of those operating conditions which are misclassified by previous predictor when train the next predictor hence increase accuracy for those operating conditions. Other than using the boosting algorithm, we propose to give a weight for each weak predictor's output in calculating the ensemble output for decision making. By doing so, incredible OCs number is reduced and less time-domain simulation is required which is proved in Section 4.6. The proposed algorithm is given in Algorithm 6.

Algorithm 6 ELM ensemble classification process.

Input: Training set $\mathcal{R}_{TR} = (r_i, \lambda_i)$, Testing set $\mathcal{R}_{TE} = (r_k, \lambda_k), \lambda_i \in \lambda_{TR}, \lambda_k \in \lambda_{TE}$
Output: Classification results of testing set, λ_{result}

1: **for** $m \leftarrow 1, M$ **do**
2: $\quad p_{(1)}(m) = 1/M$
3: **end for**
4: **for** $j \leftarrow 1, N$ **do**
5: $\quad h_j \leftarrow \mathrm{ELM^t}(p_j, \mathcal{R}_{TR})$
6: $\quad \lambda_j \leftarrow \mathrm{h_j}(\mathcal{R}_{TR})$
7: $\quad \mathcal{I}_{id} \leftarrow \mathrm{Find}(\lambda_j \neq \lambda_{TR})$
8: $\quad p_{(j+1)}(\mathcal{I}_{id}) = Adj. * p_j(\mathcal{I}_{id})$
9: $\quad \lambda_j \leftarrow h_j(\mathcal{R}_{TE})$
10: **end for**
11: $\boldsymbol{\lambda} = \sum_{j=1,N}(\lambda_j \cdot w_j)/N$
12: **for** $s \leftarrow 1, M$ **do**
13: $\quad$ **if** $\lambda(s) \leq LowLimit$ **then**
14: $\quad\quad \mathcal{C}(s) \leftarrow$ Unstable
15: $\quad$ **else if** $\lambda(s) \geq HighLimit$ **then**
16: $\quad\quad \mathcal{C}(s) \leftarrow$ Stable
17: $\quad$ **else**
18: $\quad\quad \mathcal{C}(s) \leftarrow \mathrm{Simulation}(\mathcal{R}_{TE}(s))$
19: $\quad$ **end if**
20: **end for**
21: $\boldsymbol{\lambda_{result}} \leftarrow \mathcal{C}$

Operating condition set $\mathcal{R}$ and corresponding stability indices $\boldsymbol{\lambda}$ is divided into training set $\mathcal{R}_{TR}$ and testing set $\mathcal{R}_{TE}$. In the algorithm, Lines 1-2 initialize sampling probability for each operating condition in $\mathcal{R}_{TR}$. Lines 3-8 achieve boosting training for N weak predictors. The weak predictors are trained one after another using ELM method $\mathrm{ELM^t}$ and training set $\mathcal{R}_{TR}$ based on sampling probability $\boldsymbol{p}$. Lines 5-7 evaluate the trained predictor and locate misclassified operating conditions then adjust corresponding sampling probability. Line 9 calculate the ensemble output by averaging all

predictors' outputs considering user defined weights $\boldsymbol{w}$. Lines 10-17 perform proposed classification rule. User defined parameters $LowLimit$ and $HighLimit$ separate credible and incredible ensemble outputs and conduct time-domain simulation for incredible operating conditions.

4.5 Simulation Platform and Stability Database

4.5.1 The 39-bus Test System

The IEEE 39 bus New England System is a well-known benchmark power system. Researchers have been using the system for variety of studies including online TSA [104, 126]. The IEEE 39-bus system has 10 generators, 39 buses and 46 lines which consolidate a typical meshed power system. In this study, all network parameters and dynamic controller parameters are from [131].

4.5.2 Stability Database

For an intelligent system based online TSA, an accurate mapping from a given operating condition to corresponding system stability status relies on an unbiased, realistic and comprehensive stability database which is used to train the IS. Almost all existing studies emphasized importance of generation of the database [5, 48, 126]. In this chapter, we try to study how power system topology change would impact on TSA classification performance and consequently design a reliable online TSA system.

Other than a base case topology with all components in the test system in service, we consider another 10 topologies by taking different components out of service. Table 4.1 summarizes the 11 topologies we used for SDB generation.

TABLE 4.1: Test System Topologies

Topology	Out serviced	Topology	Out serviced
Base case	—	6	Generator 10
1	Lines 1 - 39	7	Generator 9
2	Lines 3 - 4	8	Generator 6
3	Lines 16 - 17	9	Generator 5
4	Lines 14 - 15	10	Generator 3
5	Lines 21 - 22		

For operating condition design, we considered 8 basic loading varying between 50% to 120% with a 10% interval using default values (base case)

from [131]. Generators proportionally supply loads based on the base case ratio. Taking into account of uncertainties in power system, around each basic loading, 20 more loading randomly generated within $\pm 20\%$ of the basic loading. The random loading variance is satisfied by distributing random increments to the generators. Thus in total we generated 160 generation-load patterns. We then conducted power flow study by applying the generation-load patterns to the 11 topologies and recorded 1760 operating conditions.

Next step is to perform time-domain simulation for each OC and record stability status(stable or unstable) when the system is subject to contingencies. The contingencies include transient three phase short circuit events on all 39 buses; fault duration is randomly generated for a specific contingency and between 100ms to 200ms. An operating condition and corresponding stability status form one sample in the SDB. In total, the stability database includes 1760*39 = 68640 instances. Instances resulted from the 11 topologies are stored in different SDBs.

In reality, for most contingencies and OCs, a power system is normally stable. Therefore, the number of stable OCs in a stability database is normally much bigger than the number of unstable OCs. To handle the class imbalance issues with the original SDB, re-sampling method presented in [132] is adopted.

4.6 Results and Analysis

In this section, we give results of feature selection, TSA classification accuracy and analyze how different methods lead to different classification accuracy. In the following case studies, one online IS ensemble-based TSA scheme is created with 30 ELMs and each ELM has 30 inputs describing an OC and one output giving corresponding transient stability status.

4.6.1 Results of Feature Selection

Candidate features for TSA normally are classified into two categories. One is pre-contingency steady-state variables such as bus voltage magnitudes, bus voltage angles, generator active powers and reactive powers, etc. Another is post-contingency variables such as rotor angles and speed trajectories, bus voltage magnitude trajectories, etc. Researchers normally use the second category variables for post-contingency stability assessment for emergency control purpose [7]. In this chapter, we focus on pre-contingency

transient stability assessment and use the first category variables as candidate features. More specifically, we included bus variables, generator rotor angles, active and reactive powers, load active and reactive powers. Conventionally these variables are considered as topology independent variables which are expected to better reflect topology change and give accurate classification result when evaluate OCs of a range of topologies [5, 104, 126, 49].

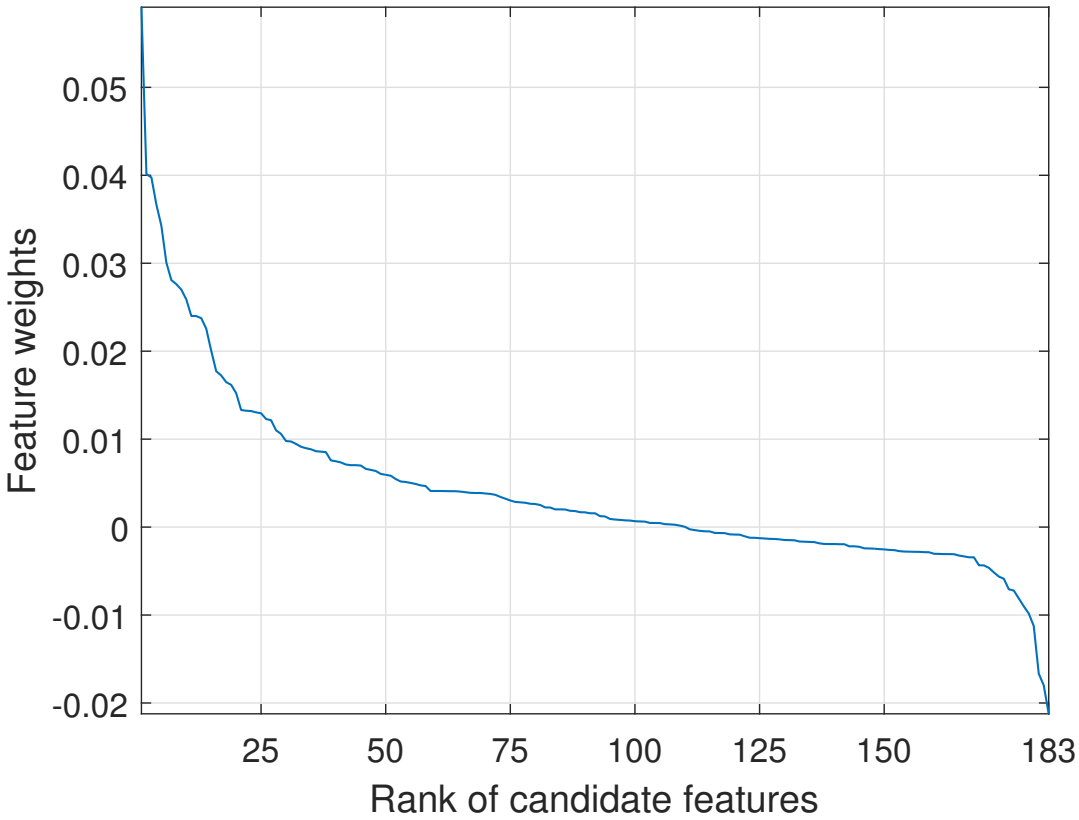

FIGURE 4.1: Ranked weights of candidate features as result of the RRelief-F feature selection.

Fig. 4.1 gives results of the RRelief-F as a filter type feature selection method. Feature weight is a gauge of correlating level between individual feature and stability status of the test system. The figure shows that majority of the candidate features have a little or negative correlation with the system stability status compared to the top 50 features.

We then use the top ranked 50 features as candidate features for the SFFS algorithm which aims to find 30 optimal feature subsets for ELMs in the ensemble as their inputs. Using 50 features instead of 183 features, the SFFS forward-backward searching process time complexity reduced from $O(183^2)$ to $O(50^2)$ which is more than 10 times reduction. We evaluate one ELM classifier using different feature sets resulted in the SFFS feature subset selection

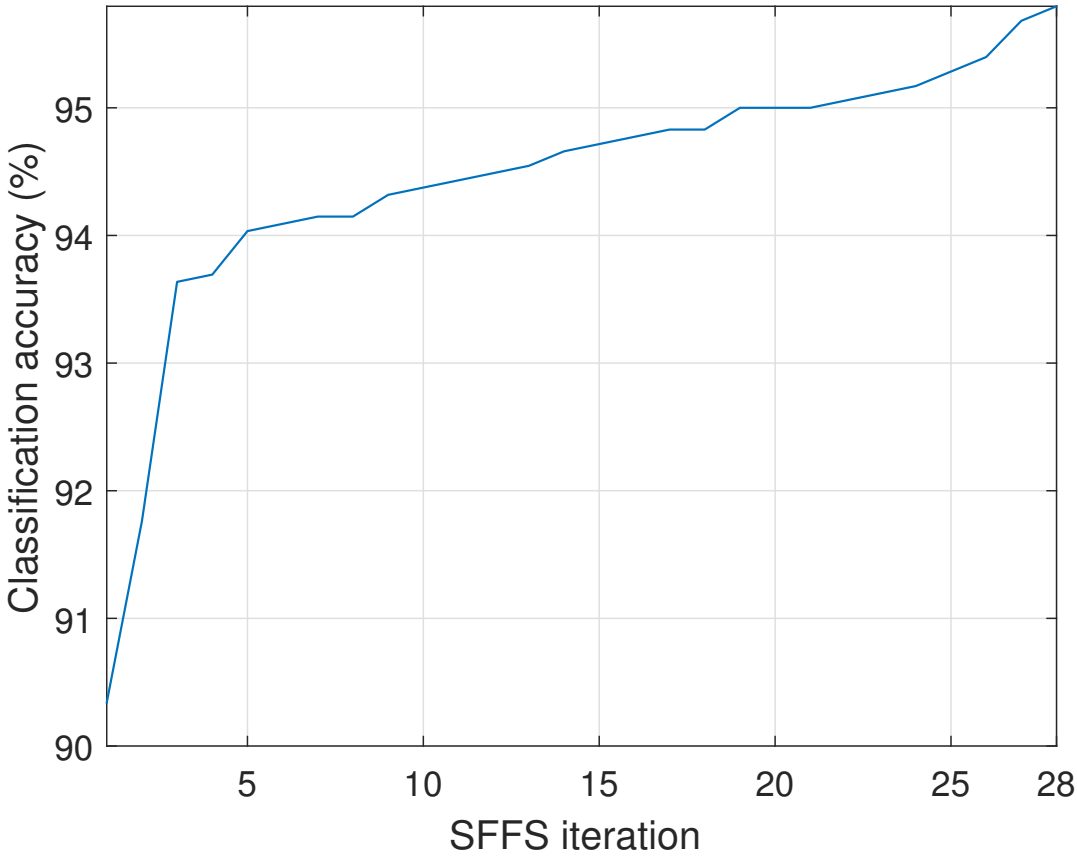

FIGURE 4.2: Classification accuracy improvement during the SFFS process.

process. Fig. 4.2 shows classification accuracy improves when feature set is refined in the SFFS process.

4.6.2 Evaluation with Different System Topologies and Contingencies

To show how system topology change impact on TSA classification performance, we first use samples in the 11 SDBs separately to train and test the ensemble, without the boosting algorithm in the process. For each ELM, 30 out of the 50 top weighted features are randomly chosen as inputs. For each contingency on 1 of 39 buses, 10-fold cross validation [133] is carried out, and average testing classification accuracy is calculated. The average testing accuracy is calculated by,

$$TS(c) = \frac{\sum_{t=1}^{11} TS^c(t)}{11}, \tag{4}$$

where $TS^c(t)$ represents classification accuracy of the TSA which is trained and tested by samples in the tth topology' SDB resulted by the cth contingency.

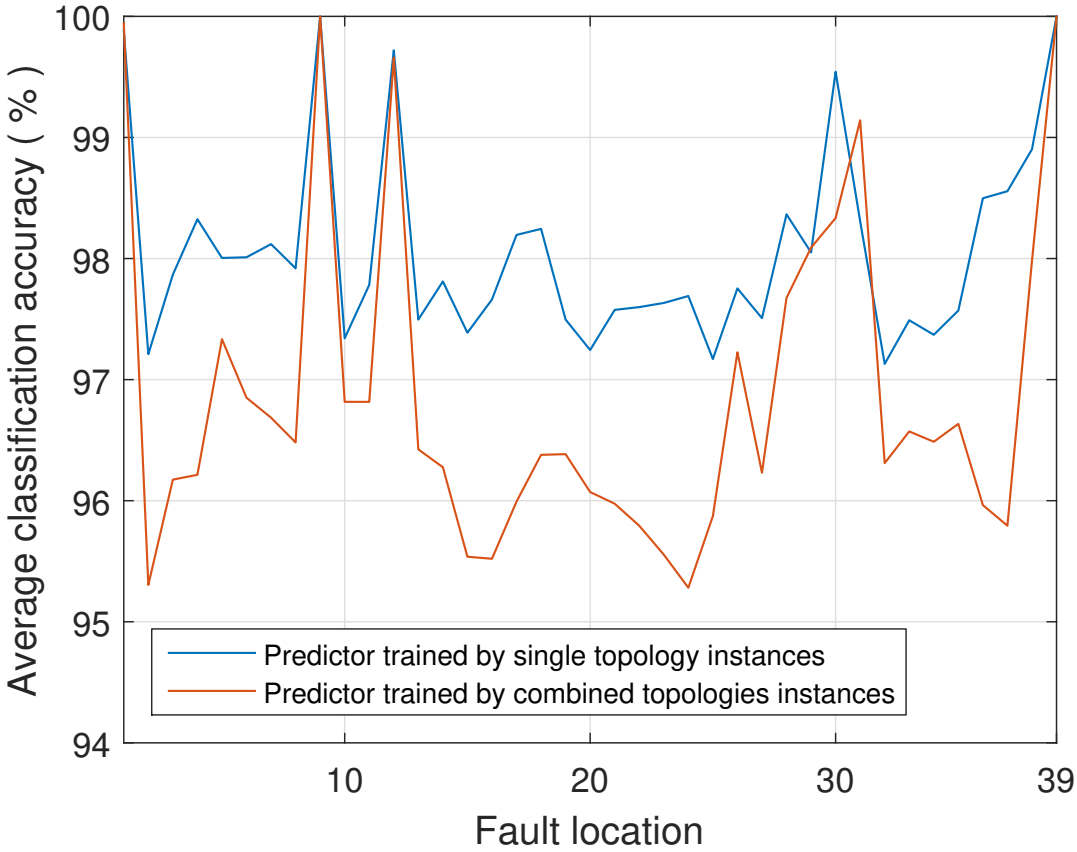

FIGURE 4.3: Classification accuracy affected by topology change.

Next, the TSA is trained and tested by using mixed samples of all topologies for each contingency. The bottom curve in Fig. 4.3 indicates that classification accuracy compared to the single topology case decreases by 1% to 3% for most of the contingencies. The result shows that TSA performance deteriorated due to topology change. In other words, if network topology changes, the TSA classification performance is not reliable despite topology independent features are used.

4.6.3 Evaluation with Hybrid Feature Selection and Boosting Algorithm

To overcome TSA performance deterioration due to topology change, We first try to improve classification accuracy by using optimal feature subsets as results from the hybrid RRelief-F + SFFS feature selection. Different to

randomly picked features, feature subset for each ELM have shown a better differentiability in the previous section. Compared to previous case, the optimal feature subsets help to improve classification accuracy by 1% in Fig. 4.4.

To further improve TSA performance and take advantage of ensemble learning, we then use the boosting technique, which enhances learning on misclassified samples in training process. Fig. 4.4 shows classification accuracy of the ELMs ensemble increases to over 99% for all contingencies, which is even better than the single topology case without boosting learning.

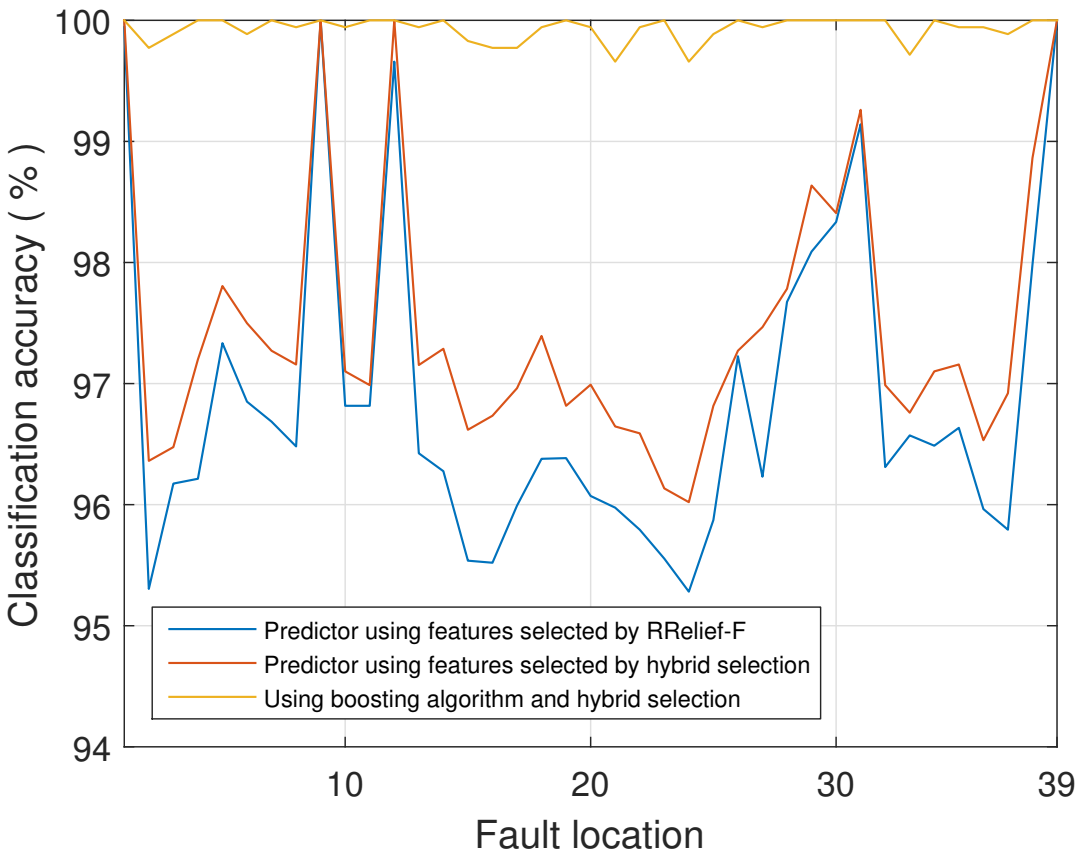

FIGURE 4.4: Classification accuracy improved by SFFS and boosting learning.

4.6.4 Decision-making for 100% Predictive Accuracy

By using combined feature selection and boosting learning, the resulted classification accuracy is over 99%, but there is a way to improve the classification accuracy further to 100% at the cost of time-domain simulation for all incredible operating conditions. We investigated all misclassified OCs resulting from the 10-fold cross-validation for the 39 bus contingencies and

classification results of these OCs are depicted in Fig. 4.5. All these results are well within a boundary between $[-0.15, +0.15]$.

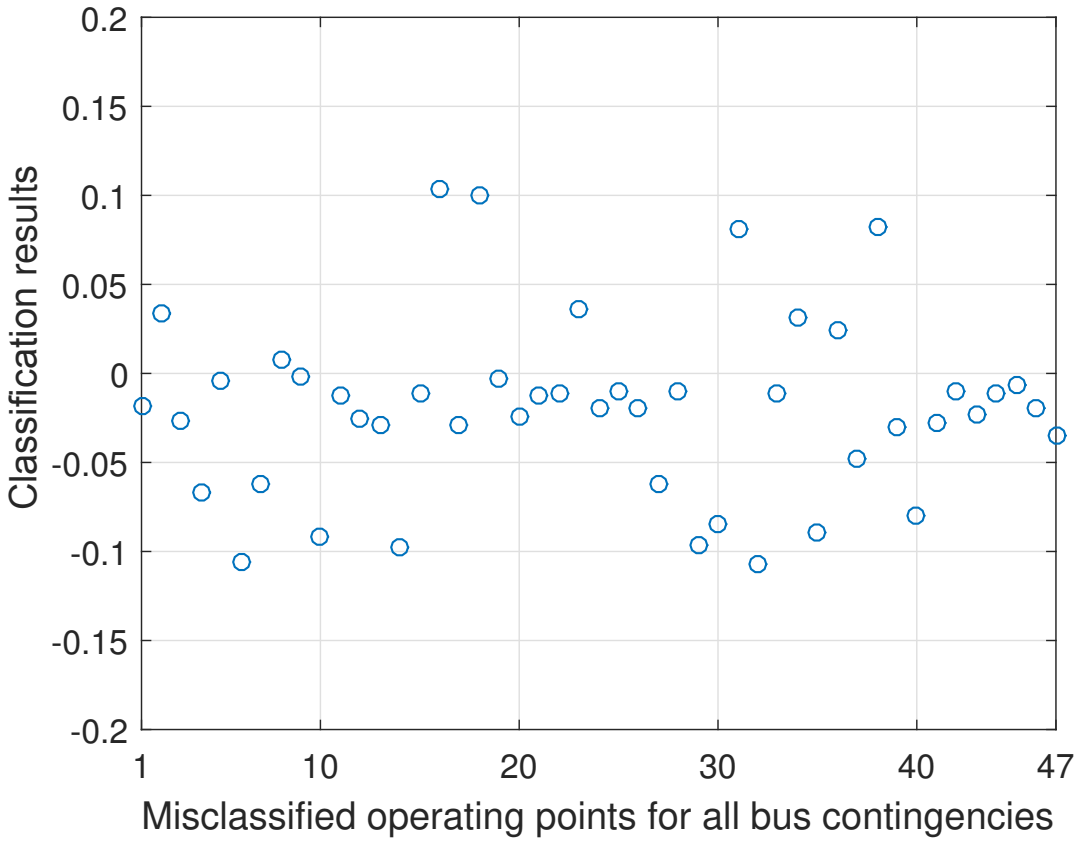

FIGURE 4.5: Prediction results of all misclassified OCs for faults on the buses.

Therefore, we change threshold of classification rule from a single boundary 0 to $[-2, -0.2]$ for unstable and $[+0.2, +2]$ for stable OCs. All the OCs with prediction results located in this incredible zone $[-0.2, +0.2]$ will have true stability status determined by time-domain simulation.

Obviously, the number of OCs within the incredible zone is more than the misclassified OC number. It is still time consuming to do time-domain simulation for all these OCs in some cases. By using weighted weak predictors outputs in the proposed Algorithm 6, we reduced number of incredible OCs and hence limited requirement of the time-domain simulation. Fig. 4.6 compares 100 OCs with IS prediction results between $[-0.3, +0.3]$ without (circles $\circ$) and with (diamonds $\diamond$) weighted outputs considered. It is clear that separation between stable and unstable OCs are increased and less OCs are in the incredible zone. Indeed, the average number of incredible OCs reduced from 98 to 22 for each contingency. Although we only give results of contingencies

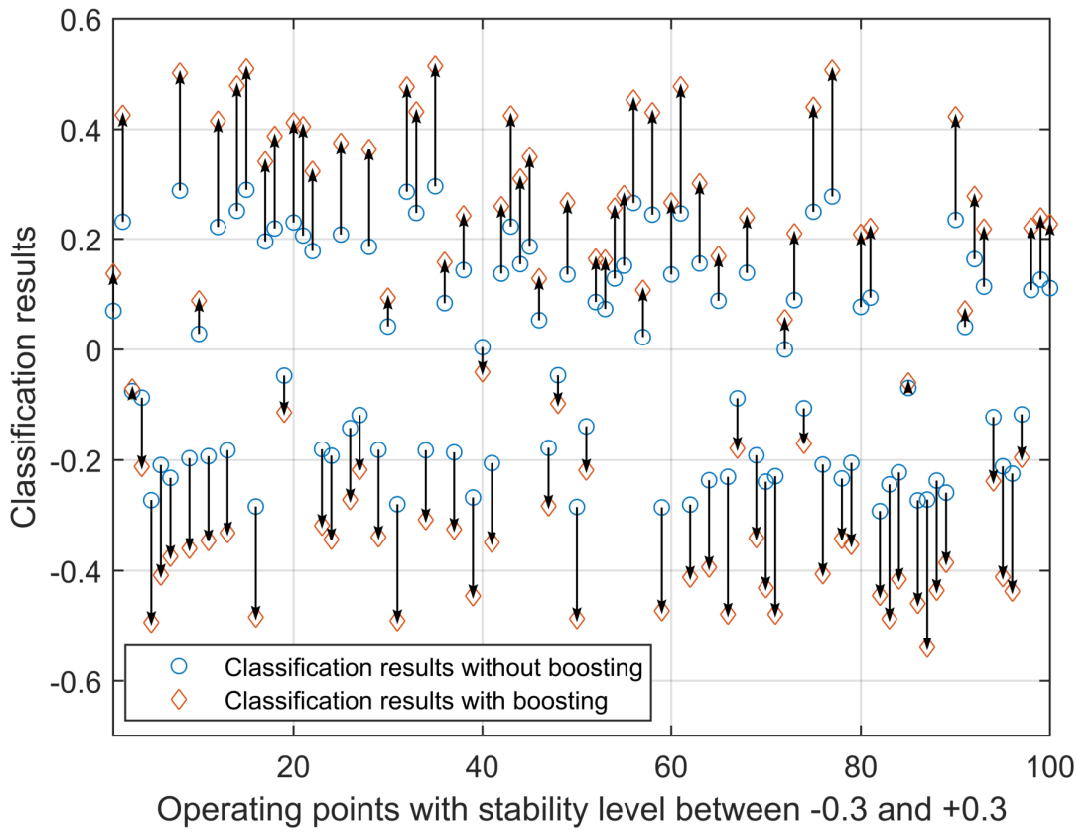

FIGURE 4.6: Ensemble classification using weighted outputs improves class separation.

on the buses in the chapter due to space limit, results for contingencies on the lines are similar.

4.7 Conclusion

In this study, for intelligent system based transient stability assessment, simulation results show that using system topology independent features as IS inputs in some cases is unreliable when system is subjected to topology change. In order to overcome classification unreliability due to topology change, we first proposed a hybrid filter-wrapper feature selection method, which helped to improve TSA classification performance when the test system is evaluated with multiple topologies. Furthermore, simulation results show that the boosting learning method in conjunction with the rule for classification we proposed based on weighted weak classifiers' output can significantly improve TSA reliability and helped to reduce time-domain simulation for achieving 100% classification accuracy.

In a process to prepare the SDB, we run time domain stability study to find stability status (label) for each OC. This step is called OC labeling. Similar to other published papers on intelligent system based DSA, supervised learning (only use labeled OC) is used to train the intelligent system which requires a large number of time domain simulation to prepare a SDB. A reliable online DSA system needs to be updated to accommodate fast changing power system operating conditions. Therefore, preparing a large SDB for timely DSA system updating becomes prohibitive. Next chapter is focusing on using semi-supervised learning (use both labeled and unlabeled OC) in online DSA framework which requires much less time consuming simulation for preparing a SDB.

Chapter 5

Semi-supervised machine Learning Method for TSA

5.1 Introduction

This chapter is based on the second journal paper [134] which focused on reducing labeled samples required for intelligent system training and maintain high accuracy of transient stability classification at the same time. Classification using an trained intelligent system ensemble is core of the task and semi-supervised machine learning method is used.

In machine learning, in between unsupervised learning and supervised learning is the semi-supervised learning algorithm. In many practical situations, the cost to get responses for given data sets or labeling is quite high, since it is often time consuming to do that. So, in the absence of responses in the majority of the data sets but present in few, semi-supervised algorithms are the best candidates for the model building. In the power system security assessment area, the data sets are operating conditions and contingencies, the responses are referred to the system security levels under the given operating conditions and contingencies.

5.2 Background

Historically, power system security assessment was based on offline time-domain simulations. With an increasing penetration of large-scale renewables, however, such as wind and solar generation, as well as distributed energy sources, such as rooftop PV, battery storage and flexible loads, power systems are becoming less predictable. Using conventional offline security assessment to achieve the same level of accuracy and reliability would significantly increase the computational burden due to an increased number of

possible operating conditions. Therefore, dynamic security assessment has emerged to properly capture the security of fast changing operating conditions. To reduce the computational burden associated with time domain simulations or energy function methods used for security assessment, machine learning is typically used to train a classifier used to classify power system operating conditions, which can be done in real time.

5.2.1 Existing Studies

Transient stability assessment is one of the most important tasks of DSA. Several recent studies [49, 50, 108, 51, 6] have demonstrated the effectiveness of different machine learning techniques for DSA. For example, in [49] decision trees are used for transient and voltage stability assessment; in [50], a support vector machine-based classifier is used for TSA; radial basis function neural network is used in [108] to assess voltage stability; in [51], a core vector machine is proposed for TSA; and a computationally efficient DSA framework based on extreme learning machines is proposed in [6].

A key feature of a classifier is its generalization ability, which refers to the ability of the classifier to give reliable and accurate predictions using previously unseen data. The generalization ability depends on the classifier's structure, the learning algorithm used, the training set size and its quality [9]. Most existing DSA studies focus on designing supervised learning algorithms to achieve more accurate and faster DSA. In supervised learning, a training set consists of a group of variables describing system conditions and the corresponding labels (security indexes in DSA). The labels are normally obtained using computationally expensive time-domain simulations. In [49], for example, 476 data points with a 3-minute resolution capturing day-ahead operating conditions are evaluated considering $181(N-k)$ contingencies, where $k \in \{2, 3, 4\}$. In order to prepare the training set for voltage and transient stability assessment using decision trees, $476 \times 181 \times 2 = 172,312$ time-domain simulations are therefore required. In [6], $6,345$ operating conditions are evaluated and $6,345 \times 100 = 6,345,000$ time-domain simulations are required for TSA considering 100 contingencies.

5.2.2 Motivation Behind the Study

To accommodate fast changing power system conditions, DSA classifier must be updated regularly to ensure its robustness, which requires generating new training samples and retraining. If retraining is done online, say,

using short-term forecasting of operating conditions, the update becomes meaningless if retraining is too slow.

Clearly, evaluating a large amount of operating conditions in order to cover a wide range of diverse operating conditions in a training set quickly becomes computationally prohibitive. Reducing the number of samples in the training set is also not an option as this would reduce the classifier's generalization ability [9].

A possible solution is to use parallel or distributed computing techniques, as suggested in [6, 135]. However, that requires either spatial or time partitioning of the problem, neither of which is trivial. It also significantly increases the hardware requirements.

5.3 Contribution of the Study

Another alternative is to use *semi-supervised learning* [10], which uses both labeled and unlabeled samples. In this study, we propose a new DSA framework based on a combination of semi-supervised learning and data editing to reduce the data noise in the learning process. To improve the generalization ability of the classifier, we use a large number of unlabeled operating conditions, which can be computed efficiently. As a result, the proposed DSA framework requires significantly less labeled operating conditions to achieve a similar generalization ability.

We use an ELM based classifier, however the proposed framework can easily accommodate other machine learning techniques. To the best of our knowledge, this is the first application of semi-supervised learning for DSA, which is the main contribution of this study.

The rest of the chapter is organized as follows: Section 5.4 reviews the machine learning techniques used in the chapter; Section 5.5 details the proposed DSA framework; the test system and the training data used in the case study are given in Section 5.6; Section 5.7 presents the results of the case study; and Section 5.8 concludes.

5.4 Review of Pertinent Machine Learning Techniques

5.4.1 Training Set Size and Generalization performance

According to the statistical learning theory, the generalization performance of a classifier is affected by the training set size and its quality, and the learning algorithm used [9]. For example, the error between the estimated network and the target function f for a common class of artificial neural networks is shown to be bounded by [136]:

$$\mathcal{O}\left(\frac{C_f^2}{n}\right) + \mathcal{O}\left(\frac{nd}{N}\ln N\right), \tag{1}$$

where n is the number of neural network nodes, and d is the input dimension of the neural network, N is the number of training observations, and C_f^2 is the first absolute moment of the Fourier magnitude distribution of f. $\mathcal{O}(\cdot)$ describes the limiting behavior of a function in term of its arguments. Similarly, the bound on the generalization error for a radial basis function neural network is [137]:

$$\mathcal{O}\left(\frac{1}{n}\right) + \mathcal{O}\left(\sqrt{\frac{nd\ln(nN) - \ln\delta}{n}}\right), \tag{2}$$

where $0 < \delta < 1$.

It is apparent from (1) and (2) that the bigger the training set size, the better the generalization performance of a classifier, as confirmed by the simulation results in Section 5.7. A possible way to reduce the size of the training set is to use semi-supervised learning, using unlabeled samples. However, this introduces data noise into the training set, which can deteriorate its quality. The next two sections discuss semi-supervised learning and data editing, which can be used to deal with erroneously labeled data points in the training set.

5.4.2 Supervised, Unsupervised and Semi-supervised Learning

Let $\mathcal{X} = \{x_i | x_i \in \mathbb{R}^{|\mathcal{A}^{\mathrm{x}}|}, i = 1, 2, \ldots, |\mathcal{X}|\}$ define a set of steady-state power system operating conditions, uniquely defined by a set of attributes

$\mathcal{A}^{\mathrm{x}} = \{a_i^{\mathrm{x}} | a_i^{\mathrm{x}} \in \mathbb{R}, i = 1, 2, \ldots, |\mathcal{A}^{\mathrm{x}}|\}$. Normally, x_i is assumed to be independently and identically distributed in $\mathcal{X}$. For each operating condition $x_i \in \mathcal{X}$, one can compute (normally by time-domain simulation) a system response $y_i \in \mathcal{Y}$, where $\mathcal{Y} = \{y_i | y_i \in \mathbb{R}^{|\mathcal{A}^{\mathrm{y}}|}, i = 1, 2, \ldots, |\mathcal{X}|\}$, and $\mathcal{A}^{\mathrm{y}} = \{a_i^{\mathrm{y}} | a_i^{\mathrm{y}} \in \mathbb{R}, i = 1, 2, \ldots, |\mathcal{A}^{\mathrm{y}}|\}$ is the set of attributes describing system response $y_i \in \mathcal{Y}$. Let $\mathcal{L} = \left\{(x_1, y_1), \ldots, (x_i, y_i), \ldots, \left(x_{|\mathcal{X}|}, y_{|\mathcal{X}|}\right)\right\}$ define a labeled training set, where a 2-tuple (ordered pair) $(x_i, y_i) \in \mathcal{L}$ is called a labeled sample. Different to time-domain simulation method, a machine learning based classifier h is used to evaluate any unlabeled sample x by assigning it a class $c \in \mathcal{C}$, $|\mathcal{C}| \in \mathbb{Z}_+$. In the context of DSA, the aim of *supervised learning* is to use the classifier h which is trained by a large labeled training set $\mathcal{L}$ to classify (label) unseen power system operating conditions (not in $\mathcal{L}$), where $h(x) \in \mathbb{R}$ and $\mathcal{C} = \{0, 1\}$. A classification rule $CR()$ is used to assign a class c to operating condition x, $c = CR(h(x))$. Assumed in our study, $h(x) > 0.9$ and $h(x) < -0.9$ assume, respectively, a stable ($c = 1$) and an unstable ($c = 0$) operating condition, while the values in between are undecided. In *unsupervised learning*, on the other hand, we use an unlabeled training set $\mathcal{U} = \mathcal{X}$ to estimate the density of distribution $\mathcal{X}$. Supervised learning has been widely used in DSA [49, 50, 108, 6, 51].

In many applications generating labeled samples is computationally expensive. In TSA, for example, it requires running time-domain simulations for a large number of operating conditions, obtained using computationally efficient power flow analysis. To improve the generalization performance of a classifier we can use semi-supervised learning using both labeled samples $\mathcal{L}$ and unlabeled samples $\mathcal{U}$. Typically, the number of unlabeled samples is much bigger than the number of the labeled samples, $|\mathcal{U}| \gg |\mathcal{L}|$.

Semi-supervised learning is based on cluster and manifold assumptions [10]. The main idea of the cluster assumption is that there is a high probability that all samples in the same cluster have the same system response. According to the manifold assumption, samples within a small neighborhood in the space of power system operating conditions $\mathcal{X}$ have a similar system response. Under these assumptions, unlabeled samples $\mathcal{U}$ are used to increase the density of the training set space, which leads to a more accurate assessment.

5.4.3 Tri-training

One of the most popular semi-supervised learning algorithms is co-training [138], which trains two classifiers separately on two independent sets of attributes of the training set. The issue with co-training is that it requires time consuming cross validation [133]. To overcome that, [139] proposed a new semi-supervised learning algorithm called tri-training, using three classifiers instead of two. After the three classifiers are trained using a small set of labeled samples, a large number of unlabeled samples is evaluated by the three classifiers. An unlabeled sample can be added to the training set used to train one classifier only if the other two classifiers agree on its classification. Unlike in co-training, the labeling confidence doesn't need to be explicitly measured.

The issue is that one classifier may get a sample with a wrong label if the other two classifiers both give wrong classification results. Samples with a wrong label are called noise, with the noise rate of a training database defined as the ratio of the number of noisy samples to the total number of samples. According to [140], even in the worse case, if a sequence of m labeled samples is drawn, classification noise rate increase due to wrongly labeled samples can be compensated if the amount of samples m satisfies:

$$m \geq \frac{2}{\varepsilon^2(1-2\eta)^2} \ln\left(\frac{2N}{\delta}\right), \tag{3}$$

where ε is the hypothesis's (in our case the classifier) worst-case classification error rate, $\eta < 0.5$ is an upper bound on the noise rate, N is the number of hypotheses, and δ is the hypothesis' confidence limit. A hypothesis H_i that minimizes the disagreement with the sequence will have the Probably Approximately Correct learning (PAC learning) property [140]:

$$\mathrm{P_r}[d(H_i, H^*) \geq \varepsilon] \leq \delta, \tag{4}$$

where probability $\mathrm{P_r}[d(\cdot)]$ is taken over all evaluation runs of the symmetric difference between the two hypothesis sets H_i and H^* (the ground-truth). In other words, (4) tells us that the probability of hypothesis H_i being within ϵ from H^* is at least $1-\delta$.

Based on the PAC learning theory [140] and the co-training algorithm proposed in [138], we summarize the tri-training criteria derivation process proposed in [139]. Let $c = 2\mu\ln(2N/\delta)$. Further, introducing μ to make the

equality in (3) hold we get:

$$m = \frac{c}{\varepsilon^2(1-2\eta)^2}. \tag{5}$$

Rearranging (5) and introducing v as a gage of the classification error depending on m and η we have:

$$v = \frac{c}{\varepsilon^2} = m(1-2\eta)^2. \tag{6}$$

It follows from (6) that the larger the sample set m and the smaller the sample noise rate η, the larger the v and the lower the classification error ε.

In the t-th iteration of the tri-training, sample noise rate $\eta^{(t)}$ is defined as:

$$\eta^{(t)} = \frac{\eta_{\mathcal{L}} \left|\mathcal{L}\right| + e^{(t)} \left|\mathcal{L}^{(t)}\right|}{\left|\mathcal{L} \cup \mathcal{L}^{(t)}\right|}, \tag{7}$$

where $\mathcal{L}$ denotes the initial labeled sample set with size $|\mathcal{L}|$, $\eta_{\mathcal{L}}$ is the labeled sample set noise, $\mathcal{L}^{(t)}$ denotes the pseudo labeled sample set, and $e^{(t)}$ denotes the upper bound of the classification error rate in the t-th iteration. Substituting (7) into (6) for the t-th and the $(t-1)$-th iterations gives:

$$u^{(t)} = \left|\mathcal{L} \cup \mathcal{L}^{(t)}\right| \left(1 - 2\frac{\eta_{\mathcal{L}} \left|\mathcal{L}\right| + e^{(t)} \left|\mathcal{L}^{(t)}\right|}{\left|\mathcal{L} \cup \mathcal{L}^{(t)}\right|}\right)^2 \tag{8}$$

and

$$u^{(t-1)} = \left|\mathcal{L} \cup \mathcal{L}^{(t-1)}\right| \left(1 - 2\frac{\eta_{\mathcal{L}} \left|\mathcal{L}\right| + e^{(t-1)} \left|\mathcal{L}^{(t-1)}\right|}{\left|\mathcal{L} \cup L^{(t-1)}\right|}\right)^2. \tag{9}$$

In order to have a decreasing classification error rate $\left(e^{(t)} < e^{(t-1)}\right)$, $u^{(t)} > u^{(t-1)}$ needs to be satisfied.

In (8) and (9) we made a few assumptions. First, $\eta_{\mathcal{L}}$ is very small since in a labeled sample set there is very little noise. Second, $\left|\mathcal{L}^{(t)}\right|$ is always bigger than $\left|\mathcal{L}^{(t-1)}\right|$. This can be guaranteed by choosing an increasing number of unlabeled samples in iterations. The last assumption is that $e^{(t)} \geq 0$ and $e^{(t-1)} < 0.5$. Therefore, if $e^{(t)} \left|\mathcal{L}^{(t)}\right| < e^{(t-1)} \left|\mathcal{L}^{(t-1)}\right|$ then $u^{(t)} > u^{(t-1)}$.

To determine if an unlabeled sample could be labeled for a classifier we require:

$$0 < \frac{e^{(t)}}{e^{(t-1)}} < \frac{\left|\mathcal{L}^{(t-1)}\right|}{\left|\mathcal{L}^{(t)}\right|} < 1. \tag{10}$$

When $\left|\mathcal{L}^{(t)}\right|$ is much bigger than $\left|\mathcal{L}^{(t-1)}\right|$ then $e^{(t)} \left|\mathcal{L}^{(t)}\right|$ may be larger than $e^{(t-1)} \left|\mathcal{L}^{(t-1)}\right|$. To avoid the situation from happening, a sub-sampling step

is used to reduce $\left|\mathcal{L}^{(t)}\right|$ by using only a subset of $\mathcal{L}^{(t)}$ and therefore ensure $e^{(t)}\left|\mathcal{L}^{(t)}\right| < e^{(t-1)}\left|\mathcal{L}^{(t-1)}\right|$. The size of $\mathcal{L}^{(t)}$ after the sub-sampling is given as:

$$\left|\mathcal{L}^{(t)}\right| = \left\lceil \frac{e^{(t-1)}\left|\mathcal{L}^{(t-1)}\right|}{e^{(t)}} - 1 \right\rceil. \tag{11}$$

5.4.4 Data Noise and Data Editing

According to the PAC learning theory, noisy samples can be used in machine learning, which is the basis for most semi-supervised algorithms [140]. A drawback of semi-supervised learning, however, is inevitable noise that comes with unlabeled samples [141], which has a negative impact on the target classifier. The tri-training algorithm uses two classifiers with an acceptable confidence to label the unlabeled samples in order to enrich the training set for the other classifier. The number of erroneously labeled samples in iterations increases since classifiers are trained by increasingly less accurate samples that only include a limited number of initially labeled samples. To address this, data editing can be used to reduce the noise introduced in the training [139]. The aim of data editing is to improve the quality of the training set by identifying and eliminating mislabeled samples prior to training the classifier [142]. The idea can also be used in semi-supervised algorithms to reduce the noise introduced in the pseudo labeling process.

In our approach, we use a data editing technique called depuration [142], in which the algorithm changes labels of erroneously labeled samples or even removes "suspicious" samples from the training set based on a well-known K-Nearest Neighbor (KNN) algorithm. In the KNN algorithm, a data imperfection is determined by using labels of k nearest neighbors of a sample x_i. If more than k', $(k+1)/2 \leq k' < k$, neighbors of x_i have the same label c, the label of sample x_i is changed to c. The algorithm is summarized in Algorithm 1. To find k nearest neighbors for x, the Euclidean distance between x and the other samples in the training set are calculated. In Cartesian coordinates, the Euclidean distance between two points x_i and x_j is defined as:

$$d(x_i, x_j) = \sqrt{\sum_{d=1}^{n} w_d (x_{id} - x_{jd})^2}, \tag{12}$$

where w_d are feature weights, and n denotes the dimensionality of the feature vector.

Algorithm 7 Depuration Data Editing.

Input: Initial labeled training set $\mathcal{L}$; Parameters k and k'.
Output: Edited training set $\mathcal{S}$.

```
1: S ← X
2: for all s ∈ S do
3:     for all c ∈ C do
4:         N ← k nearest samples in {X \ s}
5:         n_c ← Number of samples in N in class c
6:         if n_c > k' then
7:             Change class c(s) to c
8:         else if S ← {S \ s} then
9:         end if
10:    end for
11: end for
```

In this chapter, we combine tri-training and data depuration to achieve a reliable and more accurate DSA with less labeled training data compared to conventional supervised algorithms.

5.5 A New Dynamic Security Assessment Framework

A schematic diagram of the proposed DSA framework is shown in Fig. 5.1. It consists of an offline training module and an online application module. Online classifier retraining is also achievable but will not be discussed in this chapter.

The core difference of the proposed framework compared to the existing ones [49, 50, 108, 6, 51] is the training process. In conventional approaches, only labeled samples are used to train the classifier. In the proposed framework, also unlabeled samples are used to enrich the training set and data editing is used to reduce the noise introduced in the training process.

5.5.1 Training Set Generation

The training set used to train a classifier needs to be unbiased, realistic and should cover a wide range of possible operating conditions. In our study, we follow the approach proposed in [48], which is to forecast load and generation data to generate the training set for security assessment. Generator dispatch levels are obtained using a market model based on an optimal power flow.

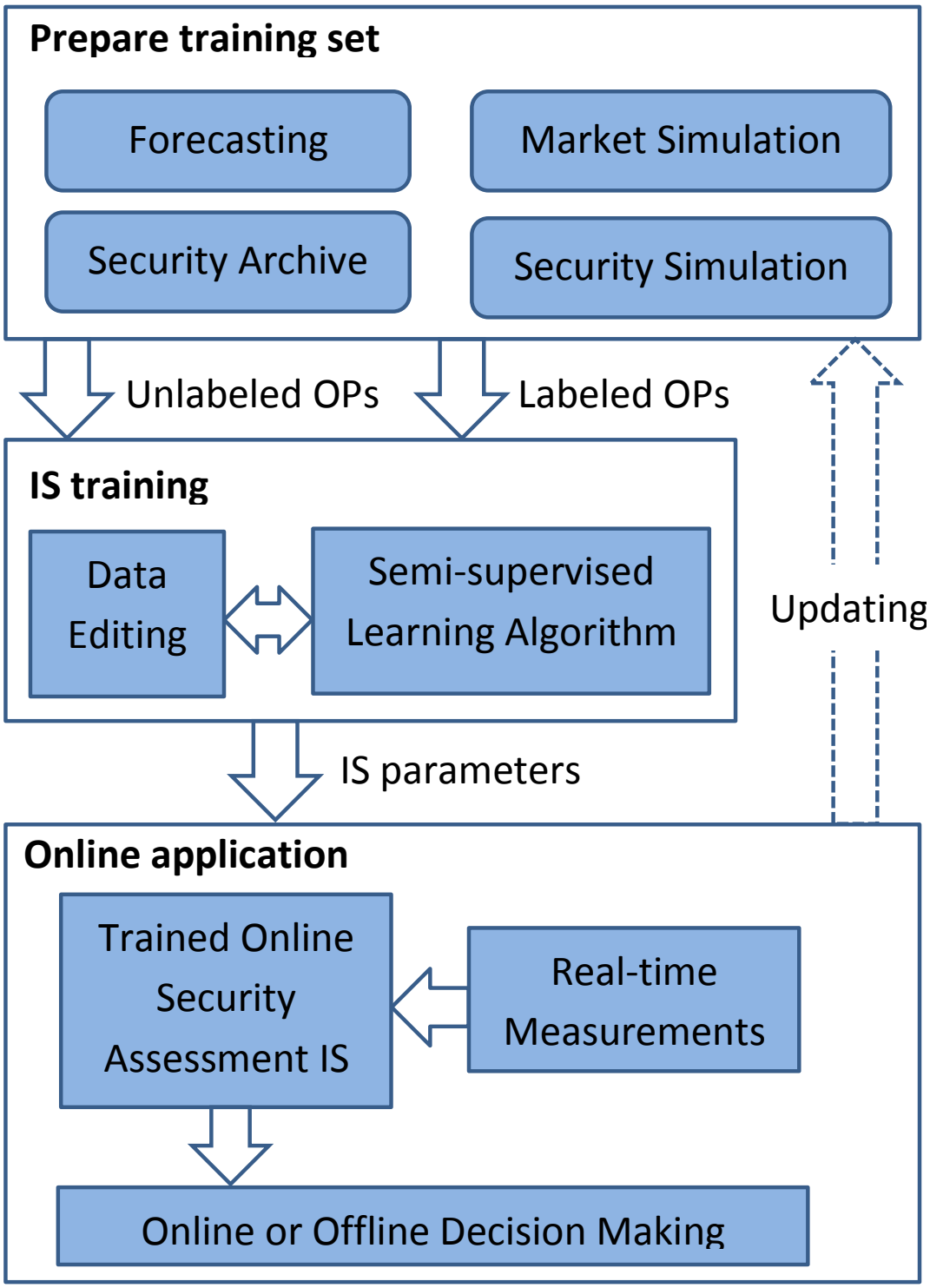

FIGURE 5.1: Block diagram of the proposed DSA framework.

5.5.2 Extreme Learning Machine Classifier

Various machine learning techniques have been used to train the classifier for DSA, including artificial neural networks, support vector machines,

and decision trees [49, 50, 108, 6, 51]. They generally exhibit good performance, however they tend to suffer from an excessive training time and a complex parameters tuning. A comparison of different classifiers is given in [5], showing that ELM have a superior computational performance and a competitively high accuracy. This can be attributed to the random assignment of weights and biases in the hidden layer, which obviates parameter tuning using gradient descent and hence increases the learning speed. ELM have been successfully applied in several DSA applications [5, 6, 7]. In the case study we use an ELM-based neural network as a classifier for TSA.

5.5.3 Feature Selection

An operating condition of a power system is defined by a set of system variables, or features, e.g. generator active and reactive powers, bus voltage magnitudes and angles, load levels, etc. Feature selection is a process of selecting a subset of relevant features that is necessary and sufficient to describe the target concept (security status in our case) by reducing the dimensionality of the input data and enhancing generalization by reducing over-fitting [120]. A popular feature selection algorithm is ReliefF [120], which is also used in this chapter. The main idea of the ReliefF algorithm is to estimate features' ability, represented by features' weights, to distinguish between instances, power system operating conditions in our case, that are near to each other. In this chapter, we use ReliefF to select the top ranked features as inputs to the ELM-based classifier. In addition to that, feature weights are used in the weighted KNN algorithm to locate the nearest neighbors for data editing.

5.5.4 Combined Tri-training and Data Editing Algorithm

We first explain how we combine the tri-training and data editing algorithms in the proposed DSA framework. Pseudo code of the proposed algorithm is given in Algorithm 8.

5.5.4.1 Initialization (lines 1-4 in Algorithm 8)

Three classifiers $(h_1, h_2$ and $h_3)$ are trained using the initial labeled training set using a conventional supervised learning algorithm (ELM in our case). Diversity of these classifiers is vital to any co-training based on semi-supervised learning. In the tri-training algorithm, the diversity is obtained by using different training sets for the three classifiers using bootstrap sampling [143].

Function $\mathrm{BootstrapSample}()$ randomly picks different training samples for the three classifiers and the classifiers are trained using function $\mathrm{Learn}()$. The classifiers will then be refined in the tri-training process.

5.5.4.2 Accuracy Evaluation (line 9 in Algorithm 8)

In each iteration, the classification error of two classifiers $h_j, h_k; j, k \in \{1, 2, 3\}$ is evaluated by function $\mathrm{MeasureErr}()$. The tri-training process continues for the other classifier $h_i; i \in \{1, 2, 3\}; i \neq j, k$ if the classification error reduces. Given that the samples are independent and identically distributed, the classification error is approximated using the labeled samples as follows:

$$\mathrm{MeasureErr}(h_j, h_k) = \frac{|\{x|c_j(x) = c_k(x) \neq c(x)\}|}{|\{x|c_j(x) = c_k(x)\}|}, \tag{13}$$

where $x \in \mathcal{L}$ and $\mathcal{L}$ is the original labeled training set; $c(x)$ is the true label of x obtained by simulation; $|\cdot|$ is cardinality of a set; the numerator is the number of samples on which h_j and h_k give the same but wrong classification result; the denominator is the number of all samples on which h_j and h_k give the same classification result.

5.5.4.3 Pseudo Labeling and Data Editing (lines 11-22 in Algorithm 8)

If performance of classifiers h_j and h_k is improved in the previous iteration, they are used to label all unlabeled samples $u \in \mathcal{U}$, where $\mathcal{U}$ is the initial unlabeled training set. Evaluation results of h_j and h_k on an unlabeled sample u are regarded as credible if their outputs are either both bigger than 0.9 (stable) or both smaller than -0.9 (unstable). If h_j and h_k both give the same credible classification for u then $(u, CR(h_j(u)))$ can be put in the training set $\mathcal{L}_i$ for the other classifier h_i. However, this might introduce noisy samples into the training set if both h_j and h_k give credible but incorrect classification.

Function $\mathrm{WtKNN}(u, \mathcal{L})$ performs a weighted KNN algorithm to find three nearest neighbors in $\mathcal{L}$ for u based on a weighted Euclidean distance. $\mathrm{NeighborLabel}$ is decided by voting on the three nearest neighbors' labels. The unlabeled sample u and its pseudo label $CR(h_j(u))$ or $CR(h_k(u))$ is put in $\mathcal{L}_i$ if the pseudo label is same as the $\mathrm{NeighborLabel}$. Otherwise, time-domain simulation function $\mathrm{SecuritySim}()$ is called to find the true label $\mathrm{TrueLabel}(u)$ and the training sets $\mathcal{L}$ and $\mathcal{U}$ are updated accordingly.

5.5.4.4 Tri-training Criteria (lines 23-33 in Algorithm 8)

The tri-training algorithm achieves a constant classification error reduction using unlabeled samples in iterations by defining the following criteria: (i) to satisfy (10), the size of the pseudo labeled training set $|\mathcal{L}_i|$ should increase constantly in iterations; (ii) the product $e_i^{(t)}|\mathcal{L}_i^{(t)}|$ should always be less than $e_i^{(t-1)}|\mathcal{L}_i^{(t-1)}|$. Therefore, if $\mathcal{L}_i^{(t)}$ is bigger than $e_i^{(t-1)}|\mathcal{L}_i^{(t-1)}|/e_i^{(t)}$ then a function $\mathrm{SubSample}()$ is used to reduce the size of $\mathcal{L}_i^{(t)}$ as defined in (11). The update flag Update_i is set and iteration continues until the criteria are not met.

5.5.4.5 Classifier Update (lines 36-41 in Algorithm 8)

For each classifier, if the update flag Update_i is set, then the classifier is retrained by the learning algorithm $\mathrm{Learn}()$ with the initial labeled training set $\mathcal{L}$ and the pseudo labeled training set $\mathcal{L}_i$. Unlike the standard tri-training algorithm, in this framework, newly labeled samples are added during the data editing process to $\mathcal{L}$ and pseudo labeled samples $\mathcal{L}_i$ are produced in the data depuration algorithm.

5.6 Simulation Platform and Stability Database

5.6.1 The 39-bus Test System

The IEEE 39-bus New England test system (Figure 5.1) is used to demonstrate the performance of the proposed framework. We consider two scenarios: a conventional one and a renewable one, in which four conventional generators(on buses B32, B33, B36 and B37) are replaced with wind farms. The purpose of using the renewable scenario is to demonstrate how an increased diversity of operating conditions due the increased penetration of intermittent renewable generation affects DSA performance. The network parameters and dynamic controller parameters are taken from [131].

5.6.2 Training Set

The 39-bus system is divided into six regions based on network coherence [144]. The load in each region is increased by $50\,\%$ compared to the base case [131], and each region is assigned an hourly load trace from [111] except the region includes generator G1 and bus B39 which represents an external network. In the renewable scenario, hourly wind traces from [111] are used to

Algorithm 8 Tri-training & Data Editing Algorithm.

Input: Labeled sample set $\mathcal{L}$; Unlabeled sample set $\mathcal{U}$.
Output: Classifiers $h_i, i \in \{1, 2, 3\}$.

```
for i ← 1 : 3 do
    L_i^(0) ← BootstrapSample(L)
    h_i ← Learn(L_i)
end for
t ← 1; e_i^(t−1) ← 0.5; L_i^(t−1) ← ∅.
while Update_i = TRUE do
    for i ← 1 : 3 do
        Update_i ← FALSE
        e_i^(t) ← MeasureError( h_j, h_k); j, k ≠ i; j, k ∈ {1, 2, 3}
        if e_i^(t) < e_i^(t−1) then
            for all u ∈ U do
                NeighborLabel ← WtKNN (u, L)
                if h_j(u), h_k(u) ≥ 0.9 ∨ h_j(u), h_k(u) ≤ −0.9 then
                    if CR(h_j(u)) = NeighborLabel then
                        L_i^(t) ← L_i^(t−1) ∪ {(u, CR(h_j(u)))}
                    else
                        TrueLabel(u) ← SecuritySim(u)
                        L ← L ∪ {(u, TrueLabel(u))}
                        U ← U \ {u}
                    end if
                end if
            end for
            if |L_i^(t−1)| = 0 then
                |L_i^(t−1)| ← ⌊ e_i^(t) / (e_i^(t−1) − e_i^(t)) + 1 ⌋
            end if
            if |L_i^(t−1)| < |L_i^(t)| then
                if e_i^(t)|L_i^(t)| < e_i^(t−1)|L_i^(t−1)| then
                    Update_i ← TRUE
                else
                    L_i^(t) ← SubSample( L_i^(t), ⌈ e_i^(t−1)|L_i^(t−1)| / e_i^(t) − 1 ⌉ )
                    Update_i ← TRUE
                end if
            end if
        end if
    end for
    for i ← 1 : 3 do
        if Update_i = TRUE then
            h_i ← Learn( BootstrapSample(L) ∪ L_i^(t) )
            e_i^(t−1) ← e_i^(t); |L_i^(t−1)| ← |L_i^(t)|
        end if
    end for
    t = t + 1
end while
```

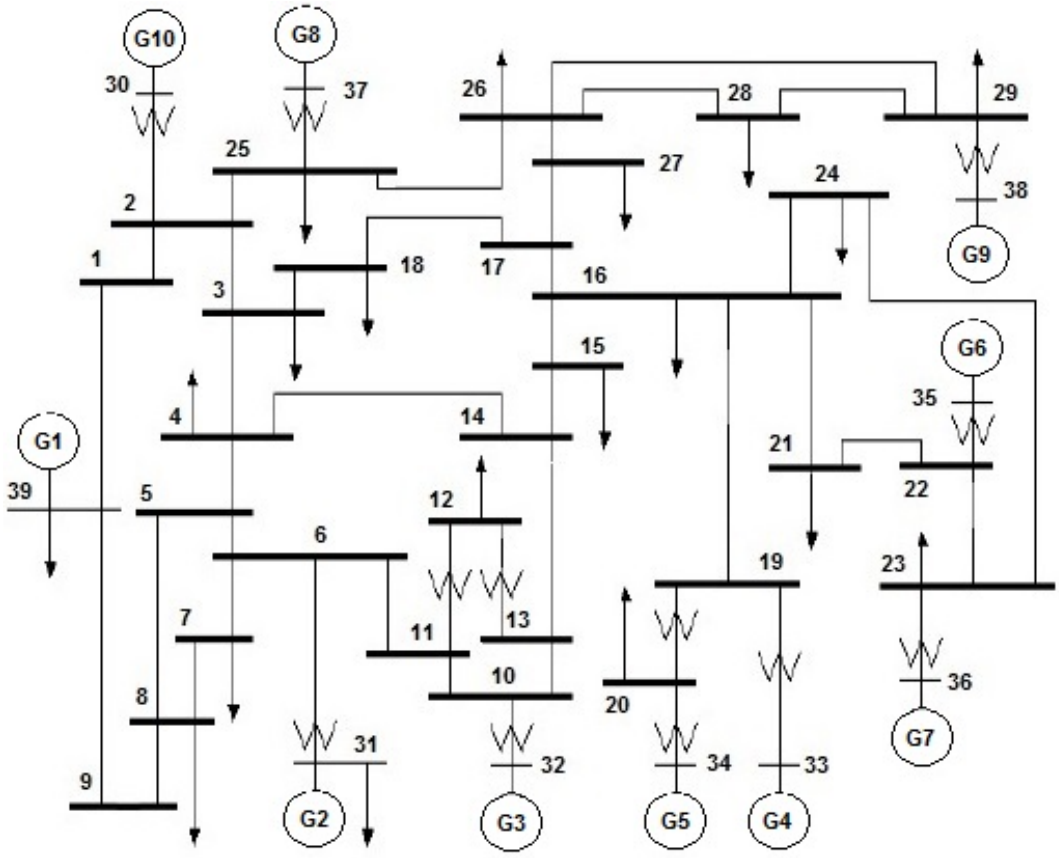

FIGURE 5.2: IEEE New-England 39 Bus System.

model the generation profile of the four wind farms. To increase the number of operating points, the 168 operating conditions representing one week are interpolated from hourly to a three-minute resolution, which gives 3360 points. To mimic load uncertainty, the three-minute load levels are modified by $\pm 20\%$ around the base case. To further increase the diversity of operating conditions, we assume ten network topologies given in Table 4.1, which yields 33600 operating points for both the conventional and the renewable scenario. A market simulation is then used to create dispatch levels for the conventional generation (wind farms are assumed to have dispatch priority). Given that the optimal power flow used in market dispatch doesn't always converge, the number of operating conditions for time domain simulations is reduced to 29698 and 30917 for the conventional and the renewable scenario, respectively. In time-domain simulations, we assume random faults (three-phase to ground short circuits), varying both the fault location (transmission line or bus) and the fault duration (between $100\,\mathrm{ms}$ to $200\,\mathrm{ms}$). For transmission line faults, the line is disconnected after the fault has been cleared.

For each time-domain simulation, the transient stability status (stable or unstable) is recorded and later used in the classification. In the case study, a subset of the labeled operating conditions is assigned to a labeled training set $\mathcal{L}$. Also, a subset of the operating conditions (not in $\mathcal{L}$) without labels is assigned to an unlabeled training set $\mathcal{U}$.

TABLE 5.1: Test System Topologies

Topology	Out of service	Topology	Out of service
Base case	—	5	Lines 21 - 22
1	Lines 1 - 39	6	Generator 10
2	Lines 3 - 4	7	Generator 9
3	Lines 16 - 17	8	Generator 6
4	Lines 14 - 15	9	Generator 5

In reality, for most contingencies and operating conditions, a power system is normally stable. Therefore, the number of stable operating conditions in the training set is normally much bigger than the number of unstable operating conditions. To handle the class imbalance, re-sampling [132] is adopted. The basic idea of re-sampling is to repeatedly use samples from a smaller class (unstable conditions in our case) during the training of the classifier.

5.7 Case Study Results and Analysis

The proposed DSA framework is suitable for transient stability, voltage stability and other online security applications. In the case study, a TSA based on the proposed DSA framework is demonstrated. To demonstrate the advantages of the proposed DSA framework, we build another TSA tool which uses conventional supervised learning algorithm and name it conventional TSA. The conventional TSA has three classifiers consisting a small ELM-based ensemble [6].

5.7.1 Results of the Feature Selection

Two categories of features are often used in DSA: pre-contingency (steady-state) variables, and post-contingency variables. In this study, we use pre-contingency variables for TSA. More specifically, we use bus voltages, generator rotor angles, active and reactive powers, load active and reactive powers as candidate features. These variables are considered topology independent, which is expected to better reflect a topology change and result in more accurate classification [104, 126].

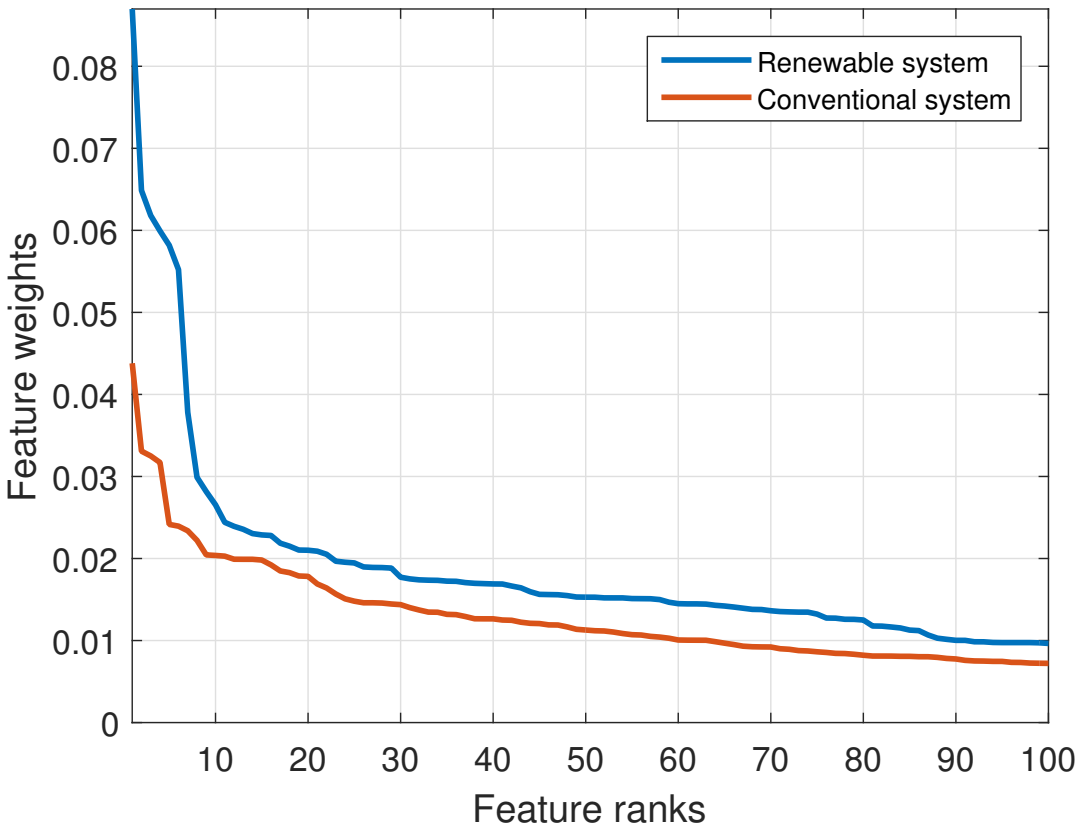

FIGURE 5.3: Top 100 features as a result of feature selection.

The results of feature selection using RRelief-F are shown in Fig. 5.3 for both the conventional and the renewable scenario. Observe that, compared to the top-ranked features, the majority of features have little correlation with the stability status as evidenced by the lower respective feature weights. To increase the diversity of the three classifiers in the tri-training algorithm, we randomly select 30 out of 50 top ranked features for each classifier as inputs to the ELM-based classifiers in the proposed DSA.

5.7.2 Impact of the Training Set Size

The conventional supervised learning based TSA is used to demonstrate how the labeled training set size $|\mathcal{L}|$ affects the classification performance. The TSA classifier is trained using different labeled training set sizes, ranging from under 1000 to more than 15000. The diversity of an ensemble of the three ELM-based classifiers is obtained, first, by selecting different features as inputs and, second, by randomly selecting weights and biases in the hidden layer. Observe in Fig. 5.4 how the the TSA performance improves when the labeled training set size becomes larger.

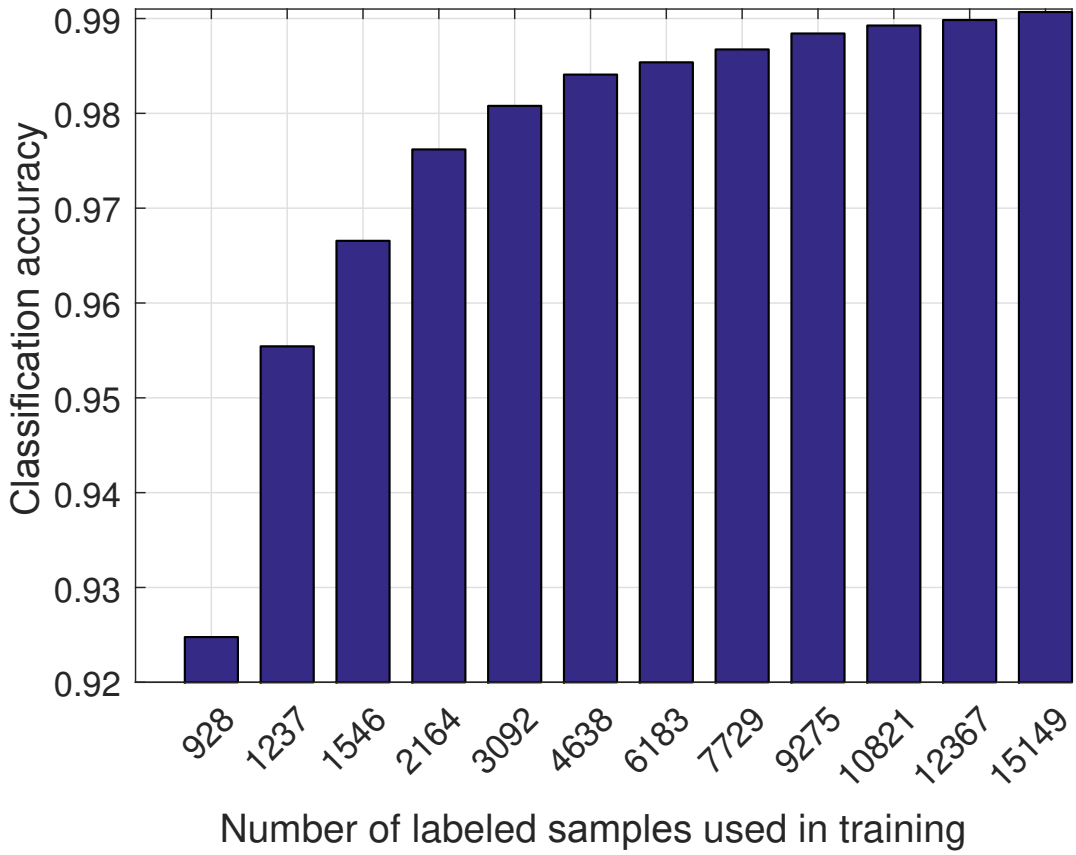

FIGURE 5.4: Classification accuracy vs the training set size.

5.7.3 Impact of the Increased Penetration of Renewables

To get a sense of the impact of the increased penetration of renewable generation on the variability of the operating conditions, Fig. 5.5 shows a comparison between the conventional and the renewable scenario showing bus voltage phase angle variances for all base case topology feasible operating conditions obtained from the power flow study. Observe that the variability is consistently larger for the renewable scenario. Two labeled training sets generated in Section 5.6.2, one for the conventional and one for the renewable scenario are used separately to train and evaluate a supervised learning based TSA. As shown in Fig. 5.6, the same training set size results in a worse classification performance for the renewable scenario. Therefore, a larger training set is required to achieve the same classification performance, which comes at a cost of an increased computational burden.

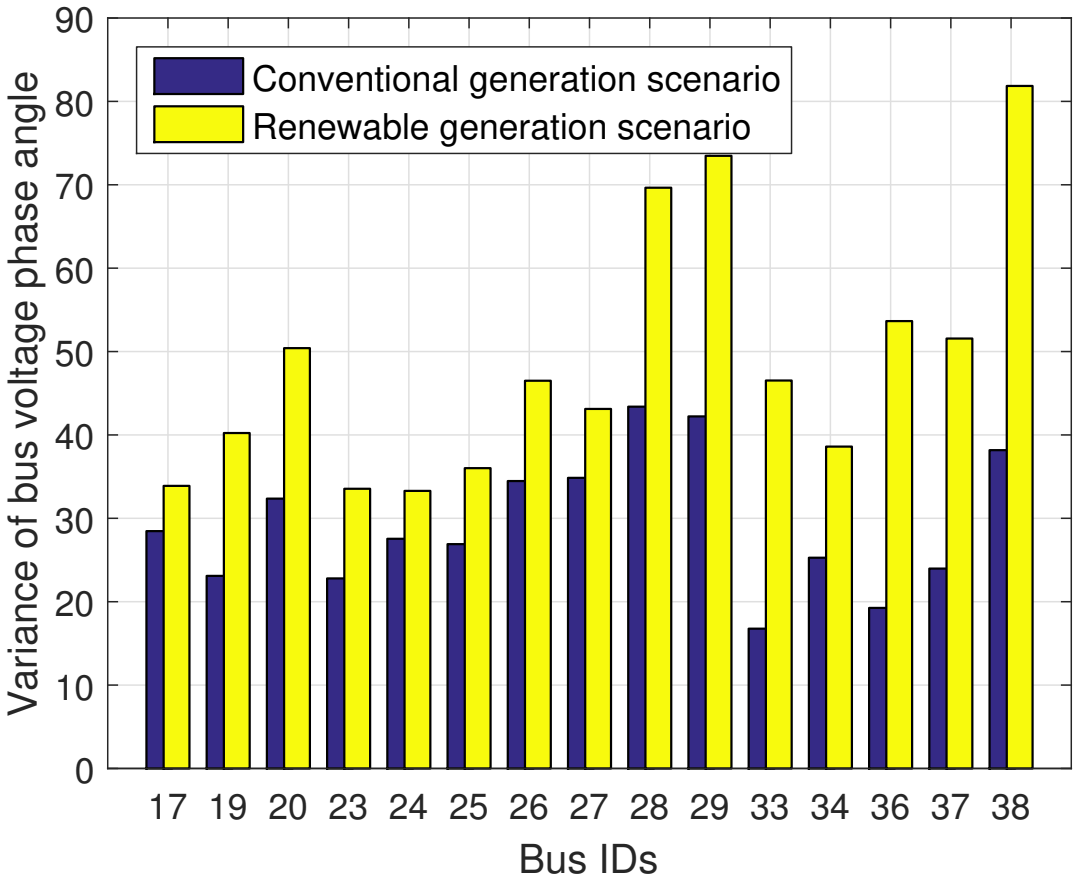

FIGURE 5.5: Bus voltage phase angle variance for the conventional and the renewable scenario.

5.7.4 Semi-supervised Learning Improves Online TSA Performance by Using Unlabeled Samples

Next we demonstrate that semi-supervised learning using tri-training algorithm can help to improve online TSA performance using unlabeled samples. Same amount of labeled samples drawn from the renewable training set are used to train the conventional TSA and the semi-supervised learning based TSA. Other than the labeled samples, a large number of unlabeled samples are also used in the tri-training process. Performance comparison of the two TSA is given in Fig. 5.8. The results show clearly advantageous of the semi-supervised learning algorithm using unlabeled samples in all cases.

5.7.5 Data Editing

In the previous section, data editing in the new TSA training is not activated and the addition of unlabeled samples in semi-supervised learning introduces noise. As shown in Fig. 5.7, the number of noisy samples in each

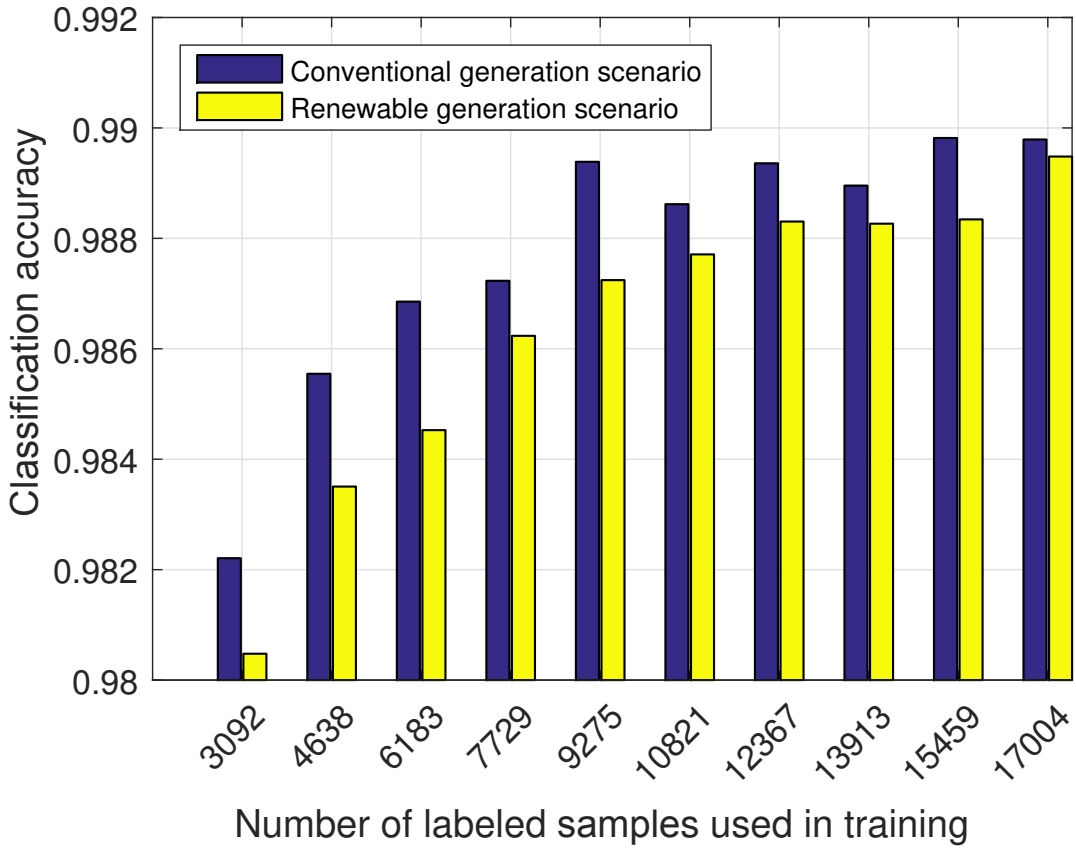

FIGURE 5.6: Comparison of the classification results for the conventional and the renewable scenarios.

iteration of the tri-training increases as progressively more unlabeled samples are added to the training set. The number of unlabeled samples in each iteration is, respectively, 308, 616, 1232, 2464, 4928, and 9856. We can observe how data editing greatly reduces the number of noisy samples in Fig. 5.7.

5.7.6 Comparison of TSA Classifiers

Now we compare the performance of the conventional TSA classifier with the TSA classifier based on the proposed DSA framework. In the data editing process, a time-domain simulation is called to find true label of an operating condition if two classifiers both give credible output but does not match the neighbor's label (Algorithm 2 lines 13 to 17). This operating condition becomes a labeled sample and is therefore put in $\mathcal{L}$ (Algorithm 2 line 18). So final number of the labeled samples used in the learning varies from the initial number of labeled samples. Starting with different numbers of labeled samples, the tri-training learning and data editing algorithm performance is evaluated first and final number of labeled samples used are recorded. Then same amount of labeled samples are used to evaluate the conventional

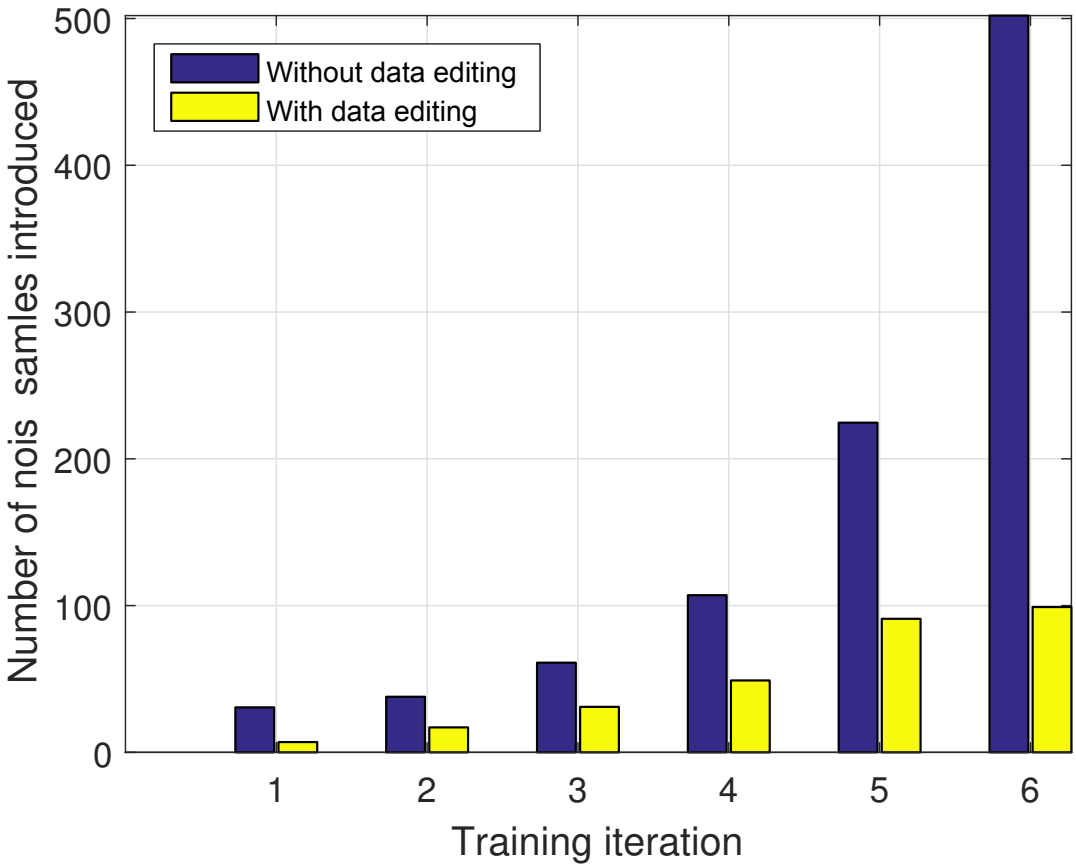

FIGURE 5.7: Comparison of the number of noisy samples per iteration in tri-training with and without data editing.

TSA and new TSA tool without data editing as in Section 5.6. The results are shown in Fig. 5.8. Observe how semi-supervised learning with data editing consistently outperforms the conventional TSA classifier. Especially for when the number of labeled samples is small, semi-supervised learning greatly increases classification performance of the new TSA model by using unlabeled samples.

5.8 Conclusion

In the case studies of this chapter, we first demonstrate how labeled training set size impacts on performance of the neural network-based TSA and penetration of renewable generation increase diversity of power system operating condition. The result is that more labeled training samples are required to achieve higher classification performance for conventional DSA tools. We then compared the classification performance of the conventional TSA tool and our new TSA tool based on semi-supervised learning. Results

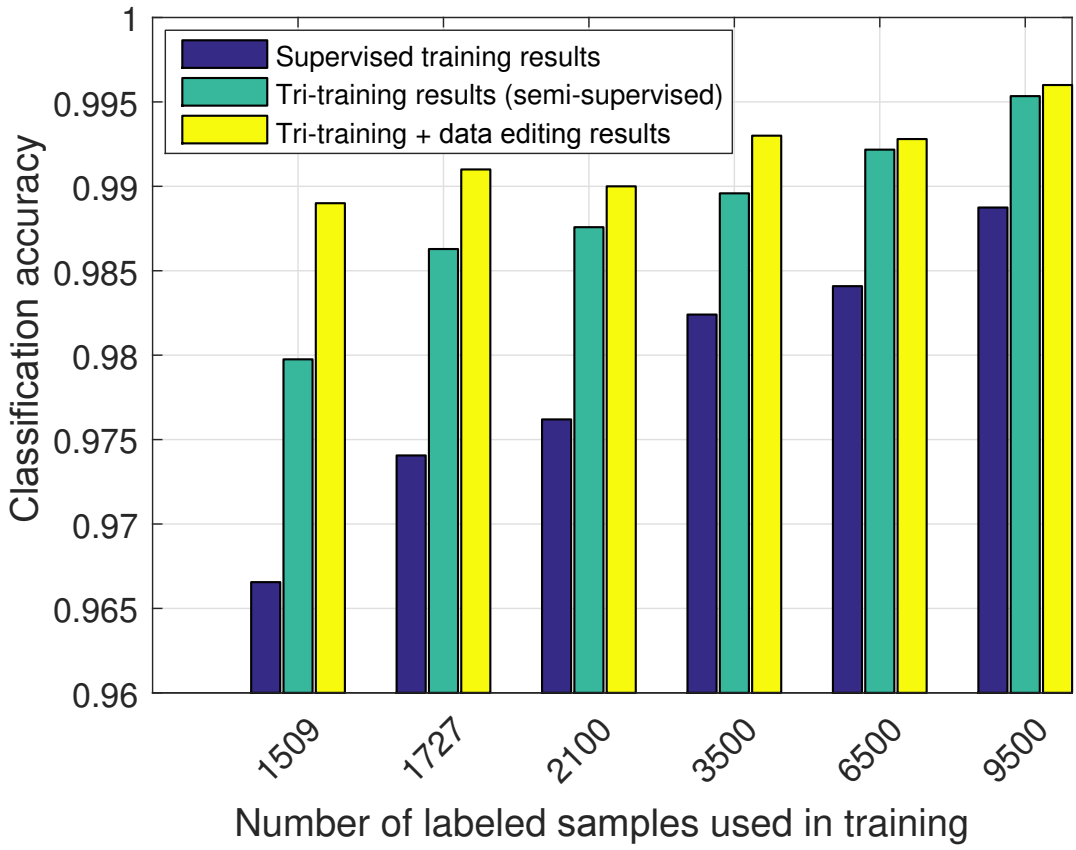

FIGURE 5.8: Compare prediction results of supervised, semi-supervised and semi-supervised with active learning algorithms.

show the new TSA requires much less labeled training samples to achieve same performance compared to the conventional TSA. Finally, we demonstrate the data editing algorithm can help to reduce the noise introduced in the semi-supervised learning process and hence lead to a better classification result. The new framework greatly reduces online simulation for the training set preparation and improves the classification performance of DSA. The new framework provides an alternative when timely DSA updating is required. We used an ELM-based neural network ensemble and tri-training algorithm in the case study, however, the idea of the semi-supervised learning-based DSA is also suitable for other machine learning approaches and different type of semi-supervised algorithms can be used.

Chapter 6

Conclusion

Planning and online dynamic security assessment of future grids using conventional tools are challenged by the new features of future grids such as intermittent generation, demand response and fast responding power electronic plants which lead to much more diverse operation conditions compared to the existing networks. In this research work, a set of comprehensive new future grids security assessment tools are proposed from security assessment in future grids planning and operation point of view.

6.1 Conclusion of the Presented Works

One of the major research aims is to propose a framework to assess the security of future grids for planning purposes by analyzing a large amount of scenarios, considering new features which are not part of the present system.

In Chapter 1, existing techniques and methods for electricity network security assessment are revisited. However, these assessment tools used for power system planning and operation are challenged by new features of future grids. Motivation and focus of the thesis are given following by methodology utilized in this study work.

Chapter 2 introduces a CSIRO project and transient stability study using conventional time-domain simulation method. The results of the stability study of a future grid model show dis-advantage of time-domain simulations.

Chapter 3 presents a novel machine learning based framework for fast stability scanning of future grids scenarios. The framework is based on a feature selection algorithm that makes it possible to perform clustering using both feature ranks and weights. The case study demonstrated the suitability of the proposed framework. Considering the level of detail required for future grid analysis, an acceptable accuracy is achieved with a more than a ten-fold speed-up.

We show that machine learning can be used to speed-up stability scanning in future grids characterized by a high penetration of variable RES. The proposed methodology can be used by future grid operators to increase the situational awareness so that they can identify potential stability issues on time and with a greater accuracy.

In Chapter 4, In order to overcome classification unreliability of an existing machine learning based DSA frame for future grids online security assessment, we first proposed a hybrid filter-wrapper feature selection method, which helped to improve TSA classification performance when the test system is evaluated with multiple topologies. Furthermore, simulation results show that the boosting learning method in conjunction with the rule for classification we proposed based on weighted weak classifiers' output can significantly improve TSA reliability and helped to reduce time-domain simulation for achieving 100% classification accuracy for a future grid.

Chapter 5 presents a semi-supervised machine learning based DSA method for future grids online security assessment. In the case studies, we first demonstrate how labeled training set size impacts on performance of the neural network-based TSA. We also show how an increased penetration of renewable generation increases the diversity of power system operating conditions. We then compared the classification performance of the conventional TSA tool and our new TSA tool based on semi-supervised learning. Results show the new TSA requires much less labeled training samples to achieve performance comparable to the conventional TSA. Finally, we demonstrate how data editing algorithm can help to reduce the noise introduced in the semi-supervised learning process, which leads to a better classification result. The new framework greatly reduces the need for online simulation for the training set preparation and improves the classification performance of DSA. The new framework provides an alternative when timely DSA updating is required in future grids online security assessment.

6.2 Suggestion for Future Work

Machine learning techniques are used in this thesis to deal with challenges brought by future grids' new features which deteriorate the performance of the existing techniques used in power system planning and operation. Due to time limitation of this research study, further works can be done to improve the study to build a set of security assessment tools for future grid planning and operation. These are itemized below.

- In order to focus on developing machine learning-based security assessment frameworks for future grid planning and operation, less effort was put on feature selection techniques in this study. Feature selection approaches used in the study are conventional. For a future grid, to find out how new features of the grid impact on the feature selection used in a machine learning based security assessment frame is important. Conventional feature selection techniques need to be revisited and developed for future grids security study.

- In the proposed un-supervised machine learning-based method for future grid fast stability scanning, clustering technique is used. The main types of unsupervised learning algorithms include clustering algorithms and association rule learning algorithms. The study didn't compare different algorithms performance in the proposed assessment framework. More work is suggested to find the most suitable algorithm to be used for fast future grids planning security assessment.

- Supervised machine learning has different algorithms, such as Nearest Neighbor, Naive Bayes, Decision Trees, Linear Regression, Support Vector Machines and Neural Networks. In this thesis, only neural networks are used in the proposed security assessment frameworks. It is suggested to test the proposed frameworks by using various algorithms.

- Classification rule is used to differentiate operating points in terms of security level. The performance of a classification rule determines the performance of the security assessment tool. More effort is suggested to develop optimal classification rules based on observing distribution of security level of operating points.

- Due to time limit, small network models are used in this study. However, a bigger network model may be used to verify the performance of the proposed security assessment tools.

Bibliography

[1] Miao He, Junshan Zhang, and Vijay Vittal. "Robust Online Dynamic Security Assessment Using Adaptive Ensemble Decision-Tree Learning". In: *IEEE Transactions on Power Systems* 28.4 (Nov. 2013), pp. 4089–4098.

[2] Ran Li et al. "Development of Low Voltage Network Templates; Part I: Substation Clustering and Classification". In: *IEEE Transactions on Power Systems* 30.6 (Nov. 2015), pp. 3036–3044.

[3] Minas C Alexiadis, Grigoris K Papagiannis, and Ioannis P Panapakidis. "Enhancing the clustering process in the category model load profiling". In: *IET Generation, Transmission & Distribution* 9.7 (Apr. 2015), pp. 655–665.

[4] Sudipta Dutta and Thomas J. Overbye. "Feature Extraction and Visualization of Power System Transient Stability Results". In: *IEEE Transactions on Power Systems* 29.2 (Mar. 2014), pp. 966–973. ISSN: 0885-8950. DOI: 10.1109/TPWRS.2013.2283276.

[5] Y. Xu et al. "Real-time transient stability assessment model using extreme learning machine". In: *IET Generation, Transmission & Distribution* 5.3 (2011), p. 314. ISSN: 17518687. DOI: 10.1049/iet-gtd.2010.0355.

[6] Yan Xu et al. "A Reliable Intelligent System for Real-Time Dynamic Security Assessment of Power Systems". In: *IEEE Transactions on Power Systems* 27.3 (Aug. 2012), pp. 1253–1263.

[7] Rui Zhang et al. "Post-disturbance transient stability assessment of power systems by a self-adaptive intelligent system". In: *IET Generation, Transmission & Distribution* 9.3 (Feb. 2015), pp. 296–305.

[8] Wouter F. Schmidt, Martin A. Kraaijveld, and Robert P.W. Duin. "Feed-forward neural networks with random weights". In: *Proceedings of the 11th IAPR International Conference on Pattern Recognition, 1992. Vol.II. Conference B: Pattern Recognition Methodology and Systems.* Vol. 2. 1992, pp. 1–4.

[9] V.N. Vapnik. "An overview of statistical learning theory". In: *IEEE Transactions on Neural Networks* 10.5 (1999), pp. 988–999. ISSN: 10459227. DOI: 10.1109/72.788640.

[10] Olivier Chapelle, Bernhard Schölkopf, and Alexander Zien. *Semi-Supervised Learning*. The MIT Press Cambridge, Massachusetts London, England, 2006.

[11] European Network of Transmission System Operators for Electricity. *Annual Report 2016*. Tech. rep. 2016.

[12] National Energy Administration. *Annual Report 2014*. Tech. rep. 2015.

[13] National Bureau of Statistics. *Annual Report 2014*. Tech. rep. 2015.

[14] China National Renewable Energy Center. *Annual Report 2014*. Tech. rep. 2015.

[15] Neil Hodge. "Energy Risks - Power Trip". In: *Emerging Risks - Special Topic* (2015).

[16] Wikipedia. *List of Major Power Outages*. 2015. URL: https://en.wikipedia.org/w/index.php?title=List_of_major_power_outages&action=history.

[17] Prabha Kundur et al. "Definition and classification of power system stability". In: *IEEE Transactions on Power Systems* 19.3 (Aug. 2004), pp. 1387–1401.

[18] I.A.Hiskens D.J.Hill. *Voltage Stability Analysis and Control*. Tech. rep. University of Newcastle, 1992.

[19] P.-A. Lof et al. "Fast calculation of a voltage stability index". In: *IEEE Transactions on Power Systems* 7.1 (1992), pp. 54–64.

[20] N Flatabo, R Ognedal, and T Carlsen. "Voltage stability condition in a power transmission system calculated by sensitivity methods". In: *IEEE Transactions on Power Systems* 5.4 (1990), pp. 1286–1293.

[21] B Gao et al. "Voltage stability evaluation using modal analysis". In: *ieeexplore.ieee.org* ().

[22] BH Chowdhury, CW Taylor IEEE Transactions on Power, and undefined 2000. "Voltage stability analysis: VQ power flow simulation versus dynamic simulation". In: *ieeexplore.ieee.org* ().

[23] R Diao et al. "Decision tree-based online voltage security assessment using PMU measurements". In: *ieeexplore.ieee.org* ().

[24] M Ramaswamy, KR Nayar International Journal of Electrical Power &, and undefined 2004. "On-line estimation of bus voltages based on fuzzy logic". In: *Elsevier* ().

[25] R Tiwari et al. "Line collapse proximity index for prediction of voltage collapse in power systems". In: *Elsevier* ().

[26] Phraba Kundur. *Power system stability and control*. McGraw Hill, 1994.

[27] H. Zhou et al. "Stacked Extreme Learning Machines". In: *IEEE Transactions on Cybernetics* 45.9 (Sept. 2015), pp. 2013–2025. ISSN: 2168-2267. DOI: 10.1109/TCYB.2014.2363492.

[28] Yousin Tang and A. P. S. Meliopoulos. "Power system small signal stability analysis with FACTS elements". In: *IEEE Transactions on Power Delivery* 12.3 (July 1997), pp. 1352–1361. ISSN: 0885-8977. DOI: 10.1109/61.637014.

[29] S. Q. Bu et al. "Probabilistic Analysis of Small-Signal Stability of Large-Scale Power Systems as Affected by Penetration of Wind Generation". In: *IEEE Transactions on Power Systems* 27.2 (May 2012), pp. 762–770. ISSN: 0885-8950. DOI: 10.1109/TPWRS.2011.2170183.

[30] J. Ma, Z. Y. Dong, and P. Zhang. "Comparison of BR and QR Eigenvalue Algorithms for Power System Small Signal Stability Analysis". In: *IEEE Transactions on Power Systems* 21.4 (Nov. 2006), pp. 1848–1855. ISSN: 0885-8950. DOI: 10.1109/TPWRS.2006.883685.

[31] J. M. Campagnolo, N. Martins, and D. M. Falcao. "An efficient and robust eigenvalue method for small-signal stability assessment in parallel computers". In: *IEEE Transactions on Power Systems* 10.1 (Feb. 1995), pp. 506–511. ISSN: 0885-8950. DOI: 10.1109/59.373977.

[32] J Guckenheimer and P Holmes. *Nonlinear oscillations, dynamical systems, and bifurcations of vector fields*. 2013.

[33] R Seydel. *Practical bifurcation and stability analysis*. 2009.

[34] P. C. Magnusson. "The Transient-Energy Method of Calculating Stability". In: *Transactions of the American Institute of Electrical Engineers* 66.1 (Jan. 1947), pp. 747–755. ISSN: 0096-3860. DOI: 10.1109/T-AIEE.1947.5059502.

[35] P.D. Aylett. "The energy-integral criterion of transient stability limits of power systems". In: *Proceedings of the IEE Part C: Monographs* 105.8 (1958), p. 527. ISSN: 03698904. DOI: 10.1049/pi-c.1958.0070.

[36] AH El-Abiad et al. "Transient stability regions of multimachine power systems". In: *ieeexplore.ieee.org* ().

[37] David J. Hill. *CSIRO Future Grid Flagship Cluster Project 1: Power and Energy Systems Modelling and Security*. Tech. rep. The University of Sydney, 2013.

[38] Hsiao-Dong Chang, Chia-Chi Chu, and G. Cauley. "Direct stability analysis of electric power systems using energy functions: theory, applications, and perspective". In: *Proceedings of the IEEE* 83.11 (1995), pp. 1497–1529. ISSN: 00189219. DOI: 10.1109/5.481632.

[39] Y. Xue et al. "Extended equal area criterion revisited (EHV power systems)". In: *IEEE Transactions on Power Systems* 7.3 (1992), pp. 1012–1022. ISSN: 08858950. DOI: 10.1109/59.207314.

[40] Z Dong and P Zhang. *Emerging techniques in power system analysis*. 2010.

[41] HongJun Fu XueYong Hou Ping Ju. "Power System Static Voltage Probabilistic Stability Analysis based on Two Point Estimation". In: *Hohai University, China* (Mar. 2010).

[42] Po-Chen Chen et al. "Analysis of Voltage Profile Problems Due to the Penetration of Distributed Generation in Low-Voltage Secondary Distribution Networks". In: *IEEE Transactions on Power Delivery* 27.4 (Oct. 2012), pp. 2020–2028. ISSN: 0885-8977. DOI: 10.1109/TPWRD.2012.2209684.

[43] E. Haesen et al. "A Probabilistic Formulation of Load Margins in Power Systems With Stochastic Generation". In: *IEEE Transactions on Power Systems* 24.2 (May 2009), pp. 951–958. ISSN: 0885-8950. DOI: 10.1109/TPWRS.2009.2016525.

[44] Zhao Yang Dong et al. "Using IS to Assess an Electric Power System's Real-Time Stability". In: *IEEE Intelligent Systems* 28.4 (July 2013), pp. 60–66. ISSN: 1541-1672. DOI: 10.1109/MIS.2011.41.

[45] Kip Morison, Mevludin Glavic, et al. *Review of on-line dynamic security assessment tools and techniques*. Tech. rep. CIGRE, 2007.

[46] N. Balu et al. "On-line power system security analysis". In: *Proceedings of the IEEE* 80.2 (1992), pp. 262–282. ISSN: 00189219. DOI: 10.1109/5.123296.

[47] Yan Xu et al. "An Intelligent Dynamic Security Assessment Framework for Power Systems With Wind Power". In: *IEEE Transactions on Industrial Informatics* 8.4 (Nov. 2012), pp. 995–1003. ISSN: 1551-3203. DOI: 10.1109/TII.2012.2206396.

[48] Kai Sun et al. "An Online Dynamic Security Assessment Scheme Using Phasor Measurements and Decision Trees". In: *IEEE Transactions on Power Systems* 22.4 (Nov. 2007), pp. 1935–1943. ISSN: 0885-8950. DOI: 10.1109/TPWRS.2007.908476.

[49] Ruisheng Diao, Vijay Vittal, and Naim Logic. "Design of a Real-Time Security Assessment Tool for Situational Awareness Enhancement in Modern Power Systems". In: *IEEE Transactions on Power Systems* 25.2 (May 2010), pp. 957–965. ISSN: 0885-8950. DOI: 10.1109/TPWRS.2009.2035507.

[50] Janath Geeganage et al. "Application of Energy-Based Power System Features for Dynamic Security Assessment". In: *IEEE Transactions on Power Systems* 30.4 (July 2015), pp. 1957–1965.

[51] Bo Wang et al. "Power System Transient Stability Assessment Based on Big Data and the Core Vector Machine". In: *IEEE Transactions on Smart Grid* (2016), pp. 1–1. ISSN: 1949-3053. DOI: 10.1109/TSG.2016.2549063.

[52] Australian Energy Market Operator Limited. *100 per cent renewable study - modelling outcomes | Department of the Environment and Energy*. Tech. rep. AEMO, 2013, pp. 1–111.

[53] Matthew Wright and Patrick Hearps. *Zero carbon Australia stationary energy plan*. Tech. rep. University of Melbourne, 2010.

[54] Ben Elliston, Mark Diesendorf, and Iain MacGill. "Simulations of scenarios with 100% renewable electricity in the Australian National Electricity Market". In: *Energy Policy* 45 (2012), pp. 606–613.

[55] Elaine K. Hart and Mark Z. Jacobson. "A Monte Carlo approach to generator portfolio planning and carbon emissions assessments of systems with large penetrations of variable renewables". In: *Renewable Energy* 36.8 (Aug. 2011), pp. 2278–2286. ISSN: 0960-1481. DOI: 10.1016/J.RENENE.2011.01.015.

[56] A Schwarzenegger. "Research Evaluation of Wind GENERATION, Solar Generation, AND Storage Impact on the California Grid". In: (2010).

[57] MCW Kintner-Meyer, PJ Balducci, and WG Colella. "National assessment of energy storage for grid balancing and arbitrage: Phase 1, WECC". In: (2012).

[58] P Denholm, M Hand Energy Policy, and undefined 2011. "Grid flexibility and storage required to achieve very high penetration of variable renewable electricity". In: *Elsevier* ().

[59] Ben Elliston, Iain MacGill, and Mark Diesendorf. "Least cost 100% renewable electricity scenarios in the Australian National Electricity Market". In: *Energy Policy* 59 (Aug. 2013), pp. 270–282. ISSN: 0301-4215. DOI: 10.1016/J.ENPOL.2013.03.038.

[60] Cory Budischak et al. "Cost-minimized combinations of wind power, solar power and electrochemical storage, powering the grid up to 99.9% of the time". In: *Journal of Power Sources* 225 (Mar. 2013), pp. 60–74. ISSN: 0378-7753.

[61] I.G. Mason, S.C. Page, and A.G. Williamson. "A 100% renewable electricity generation system for New Zealand utilising hydro, wind, geothermal and biomass resources". In: *Energy Policy* 38.8 (Aug. 2010), pp. 3973–3984. ISSN: 0301-4215. DOI: 10.1016/J.ENPOL.2010.03.022.

[62] EirGrid and System Operator for Northern Ireland (SONI). *Clean Energy Solutions Center | All Island TSO Facilitation of Renewable Studies*. Tech. rep. EIRGRID, 2010.

[63] Hesamoddin Marzooghi, David J Hill, and Gregor Verbic. "Performance and stability assessment of future grid scenarios for the Australian NEM". In: *Australasian Universities Power Engineering Conference (AUPEC)*. Sept. 2014, pp. 1–6.

[64] M Gibbard and D Vowles. "Simplified 14-generator model of the SE Australian power system". In: *The University of Adelaide, South* (2010).

[65] AEMO. *2012 NTNDP Assumptions and Inputs*. Tech. rep. 2012.

[66] AEMO. *2013 NTNDP Assumptions and Inputs*. Tech. rep. AEMO Australia, 2013.

[67] Shariq Riaz et al. "Generic Demand Model Considering the Impact of Prosumers for Future Grid Scenario Analysis". In: *IEEE Transactions on Smart Grid* (2017), pp. 1–1. ISSN: 1949-3053. DOI: 10.1109/TSG.2017.2752712.

[68] Y. Xue, T. Van Custem, and M. Ribbens-Pavella. "Extended equal area criterion justifications, generalizations, applications". In: *IEEE Transactions on Power Systems* 4.1 (1989), pp. 44–52. ISSN: 08858950. DOI: 10.1109/59.32456.

[69] J. Riesz, B. Elliston, P. Vithayasrichareon, I. MacGill. *100 Renewables in Australia: A Research Summary - Google Search*. Tech. rep. Centre for Energy and Environmental Markets UNSW, 2016.

[70] CSIRO. *Change and choice: The Future Grid Forum's analysis of Australia's potential electricity pathways to 2050*. Tech. rep. CSIRO Australia, 2015.

[71] CSIRO. *Future Grid Forum: change and choice for Australia electricity system*. Tech. rep. CSIRO Australia, 2013.

[72] Greenpeace. *PowER 2030 - A European Grid for 3/4 Renewable Energy by 2030*. Tech. rep. Greenpeace Germany, 2013.

[73] AEMO. *Emerging Technologies Information Paper, National Electricity Forecasting Report*. Tech. rep. AEMO Australia, 2015.

[74] AEMO. *Detailed Summary of 2015 Electricity Forecasts*. Tech. rep. AEMO Australia, 2015.

[75] Sara Eftekharnejad et al. "Impact of increased penetration of photovoltaic generation on power systems". In: *IEEE Transactions on Power Systems* 28.2 (May 2013), pp. 893–901. ISSN: 0885-8950. DOI: 10.1109/TPWRS.2012.2216294.

[76] S.O. Faried, R. Billinton, and S. Aboreshaid. "Probabilistic evaluation of transient stability of a power system incorporating wind farms". In: *IET Renewable Power Generation* 4.4 (2010), p. 299. ISSN: 17521416. DOI: 10.1049/iet-rpg.2009.0031.

[77] Ahmed Khallaayoun et al. "PV and CSP integration study experience in a Mediterranean partner country". In: *IET Renewable Power Generation* 10.1 (Jan. 2016), pp. 42–49. ISSN: 1752-1416. DOI: 10.1049/iet-rpg.2015.0142.

[78] Md Ayaz Chowdhury et al. "Transient stability of power system integrated with doubly fed induction generator wind farms". In: *IET Renewable Power Generation* 9.2 (Mar. 2015), pp. 184–194. ISSN: 1752-1416. DOI: 10.1049/iet-rpg.2014.0035.

[79] Libao Shi et al. "Effects of wind generation intermittency and volatility on power system transient stability". In: *IET Renewable Power Generation* 8.5 (July 2014), pp. 509–521. ISSN: 1752-1416. DOI: 10.1049/iet-rpg.2013.0028.

[80] K.R. Padiyar and S. Krishna. "Online Detection of Loss of Synchronism Using Energy Function Criterion". In: *IEEE Transactions on Power Delivery* 21.1 (Jan. 2006), pp. 46–55. ISSN: 0885-8977. DOI: 10.1109/TPWRD.2005.848652.

[81] Kai Sun, Stephen T. Lee, and Pei Zhang. "An Adaptive Power System Equivalent for Real-Time Estimation of Stability Margin Using Phase-Plane Trajectories". In: *IEEE Transactions on Power Systems* 26.2 (May 2011), pp. 915–923. ISSN: 0885-8950. DOI: 10.1109/TPWRS.2010.2055900.

[82] Kai Sun and Stephen T. Lee. "Power system security pattern recognition based on phase space visualization". In: *2008 Third International Conference on Electric Utility Deregulation and Restructuring and Power Technologies*. IEEE, Apr. 2008, pp. 964–969. ISBN: 978-7-900714-13-8. DOI: 10.1109/DRPT.2008.4523546.

[83] Liancheng Wang and A.A. Girgis. "A new method for power system transient instability detection". In: *IEEE Transactions on Power Delivery* 12.3 (July 1997), pp. 1082–1089. ISSN: 08858977. DOI: 10.1109/61.636874.

[84] D.Z. Fang et al. "Transient stability assessment using projection formulations". In: *IET Generation, Transmission & Distribution* 3.6 (June 2009), pp. 596–603. ISSN: 1751-8687. DOI: 10.1049/iet-gtd.2008.0583.

[85] R. Liu, G. Verbič, and J. Ma. "A machine learning approach for fast future grid small-signal stability scanning". In: *2016 IEEE International Conference on Power System Technology (POWERCON)*. Sept. 2016, pp. 1–6. DOI: 10.1109/POWERCON.2016.7753894.

[86] R. Liu et al. "Fast Stability Scanning for Future Grid Scenario Analysis". In: *IEEE Transactions on Power Systems* 33.1 (Jan. 2018), pp. 514–524. ISSN: 0885-8950. DOI: 10.1109/TPWRS.2017.2694048.

[87] Hesamoddin Marzooghi et al. "Generic Demand Modelling Considering the Impact of Prosumers for Future Grid Scenario Studies". In: (2016).

[88] Liam Fahey and Robert M. Randall. *Learning From the Future*. Wiley, 1998.

[89] John Foster et al. *Delivering a competitive Australian power system Part 2: The challenges, the scenarios*. Tech. rep. School of Economics, University of Queensland, Australia, 2013.

[90] G. Sanchis. *e-Highway2050: Europe's future secure and sustainable electricity infrastructure. Project results.* Tech. rep. 2015.

[91] "Renewable Electricity Futures for the United States". In: *IEEE Transactions on Sustainable Energy* 5.2 (Apr. 2014), pp. 372–378.

[92] Jaquelin Cochran, Trieu Mai, and Morgan Bazilian. "Meta-analysis of high penetration renewable energy scenarios". In: *Renewable and Sustainable Energy Reviews* 29 (2014), pp. 246–253.

[93] Ben Elliston, Jenny Riesz, and Iain MacGill. "What cost for more renewables? The incremental cost of renewable generation – An Australian National Electricity Market case study". In: *Renewable Energy* 95 (2016), pp. 127 –139.

[94] Ben Elliston, Iain MacGill, and Mark Diesendorf. "Least cost 100% renewable electricity scenarios in the Australian National Electricity Market". In: *Energy Policy* 59 (2013), pp. 270–282.

[95] Cory Budischak et al. "Cost-minimized combinations of wind power, solar power and electrochemical storage, powering the grid up to 99.9% of the time". In: *Journal of Power Sources* 225 (2013), pp. 60–74.

[96] J Bebic. "Power System Planning: Emerging Practices Suitable for Evaluating the Impact of High-Penetration Photovoltaics". In: (2008).

[97] Jaime Quintero et al. "The impact of increased penetration of converter control-based generators on power system modes of oscillation". In: *IEEE Transactions on Power Systems* 29.5 (2014), pp. 2248–2256.

[98] T. Knuppel et al. "Small-signal stability of wind power system with full-load converter interfaced wind turbines". In: *IET Renewable Power Generation* 6.2 (2012), p. 79.

[99] M. Klein, G.J. Rogers, and P. Kundur. "A fundamental study of inter-area oscillations in power systems". In: *IEEE Transactions on Power Systems* 6.3 (1991), pp. 914–921.

[100] NW Miller et al. *Western Wind and Solar Integration Study Phase 3A: Low Levels of Synchronous Generation*. Tech. rep. NREL, 2015.

[101] E. Vittal, M. O'Malley, and A. Keane. "A Steady-State Voltage Stability Analysis of Power Systems With High Penetrations of Wind". In: *IEEE Transactions on Power Systems* 25.1 (Feb. 2010), pp. 433–442.

[102] Debbie Q Zhou, U D Annakkage, and Athula D Rajapakse. "Online Monitoring of Voltage Stability Margin Using an Artificial Neural Network". In: *IEEE Transactions on Power Systems* 25.3 (Aug. 2010), pp. 1566–1574.

[103] H.A. Shayanfar, H. Razmi, and M. Teshnehlab. "Neural network based on a genetic algorithm for power system loading margin estimation". In: *IET Generation, Transmission & Distribution* 6.11 (Nov. 2012), pp. 1153–1163.

[104] Yan Xu et al. "An Intelligent Dynamic Security Assessment Framework for Power Systems With Wind Power". In: *IEEE Transactions on Industrial Informatics* 8.4 (Nov. 2012), pp. 995–1003.

[105] Nima Amjady and Seyed Farough Majedi. "Transient Stability Prediction by a Hybrid Intelligent System". In: *IEEE Transactions on Power Systems* 22.3 (Aug. 2007), pp. 1275–1283.

[106] F. Aboytes and R. Ramirez. "Transient stability assessment in longitudinal power systems using artificial neural networks". In: *IEEE Transactions on Power Systems* 11.4 (1996), pp. 2003–2010.

[107] M. Mohammadi and G.B. Gharehpetian. "Application of core vector machines for on-line voltage security assessment using a decision-tree-based feature selection algorithm". In: *IET Generation, Transmission & Distribution* 3.8 (Aug. 2009), pp. 701–712.

[108] T. Jain, L. Srivastava, and S.N. Singh. "Fast voltage contingency screening using radial basis function neural network". In: *IEEE Transactions on Power Systems* 18.4 (Nov. 2003), pp. 1359–1366.

[109] M Ramezani, C Singh, and M.-R. Haghifam. "Role of Clustering in the Probabilistic Evaluation of TTC in Power Systems Including Wind Power Generation". In: *IEEE Transactions on Power Systems* 24.2 (May 2009), pp. 849–858.

[110] Maryam Ramezani, Hamid Falaghi, and Chanan Singh. "A Deterministic Approach for Probabilistic TTC Evaluation of Power Systems Including Wind Farm Based on Data Clustering". In: *IEEE Transactions on Sustainable Energy* 4.3 (July 2013), pp. 643–651. ISSN: 1949-3029. DOI: 10.1109/TSTE.2012.2231970.

[111] AEMO. *2012 National Transmission Network Development Plan*. Tech. rep. Australian Energy Market Operator, 2012.

[112] Shariq Riaz et al. "Impact study of prosumers on loadability and voltage stability of future grids". In: *2016 IEEE International Conference on Power Systems Technology (POWERCON)*. Sept. 2016.

[113] Ahmad Shabir Ahmadyar et al. "Assessment of Minimum Inertia Requirement for System Frequency Stability". In: *2016 IEEE International Conference on Power Systems Technology (POWERCON)*. Sept. 2016.

[114] Thierry van Cutsem and Costas Vournas. *Voltage Stability of Electric Power Systems*. Springer, 1998.

[115] R. Xu and D. Wunsch II. "Survey of Clustering Algorithms". In: *IEEE Transactions on Neural Networks* 16.3 (May 2005), pp. 645–678.

[116] J.L. Rueda and D.G. Colomé. "Probabilistic performance indexes for small signal stability enhancement in weak wind-hydro-thermal power systems". In: *IET Generation, Transmission & Distribution* 3.8 (Aug. 2009), pp. 733–747.

[117] M Clerc and J Kennedy. "The particle swarm - explosion, stability, and convergence in a multidimensional complex space". In: *IEEE Transactions on Evolutionary Computation* 6.1 (2002), pp. 58–73.

[118] D.W. van der Merwe and A.P. Engelbrecht. "Data clustering using particle swarm optimization". In: *The 2003 Congress on Evolutionary Computation, 2003. CEC '03.* IEEE, pp. 215–220. ISBN: 0-7803-7804-0. DOI: 10.1109/CEC.2003.1299577.

[119] A. Ahmadyfard and H. Modares. "Combining PSO and k-means to enhance data clustering". In: *Telecommunications, 2008. IST 2008. International Symposium on*. Aug. 2008, pp. 688–691.

[120] M Robnik-Sikonja and I Kononenko. "Theoretical and Empirical Analysis of ReliefF and RReliefF". In: *Machine Learning* 53.1 (Oct. 2003).

[121] C.A. Jensen, M.A. El-Sharkawi, and R.J. Marks. "Power system security assessment using neural networks: feature selection using Fisher discrimination". In: *IEEE Transactions on Power Systems* 16.4 (2001), pp. 757–763.

[122] K.R. Niazi, C.M. Arora, and S.L. Surana. "Power system security evaluation using ANN: feature selection using divergence". In: *Proceedings of the International Joint Conference on Neural Networks, 2003.* Vol. 3. IEEE, 2003, pp. 2094–2099.

[123] K. Kira. "A Practical Approach to Feature Selection". In: *Proceedings of International Conference on Machine Learning* (1992).

[124] Z-S Lu and Z-R Hou. "Particle Swarm Optimization with Adaptive Mutation". In: *Acta electronica sinica* 32.3 (2004), pp. 416–420.

[125] R. Liu, G. Verbič, and Y. Xu. "A new reliability-driven intelligent system for power system dynamic security assessment". In: *2017 Australasian Universities Power Engineering Conference (AUPEC)*. Nov. 2017, pp. 1–6. DOI: 10.1109/AUPEC.2017.8282442.

[126] Miao He, Vijay Vittal, and Junshan Zhang. "Online dynamic security assessment with missing pmu measurements: A data mining approach". In: *IEEE Transactions on Power Systems* 28.2 (May 2013), pp. 1969–1977.

[127] Guang-Bin Huang, Qin-Yu Zhu, and Chee-Kheong Siew. "Extreme learning machine: Theory and applications". In: *Neurocomputing* 70.1 (2006), pp. 489–501. ISSN: 09252312. DOI: 10.1016/j.neucom.2005.12.126.

[128] P. Pudil, J. Novovičová, and J. Kittler. "Floating search methods in feature selection". In: *Pattern Recognition Letters* 15.11 (1994), pp. 1119–1125. ISSN: 01678655. DOI: 10.1016/0167-8655(94)90127-9.

[129] Thomas G. Dietterich. "Machine-Learning Research". In: *AI Magazine* 18.4 (1997), p. 97. ISSN: 0738-4602. DOI: 10.1609/AIMAG.V18I4.1324.

[130] Robert E. Schapire. "The strength of weak learnability". In: *Machine Learning* 5.2 (June 1990), pp. 197–227. ISSN: 0885-6125. DOI: 10.1007/BF00116037.

[131] A Pai. *Energy function analysis for power system stability*. Springer Science & Business Media, 2012.

[132] Andrew Estabrooks, Taeho Jo, and Nathalie Japkowicz. "A Multiple Resampling Method for Learning from Imbalanced Data Sets". In: *Computational Intelligence* 20.1 (Feb. 2004), pp. 18–36. ISSN: 0824-7935. DOI: 10.1111/j.0824-7935.2004.t01-1-00228.x.

[133] M. Stone. "Cross-validatory choice and assessment of statistical predictions (with discussion) (Corr: 76V38 p102)". In: *Journal of the Royal Statistical Society, Series B: Methodological* 36 (1974), pp. 111–147.

[134] R. Liu, G. Verbič, and J. Ma. "A New Dynamic Security Assessment Framework Based on Semi-supervised Learning and Data Editing". In: *Electric Power Systems Research - Submitted* (2019).

[135] J. Shu, W. Xue, and W. Zheng. "A Parallel Transient Stability Simulation for Power Systems". In: *IEEE Transactions on Power Systems* 20.4 (Nov. 2005), pp. 1709–1717. ISSN: 0885-8950. DOI: 10.1109/TPWRS.2005.857266.

[136] AR Barron. "Approximation and estimation bounds for artificial neural networks". In: *Machine Learning* (1994).

[137] Partha Niyogi and Federico Girosi. "On the relationship between generalization error, hypothesis complexity, and sample complexity for radial basis functions". In: *Neural Computation* 8.4 (1996), pp. 819–842.

[138] A Blum and T Mitchell. "Combining labeled and unlabeled data with co-training". In: *Proceedings of the eleventh annual conference on Computational learning theory. ACM, 1998.* (1998).

[139] Zhi-Hua Zhou and Ming Li. "Tri-training: exploiting unlabeled data using three classifiers". In: *IEEE Transactions on Knowledge and Data Engineering* 17.11 (Nov. 2005), pp. 1529–1541. ISSN: 1041-4347. DOI: 10.1109/TKDE.2005.186.

[140] Dana Angluin and Philip Laird. "Learning from noisy examples". In: *Machine Learning* 2.4 (Apr. 1988), pp. 343–370. ISSN: 0885-6125. DOI: 10.1007/BF00116829.

[141] Tongliang Liu and Dacheng Tao. "Classification with Noisy Labels by Importance Reweighting". In: *IEEE Transactions on Pattern Analysis and Machine Intelligence* 38.3 (Mar. 2016), pp. 447–461. ISSN: 0162-8828. DOI: 10.1109/TPAMI.2015.2456899.

[142] JS Sánchez et al. "Analysis of new techniques to obtain quality training sets". In: *Pattern Recognition* (2003).

[143] A.M. Zoubir and B. Boashash. "The bootstrap and its application in signal processing". In: *IEEE Signal Processing Magazine* 15.1 (1998), pp. 56–76. ISSN: 10535888. DOI: 10.1109/79.647043.

[144] SB Yusof, GJ Rogers, and RTH Alden. "Slow coherency based network partitioning including load buses". In: *IEEE Transactions on Power* (1993).