Evaluation of the dynamics of microalgae population structure and process performance during piggery wastewater treatment in algal-bacterial photobioreactors

Dimas García[1,2], Esther Posadas[1], Saúl Blanco[3], Gabriel Acién[4], Pedro García-Encina[1], Silvia Bolado[1], Raúl Muñoz[1]*

[1]Department of Chemical Engineering and Environmental Technology, Valladolid University, Dr. Mergelina, s/n, 47011, Valladolid, Spain

[2]Centro para la Investigación de los Recursos Acuáticos de Nicaragua, CIRA/UNAN-Managua, Apdo. Postal 4598

[3]The Institute of the Environment, La Serna 58 - 24007 León, Spain

[4]Department of Chemical Engineering, University of Almeria, Cañada San Urbano, s/n, 04120 Almeria, Spain

*corresponding author: mutora@iq.uva.es

ABSTRACT

The dynamics of microalgae population during piggery wastewater (PWW) treatment in four open photobioreactors operated at 27 days of hydraulic retention time, and inoculated with *Chlorella* sp. (R1), *Acutodesmus obliquus* (R2), *Oscillatoria* sp. (R3) and in the absence of inoculum (R4), were evaluated for 6 months. In addition, the algal-bacterial biomass concentration, removal of organic matter, nutrients and heavy metals were also assessed. The results revealed a high diversity and rapid variations in the structure of microalgae populations, *Chlorella* sp. being dominant in R4 throughout most of the operational period. Steady state average biomass concentration ranged from 2445-2610 mg/L in R1-R3 to 3265 mg/L in R4. No significant differences were recorded in the removal efficiencies (REs) of total organic carbon (86-87%), inorganic

carbon (62-71%), total nitrogen (82-85%) and total phosphorous (90-92%). Finally, Zn-REs accounted for 26% in R3, 37% in R2, and 49% in R1 and R4.

Keywords: Algal-bacterial processes; biomass production; heavy metal removal; microalgae dynamics; piggery wastewater treatment.

1. Introduction

The current global energy and climate change crisis has triggered the quest for alternative green energy sources with a low carbon dioxide (CO_2) footprint (González-Fernández et al., 2012a). In this context, microalgae have emerged as a promising renewable energy platform due to their ability to transform sunlight directly into gas biofuels (i.e H_2) or an organic biomass feedstock that can be further bioconverted into multiple liquid and gas biofuels (Richmond, 2004). Thus, microalgal biomass can be anaerobically digested yielding biogas ($CH_4 + CO_2$) and a nutrient rich digestate (Ehimen et al., 2011; González-Fernández et al., 2012b). In addition, while the lipid fraction of microalgae can be transesterified into biodiesel (Vimalarasan et al., 2011), the carbohydrate fraction can be fermented into bioethanol (Naik et al., 2010) or biohydrogen (Chandrasekhar et al., 2015). Microalgae exhibit multiple advantages over conventional energy crops such as high areal productivities (50-100 tn/ha·y), cultivation in non-arable land (preventing competition with food) and high lipid or carbohydrate fractions depending on the cultivation conditions. Likewise, microalgae can be cultivated in fresh, marine or wastewaters (Cheah et al., 2016).

In this context, nutrient-rich wastewaters represent a valuable feedstock to reduce the costs of microalgae and cyanobacteria (from now on referred to as microalgae)

cultivation, which will ultimately increase the cost-competitiveness of microalgae-based biofuels (Acién et al., 2016). Algal-bacterial symbiosis can combine a low-cost mass production of biomass with the treatment of wastewater to levels required for discharge into natural water bodies. Indeed, both domestic, industrial and livestock wastewaters have successfully supported microalgae cultivation (Muñoz et al., 2003; Muñoz and Guieysse, 2006). During microalgae-based wastewater treatment, both the organic carbon, nitrogen and phosphorous present in the residual effluent are assimilated into algal-bacterial biomass. Heavy metals and pathogens are also efficiently removed during microalgae growth as a result of adsorption and pH-mediated mechanisms. Despite microalgae cultivation in wastewater entails significant economic and environmental advantages over axenic mass production of microalgae in mineral salt media, controversy still exists in literature about the possibility of maintaining monoalgal cultures with a constant biomass composition during microalgae-based wastewater treatment. This is central to the development of microalgae-based biorefineries for biofuel production, whose viability depends on the supply of a biomass with a consistent year-round composition and characteristics. Hence, while most studies conducted under laboratory or outdoors conditions focused on the removal of key pollutants present in wastewater, little attention has been paid to the monitoring of the dynamics of microalgae population.

Pig production is a key economic sector in many countries in Europe, accounting for 148.7 million pigs heads and 44.3% of the total European livestock (EU, 2015; MAGRAMA, 2015) in 2015. European pig farming generates 217- 434 million m^3/y (4-8 L/day/pig) of piggery wastewater containing high concentrations of organic matter and nutrients (De Godos et al., 2009). The estimated average organic matter and nutrient

load present in EU piggery wastewaters in 2015 amounted to 8.923.000 tn chemical oxygen demand (COD)/y, 890.000 tn nitrogen (N)/y and 223.000 tn phosphorous (P)/y (EU, 2016). In addition, piggery wastewater can contain high concentrations of heavy metals such as Zinc and Copper, typically used as growth promoters in swine nutrition (Abe et al., 2012; De la Torre et al., 2000).

The experimental work herein conducted evaluated the dynamics of microalgae population during piggery wastewater treatment in four open continuous photobioreactors inoculated with two green microalgae species, a cyanophyta, and without inoculum. In addition, the influence of the microalgae inoculum on the steady state organic matter, nutrient and heavy metal removal was assessed.

2. Materials and methods

2.1. Microalgae

Chlorella minutissima Fott and Nováková was obtained from an indoor high rate algal pond (HRAP) treating centrate at the Dept. of Chemical Engineering and Environmental Technology from Valladolid University (Spain). *Acutodesmus obliquus* and *Oscillatoria sp* were kindly provided by the Department of Chemical Engineering from Almeria University (Spain).

2.2. Piggery wastewater

Fresh centrifuged piggery wastewater (PWW) was collected at a nearby farm at Cantalejo (Spain) and stored at 4°C. The average composition of the piggery wastewater diluted at 15% was: 1340±34 mg/L of total suspended solids (TSS), 1375±121 mg/L of

total organic carbon (TOC), 314±55 mg/L of inorganic carbon (IC), 393±26 mg/L of total nitrogen (TN), 9.4±0.4 mg/L of total phosphorus (TP) and 0.7±0.2 mg/L of zinc (Zn). Nitrate (NO_3^-), nitrite (NO_2^-), copper (Cu) and arsenic (As) concentrations remained below detection limit (Table 1).

<Table 1>

2.3. Experimental set-up

The experimental set-up consisted of four 15.8 cm deep 3 L open photobioreactors illuminated at 2800 µmol/m^2·s for 12 hours a day (08h00 to 20h00) by LED lamps arranged in a horizontal configuration 20 cm above the photobioreactor surface (Figure1). The photobioreactors were immersed in a water bath to prevent the high temperatures imposed by the LEDs irradiation. Immersion water pumps were used to mix the algal-bacterial cultivation broth in the reactors. The photobioreactors were fed with piggery wastewater diluted at 15% using an auto control 205U7CA multi-channel cassette pump (Watson-Marlow, UK). The pH in the cultivation broth was automatically maintained at 8.0 via CO_2 addition (CARBUROS METALICOS-Barcelona, Spain) using a Crison multimeter M44 control unit (Crison Instruments, Spain).

< Figure 1>

2.4. Experimental design

Photobioreactors 1, 2 and 3 (namely R1, R2 and R3, respectively) were inoculated with *Chlorella minutissima* Fott and Nováková, *Acutodesmus obliquus* and *Oscillatoria* sp., respectively, at an initial TSS concentration of 220 mg/L (corresponding to initial cell concentrations of 1.750, 0.295 and $0.332 \cdot 10^9$ cells/L, respectively). Photobioreactor 4 (R4) was not inoculated and served as control. The photobioreactors, which were initially filled with tap water, were operated at a hydraulic retention time (HRT) of ≈ 27 days (estimated based on the influent PWW) for 176 days. Photobioreactors effluents overflowed separately as a function of the evaporation rates. Liquid samples of 30 mL were weekly drawn from the influent PWW and effluent of R1, R2, R3 and R4 to determine the concentrations of TOC, IC, TN, NO_2^-, NO_3^-, TP and TSS. Effluent samples were filtered through 1 µm glass fiber filters prior analysis. Likewise, the microalgae population structure in R1, R2, R3 and R4 was weekly assessed from biomass samples preserved with lugol acid at 5% and formaldehyde at 10%, and stored at 4 ºC prior to analysis (only 8 samples from each photobioreactor were analyzed). The dissolved oxygen and temperature of the cultivation broths were measured twice per day, while the influent and effluent flowrates were daily recorded in all photobioreactors to monitor water evaporation losses. Finally, the C, N and P content of the algal bacterial biomass was measured under steady state at the end of the experiment.

The C, N and P removal efficiencies (RE) were calculated according to Eq. (1):

$$RE(\%) = \frac{(C_{feed} \times Q_{feed}) - (C_{eff} \times Q_{eff})}{C_{feed} \times Q_{feed}} \times 100 \quad (1)$$

where C_{feed} and C_{eff} represent the dissolved concentrations of TOC, IC, TN, TP and Zn in the PWW and photobioreactors effluents, respectively, while Q_{feed} and Q_{eff} represent

the PWW and effluent flow rates. The process was considered under steady state when the TSS concentrations in the photobioreactors remained stable for at least four consecutive samplings (~ 1 month). The results were here provided as the average ± standard deviation from duplicate measurements along one month of steady state (days 150-176).

2.5 Analytical procedures

A Crison M44 multimeter and a Crison PH 28 meter were used for the on-line measurement of the pH. Dissolved oxygen (DO) and temperature (T) were recorded using an OXI 330*i* oximeter (WTW, Germany). A LI-250A light meter (LI-COR Biosciences, Germany) was used to measure the light intensity as photosynthetically active radiation (PAR). TOC, IC and TN concentrations were determined using a TOC-V CSH analyzer equipped with a TNM-1 module (Shimadzu, Japan). Nitrate and nitrite were analyzed by high performance liquid chromatography-ion conductivity (HPLC-IC) in a Waters 515 HPLC pump coupled with a Waters 432 ionic conductivity detector and equipped with an IC-Pak Anion HC (150 mm × 4.6 mm) column. TSS and TP concentrations were determined according to Standard Methods (APHA, 2005). The analysis of the C, N and P content in the algal-bacterial biomass was carried out using a LECO CHNS-932 elemental analyzer with pre-dried and grinded algal-bacterial biomass. The concentration of Zn, Cu and As was determined using a 725-ICP Optical Emission Spectrophotometer (Agilent, USA) at 213.62. The identification and quantification of microalgae were conducted by microscopic examination (OLYMPUS IX70, USA) according to Phytoplankton Manual (Sournia, 1978).

3. Results and Discussion

3.1. Dynamics of microalgae population

Chlorella sp., the inoculated microalgae species in R1, was detected throughout most of the experimental period in this photobioreactor and dominant at days 37 and 86 (at concentrations of $0.5 \cdot 10^9$ and $0.9 \cdot 10^9$ cells/L, respectively). *Acutodesmus obliquus* was also identified in R1 and became the dominant species by day 58. Finally, *Aphanothece* sp. was detected for the first time by day 58 and was dominant from day 122 to the end of the operation of R1 (Figure 2a). Similarly, the inoculated microalga species in R2 (*Acutodesmus obliquus)* was identified along the entire photobioreactor operation, with a significant dominance by days 37, 58 and 122 at cell concentrations of $1.3 \cdot 10^9$, $1.8 \cdot 10^9$ and $0.3 \cdot 10^9$ cells/L, respectively. *Chlorella* sp. was identified in R2 from the first operational days and remained at similar cell concentrations throughout the entire experiment (from $0.3 \cdot 10^9$ to $0.7 \cdot 10^9$ cells/L). Finally, *Aphanothece* sp. became dominant in R2 by the end of operation, with final cell concentrations of $2.9 \cdot 10^9$ cells/L (Figure 2b). *Oscillataria* sp. was replaced by *Chlorella* sp. and *Acutodesmus obliquus* in R3 from the first operational days (after the inoculation a change in color from green to red was noticed), *Chlorella* sp. being the dominant species throughout the entire operation with a maximum concentration of $8.2 \cdot 10^9$ cells/L by day 58 (Figure 2c). The higher pollution-tolerance of *Chlorella* sp. to PWW, combined with the high temperature and irradiations prevailing in this study, could have caused this rapid replacement of *Oscillatoria* sp (Talbot et al., 1991). Despite R4 was not inoculated, *Chlorella* sp. and *Aphanothece* sp. were present in the photobioreactor from the first days, *Chlorella* sp. being the dominant species along the 6 months of experiment. The

gradual increase in number of cells of *Aphanothece* sp. in R1, R2 and R4 suggest the influence of the characteristics of the PWW on microalgae population (Figure 2).

The higher dominance of *Chlorella* sp. in the four photobioreactors confirmed the high tolerance of this green microalgae to the pollutants and concentrations typically present in PWW (Kim et al., 2016; Kuo et al., 2015; Yuan et al., 2013). Indeed, the high abundance of *Acutodesmus obliquus* and *Chlorella* sp. (both belonging to the Chlorophyta phylum) along the experimental period in R1, R2 and R3 matched the microalgae pollution-tolerance classification reported by Palmer et al. (1969), who ranked *Scenedesmus* and *Chlorella* 4th and 5th, respectively. It can be hypothesized that organic pollution exhibited a higher influence on microalgae population structure than other environmental parameters such as water hardness, light intensity, pH, DO or temperature (Palmer, 1969). On the other hand, *Aphanothece* sp., which was not previously classified as a pollution tolerant microalga, was mainly identified at the end of experiment in R1 and R2 (Palmer, 1969). However, *Aphanothece microscopica nägeli* and *Aphanothece Clathrata* successfully supported the removal of organic matter and nitrogen from parboiled rice wastewater (REs of 83.4 and 72.7% for COD and N-TKN, respectively) in a 4.5 L tubular photobioreactor operated batchwise for 24 hours (Queiroz et al., 2007). Likewise, Bastos et al. (2014) reported COD and N-TKN REs of 97 and 78%, respectively, in a 4L batch tubular reactor treating parboiled rice wastewater for 24 hours.

The lack of monoalgal cultures in the four photobioreactors throughout the experimental period and the rapid variations in microalgae population structure here recorded (mainly in R1 and R2) revealed the difficulty to maintain monoalgal cultures

during the treatment of PWW in open systems (Posadas et al., 2015). In this context, a lower microalgae diversity was observed at higher biomass concentrations, which was in agreement with Park et al. (2011). In addition, the current morphological microalgae characterization revealed that the inoculation of a photobioreactor during PWW treatment with a specific microalga does not guarantee its long-term dominance (Serejo et al., 2015). Finally, it should be stressed that the different microalgae cells concentration in the inoculum of the photobioreactors (1.750, 0.295 and $0.332 \cdot 10^9$ cells/L for R1, R2 and R3, respectively) only affected the time required to reach steady state and the initial treatment performance, but it did not modify the conclusions here obtained since the performance of the systems was analyzed at constant under steady state.

< Figure 2>

3.2. Biomass concentration and productivity

Biomass concentration in R1, R2 and R3 increased from 220 mg TSS/L to 530, 680, and 660 mg TSS/L, respectively, during the first 38 days. A moderate increase from 0 to 200 mg TSS/L was also recorded in R4 (Figure 3). A significant biomass concentration increase occurred in R1, R2 and R3 from the day 38 to 93, when TSS concentrations of 2440, 2140 and 2500 mg TSS/L, respectively, were measured. However, a lower biomass growth rate was observed during this period in R4, where concentrations up to 1200 mg TSS/L were recorded (Figure 3). Biomass concentration in R2 and R3 remained constant from day 93 onwards at average concentrations of 2569±69 and 2445±222 mg TSS/L, respectively. Biomass concentration in R1 fluctuated from day 93 to 150, to finally stabilize at 2610±191 mg TSS/L, which was similar to the

concentrations reached in R2 and R3 (Figure 3). On the other hand, biomass concentration exponentially increased in R4 from day 93, to reach average value of 3265±133 mg TSS/L by the end of the experiment. Surprisingly, the highest algal-bacterial biomass concentration under steady state was achieved in the non-inoculated photobioreactor despite its longer lag phase. Likewise, the highest TOC, IC, TN, TP and Zn REs (below discussed) were obtained in R4, which highlighted the higher robustness of native microalgae species acclimated to the environmental and operational conditions prevailing during PWW treatment (Figures 2 and 3, Table 1) (Olguín et al., 2013). In addition, the results clearly showed a similar biomass growth pattern in the photobioreactors inoculated with a specific photosynthetic microorganisms in comparison with the control unit R4.

The high biomass concentrations here recorded were supported by the high carbon and nutrients concentrations in the diluted PWW and by the high water evaporation rates in the systems, which accounted for 60 % of the influent PWW in all photobioreactors as noticed by Guieysse et al. (2013) (Table 1). Hence, biomass productivities under steady state averaged 6.2±0.5, 6.1±0.2, 5.8±0.6 and 7.8±0.3 $g/m^2 \cdot d$ in R1, R2, R3 and R4, respectively. These productivities were comparable to those obtained during the treatment of secondary domestic wastewater treatment in pilot raceways at high HRT in Almeria (Spain), and were likely limited by the long HRT needed to ensure satisfactory organic matter and nutrients removals (Posadas et al., 2015).

Finally, the comparison between the evolution of the total number of microalgae cells in the cultures and the TSS concentrations (Figures 2 and 3) showed no direct correlation as a result of the dominant role of bacteria in the process, which itself was influenced by

the high biodegradable organic matter load. In this regard, an accurate empirical determination of the individual bacteria and microalgae populations would bring valuable insights about the mechanisms underlying organic matter and nutrient removal during PWW treatment.

< Figure 3>

3.3 Carbon and nutrient removal

A comparable bioremediation performance in terms of TOC, IC, TN and TP removal was recorded regardless of the microalgae inoculated in the photobioreactor (Figure 4 and Table 1). In this context, the dominant microalgae species prevailing in the photobioreactor did not influence process performance. In this particular study, the high light irradiances and the optimum temperature for microbial activity supported an effective PWW treatment. Thus, despite the low DO concentrations in the cultivation broth (≤1.3 mg/L), TOC-REs accounted for 86±1, 87±5, 86±1 and 86±1 % in R1, R2, R3 and R4, respectively, which resulted in average TOC concentrations in the effluent at the end of the operational period of 459±31, 452±31, 482±27 and 490±37 mg/L, respectively (Figure 4 andTable 1). Please note that the high water evaporation rates typically encountered in open photobioreactors resulted in moderately high effluent TOC concentration despite the high removal efficiencies achieved. The results herein obtained confirmed the consistent removal of organic matter from PWW by algal-bacterial processes and were in agreement with the study conducted by De Godos et al. (2009), who reported COD removal efficiencies of 76±11% in a 464 L high rate algal ponds (HRAP) during the treatment of 20 and 10 folds diluted PWW. Similarly, IC-REs of 63±3, 69±4, 71±4 and 62±3 % were recorded at the end of the process in R1, R2, R3

and R4, respectively, which resulted in IC concentrations in the cultivation broth of the photobioreactors of 285±14, 242±34, 227±33 and 294±27 mg/L, respectively (Figure 4 and Table 1). These high IC-REs were promoted by the intensive photosynthetic activity during the illuminated period over the 176 days of operation. However, carbon removal by stripping (prior mineralization of the organic carbon to CO_2) was the main mechanism accounting for carbon fate, since only 37, 38, 36 and 48 % of the total carbon removed was recovered in the harvested biomass in R1, R2, R3 and R4, respectively, under steady state conditions. This estimation was based on the carbon content of the biomass under steady state (as described below) and did not account for the CO_2 input for pH control.

TN-REs of 82±1, 83±3, 83±1 and 85±1 % were recorded under steady state in R1, R2, R3 and R4, respectively, which resulted in TN concentrations in the photobioreactor effluent of 174±11, 166±15, 165±12 and 149±10 mg/L, respectively (Figure 4 and Table 1). These high TN effluent concentrations in spite of the effective nitrogen removal efficiencies were due to the high evaporation rates in the photobioreactors. The TN-REs here recorded were similar to those reported by De Godos et al. (2009), who measured average total kjeldahl nitrogen (TKN) removals of 86±6% during PWW treatment in an open HRAP, and higher than the TN-REs of 63% obtained during the treatment of PWW under laboratory conditions in a 500 ml conical flasks incubated on a rotatory shaker at 27 ºC and 150 rpm under continuous illumination (Abou-Shanab et al., 2013). Likewise, Posadas et al., (2017) operated an outdoors HRAP supporting TN-REs of 80-86% during the treatment of centrate. Nitrogen removal by stripping was the main mechanism in our study, since only 26, 26, 23 and 31 % of the total nitrogen removed was recovered in the harvested biomass in R1, R2, R3 and R4, respectively.

On the other hand, steady state TP-REs of 90±2 , 91±1, 92±2 and 92±2 % were recorded in R1, R2, R3 and R4, respectively, which supported effluent TP concentrations of 2.4±0.3, 2.1±0.2, 1.9±0.5 and 1.8±0.3 mg/L, respectively (Figure 4, Table1). The TP-REs as ($P\text{-}PO_4^{3-}$) herein obtained were similar to those reported by Posadas et al., (2017) during the treatment of centrate in an outdoors HRAP (84 - 92%). Likewise, the TP-REs reported were in agreement with Franchino et al. (2016), who recorded phosphate REs > 90% during the treatment of 5 and 10 times diluted digestate in 250 ml flasks. Phosphorous assimilation into algal-bacterial biomass was the main removal mechanism in the photobioreactors based on the moderate pH values prevailing in the photobioreactors during the entire experiment (pH=8), which did not support a significant phosphate precipitation (García et al., 2017). Thus, a phosphorus mass balance revealed that 93, 93, 96 and 100 % of the total phosphorus removed was recovered in the harvested biomass for R1, R2, R3 and R4, respectively.

Overall, it is worth noting that a similar macroscopic bioremediation performance was recorded in the photobioreactors in spite of the different microalgae population structures under steady state (and during most of the experiment period), which suggest that bacteria played a dominant role during the treatment of high strength wastewaters such as piggery effluents.

< Figure 4>

Finally, comparable carbon, nitrogen and phosphorus contents were measured in the harvested biomass under steady state regardless of the initial inoculum, with average values of 50±1, 7.8±0.3 and 0.75±0.06 % for C, N and P, respectively (Figure 5). These

elemental biomass compositions were similar to those reported by Posadas et al. (2013) during domestic wastewater treatment in a 15 L algal-bacterial biofilm photobioreactor (42±2, 7±1 and 1.3±0.3 % for C, N and P, respectively), despite the different C/N/P ratio in both wastewaters (C/N/P of 100/15.6/0.6 in PWW and 100/18/5 in domestic wastewater). Likewise, these results were in agreement with those obtained by Cabanelas et al. (2013), who reported a C, N and P content in the harvested biomass of ≈ 44, 7.5 and 0.5 %, respectively, in a photobioreactor inoculated with *Chlorella vulgaris* and supplemented with CO_2 during the treatment of effluent from primary settler. In this context, the results herein obtained confirmed the similar algal-bacterial biomass composition regardless of the microalgae species present in the cultivation broth or operational conditions.

< Figure 5>

3.4. Heavy metals removal efficiency

The overall steady state Zn-REs in R1, R2, R3 and R4 accounted for 49±6, 37±6, 26±5 and 49±5 %, respectively, which resulted in average effluent Zn concentrations of 0.9±0.2, 1.1±0.1, 1.3±0.3 and 0.9±0.3 mg/L, respectively, at the end of the operational period (Table 1). These values were similar (Zn-REs of 37%) to those reported by Abe et al. (2008) during PWW treatment in wetlands. The fact that the highest Zn-REs occurred in the photobioreactors with the highest biomass concentrations (R1 and R4) and the lowest Zn-RE in R3 (at the lowest biomass concentration) suggested that Zn removal was mediated by biosorption onto the algal-bacterial biomass present in the photobioreactor (Table 1) (Kaplan et al., 1987; Muñoz et al., 2006). This showed the high tolerance of species such as *Chlorella* sp. to heavy metal contamination (Muñoz et

al., 2006). Higher Zn-REs by biosoportion would be expected at higher pHs according to Muñoz et al. (2006), who observed an increase in Zn accumulation into the algal-bacterial biomass from 5.0 to 11.7 mg Zn/g biomass when pHs was raised from 7 to 9, respectively. The determination of copper and arsenic removal efficiencies was not possible based on the low concentrations of these metals in the PWW (below the detection limit of the instrument = 0.6 mg/L).

4. Conclusions

This research revealed the difficulty to maintain monoalgal cultures during PWW treatment in open-photobioreactors operated under similar environmental and operational conditions. The high abundance of *Chlorella* sp. in most photobioreactors confirmed the high tolerance of this microalga to the pollutants. The acclimation of native species to the characteristics of the PWW resulted in highest biomass concentrations. An efficient PWW treatment occurred regardless of the microalgae species inoculated, which confirmed the robustness of algal-bacterial processes devoted to carbon and nutrient removals from livestock wastewaters. Finally, the heavy metals can be removed by biosorption into the algal-bacterial biomass produced during PWW bioremediation.

5. Acknowledgments

This research was supported by INIA, the European FEDER program (RTA2013-00056-C03-02), the Regional Government of Castilla y León (Project VA024U14 and UIC 71) and MINECO (Red Novedar). The financial support of the EU program

ERASMUS MUNDUS EURICA and Universidad Nacional Autónoma de Nicaragua (UNAN-Managua) are also gratefully acknowledged.

References

1. Abe, K., Waki, M., Suzuki, K., Kasuya, M., Suzuki, R., Itahashi, S., Banzai, K., 2012. Estimation of Zn and Cu unit output loads from animal husbandry facilities. Water Sci. Technol. 66, 653–658. doi:10.2166/wst.2012.224

2. Abou-Shanab, R.A.I., Ji, M.-K., Kim, H.-C., Paeng, K.-J., Jeon, B.-H., 2013. Microalgal species growing on piggery wastewater as a valuable candidate for nutrient removal and biodiesel production. J. Environ. Manage. 115, 257–264. doi:10.1016/j.jenvman.2012.11.022

3. Acién, F.G., Gómez-Serrano, C., Morales-Amaral, M.M., Fernández-Sevilla, J.M., Molina-Grima, E., 2016. Wastewater treatment using microalgae: how realistic a contribution might it be to significant urban wastewater treatment? Appl. Microbiol. Biotechnol. 100, 9013–9022. doi:10.1007/s00253-016-7835-7

4. APHA, 2005. Standards Methods for the Examination of Water and Wastewater, 21 st. ed. American Public Health Association, American Water Works Association, Water Enviroment Federation, Washington,D.C.

5. Bastos, R.G., Bonini, M. a., Zepka, L.Q., Jacob-Lopes, E., Queiroz, M.I., 2014. Treatment of rice parboiling wastewater by cyanobacterium Aphanothece microscopica Nägeli with potential for biomass products. Desalin. Water Treat. 3994, 1–7. doi:10.1080/19443994.2014.937758

6. Cabanelas, I.T.D., Ruiz, J., Arbib, Z., Chinalia, F.A., Garrido-Pérez, C., Rogalla, F., Nascimento, I.A., Perales, J.A., 2013. Comparing the use of different domestic wastewaters for coupling microalgal production and nutrient removal. Bioresour.

Technol. 131, 429–436. doi:10.1016/j.biortech.2012.12.152

7. Chandrasekhar, K., Lee, Y.-J., Lee, D.-W., 2015. Biohydrogen Production: Strategies to Improve Process Efficiency through Microbial Routes. Int. J. Mol. Sci. Int. J. Mol. Sci 16, 8266–8293. doi:10.3390/ijms16048266

8. Cheah, W.Y., Ling, T.C., Show, P.L., Juan, J.C., Chang, J.S., Lee, D.J., 2016. Cultivation in wastewaters for energy: A microalgae platform. Appl. Energy 179, 609–625. doi:10.1016/j.apenergy.2016.07.015

9. De Godos, I., Blanco, S., García-Encina, P.A., Becares, E., Muñoz, R., 2009. Long-term operation of high rate algal ponds for the bioremediation of piggery wastewaters at high loading rates. Bioresour. Technol. 100, 4332–4339. doi:10.1016/j.biortech.2009.04.016

10. De la Torre, A.I., Jiménez, J.A., Carballo, M., Fernandez, C., Roset, J., Muoz, M.J., 2000. Ecotoxicological evaluation of pig slurry. Chemosphere 41, 1629–1635. doi:10.1016/S0045-6535(00)00038-2

11. Ehimen, E.A., Sun, Z.F., Carrington, C.G., Birch, E.J., Eaton-Rye, J.J., 2011. Anaerobic digestion of microalgae residues resulting from the biodiesel production process. Appl. Energy 88, 3454–3463. doi:10.1016/j.apenergy.2010.10.020

12. EU, 2016. https://ec.europa.eu/info/legal-notice_en [WWW Document]. URL http://appsso.eurostat.ec.europa.eu/nui/show.do?dataset=apro_mt_lspig&lang=en (accessed 11.7.16).

13. EU, 2015. http://ec.europa.eu [WWW Document]. URL http://ec.europa.eu/eurostat/statistics-explained/index.php/Agricultural_production_-_animals (accessed 1.10.17).

14. Franchino, M., Tigini, V., Varese, G.C., Mussat Sartor, R., Bona, F., 2016. Microalgae treatment removes nutrients and reduces ecotoxicity of diluted piggery

digestate. Sci. Total Environ. 569, 40–45. doi:10.1016/j.scitotenv.2016.06.100

15. García, D., Alcántara, C., Blanco, S., Pérez, R., Bolado, S., Muñoz, R., 2017. Enhanced carbon, nitrogen and phosphorus removal from domestic wastewater in a novel anoxic-aerobic photobioreactor coupled with biogas upgrading. Chem. Eng. J. 313, 424–434. doi:10.1016/j.cej.2016.12.054

16. González-Fernández, C., Sialve, B., Bernet, N., Steyer, J.., 2012a. Impact of microalgae characteristic on their conversion to biofuel. Part I: Focus on cultivation and biofuel production. Biofuels, Bioprod. Biorefining 105–113. doi:10.1002/bbb

17. González-Fernández, C., Sialve, B., Bernet, N., Steyer, J.., 2012b. Impact of microalgae characteristics on their conversion to biofuel. Part II: Focus on biomethane production. Biofuels, Bioprod. Biorefining 205–2018. doi:10.1002/bbb

18. Guieysse, B., Béchet, Q., Shilton, A., 2013. Variability and uncertainty in water demand and water footprint assessments of fresh algae cultivation based on case studies from five climatic regions. Bioresour. Technol. 128, 317–323. doi:10.1016/j.biortech.2012.10.096

19. Kaplan, D., Cristiaen, D., Shoshana, A., 1987. Chelating Properties of Extracellular Polysaccharides from Chlorella spp. Appl. Environ. Microbiol. 53, 2953–2956.

20. Kim, H.-C., Choi, W.J., Chae, A.N., Park, J., Kim, H.J., Song, K.G., 2016. Treating high-strength saline piggery wastewater using the heterotrophic cultivation of Acutodesmus obliquus. Biochem. Eng. J. 110, 51–58. doi:10.1016/j.bej.2016.02.011

21. Kuo, C.M., Chen, T.Y., Lin, T.H., Kao, C.Y., Lai, J.T., Chang, J.S., Lin, C.S., 2015. Cultivation of Chlorella sp. GD using piggery wastewater for biomass and lipid production. Bioresour. Technol. 194, 326–333. doi:10.1016/j.biortech.2015.07.026

22. MAGRAMA, 2015. Censo y producción: Producción de porcino ibérico [WWW

Document]. URL http://www.magrama.gob.es/es/ganaderia/temas/produccion-y-mercados-ganaderos/sectores-ganaderos/porcino/ (accessed 10.18.16).

23. Muñoz, R., Alvarez, M.T., Muñoz, A., Terrazas, E., Guieysse, B., Mattiasson, B., 2006. Sequential removal of heavy metals ions and organic pollutants using an algal-bacterial consortium. Chemosphere 63, 903–11. doi:10.1016/j.chemosphere.2005.09.062

24. Muñoz, R., Guieysse, B., 2006. Algal-bacterial processes for the treatment of hazardous contaminants: A review. Water Res. 40, 2799–2815. doi:10.1016/j.watres.2006.06.011

25. Muñoz, R., Köllner, C., Guieysse, B., Mattiasson, B., 2003. Salicylate biodegradation by various algal-bacterial consortia under photosynthetic oxygenation. Biotechnol. Lett. 25, 1905–1911. doi:10.1023/B:BILE.0000003980.96235.fd

26. Naik, S.N., Goud, V. V., Rout, P.K., Dalai, A.K., 2010. Production of first and second generation biofuels: A comprehensive review. Renew. Sustain. Energy Rev. 14, 578–597. doi:10.1016/j.rser.2009.10.003

27. Olguín, E.J., Mendoza, A., González-Portela, R.E., Novelo, E., 2013. Population dynamics in mixed cultures of Neochloris oleoabundans and native microalgae from water of a polluted river and isolation of a diatom consortium for the production of lipid rich biomass. N. Biotechnol. 30, 705–715. doi:10.1016/j.nbt.2013.03.003

28. Palmer, C.M., 1969. A composite rating of algae tolerating organic pollution. J. Phycol. 5, 78–82. doi:10.1111/j.1529-8817.1969.tb02581.x

29. Park, J.B.K., Craggs, R.J., Shilton, A.N., 2011. Recycling algae to improve species control and harvest efficiency from a high rate algal pond. Water Res. 45, 6637–6649. doi:10.1016/j.watres.2011.09.042

30. Posadas, E., García-Encina, P.A., Soltau, A., Domínguez, A., Díaz, I., Muñoz,

R., 2013. Carbon and nutrient removal from centrates and domestic wastewater using algal-bacterial biofilm bioreactors. Bioresour. Technol. 139, 50–58. doi:10.1016/j.biortech.2013.04.008

31. Posadas, E., Marín, D., Blanco, S., Lebrero, R., Muñoz, R., 2017. Simultaneous biogas upgrading and centrate treatment in an outdoors pilot scale high rate algal pond. Bioresour. Technol. doi:10.1016/j.biortech.2017.01.071

32. Posadas, E., Morales, M.D.M., Gomez, C., Acién, F.G., Muñoz, R., 2015. Influence of pH and CO2 source on the performance of microalgae-based secondary domestic wastewater treatment in outdoors pilot raceways. Chem. Eng. J. 265, 239–248. doi:10.1016/j.cej.2014.12.059

33. Posadas, E., Serejo, M.L., Blanco, S., Pérez, R., García-Encina, P.A., Muñoz, R., 2015. Minimization of biomethane oxygen concentration during biogas upgrading in algal-bacterial photobioreactors. Algal Res. 12, 221–229. doi:10.1016/j.algal.2015.09.002

34. Queiroz, M.I., Lopes, E.J., Zepka, L.Q., Bastos, R.G., Goldbeck, R., 2007. The kinetics of the removal of nitrogen and organic matter from parboiled rice effluent by cyanobacteria in a stirred batch reactor. Bioresour. Technol. 98, 2163–2169. doi:10.1016/j.biortech.2006.08.034

35. Richmond, A., 2004. Handbook of microalgal culture: biotechnology and applied phycology/edited by Amos Richmond. doi:10.1002/9780470995280

36. Serejo, M.L., Posadas, E., Boncz, M.A., Blanco, S., García-Encina, P., Muñoz, R., 2015. Influence of Biogas Flow Rate on Biomass Composition During the Optimization of Biogas Upgrading in Microalgal-Bacterial Processes. Environ. Sci. Technol. 3228–3236. doi:10.1021/es5056116

37. Sournia, A., 1978. Phytoplankton manual. UNESCO, Paris.

38. Talbot, P., Thébault, J.., Dauta, A., De la Noüe, J., 1991. A comparative study and mathematical modeling of temperature, light and growth of three microalgae potentially useful for wastewater treatment. Water Res. 25, 465–472. doi:10.1016/0043-1354(91)90083-3

39. Vimalarasan, A., Pratheeba, N., Ashokkumar, B., Sivakumar, N., Varalakshmi, P., 2011. Production of biodiesel from cyanobacteria (Oscillatoria annae) by alkali and enzyme mediated transesterification. J. Sci. Ind. Res. (India). 70, 959–967.

40. Yuan, Z., Wang, Z., Takala, J., Hiltunen, E., Qin, L., Xu, Z., Qin, X., Zhu, L., 2013. Scale-up potential of cultivating chlorella zofingiensis in piggery wastewater for biodiesel production. Bioresour. Technol. 137, 318–325. doi:10.1016/j.biortech.2013.03.144

Figure captions

Figure 1. Schematic diagram of the algal-bacterial photobioreactor set-up using carbon dioxide supplementation for pH control.

Figure 2. Time course of microalgae population structure in (a) R1, (b) R2, (c) R3 and (d) R4. *Acutodesmus obliquus* (▨), *Aphanothece* sp. (▩), *Chlorella* sp. (▧), *Oscillatoria* sp. (▩) and total number of microalgae cells (■).

Figure 3. Time course of TSS concentration in R1 (Δ), R2 (◊), R3 (□) and R4 (○).

Figure 4. Average removal efficiencies of TOC (▭), IC (▤), TN (▩) and TP (▨) under steady state. Vertical bars represent the standard deviation from replicate measurements during steady state operation.

Figure 5. C (▧), N (▭), and P (▬) content in the biomass present in the photobioreactors under steady state.

Figure
Click here to download Figure: Figure 1_Garcia_BITE.docx

Figure 1. Schematic diagram of the algal-bacterial photobioreactor set-up using carbon dioxide supplementation for pH control.

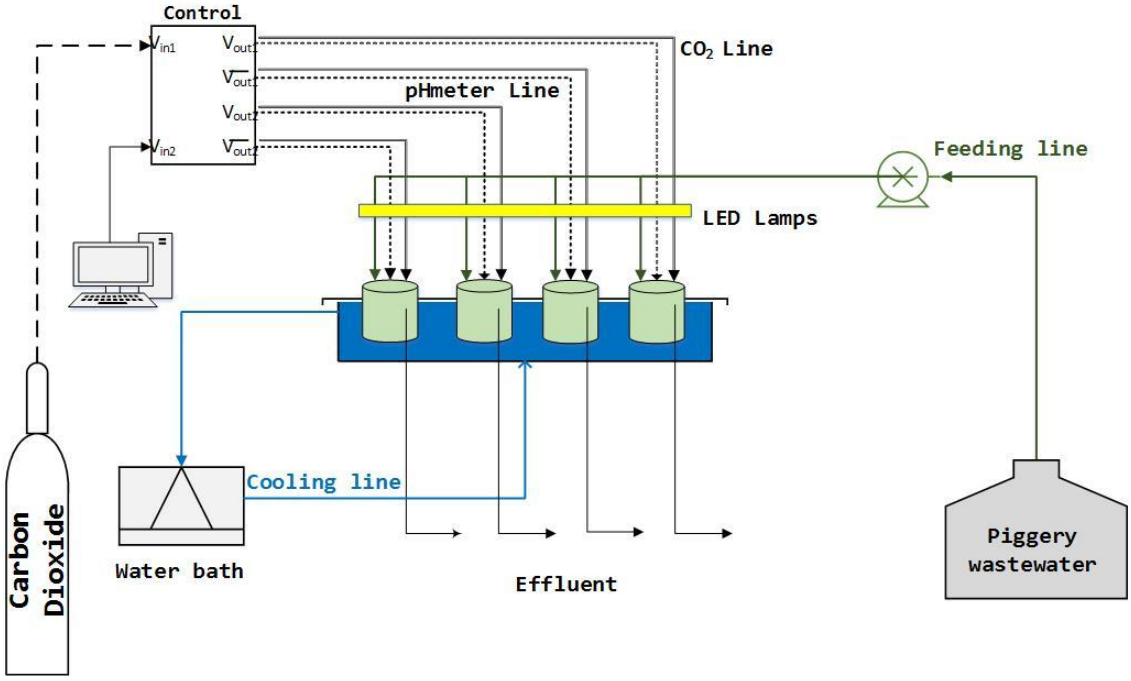

Figure
Click here to download Figure: Figure 2_Garcia_BITE.docx

Figure 2. Time course of microalgae population structure in (**a**) R1, (**b**) R2, (**c**) R3 and (**d**) R4. *Acutodesmus obliquus* (▨), *Aphanothece* sp. (■), *Chlorella* sp. (▧), *Oscillatoria* sp. (▩) and total number of microalgae cells (●).

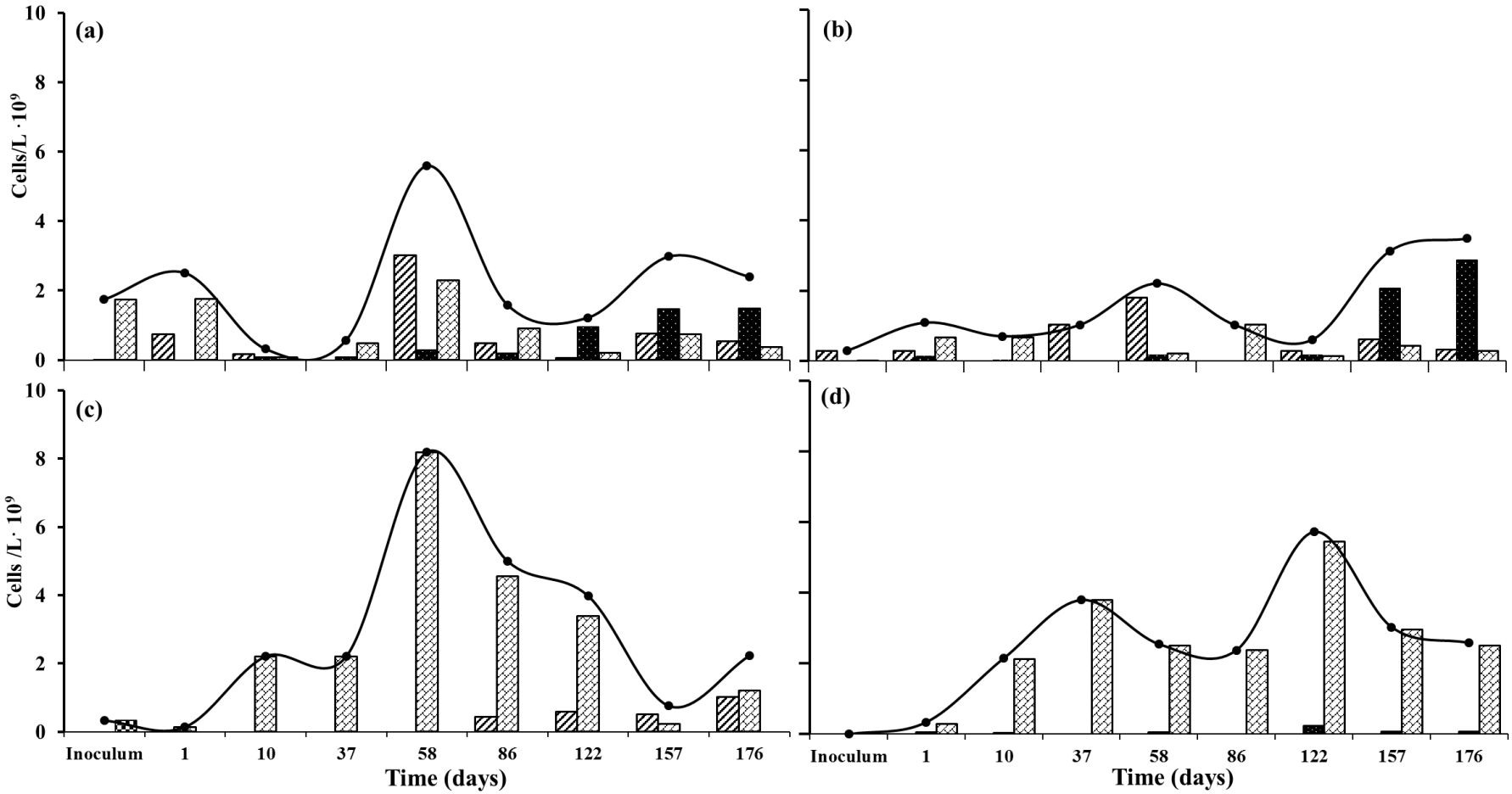

Figure
Click here to download Figure: Figure 3_Garcia_BITE.docx

Figure 3. Time course of TSS concentration in R1 (Δ), R2 (◊), R3 (□) and R4 (○).

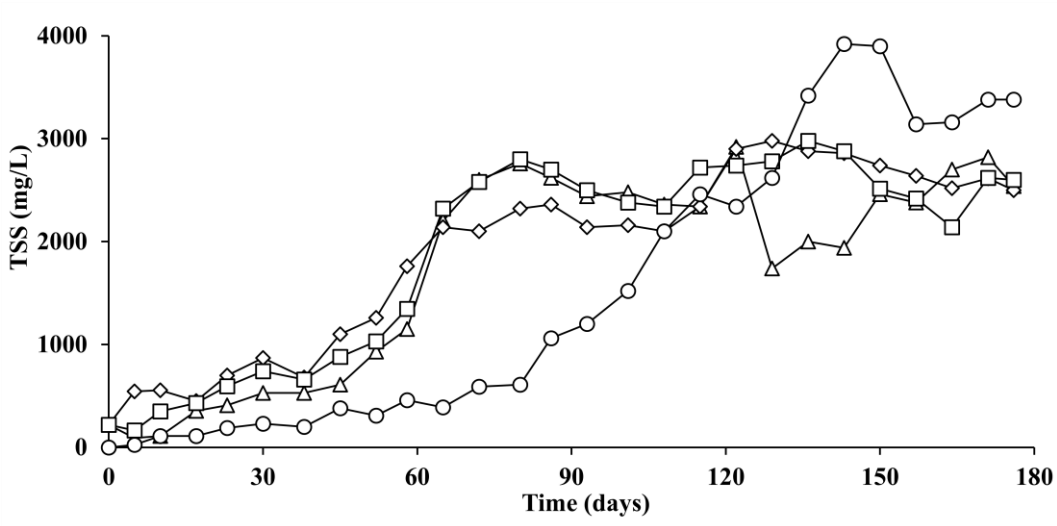

Figure
Click here to download Figure: Figure 4_Garcia_BITE.docx

Figure 4. Average removal efficiencies of TOC (▒), IC (▤), TN (■) and TP (▨) under steady state. Vertical bars represent the standard deviation from replicate measurements during steady state operation.

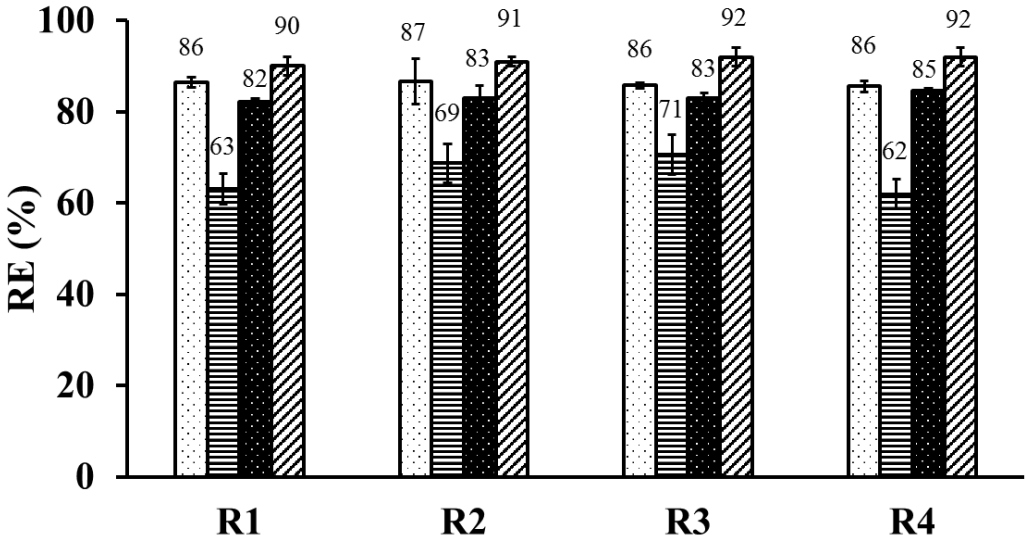

Figure
Click here to download Figure: Figure 5_Garcia_BITE.docx

Figure 5. C (▧), N (▭) and P (■) content in the biomass present in the photobioreactors under steady state.

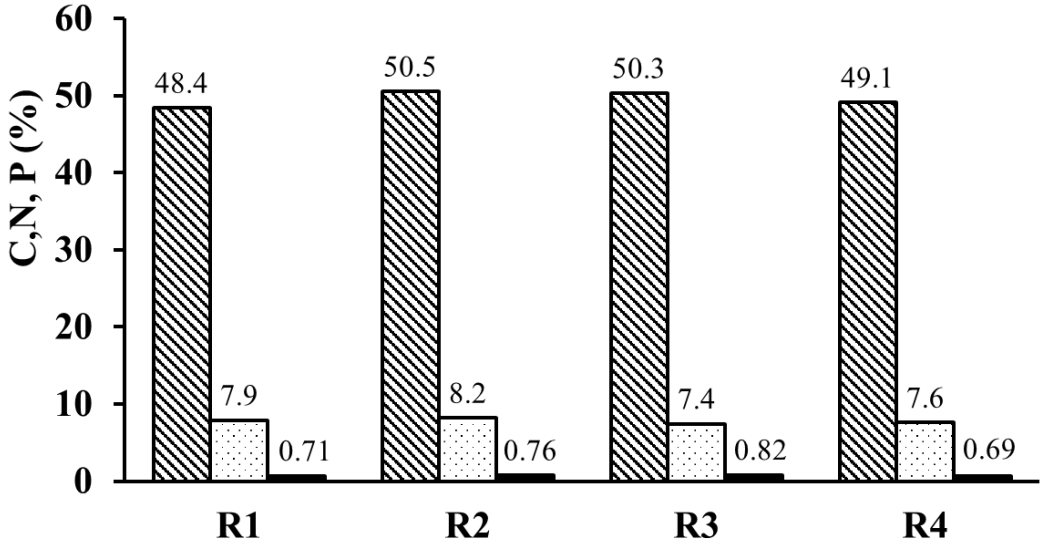

Table

Table 1.. Physical/chemical characterization of the diluted swine manure and cultivation broth in the photobioreactors at steady state.

Parameter	PWW	R1	R2	R3	R4
Evaporation (%)	n.a	60±6	60±7	60±6	60±8
Temperature (ºC)	n.a	30±2	30±2	30±2	30±2
Dissolved Oxygen (mg/L)	n.a	0.8	1.1	1.3	0.9
TOC (mg/L)	1375±121	459±31	452±31	482±27	490±37
IC (mg/L)	314±55	285±14	242±34	227±33	294±27
TN (mg/L)	393±26	174±11	166±15	165±12	149±10
Nitrite (mg/L)	< 0.5	< 0.5	< 0.5	< 0.5	< 0.5
Nitrate (mg/L)	< 0.5	< 0.5	< 0.5	< 0.5	< 0.5
TP (mg/L)	9.4±0.4	2.4±0.3	2.1±0.2	1.9±0.5	1.8±0.3
Zinc (mg/L)	0.7±0.2	0.9±0.2	1.1±0.1	1.3±0.3	0.9±0.3
Copper (mg/L)	< 0.6	< 0.6	< 0.6	< 0.6	< 0.6
Arsenic (mg/L)	< 0.6	< 0.6	< 0.6	< 0.6	< 0.6
TSS (mg/L)	1340±34	2610±191	2569±69	2445±222	3265±133

n.a : Not applicable

Electronic Annex

Click here to download Electronic Annex: Supplementary materials_Garcia_BITE.docx