energies
MDPI

Article

Methods for Advanced Wind Turbine Condition Monitoring and Early Diagnosis: A Literature Review

Md Liton Hossain *, Ahmed Abu-Siada and S. M. Muyeen

Department of Electrical and Computer Engineering, Curtin University, Kent Street, Bentley, Perth, WA 6102, Australia; A.AbuSiada@curtin.edu.au (A.A.-S.); s.m.muyeen@ieee.org (S.M.M.)
* Correspondence: mdliton.hossain@postgrad.curtin.edu.au; Tel.:+61-04-5144-1552

Received: 23 April 2018; Accepted: 12 May 2018; Published: 21 May 2018

Abstract: Condition monitoring and early fault diagnosis for wind turbines have become essential industry practice as they help improve wind farm reliability, overall performance and productivity. If not detected and rectified at early stages, some faults can be catastrophic with significant loss or revenue along with interruption to the business relying mainly on wind energy. The failure of Wind turbine results in system downtime and repairing or replacement expenses that significantly reduce the annual income. Such failures call for more systematized operation and maintenance schemes to ensure the reliability of wind energy conversion systems. Condition monitoring and fault diagnosis systems of wind turbine play an important role in reducing maintenance and operational costs and increase system reliability. This paper is aimed at providing the reader with the overall feature for wind turbine condition monitoring and fault diagnosis which includes various potential fault types and locations along with the signals to be analyzed with different signal processing methods.

Keywords: wind turbine; condition monitoring; fault diagnosis; signals; signal processing methods

1. Introduction

Wind energy has become a superior renewable energy resource that plays a vital role in the power sector. Above 54 GW of new wind turbine plants have been installed worldwide since the year 2016 according to the statistics of Global Wind Energy Council (GWEC) which includes more than 90 countries. These new installations represent a cumulative global market increase of more than 12.6% that reaches a total of 486.8 GW [1]. In Australia, the penetration of renewable energy level has also been increased during the past decade. Approximately 17.3% of Australia's electricity was generated from renewable energy sources in the year 2016 [2]. Wind power is one of the dominating renewable energy resources worldwide. According to the clean energy council, the current proportion of wind power generation to the total renewable energy generation in Australia is 30.9% as shown in Figure 1. This represents 5.3% of Australia's total electricity. Wind turbines are usually installed in remote areas or offshore in a very harsh environmental condition. This makes wind turbines more prone to failures. According to some statistical studies [3], the maximum wind turbines failure rate takes place within the gearbox followed by faults within the power electronic converters. Some of these faults can be catastrophic with significant loss or revenue and they can interrupt businesses that rely mainly on wind energy. To avoid such consequences, implementation of reliable condition monitoring and fault diagnosis techniques has become essential for all critical components in the electricity grid including the wind turbine [4–8].

This paper is organized as follows: Section 2 presents the basics of the wind turbine system and Section 3 presents the faults that occurred in the wind turbine system. Signals to be analyzed and signal processing methods are presented in Sections 4 and 5 respectively. Conclusions are drawn in Section 6.

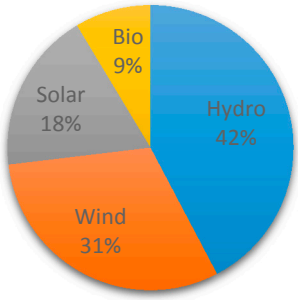

Figure 1. Renewable energy generation in Australia in 2016 [2].

2. The Basics of Wind Turbine System

A wind turbine is a complex electromechanical system that consists of several components and subsystems. The major components include rotor, bearings, mechanical shaft, gearbox, generator, power electronic interface and sensors as shown in Figure 2 [9]. Various types of generators such as wound rotor induction generator, squirrel-cage induction generator, and synchronous generator can be employed with wind turbines [10]. The squirrel-cage induction generator runs at a fixed speed and the variable wind speed may cause faults for this type. Adaptive control scheme is presented in [3] to ensure the reliable operation of the permanent magnet synchronous generator under different operating conditions. This type of generator is interfaced with the grid through full-scale power converters, which increases the implementation cost [11]. The wound rotor induction generator (also called doubly fed induction generators (DFIG)) based wind turbine system has become popular due to the superior features of this type which include low cost, low converter rating, active and reactive power control, reduced losses and high efficiency [12]. Moreover, this type can operate within a wide range of variable speed that overcomes the drawbacks of fixed speed synchronous generator [13]. In the DFIG-based wind energy conversion system (WECS), 70% of the generated power is directly fed to the grid through the stator terminals while the remaining 30% is fed to the grid via back to back converters that comprise rotor side converter, DC-link capacitor and grid side converter as shown in Figure 3 [14–17].

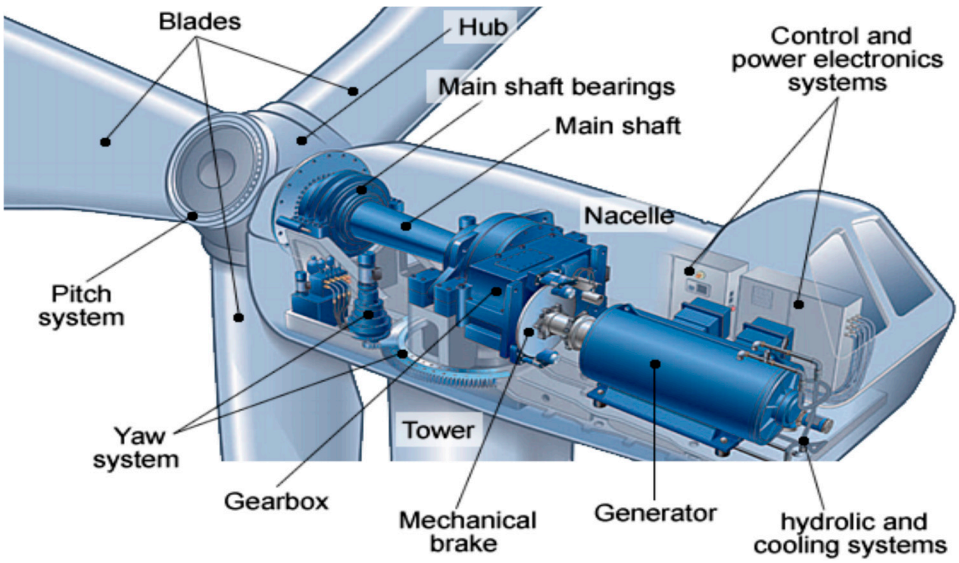

Figure 2. Typical utility-scale wind turbine main components [9].

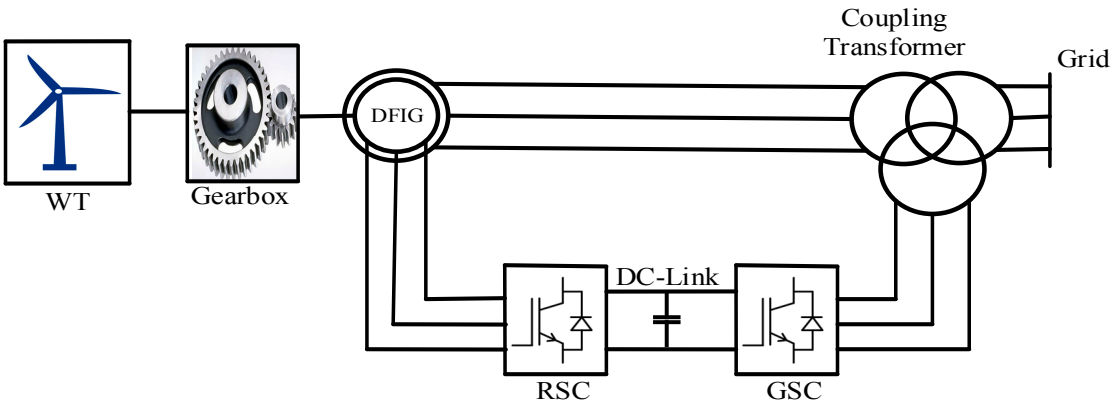

Figure 3. Schematic for DFIG-based WECS.

3. Faults of Wind Turbine System

The wind turbine system is subject to several types of faults within various components as shown in Figure 4. These faults are discussed below:

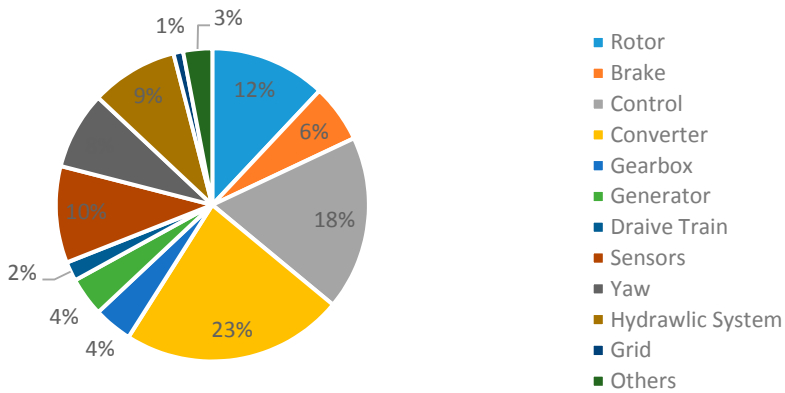

Figure 4. Failure rate within wind turbine components [18].

3.1. Rotor

The rotor of the wind turbine consists of blades and hub. The wind turbine rotor is subject to various mechanical faults such as rotor asymmetry, fatigue, crack, increased surface roughness, reduced stiffness, and deformation of blades [19]. Incorrect design of blades pitch angle and blades mass imbalance are the main causes of rotor asymmetry [20]. Fatigue is caused by material aging and variable speed of wind on the blades. Long-term fatigue causes a reduction of the stiffness of the blades and leads to crack on the surface. Blade surface roughness is usually caused by icing, pollution, exfoliation and blowholes. As rotor faults are accompanied with a change in the blade material structure, these faults can be diagnosed using acoustic emission and vibration sensors. Acoustic emission is able to detect emerging structural changes by inserting sensors on the blades [21]. If these faults develop to a certain level that contributes abnormal vibrations of the blades, then signals information acquired from vibration sensors can be utilized for fault diagnosis.

3.2. Gearbox

Gearbox faults represent approximately 35% of the overall faults in wind turbines [22]. Failure in the gearbox and bearing depends on various factors such as material defects, design, manufacturing and installing errors, surface wear, torque overloads, misalignment and fatigue. The most common gear box failures include tooth abrasion, tooth crack, breakage, fracturing and surface fatigue initiated

by the debris due to bearing failures [23]. These faults may cause an abnormal temperature increase of the bearing and the lubrication oil which can be used as an indication for such types of faults.

3.3. Main Shaft

The failures of the mechanical shaft include corrosion, misalignment, crack and coupling failure [24]. These faults affect the normal rotation of the shaft as well as other subsystems connected to the shaft. Hence the torque transmitted via the drivetrain will be affected and may lead to vibrations at certain characteristic frequencies in the gearbox, rotor, and generator [25]. Shaft misalignment fault affects the amplitude of the fundamental frequency of the vibration of the gearbox, rotor, and generator. Hence, shaft faults can be detected and analyzed by capturing vibration, torque, and electrical signals [24]. The analysis is done with the methods of frequency analysis such as fast Fourier transform (FFT).

3.4. Hydraulic System

A hydraulic system delivers hydraulic power to drive the motors that is used to adjust the blade pitch angle [26], maximizes wind power generation by adjusting yaw position and controls the mechanical brake to ensure the safety of wind turbine [27]. This system is subject to oil leak and sliding valve blocking faults. Pressure and level sensors' signals are used to diagnose these faults.

3.5. Mechanical Brake

A mechanical brake typically has three main components such as disk and calipers, hydraulic mechanism and three-phase ac motor. Hydraulic mechanism is used to drive the calipers and motor is used to power the hydraulic mechanism [28]. The brake is usually mounted on the main shaft. It is used to prevent the over speed of the rotor and even force the shaft to stop in case of failures of critical components. The brake is also applied for yaw subsystem to stabilize the bearing. The disk may be cracked due to overshoot of mechanical stress on the brake and overheating. Faults of the mechanical brake can be diagnosed through temperature and vibration monitoring.

3.6. Tower

The wind turbine tower faults are mainly occurred due to structure damages such as cracks and corrosions. These faults may be caused due to several factors including improper installation, loading, poor quality control during the manufacturing process, lightning, fire and earthquakes. Time and frequency domain analysis techniques can reveal the health condition of the tower [29].

3.7. Electric Machine

There are two types of faults that may take place in the electrical machine: mechanical and electrical faults. The electrical faults comprise open circuit, stator/rotor insulation damage and electrical imbalance. On the other side, broken rotor bar, air gap eccentricity, bent shaft, bearing failure and rotor mass imbalance are the main mechanical faults. The most common fault reported in the literature is the short circuit turns of coils in the wind turbine generator [30]. These faults can be detected through shaft displacement detection, torque measurement, and vibration analysis. Temperature sensor can be used to detect winding faults [31]. Stator open-circuit faults alter the spectra of the stator line currents and instantaneous power [32]. Since rotor electrical imbalance causes shaft vibration, vibration signals can be used to monitor electrical imbalance [25]. Stator electrical imbalance can be detected from the change in the harmonic content of electrical signals [30].

3.8. Power Electronic Converter

The reliability of the power electronic converter becomes more complex with the increase of wind turbine power rating. According to literature, about 20% of WECS is due to power electronic

converters failure as can be seen in Figure 4 [25]. Temperature, vibration and humidity are the three major factors that cause failures in power electronic converters [33]. There are three major converter components in which faults normally occur: capacitors, printed circuit board (PCB) and insulated gate bipolar transistor (IGBT) as shown in Figure 5. Capacitor faults include open/short circuit, electrode materials migrating across the dielectric and forms conductive paths, dielectric breakdown and increased dissipation factor. PCBs faults include broken buried metal lines, corrosion or crack of traces, component misalignment, board delamination and cold-solder joints. The failure modes of the IGBT modules include bond wire liftoff, short circuit, gate misfiring, solder fatigue and cracks [34]. Thermo-sensitive electrical parameters, such as the collector-emitter saturation voltage, gate-emitter threshold voltage, on-state resistance and internal thermal resistance are used to monitor the degradation of IGBT modules.

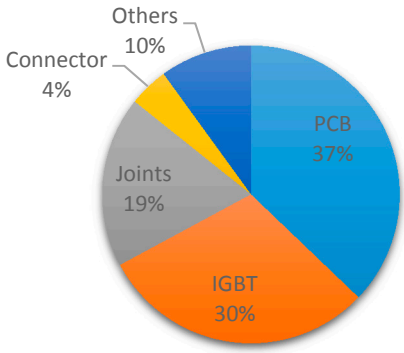

Figure 5. Failure rate distribution of power electronic converter for wind turbine system [10].

3.9. Sensors

Faults within the WECS may also take place in the sensors mounted at various locations to measure some condition monitoring parameters such as temperature, voltage, current and torque transducers. More than 14% of WECS faults occurs in these sensors [35]. Faults such as malfunction/physical failure, malfunction of the data processing/communication software [21] may cause performance degradation to the wind turbine, failure to the control system, mechanical and electrical subsystems and may lead to shut down the wind turbine. Encoder faults in an induction motor drive are detected by measuring the mean and standard deviation of the rotor speed signal [36]. The correlation between rotor position and stator current are used to detect encoder faults by using the wavelet transform [37].

3.10. Control System

The control system plays a vital role in regulating the operations of wind turbine. Faults in the control system can be categorized into hardware and software failures. Hardware failures include sensor faults, actuator faults, failure of control board and communication links. Model-based methods can be used to detect hardware failures. The software failures include buffer overflow, resource leaks and out of memory. These faults can be detected using diagnosing codes in the software.

4. Signals of Wind Turbine Condition Monitoring System

4.1. Vibration

Vibration analysis is one of the powerful tools that is currently used to monitor the mechanical integrity of wind turbines [38]. Vibration sensors installed on the casing of the wind turbine are used to detect faults within various wind turbine components such as gearbox, bearing, rotor and blade, tower, generator and main shaft [39]. There are three main types of vibration sensors: displacement sensors, velocity sensors and accelerometers. The signals acquired from accelerometer carry out the accelerated fault information and the amplitude of the accelerated signal demonstrates the fault severity level [40].

Installation of vibration sensors and required data acquisition devices increase the wiring complexity and capital cost of the technique. In addition, it is quite difficult to insert the sensors on the surface or into the body of the components. Moreover, if the sensors and data acquisition devices fail to provide signals, it may lead to the failure of wind turbine control, mechanical and electrical subsystems. Vibration signals are not capable of detecting incipient faults due to low signal to noise ratio (SNR).

4.2. Acoustic Emission

Acoustic emission sensors mounted on critical areas emit sound signals which are used to detect the structural defects of blades, gearbox, and bearings [41]. The signal acquired from small structural changes indicates an incipient structure damage or defect such as fatigue, crack, reduced stiffness and increased surface roughness [42]. Unlike vibration analysis, this technique is able to detect incipient faults at early stages. However, it requires a large number of sensors which increases the cost and complexity of the technique.

4.3. Strain

Fiber optic strain sensors are normally mounted on the surface of the wind turbine blade. The signal collected from the sensors provides information about the structural defects of the blades [43]. This technique has the ability to detect small structural changes, requires low sampling frequency, and has consistent performance over transmitting distance.

4.4. Torque and Bending Moment

There are two torque sensors, namely rotary torque and reaction torque sensors. Rotary torque sensors measure the torque signals whereas reaction torque sensors measure the bending moment signals. Electrical signals of a generator can also be used to calculate the torque that omits the requirement for sensors and reduces the capital costs [44]. Signature extraction of torque signal identifies mechanical failures. The frequency spectrum derived from the generator torque signal is also used to detect the generator mechanical faults [45].

4.5. Temperature

Temperature data are mainly used to detect faults within generators, bearings, gearbox and power converters [39]. A cost effective wind turbine thermal model is developed to diagnose the faults through temperature analysis based on the Supervisory control and data acquisition (SCADA) signal [46,47]. The SCADA signal provides reach information regarding faults of the wind turbine system with suitable signal processing methods. An electro-thermal model of DFIG is presented that reduce the cost of fault prevention and diagnosis for the wind turbine system [48]. SCADA data control sets are used to prevent and diagnose wind turbine faults by analyzing of the machine's temperature [49]. A generalized model is presented based on SCADA data analysis of ambient temperature and wind speed to predict the faults for wind turbine [50]. The performances of the model are compared with a real 1.5 MW DFIG based wind turbine system that shows more effective results than the conventional one. Although the technique is considered reliable and cost effective, its implementation is a bit complex. This technique cannot identify incipient faults and it is hard to identify the root cause and source of the temperature variation. Temperature detected by thermal sensors may rise due to nearby faulty components. Hence, the technique is unable to detect accurate fault locations. In addition, the thermal sensors are quite fragile in harsh environments.

4.6. Lubrication Oil Parameters

Lubrication oil parameters such as viscosity level, water content, particle count and identification, pressure and temperature are measured to detect defects of gearbox and bearing at early stages [44]. The condition of lubrication oil can be monitored in two ways; offline or online [51]. In the offline

monitoring, oil sample is taken for condition testing, typically every six months [48]. This may cause interruption to the overall system. In the online oil condition monitoring, oil sensors to detect level, dissolved particles, viscosity and temperature are utilized to reflect the oil condition in real time [48].

4.7. Non-Destructive Testing

Non-destructive testing (NDT) techniques such as X-ray inspection, infrared thermography, ultrasonic scanning, and tap test are used to detect hidden damages in composite materials [48,50,52]. However, implementation of the NDT techniques usually requires expensive instruments.

4.8. Eelectrical Signal-Based Methods

Electrical signal-based methods are widely used to detect various faults due to their distinctive advantages [37]. For example, the magnitudes of certain harmonic components in electrical current signal can be used to detect faults at early stages. Stator and rotor currents and stator voltages are measured to monitor the health condition of the generator [53]. A stator and rotor current based data technique is proposed to identify faults within the doubly fed induction generator (DFIG) [54]. Power signals calculated from voltage and current signals is used to detect rotor electrical imbalance as reported in [55]. Stator open circuit faults of DFIGs is detected using power and current spectra [33]. A mechanical fault or structural defect usually induces vibration of the component that can modulate generator electrical signals. This modulated signal involves fault related information of the mechanical components [56]. The P-amplitude of generator electrical signal indicates the rotor imbalance due to the increased blade surface roughness or yaw misalignment [57]. Electrical power spectral density indicates the reduction of blade stiffness [58]. The feature of bearing failure can be extracted by analyzing the phase and amplitude spectra of the generator's current signals which can be used to identify the development of bearing failures in an early stage [59]. Electrical signals are also used to detect the fault of gearbox and power electronic converter [56,60]. Compared to other signals, the electrical signal-based condition monitoring methods have significant advantages in terms of ease of implementation, less hardware complexity, less cost, more reliability and potentiality.

5. Signal Processing Methods

5.1. Hilbert Transform

Vibration of a faulty component modulates the electrical, vibration and torque signals and it is quite challenging to extract fault features from such signals to diagnose the faults. Hilbert transform is used to demodulate these signals and extract various faults features [61,62]. The Hilbert transform comprises Fourier transform and empirical mode decomposition (EMD) to generate frequency or time frequency domain spectra [63].

5.2. Envelope Analysis

The envelope of the vibration signal is analyzed to detect bearing faults of the wind turbine system [64]. This technique is able to detect both of the inner and outer bearing faults. In addition, it can detect and predict frets corrosion and assembly damage of bearings in early stages [65]. The technique is based on time domain signal that needs other signal processing methods to be further processed.

5.3. Statistical Analysis

The statistical analysis methods are quite mature techniques that are widely used in the commercial wind turbine system. Appropriate statistical features such as mean value, variance, crest factor, root-mean-square value, skewness and kurtosis are calculated from the base values stored in the healthy condition of wind turbine [66]. The deviations of these features from the reference values indicate faults within the wind turbine (WT). This method can only indicate the occurrence of a fault in

spite of revealing the detailed information of the fault location or mode. Moreover, statistical analysis methods are almost inapplicable in high-noise environments and they require large data sets.

5.4. Fast Fourier Transform (FFT)

Fourier analysis is probably the most frequently applied frequency analysis technique in digital systems. The variations of certain harmonic components of the frequency spectrum indicates a specific fault [53,57]. Though the classic FFT has the ability of frequency analysis for stationary signals, it cannot indicate the change in the frequency spectra for a nonstationary signal over time [62]. Therefore, FFT cannot reveal the hidden fault information in a nonstationary signal.

5.5. Synchronous Sampling

A wind turbine usually operates with variable rotating speeds that produce nonstationary vibration and electrical signals. The nonstationary signal characteristics can be converted to constant values through several synchronous sampling algorithms [60], after which classical FFT can be applied.

5.6. Short Term Fourier Transform (STFT)

Short term Fourier transform is used to detect faults such as open circuit and short circuit faults in the generator, rotor imbalance, structure damage in blades and gearbox tooth defects in the variable speed wind turbine system [33,65]. However, the resolutions of time and frequency are limited since the STFT is based on the window method.

5.7. Wavelet Transform

The wavelet transform divides a signal into different scale components with each assigned frequency. It is applied to monitor bearing failures in the generator and the gearbox [67–69]. This technique can also be used to detect the rotor electrical unbalance in an induction generator and rotor mass unbalance in a synchronous generator. Similar to STFT, wavelet transform is also restricted to time and frequency resolutions.

5.8. Model Based Methods

Accurate mathematical models are constructed to simulate the dynamic behaviors of a wind turbine [63]. The methods do not need high resolution signals [49,70] which removes the need for data acquisition hardware and installing additional sensors. However, it is quite challenging to design an effective model to mimic real-world applications.

5.9. Bayesian Method

The Bayesian method is used to predict the remaining useful life as well as faults of wind turbine blade [71], bearing [72], lubrication oil [73]. The accuracy of the methods mainly depends on the size of data samples and the availability of history of previous tests. This highlights the shortcoming of the real world application of this method due to the lack of prior data samples.

5.10. Artificial Intelligence Applications

Artificial intelligence (AI) is widely used to analyze condition monitoring data of a wind turbine [74]. This includes artificial neural networks (ANNs), expert systems, space vector modulations (SVMs), and fuzzy logic systems. ANNs are used to diagnose the fault of different wind turbine components such as generators, gearbox, bearings, and power electronics. The ANN based methods are time consuming and require a large amount of data to cover all possible conditions, which makes them impracticable.

In addition to the above condition monitoring techniques, several control techniques have been adopted to enhance the overall performance of the wind energy conversion systems [75–77], which is beyond the scope of this paper.

A summary of WT Faults, Signals and Signal processing methods is listed in Table 1 [78] while Table 2 presents the details of different signals. Table 3 presents a comparison of different signal processing methods for WT condition monitoring.

Table 1. Summary of Faults, Signals and Signal processing methods.

Component/Subsystem	Faults Occurred	Signals Monitored	Signal Processing Methods
Rotor	1. Fatigue 2. Crack 3. Surface roughness 4. Asymmetries 5. Reduced stiffness 6. Deformation	1. Vibration 2. AE 3. Strain 4. Torque 5. Electrical 6. NDT	1. Hilbert transform 2. Synchronous sampling 3. FFT 4. Wavelet transform 5. Model based method 6. AI
Gearbox	1. Gear tooth abrasion 2. Tooth crack 3. Tooth breakage 4. Tooth fracturing	1. Vibration 2. AE 3. Torque 4. Electrical 5. Temperature 6. Oil parameters	1. Hilbert transform 2. Synchronous sampling 3. FFT 4. Statistical 5. Model based method 6. AI
Bearing	1. Surface roughness 2. Fatigue, Crack, Breakage 3. Outer/inner race 4. Ball 5. Cage	1. Vibration 2. AE 3. Electrical 4. Temperature 5. Oil parameters	1. Hilbert transform 2. Synchronous sampling 3. FFT 4. Model based method 5. AI
Main shaft	1. Corrosion 2. Crack 3. Misalignment, Coupling failure	1. Vibration 2. Torque 3. Electrical	1. Synchronous sampling 2. Hilbert transform 3. FFT
Hydraulic system	1. Oil leakage 2. Sliding valve blockage	Pressure level	Threshold comparison
Mechanical Brake	1. Disc/caliper wear 2. Disc crack 3. Hydraulic section failure 4. Motor failure	1. Vibration 2. Temperature 3. Electrical	1. Statistical 2. FFT 3. Model based method 4. Threshold comparison
Tower	1. Corrosion 2. Crack 3. Structural damage	Vibration	1. FFT 2. Model based method
Generator	1. Open/short circuit 2. Insulation damage 3. Imbalance 4. Rotor bar broken 5. Bent shaft 6. Bearing failure 7. Air gap eccentricity 8. Magnet failures 9. Rotor mass imbalance	1. Vibration 2. Torque 3. Temperature 4. Oil parameters 5. Electrical	1. Synch. sampling 2. Hilbert transform 3. Envelope 4. Statistical 5. FFT 6. Wavelet transform 7. Model based method 8. Threshold comparison 9. AI
Power Converter	1. Capacitor 2. PCB 3. Semiconductor	1. Temperature 2. Electrical	1. Statistical 2. Model based method 3. Threshold comparison 4. AI
Sensors	1. Sensor 2. Data processing hardware 3. Communication 4. Software malfunction	All related signals	1. Statistical 2. Model based method 3. AI
Control system	1. Sensor 2. Actuator 3. Controller 4. Communication 5. Software malfunction	All related signals	1. Statistical 2. Model based method 3. AI

Table 2. Summary of different signals of condition monitoring for wind turbine (WT).

Signals Monitored	Advantages	Limitations
Vibration	1. Mostly dominated technique 2. Reliable 3. Ability to detect incipient fault 4. Standardized (ISO10816)	1. Expensive 2. Wiring complexity 3. Intrusive 4. Difficulties of sensor's installation 5. Subject to sensor failures 6. Inability to detect incipient faults
Acoustic Emission	1. Able to detect early-stage fault 2. High signal-to-noise ratio 3. Good for low-speed operation 4. Frequency range far from load perturbation	1. Expensive 2. Complex 3. Very high sampling rate required
Strain	1. Ability to detect small structural changes 2. Requirement of low sampling frequency 3. Consistent performance over transmitting distance	1. Complex 2. Intrusive 3. Expensive
Torque and Bending moment	1. Direct measurement of rotor load 2. No requirement of sensors 3. Cost effective	Intrusive
Temperature	1. Cost effective 2. Reliable 3. Standardized (IEEE 841)	1. Embedded temperature detector required 2. Inaccurate fault locations 3. Sensors are quite fragile in a harsh environment
Lubrication Oil	1. Early stage fault detection 2. Direct characterization of bearing condition	1. Limited to bearings with closed-loop oil 2. Supply system 3. Expensive for online operation
Non-Destructive Testing	Ability to detect hidden damages in composite materials	Requires expensive instruments
Electrical Signals	1. Widely used technique 2. Early stage fault detection 3. Less hardware complexity 4. Cost effective 5. More reliability 6. No additional sensor needed 7. Non-intrusive 8. Easy to implement	1. Displacement based rather than force based 2. Difficult to detect incipient faults 3. Sometimes low signal-to-noise ratio

Table 3. Comparison of different signal processing methods for WT condition monitoring.

Signal Processing Method	Function	Non-Stationary Signal Processing	Early Fault Prediction	Data Complexity	Resolution
Hilbert transform	Signal conditioning	Yes	Possible	Medium	High
Envelope Analysis	Feature extraction	Possible	Yes	Low/Medium	High
Statistical Analysis	Feature extraction	Possible	Possible	Low	Rely on input
FFT	Feature extraction	No	No	Medium	High
Synchronous sampling	Signal conditioning	Yes	Possible	Low/Medium	High
STFT	Feature extraction	Yes	Possible	High	Medium
Wavelet transform	Signal conditioning	Yes	Possible	Low/Medium	Medium
Model based methods	Feature extraction	Possible	Yes	Medium/High	Rely on input
AI	Feature extraction, diagnosis, prognosis	Possible	Possible	High	Rely on input
Bayesian Methods	prognosis	Possible	No	High	Rely on input

6. Conclusions

Due to the global trend in generating electrical energy through renewable energy resources, especially from solar and wind, the reliability of such systems has become a priority for the transmission and distribution networks' stakeholders. As such, reliable condition monitoring and fault diagnosis techniques have to be adopted to detect any incipient faults in these systems to avoid potential consequences. This paper presents a comprehensive review on common faults, signals and signal processing methods for condition monitoring and fault diagnosis of wind turbine systems. Advantages and limitations of each technique have been highlighted. The review shows that there is still a significant research gap in developing comprehensive, cost effective, online condition monitoring techniques for wind energy conversion systems. This may be attributed to a lack of field experience

and the complexity of developing such techniques for wind turbines, which are usually installed in remote locations and operate in harsh environments. With the advancement in power electronics, communication technology and sensors accuracy, reliable online condition monitoring for wind turbines will be viable in the near future.

Author Contributions: This paper is written by M.L.H. under the guidance of A.A.-S. whereas S.M.M. advises the summary as shown in Tables 1–3.

Funding: This paper is funded by Curtin International Postgraduate Research Scholarship (CIPRS) and Curtin Strategic International Research Scholarship (CSIRS).

Conflicts of Interest: Md Liton Hossain, on behalf of authors declares that there are no conflicts of interests.

References

1. Global Wind Report 2016—Annual Market Update. Global Wind Energy Council. Available online: http://gwec.net/publications/global-wind-report-2/global-wind-report-2016/ (accessed on 14 May 2018).
2. Kane, T. Clean Energy Australia Report. Clean Energy Council. Available online: https://www.cleanenergycouncil.org.au/policy-advocacy/reports/clean-energy-australia-report.html (accessed on 14 May 2018).
3. Qian, P.; Ma, X.; Cross, P. Integrated data-driven model-based approach to condition monitoring of the wind turbine gearbox. *IET Renew. Power Gener.* **2017**, *11*, 1177–1185. [CrossRef]
4. Bakar, N.A.; Abu-Siada, A.; Islam, S.; El-Naggar, M. A New Technique to Measure Interfacial Tension of Transformer Oil using UV-Vis Spectroscopy. *IEEE Trans. Dielectr. Electr. Insul.* **2015**, *22*, 1275–1282. [CrossRef]
5. Abu-Siada, A.; Hamood, S. A New Fuzzy Logic Approach to Identify Power Transformer Criticality using Dissolved Gas-in-Oil Analysis. *Int. J. Electr. Power Energy Syst.* **2015**, *67*, 401–408. [CrossRef]
6. Abu-Siada, A.; Arshad, M.; Islam, S. Fuzzy Logic Approach to Identify Transformer Criticality using Dissolved Gas Analysis. In Proceedings of the 2010 IEEE PES General Meeting, Providence, RI, USA, 25–29 July 2010.
7. Hashemnia, N.; Abu-Siada, A.; Mohammad, A.S.M.; Islam, S.M. Characterization of Transformer FRA Signature under Various Winding Faults. In Proceedings of the 2012 International Conference on Condition Monitoring and Diagnosis conference, Bali, Indonesia, 23–27 September 2012.
8. Hashemnia, N.; Abu-Siada, A.; Islam, S. Detection of Power Transformer Bushing Faults and Oil Degradation using Frequency Response Analysis. *IEEE Trans. Dielectr. Electr. Insul.* **2016**, *23*, 222–229. [CrossRef]
9. Tchakoua, P.; Wamkeue, R.; Tameghe, T.A.; Ekemb, G. A review of concepts and methods for wind turbines condition monitoring. In Proceedings of the World Congress on Computer and Information Technology (WCCIT), Sousse, Tunisia, 22–24 June 2013; pp. 1–9.
10. Qiao, W.; Lu, D. A Survey on Wind Turbine Condition Monitoring and Fault Diagnosis—Part I: Components and Subsystems. *IEEE Trans. Ind. Electron.* **2015**, *62*, 6536–6545. [CrossRef]
11. Hasanien, H.M.; Muyeen, S.M. Affine projection algorithm based adaptive control scheme for operation of variable-speed wind generator. *IET Gener. Transm. Distrib.* **2015**, *9*, 2611–2616. [CrossRef]
12. Yunus, M.S.; Masoum, M.A.S.; Abu-Siada, A. Application of SMES to Enhance the Dynamic Performance of DFIG during Voltage Sag and Swell. *IEEE Trans. Appl. Supercond.* **2012**, *22*. [CrossRef]
13. Joseph, A.; Chelliah, T.R. A Review of Power Electronic Converters for Variable Speed Pumped Storage Plants: Configurations, Operational Challenges and Future Scopes. *IEEE J. Emerg. Sel. Top. Power Electron.* **2017**, *PP*, 103–119. [CrossRef]
14. Rouco, L.; Chan, K.; Oesterheld, J.; Keller, S. Recent evolution of European grid code requirements and its impact on turbogenerator design. In Proceedings of the IEEE Power Energy Society General Meeting, San Diego, CA, USA, 22–26 July 2012; pp. 1–9.
15. Hasanien, H.M.; Muyeen, S.M. Design Optimization of Controller Parameters Used in Variable Speed Wind Energy Conversion System by Genetic Algorithms. *IEEE Trans. Sustain. Energy* **2012**, *3*, 200–208. [CrossRef]
16. Alharbi, Y.M.; Yunus, A.M.S.; Abu-Siada, A. Application of UPFC to Improve the LVRT Capability of Wind Turbine Generator. In Proceedings of the 2012 22nd Australasian Universities, Power Engineering Conference (AUPEC), Bali, Indonesia, 26–29 September 2012.

17. Yunus, A.M.S.; Abu-Siada, A.; Masoum, M.A.S. Application of STATCOM to Improve the Low-Voltage-Ride-Through Capability of Type-D Wind Turbine Generator. In Proceedings of the IEEE Innovation Smart Grid Technologies conference, Perth, WA, Australia, 13–16 November 2011.
18. Hahn, B.; Durstewitz, M.; Rohrig, K. Reliability of Wind Turbines. In *Wind Energy*; Springer: Berlin/Heidelberg, Germany, 2007; pp. 329–332.
19. Malik, H.; Mishra, S. Artificial neural network and empirical mode decomposition based imbalance fault diagnosis of wind turbine using TurbSim, FAST and Simulink. *IET Renew. Power Gener.* **2017**, *11*, 889–902. [CrossRef]
20. Zeng, J.; Lu, D.; Zhao, Y.; Zhang, Z.; Qiao, W.; Gong, X. Wind turbine fault detection and isolation using support vector machines and residual-based method. In Proceedings of the American Control Conference, Washington, DC, USA, 17–19 June 2013; pp. 3661–3666.
21. Helander, J.; Ericsson, A.; Gustafsson, M.; Martin, T.; Sjöberg, D.; Larsson, C. Compressive Sensing Techniques for mm-Wave Non-Destructive Testing of Composite Panels. *IEEE Trans. Antennas Propag.* **2017**, *65*, 5523–5531. [CrossRef]
22. Campbell, S. Annual Blade Failures Estimated at Around 3800. Available online: http://www.windpowermonthly.com/article/1347145/annual-blade-failures-estimated-round-3800 (accessed on 16 May 2018).
23. Salem, A.; Abu-Siada, A.; Islam, S. Improved condition monitoring technique for wind turbine gearbox and shaft stress detection. *IET Sci., Meas. Technol.* **2017**, *11*, 431–437. [CrossRef]
24. Blancke, O.; Merkhouf, A.; Amyot, N.; Pedneault-Desroches, J.; Hudon, C.; Haddad, K. Strategic fault diagnosis approach for hydrogenerator shaft current discharges. In Proceedings of the XXII International Conference on Electrical Machines (ICEM), Lausanne, Switzerland, 4–7 September 2016; pp. 2346–2351.
25. Marzebali, M.H.; Kia, S.H.; Henao, H.; Capolino, G.A.; Faiz, J. Planetary Gearbox Torsional Vibration Effects on Wound-Rotor Induction Generator Electrical Signatures. *IEEE Trans. Ind. Appl.* **2016**, *52*, 4770–4780. [CrossRef]
26. Wu, X.; Li, Y.; Li, F.; Yang, Z.; Teng, W. Adaptive estimation based leakage detection for a wind turbine hydraulic pitching system. *IEEE/ASME Trans. Mech.* **2012**, *17*, 907–914. [CrossRef]
27. Wang, L.; Wen, C. Fault diagnosis of wind turbine blade based on robust residual error design. In Proceedings of the 2016 Chinese Control and Decision Conference (CCDC), Yinchuan, China, 28–30 May 2016; pp. 574–577.
28. Entezami, M.; Hillmansen, S.; Weston, P.; Papaelias, M.P. Fault detection and diagnosis within a wind turbine mechanical braking system using condition monitoring. *Renew. Energy* **2012**, *47*, 175–182. [CrossRef]
29. Kilic, G.; Unluturk, M.S. Testing of wind turbine towers using wireless sensor network and accelerometer. *Renew. Energy* **2015**, *75*, 318–325. [CrossRef]
30. Yucai, W.; Yonggang, L. Diagnosis of short circuit faults within turbo generator excitation winding based on the expected electromotive force method. *IEEE Trans. Energy Convers.* **2016**, *31*, 706–713. [CrossRef]
31. Qiao, W.; Lu, D. A Survey on Wind Turbine Condition Monitoring and Fault Diagnosis—Part II: Signals and Signal Processing Methods. *IEEE Trans. Ind. Electron.* **2015**, *62*, 6546–6557. [CrossRef]
32. Djurovic, S.; Williamson, S.; Yang, W.; Tavner, P. Condition monitoring artifacts for detecting winding faults in wind turbine DFIGs. In Proceedings of the European Wind Energy Conference & Exhibition, Marseille, France, 16–19 March 2009; pp. 1–6.
33. Wang, H.; Liserre, M.; Blaabjerg, F. Toward reliable power electronics: Challenges, design tools, and opportunities. *IEEE Ind. Electron. Mag.* **2013**, *7*, 17–26. [CrossRef]
34. Ran, L.; Konaklieva, S.; McKeever, P.; Mawby, P. Condition monitoring of power electronics for offshore wind. *IET Eng. Technol. Ref.* **2014**, *1*, 1–10. [CrossRef]
35. Ribrant, J.; Bertling, L.M. Survey of failures in wind power systems with focus on Swedish wind power plants during 1997–2005. *IEEE Trans. Energy Convers.* **2007**, *22*, 167–173. [CrossRef]
36. Sepe, R.B., Jr.; Miller, J.M. Fault tolerant operation of induction motor drives with automatic controller reconfiguration. In Proceedings of the IEEE International Electric Machines and Drives Conference, Cambridge, MA, USA, 17–20 June 2001; pp. 156–162.
37. Bourogaoui, M.; Berriri, H.; Attia-Sethom, H.B.; Slama-Belkhodja, I. Wavelets and parity equations methods comparison for faulty encoder detection in PMSM drives. In Proceedings of the 8th International Multi-Conference on Systems, Signals and Devices, Sousse, Tunisia, 22–25 March 2011; pp. 1–7.

38. Wang, J.; Peng, Y.; Qiao, W. Current-Aided Order Tracking of Vibration Signals for Bearing Fault Diagnosis of Direct-Drive Wind Turbines. *IEEE Trans. Ind. Electron.* **2016**, *63*, 6336–6346. [CrossRef]
39. Caselitz, P.; Giebhardt, J. Rotor condition monitoring for improved operational safety of offshore wind energy converters. *J. Sol. Energy Eng.* **2005**, *127*, 253–261. [CrossRef]
40. Sorensen, B.F.; Rheinländer, J.; Rusborg, J. *Fundamentals for Remote Structural Health Monitoring of Wind Turbine Blades—A Preproject*; Tech. Rep. Risø-R-1336(EN); Riso Nat. Lab.: Roskilde, Denmark, 2002.
41. Yang, W.; Peng, Z.; Wei, K.; Tian, W. Structural health monitoring of composite wind turbine blades: Challenges, issues and potential solutions. *IET Renew. Power Gener.* **2017**, *11*, 411–416. [CrossRef]
42. Lu, B.; Li, Y.; Wu, X.; Yang, Z. A review of recent advances in wind turbine condition monitoring and fault diagnosis. In Proceedings of the 2009 IEEE Power Electronics and Machines in Wind Applications, Lincoln, NE, USA, 24–26 June 2009; pp. 1–7.
43. Yang, W.; Lang, Z.; Tian, W. Condition Monitoring and Damage Location of Wind Turbine Blades by Frequency Response Transmissibility Analysis. *IEEE Trans. Ind. Electron.* **2015**, *62*, 6558–6564. [CrossRef]
44. Lading, L.; McGugan, M.; Sendrup, P.; Rheinlander, J.; Rusborg, J. *Fundamentals for Remote Structural Health Monitoring of Wind Turbine Blades—A Pre-Project: Annex B—Sensors and Non-Destructive Testing Methods for Damage Detection in Wind Turbine Blades*; Tech. Rep. Risø-R-1341(EN); Riso Nat. Lab.: Roskilde, Denmark, 2002.
45. Wilkinson, M.R.; Spinato, F.; Tavner, P.J. Condition monitoring of generators and other subassemblies in wind turbine drive trains. In Proceedings of the IEEE International Symposium on Diagnostics for Electric Machines, Power Electronics and Drives, Cracow, Australia, 6–8 September 2007; pp. 388–392.
46. Zaher, S.; McArthur, S.D.J. A multi-agent fault detection system for wind turbine defect recognition and diagnosis. In Proceedings of the IEEE Lausanne Power Tech, Lausanne, Switzerland, 1–5 July 2007; pp. 22–27.
47. Qiu, Y.; Feng, Y.; Sun, J.; Zhang, W.; Infield, D. Applying thermophysics for wind turbine drivetrain fault diagnosis using SCADA data. *IET Renew. Power Gener.* **2016**, *10*, 661–668. [CrossRef]
48. Qiu, Y.; Zhang, W.; Cao, M.; Feng, Y.; Infield, D. An Electro-Thermal Analysis of a Variable-Speed Doubly-Fed Induction Generator in a Wind Turbine. *Energies* **2015**, *8*, 3386–3402. [CrossRef]
49. Astolfi, D.; Castellani, F.; Terzi, L. Fault Prevention and Diagnosis through Scada Temperature. *Diagnostyka* **2014**, *15*, 71–78.
50. Sun, P.; Li, J.; Wang, C.; Lei, X. A generalized model for wind turbine anomaly identification based on SCADA data. *Appl. Energy* **2016**, *168*, 550–567. [CrossRef]
51. Sheng, S. Investigation of oil conditioning, real-time monitoring and oil sample analysis for wind turbine gearboxes. In Proceedings of the AWEA Project Performance and Reliability Workshop, San Diego, CA, USA, 12–23 January 2011.
52. Liu, W.; Tang, B.; Jiang, Y. Status and problems of wind turbine structural health monitoring techniques in China. *Renew. Energy* **2010**, *35*, 1414–1418. [CrossRef]
53. Popa, L.M.; Jensen, B.B.; Ritchie, E.; Boldea, I. Condition monitoring of wind generators. In Proceedings of the IAS Annual Meeting on Conference Record of the Industry, Salt Lake City, UT, USA, 12–16 October 2003; pp. 1839–1846.
54. Bennouna, O.; Heraud, N.; Camblong, H.; Rodriguez, M. Diagnosis of the doubly-fed induction generator of a wind turbine. *Wind Eng.* **2005**, *29*, 431–447. [CrossRef]
55. Yang, W.; Tavner, P.J.; Crabtree, C.J.; Wilkinson, M. Research on a simple, cheap but globally effective condition monitoring technique for wind turbines. In Proceedings of the International Conference on Electrical Machines, Vilamoura, Portugal, 6–9 September 2008; pp. 1–5.
56. Lu, D.; Qiao, W.; Gong, X. Current-Based Gear Fault Detection for Wind Turbine Gearboxes. *IEEE Trans. Sustain. Energy* **2017**, *8*, 1453–1462. [CrossRef]
57. Trilla, L.; Pegueroles, J.; Urresty, J.; Muniz, C.; Gomis-Bellmunt, O. Generator Short-Circuit Torque Compensation in Multichannel Wind Turbines. *IEEE Trans. Ind. Electron.* **2017**, *64*, 8790–8798. [CrossRef]
58. Jeffries, W.Q.; Chambers, J.A.; Infield, D.G. Experience with bi-coherence of electrical power for condition monitoring of wind turbine blades. *Proc. Inst. Elect. Eng. Vis. Image Signal Process.* **1998**, *145*, 141–148. [CrossRef]
59. Watson, S.; Xiang, J. Real-time condition monitoring of offshore wind turbines. In Proceedings of the European Wind Energy Conference, Athènes, Greece, 27 February–2 March 2006; pp. 647–654.

60. Wang, Z.; Guo, Q. The diagnosis method for converter fault of the variable speed wind turbine based on the neural networks. In Proceedings of the 2nd International Conference on Innovative Computing, Informatio and Control, Kumamoto, Japan, 5–7 September 2007; p. 615.
61. Lu, D.; Qiao, W. Current-based fault detection for wind turbine systems via Hilbert-Huang transform. In Proceedings of the IEEE Power & Energy Society General Meeting, Vancouver, BC, Canada, 21–25 July 2013; pp. 1–5.
62. Gong, X.; Qiao, W. Current-based mechanical fault detection for direct-drive wind turbines via synchronous sampling and impulse detection. *IEEE Trans. Ind. Electron.* **2015**, *62*, 1693–1702. [CrossRef]
63. An, X.; Jiang, D.; Li, S.; Zhao, M. Application of the ensemble empirical mode decomposition and Hilbert transform to pedestal looseness study of direct-drive wind turbine. *Energy* **2011**, *36*, 5508–5520. [CrossRef]
64. Weller, N. Acceleration Enveloping—Higher Sensitivity, Earlier Detection. Available online: https://pdfs.semanticscholar.org/db43/651ab5ec66c49b48441512c3354b835ed385.pdf (accessed on 14 May 2018).
65. Jones, R.M. Enveloping for bearing analysis. *Sound Vib.* **1996**, *30*, 10–15.
66. Asian, S.; Ertek, G.; Haksoz, C.; Pakter, S.; Ulun, S. Wind Turbine Accidents: A Data Mining Study. *IEEE Syst. J.* **2017**, *11*, 1567–1578. [CrossRef]
67. Zimroz, R.; Urbanek, J.; Barszcz, T.; Bartelmus, W.; Millioz, F.; Martin, N. Measurement of instantaneous shaft speed by advanced vibration signal processing—Application to wind turbine gearbox. *Metrol. Meas. Syst.* **2010**, *18*, 701–712. [CrossRef]
68. Watson, S.J.; Xiang, B.J.; Yang, W.; Tavner, P.J.; Crabtree, C.J. Condition Monitoring of the Power Output of Wind Turbine Generators Using Wavelets. *IEEE Trans. Energy Convers.* **2010**, *25*, 715–721. [CrossRef]
69. Gray, C.S.; Watson, S.J. Physics of failure approach to wind turbine condition based maintenance. *Wind Energy* **2010**, *13*, 395–405. [CrossRef]
70. Yang, W.; Court, R.; Jiang, J. Wind turbine condition monitoring by the approach of SCADA data analysis. *Renew. Energy* **2013**, *53*, 365–376. [CrossRef]
71. Mirzaei, G.; Jamali, M.M.; Ross, J.; Gorsevski, P.V.; Bingman, V.P. Data Fusion of Acoustics, Infrared, and Marine Radar for Avian Study. *IEEE Sens. J.* **2015**, *15*, 6625–6632. [CrossRef]
72. Sharma, S.; Mahto, D. Condition monitoring of wind turbine gear box. *Int. J. Res. Stud. Sci. Eng. Technol.* **2014**, *1*, 33–51.
73. Zhu, J.; Yoon, J.M.; He, D.; Bechhoefer, E. Online particle- contaminated lubrication oil condition monitoring and remaining useful life prediction for wind turbines. *Wind Energy* **2015**, *18*, 1131–1149. [CrossRef]
74. Wu, Y.K.; Lee, C.Y.; Chen, C.R.; Hsu, K.W.; Tseng, H.T. Optimization of the Wind Turbine Layout and Transmission System Planning for a Large-Scale Offshore Wind Farm by AI Technology. *IEEE Trans. Ind. Appl.* **2014**, *50*, 2071–2080. [CrossRef]
75. Yunus, A.M.S.; Abu-Siada, A.; Masoum, M.A.S. Improving Dynamic Performance of Wind Energy Conversion System using Fuzzy-Based Hysteresis Current Controlled SMES. *IET Power Electron.* **2012**, *5*, 1305–1314. [CrossRef]
76. Yunus, S.; Abu-Siada, A.; Masoum, M. Effects of SMES on Dynamic Behaviours of type D-Wind turbine Generator-Grid connected during short circuit. In Proceedings of the 2011 IEEE Power & Energy Society General Meeting, Detroit, MI, USA, 24–28 July 2011.
77. Abdou, A.F.; Abu-Siada, A.; Pota, H.R. Improving the low voltage ride through of doubly fed induction generator during intermittent voltage source converter faults. *J. Renew. Sustain. Energy* **2013**, *5*. [CrossRef]
78. Tchakoua, P.; Wamkeue, R.; Ouhrouche, M.; Slaoui-Hasnaoui, F.; Tameghe, T.A.; Ekemb, G. Wind turbine condition monitoring: State-of-the-art review, new trends, and future challenges. *Energies* **2014**, *7*, 2595–2630. [CrossRef]