Kent Academic Repository

Full text document (pdf)

Citation for published version

Habib, Usman and Steeg, Matthias and Stöhr, Andreas and Gomes, Nathan J. (2017) Radio-over-fiber-supp 60GHz multiuser transmission using leaky wave antenna. In: 2017 International Topical Meeting on Microwave Photonics (MWP). IEEE ISBN 978-1-5386-0762-6.

DOI

https://doi.org/10.1109/MWP.2017.8305443

Link to record in KAR

https://kar.kent.ac.uk/72455/

Document Version

Author's Accepted Manuscript

Radio-over-Fiber-supported 60GHz Multiuser Transmission using Leaky Wave Antenna

Usman Habib[1], Matthias Steeg[2], Andreas Stöhr[2] and Nathan J Gomes[1]
[1]Communications Research Group, University of Kent, Canterbury, UK
[2] University of Duisburg-Essen, Lotharstraße 55, 47057 Duisburg, Germany
uh23@kent.ac.uk

***Abstract*— Simultaneous transmission to multiple users using a single-feed leaky-wave antenna (LWA) has been demonstrated. A composite signal transported through a Radio-over-Fibre (RoF) setup is upconverted to V-band frequencies and a LWA is used to direct different user data to their respective locations. An EVM analysis has been performed for two-user and three-user transmission for a range of angular locations. A performance analysis for user interference has been carried out by varying the signal spacing for 152 MHz and 305 MHz bandwidth OFDM signals, centered at 61.75 GHz after 4m of wireless transmission. The experimental results show degradation not only due to insufficient frequency spacing between the channels but also when the sidelobe interference of the neighboring data channels is higher.**

Keywords—Radio over Fiber, Leaky Wave Antenna, Error Vector Magnitude, Subcarrier Mulitple Access

I. INTRODUCTION

Millimeter-wave (mmW) frequencies offer large bandwidths to future mobile networks, which will face a huge demand for high data rates from users. This demand is expected to rise rapidly with the development of data rate hungry applications, such as augmented and virtual reality, in addition to the growth of services such as video streaming [1]. Large numbers of Remote Antenna Units (RAUs) can be expected in deployments for such systems, because the high propagation loss at mmW frequencies limits wireless distances in access networks, and the high density of devices will require limitation of the number per cell/access point in order to enable high user bit-rates. The cost of each RAU is a major factor to be considered in designing the whole system. These RAUs need to carry data from the Central Unit (CU) without performance degradation and to serve the large number of users connected to it [2, 3]. Radio-over-fiber (RoF) transport can serve as a low loss and efficient link between the CU and any of its RAUs. Analog RoF transport and simple photodetection at the RAU reduce the cost of RAUs by avoiding the costs of additional components such as Digital-to-Analog converters [4].

In order to serve multiple users, previous research has suggested transport of multiple data modulated signals over several fibers [5]. Work has been done on the use of DWDM to transport multiple signals over a single fiber [6], however, subcarrier multiplexing (SCM) is preferred due to the cost and stringent tolerances of the optical components for the DWDM based system [7]. Generation of a multicarrier signal in the RF domain and its analog transport over a single RoF link will be a cost effective approach, as demonstrated in [8], and could also leverage the advantages of subcarrier multiple access (SCMA). SCMA provides high level of independence among the channels (each channel can have different modulation format/data rate) and is an efficient way of transporting multi-user data channels within a specific band [9, 10]. But, there is a need to develop an efficient filtering/access mechanism to transport a particular channel to the intended user, particularly for mmW frequencies where the cost of components and filters is very high. The transmission of subcarrier multiplexed data-modulated mmW signals through a single RF link is proposed in this paper and includes generation of mmW multiplexed signals through upconversion of an IF composite signal via a single integrated transmitter and wireless transmission. Transmission to multiple users using a single transmitting antenna further reduces the cost and complexity of the RAU (single RF link) as compared to systems having multiple RF chains with high-cost mmW components. In this paper, we propose RoF transported multi-user transmission using a single leaky-wave antenna (LWA) at the RAU and perform analysis on multi-user transmission. Multiple users are served by the RAU at the same time by the LWA directing mmW frequencies in different directions to the users as shown in Fig. 1.

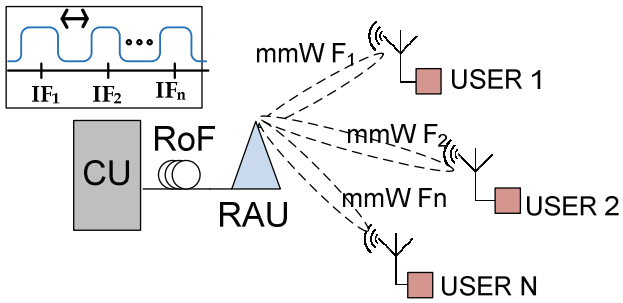

Fig. 1. Multi-user transmission supported by RoF setup

II. MULTI-USER TRANSMISSION

The experimental setup considered for the experimental work is shown in Fig. 2 where a composite multi-carrier signal is generated using an Arbitrary Waveform Generator AWG. OFDM symbols are loaded to the Tektronix 7122 AWG which generates an analog composite signal comprising of different user data signals. In the first case, for two-user transmission, the generated signal consists of two signals at 0.5GHz and 3GHz (shown in inset). The detailed parameters for the experiment are

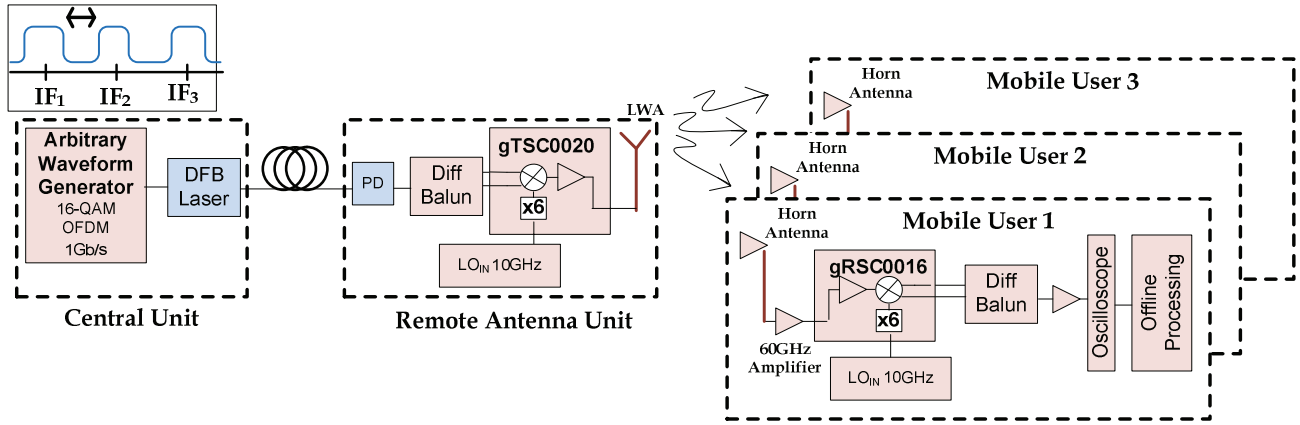

Fig. 2. Experimental Setup: RoF transport and mmW band Multiuser Transmission

given in Table 1. The multi-carrier signal is modulated onto a distributed feedback (DFB) laser to be transported over a single-mode fiber (SMF) link to the RAU. After detection at the photodiode (PD), the multi-carrier signal is upconverted to mmW frequencies of 60.5 GHz and 63 GHz using an integrated transmitter and is fed to the input port of the LWA. The LWA consists of an array of 20 cells and has been designed to direct 55-66 GHz frequencies in different directions with 61.3 GHz as the center frequency [11]. Wireless transmission of 2.5m distance is performed and a 20 dBi horn antenna is used as a receiver at the mobile unit. The received signal is amplified and down-converted by an integrated receiver. The IF signal is amplified by a 17 dB gain wideband amplifier and is captured by a Digital Oscilloscope (Tektronix DPO72304DX). Preambles and pilot tones in the OFDM signal are used for channel estimation. Performance is evaluated in terms of Error Vector Magnitude (EVM) for each user at different angular locations.

For the 3-user case, the multi-carrier signal comprises three signals centered at 0.5 GHz, 1.75 GHz and 3 GHz. After RoF transport, the composite signal is upconverted to mmW frequencies of 60.5 GHz, 61.75 GHz and 63 GHz and is transmitted through the LWA to the users.

Table. 1. Parameters for Experimental Setup

OFDM signal BW	305MHz (1Gb/s), 152MHz (0.5Gb.s)
FFT Size, CP	512, 1/8
Modulation	16-QAM
Fiber Length	2.2km
IF Frequencies	0.5GHz and 3GHz (2 users) 0.5GHz, 1.75GHz, 3GHz (3 users)
mmW Frequencies	60.5GHz and 63GHz (2 users) 60.5GHz, 61.75GHz, 63GHz (3 users)

III. RESULTS

The results after 2.5m wireless transmission for the two-user case are shown in Fig.3 in terms of the EVM performance of the users at different angular locations. EVM below 12.5% (the LTE limit for 16-QAM) has been obtained for both users when they were in the line of direction of their respective directed/transmitted beam. The transmitting LWA was placed on a tripod and was rotated to different angles with steps of 2 degrees to realize the transmission at different angular locations and measurements were taken for the 2 users. It can be seen from the figure that performance degrades significantly when the user is moved to 2 degrees from the direction of the beam due to the design of the LWA [11]. The difference in the performance of the two signals is due to limitations of the AWG in terms of signal generation (performance degrades for higher intermediate frequencies) and gain differences of the LWA due to the fabrication and experimental tolerances.

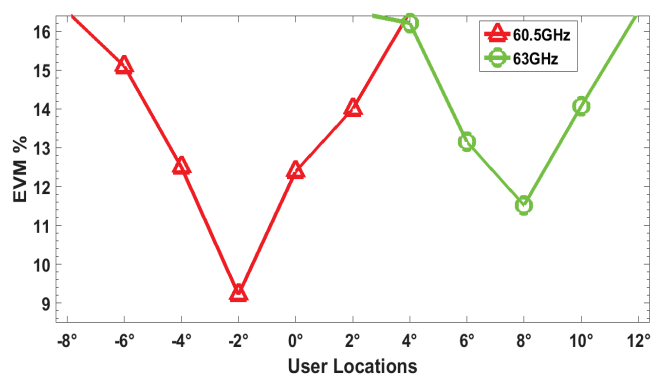

Fig. 3. EVM for 2-user transmission after 2.5m wireless transmission distance

Transmission for three users was performed using the same setup as described earlier to show the feasibility of the proposed multiuser transmission system. The LWA directs the three mmW frequencies to different directions and data is received at each user location. Fig. 4 shows the constellation diagrams of the three signals received at their respective angular location. Fig.5 shows the performance for the three users at each angular location. This shows that all three users can be served simultaneously using a single LWA. More users can be served using the same setup by generating the appropriate composite RF signal with additional data modulated signals.

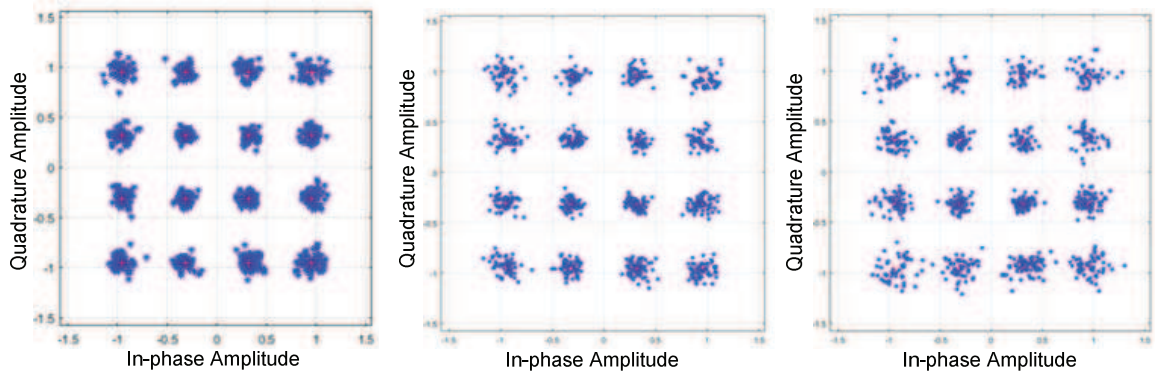

Fig. 4. Constellation of received signal for 60.5GHz user at -2° (Left), 61.75GHz user at 0° (center) and 63GHz user at 8° (right)

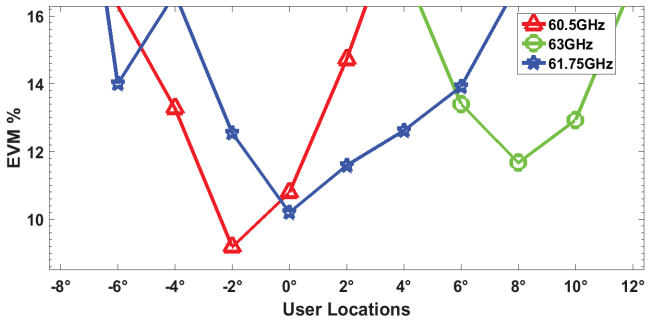

Fig. 5. EVM for three-user transmission after 2.5m wireless distance

IV. Effect of Signal Spacing for Multiuser Transmission

Multiple users can be served using the proposed system as described in earlier sections, however there will be a limit to the number of users that can be served due to the need to separate the signals in the frequency (and equivalently, angular) domain. Simulations for the LWA were carried out in HFSS® [11]. Fig. 6 shows the simulated radiation patterns for the LWA for 60.5GHz, 61.5GHz and 63GHz for the angular range of -8 to 12 degrees.

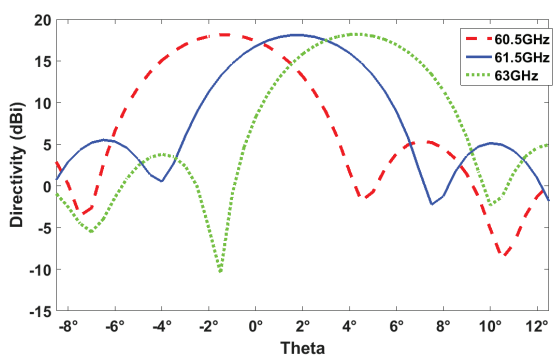

Fig. 6. Simulated radiation pattern of LWA (in dBi) for different angular locations for the 12 Element LWA

To analyze the effect of interference between the signals, performance analysis for a 152 MHz-wide OFDM signal centered at 61.75 GHz (IF of 1.75 GHz) is performed, with the addition of another signal of the same bandwidth on the lower frequency side of the spectrum (shown in inset of Fig.7). The transmission distance was increased to 4m by using a 22dB gain ZX60 (0.5GHz-2.5GHz) amplifier before the oscilloscope. For comparison, the baseline was chosen to be the single-user transmission performance, which was 6.8% EVM. Fig. 7 shows the EVM performance of the 61.75 GHz centered signal in a 2 user scenario (dotted line), when the spacing between the signals is varied from 50 MHz to 850 MHz. The best performance was obtained at the 450 MHz spacing. For the lowest value of spacing (50 MHz), a degradation in performance from inter-signal interference due to the overlap of the signals (as shown in Fig.6) is obtained as expected, but the performance degrades more when the channel spacing is between 150 and 350 MHz. The sidelobes from the other signals may have an effect as might the phase/timing of the interfering subcarriers of the OFDM signals being used. Thus an optimum spacing can be found which results in minimum interference. The interference effect is more severe in the case of three-user transmission, as shown in Fig. 7, as there is an additional interfering signal. Although the optimum spacing was found to be 600 MHz, when two signals of 152MHz bandwidth each are placed on each side of the 61.75 GHz signal, a possible operational spacing of 150 MHz is evident which would permit closer channel spacing, and enhanced spectral efficiency.

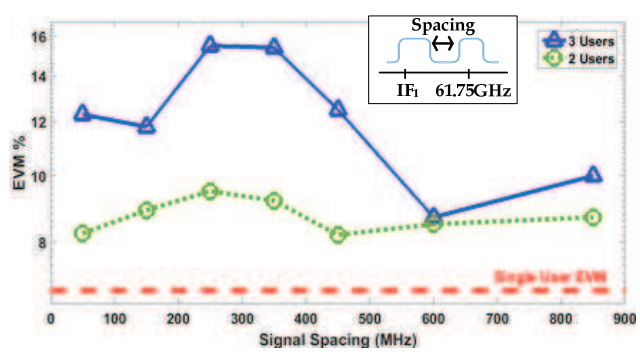

Fig. 7. Effect of Signal Spacing for 2-user and 3-user transmission after 4m wireless distance for 152MHz bandwidth OFDM signal (0.5Gb/s)

To observe the effect of signal spacing in more detail, the experimental analysis was then performed using a 305 MHz OFDM signal (capable of carrying 1 Gb/s per user) centered at 61.75 GHz. A 305 MHz signal was placed on the lower-frequency side of the 61.75 GHz signal to model the 2-user scenario. The considered baseline for the comparison is the performance for a single user transmission for a 305 MHz signal at 61.75 GHz, which was 8.46%. Fig. 8 shows (dotted line) the performance of the 61.7 5GHz signal in the two-user case (each with 305 MHz bandwidth) when the signal spacing was varied from 50 MHz to 850 MHz. The results show that good performance can be achieved with 250 MHz spacing, although performance degrades again at 350 MHz spacing, as there will be considerable overlap of the signals in the angular domain. In the case of 3 users, the additional interference with the wide bandwidth signals, causes considerable degradation in performance at smaller signal spacings and 450MHz spacing or higher is required to achieve EVM lower than the 12.5% limit. However, the results with such a spacing shows successful achievement of 3Gb/s overall aggregate data rate from the three users, each at 1Gb/s, using a single RF transmitter and antenna chain. This has also used only a part of the useable frequency range of the LWA, and a section of the angular locations possible. Total aggregate rates could be multiplied 2 or 3 times using the full ranges available. Of course, the trade-off for the system simplicity is the need for users to be separable in the angular domain, arbitrary positions will require the frequency separations of the signals to be selected according to these positions, rather than the spacings which give lowest EVM. Lower QAM levels such as QPSK (LTE EVM limit 17.5%) could be used if signals need to be spaced more closely to each other in this case.

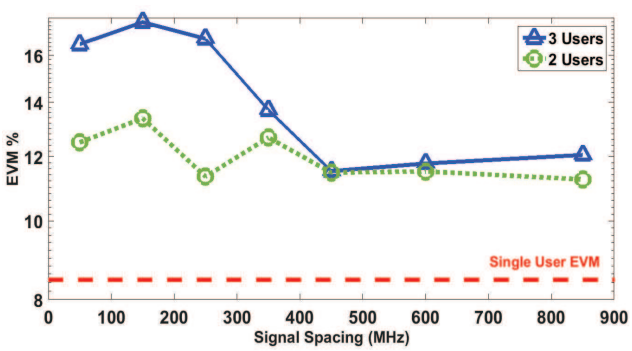

Fig. 8. Effect of Signal Spacing using Wider 305MHz Bandwidth Signal (1Gb/s) for 2 Users and 3 Users Transmission after 4m wireless distance

Future work may examine measurements of each of the user data signals in the 2-user or 3-user cases at the different angular locations, comparisons with LWAs having more elements (and hence more gain) and wireless transmission over longer distances.

V. Conclusions

Multi-user transmission at mmW frequencies with RoF transport has been presented. A low-cost RAU design has been proposed with the demonstration of multi-user transmission with a single RF chain having an integrated transmitter and a LWA. Experimental results show that multiple users, located at different directions, can be served at mmW frequencies. Analysis on the effect of inter-user interference with different signal frequency spacings has also been performed to investigate the effect of user interference and to find the spacing required for the best performance.

Acknowledgment

This work has been supported by the European Union's Horizon 2020 Research and Innovation programme under contract 643297 (RAPID). The authors are thankful to Prof. Stuart Walker and Mr. Terence Quinlan of the University of Essex, UK, for providing the integrated transmitter and receiver circuit boards.

References

[1] B. Bangerter, S. Talwar, R. Arefi, K. Stewart, "Networks and devices for the 5G era", IEEE Communications Magazine, Vol. 52(2), 2014, pp.90-96.

[2] A. Ng'oma, A, M. Sauer, "Radio-over-Fiber technologies for high data rate wireless applications", In IEEE Sarnoff Symposium (SARNOFF'09), USA, 2009, pp.1-6.

[3] G. Kalfas, N. Pleros, K. Tsagkaris, L. Alonso, C. Verikoukis, "Performance analysis of a medium-transparent MAC protocol for 60GHz radio-over-fiber networks", In IEEE Global Telecommunications Conference (GLOBECOM 2011), 2011, pp.1-5.

[4] D. Wake, A. Nkansah, N.J. Gomes, "Radio over fiber link design for next generation wireless systems", Journal of Lightwave Technology, Vol. 28(16), 2010, pp.2456-2464.

[5] J.C. Attard, J.E. Mitchell, "Optical network architectures for dynamic reconfiguration of full duplex, multiwavelength, radio over fiber", Journal of Optical Networking, Vol. 5(6), 2006, pp.435-444.

[6] M.P. Thakur, S. Mikroulis, C.C. Renaud, J.E. Mitchell, A. Stöhr, "DWDM-PON/mm-wave wireless converged next generation access topology using coherent heterodyne detection", In International Conference on Transparent Optical Networks (ICTON), Austria, 2014, pp. 1-3.

[7] N.J. Gomes, P.P. Monteiro, A. Gameiro, "Next generation wireless communications using radio over fiber", John Wiley & Sons, 2012.

[8] D. Wake, A. Nkansah, N.J. Gomes, G.De Valicourt, R. Brenot, M. Violas, Z. Liu, F. Ferreira, S. Pato. "A comparison of radio over fiber link types for the support of wideband radio channels", Journal of Lightwave Technology, vol. 28 (16), 2010, pp.2416-2422.

[9] C. Sierens, et al, "Subcarrier multiple access for passive optical networks and comparison to other multiple access techniques", IEEE GLOBECOM, USA, 1991.

[10] M. Zhu, L. Zhang, J. Wang, L. Cheng, L, C. Liu, G.K. Chang, "Radio-over-fiber access architecture for integrated broadband wireless services", Journal of Lightwave Technology, Vol. 31(23), 2013, pp.3614-3620.

[11] M. Steeg, B. Khani, V. Rymanov, A. Stöhr, "Novel 50–70 GHz compact PCB leaky-wave antenna with high broadside efficiency and low return loss", In IEEE 41st International Conference on Infrared, Millimeter, and Terahertz waves (IRMMW-THz), 2016, pp.1-2.