Проведено аналіз функціонування випарників абсорбційно-холодильних установок блоку вторинної конденсації типового для України агрегату синтезу аміаку. Обґрунтована необхідність мінімізації температури вторинної конденсації за рахунок створення автоматизованої адаптивної системи оптимального програмного управління. Встановлені рівняння для чисельної оцінки невизначеності теплового навантаження випарника та коефіцієнту теплопередачі. Розроблено алгоритмічне забезпечення щодо розв'язання задач ідентифікації та створення математичної моделі. Визначена технічна структура автоматизованої системи для їх реалізації

Ключові слова: виробництво аміаку, вторинна конденсація, математичне моделювання процесів теплообміну, автоматизована система

Проведен анализ функционирования испарителей абсорбционно-холодильных установок блока вторичной конденсации типового для Украины агрегата синтеза аммиака. Обоснована необходимость минимизации температуры вторичной конденсации за счет создания автоматизированной адаптивной системы оптимального программного управления. Установлены уравнения для численной оценки неопределенности тепловой нагрузки испарителя и коэффициента теплопередачи. Разработано алгоритмическое обеспечение для решения задач идентификации и создания математической модели. Определена техническая структура автоматизированной системы для их реализации

Ключевые слова: производство аммиака, вторичная конденсация, математическое моделирование процессов теплообмена, автоматизированная система

UDC 681.51:621.575:661.53
DOI: 10.15587/1729-4061.2018.121711

IDENTIFICATION OF HEAT EXCHANGE PROCESS IN THE EVAPORATORS OF ABSORPTION REFRIGERATING UNITS UNDER CONDITIONS OF UNCERTAINTY

A. Babichenko
PhD, Associate Professor*
E-mail: babichenko_a_k@ukr.net
J. Babichenko
PhD, Associate Professor
Department of Thermal Engineering and heat engines
Ukrainian State University of Railway Transport
Feierbakha sq., 7, Kharkiv, Ukraine, 61050
E-mail: juliette-ua@ukr.net
Y. Kravchenko
Postgraduate student*
E-mail: kravchenko_y_o@ukr.net
S. Velma
PhD, Associate Professor
Department of Pharmacological Informatics
National University of Pharmacy
Pushkinska str., 53, Kharkiv, Ukraine, 61002
E-mail: 0679267726.lana@gmail.com
I. Krasnikov
PhD, Associate Professor*
E-mail: ikligor@gmail.com
I. Lysachenko
PhD, Associate Professor*
E-mail: Ihor.Gr.Lis@gmail.com
*Department of Automation engineering systems and environmental monitoring
National Technical University "Kharkiv Polytechnic Institute"
Kyrpychova str., 2, Kharkiv, Ukraine, 61002

1. Introduction

One of the main products of chemical industry is synthetic ammonia. A continuous increase in the manufacturing of this product is caused by the need to improve the yield of crops through the introduction of nitrogen-containing fertilizers into soil. This necessity, in turn, is associated with an anticipated growth of the global population of up to 9.6 billion by 2050 [1]. Given this, as well as the large amount of arable fertile land, ammonia and fertilizers in Ukraine will always be a strategic commodity that determines the economic security of the state.

Almost all modern units for ammonia synthesis, including those operating in Ukraine, are complex energy-technological complexes with capacity of 450 thousand tons per year, with many branches and interrelations between them [2]. Under such circumstances, even a slight change in the values of technological parameters in a separate unit or at a facility may cause significant economic losses due to the impact of external disturbances. One of such units of aggregates of series

AM-1360, operating in Ukraine, is the secondary condensation unit. In this unit, the circulating gas (CG) is cooled in the evaporators of the absorption-refrigeration units (ARU), while the regeneration of cold and separation of condensed ammonia occurs in the condensation column. Such a unit operates under conditions of a constant change in the external heat load on evaporators and is characterized by instability. As a result of this, a temperature of CG cooling Θ_{2CG} varies in a rather wide range from – 8 °C to 5 °C [3]. According to available studies, an increase in this temperature even by 1 °C decreases energy efficiency of the synthesis aggregate due to an increase in the consumption of natural gas by the additional steam boiler by 307.3 thousand nm^3 per year. This steam boiler enables obtaining high pressure water vapor (10.5 MPa), which is used to drive a centrifugal compressor of nitrogen-hydrogen mixture (NHM) and CG compression [4]. That is why minimization of the CG cooling temperature mode in evaporators of ARU through creation of high-quality automated adaptive system of optimal control becomes especially relevant for improving energy efficiency of ammonia production.

2. Literature review and problem statement

Construction of a high-quality automated adaptive system for the optimization of the operation mode of a control object under modern conditions is solved using a systems approach [5]. From the perspective of this approach, solution to the problems on minimization (optimization) of the CG cooling temperature mode and on increasing economic efficiency of production requires creation of a mathematical model of the evaporator.

The evaporator operates under conditions of seasonal and daily changes in external heat load, which causes uncertainty of the basic relation parameter of the mathematical model – a heat transfer coefficient. That is why numerical assessment of such an uncertainty requires development of the automated adaptive system for parametric identification of heat exchange processes in the evaporator under existing operating conditions.

The purpose and the place of the mathematical model are illustrated visually by the generalized structure of the adaptive system of optimization of operation mode of the control object, which is shown in Fig. 1 [6].

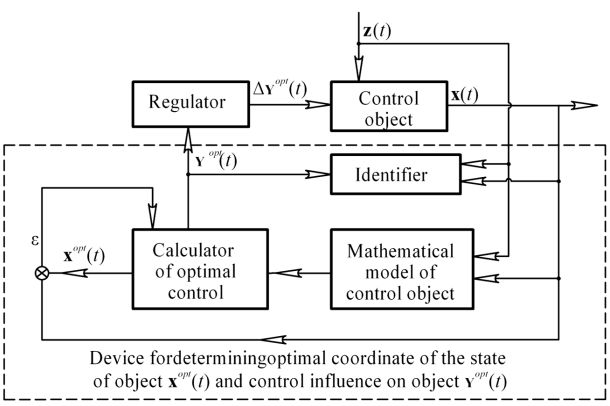

Fig. 1. Generalized structure of adaptive system for the optimization of operation mode of control object: $\varepsilon=\left[\mathbf{x}(t)-\mathbf{x}^{\text{opt}}(t)\right]$ – deviation; $\mathbf{Y}^{\text{opt}}(t)$ – control influence, which corresponds to vector $\mathbf{x}^{\text{opt}}(t)$; $\Delta\mathbf{Y}^{\text{opt}}(t)$ – correcting control influence; t – time

As regards the evaporator, a problem on the synthesis of an algorithm for the minimization of CG cooling temperature under certain restrictions can be in general shown in the following way:

$$\varphi(\mathbf{x},\mathbf{Y},\mathbf{z})\rightarrow\min(extr)\Rightarrow\mathbf{x}^{opt}, \quad (1)$$

$$\mathbf{x}=F(\mathbf{Y},\mathbf{z}), \quad (2)$$

where φ is the objective function; **x, z** are the vectors of coordinate in accordance with the state of the object and disturbances of certain dimensionality; **Y** is the vector of control influences; F is the operator of the mathematical model of an evaporator.

Evaporators are pipe-casing heat exchangers of the immersion type with U-shaped pipes. CG is cooled in the pipe space due to ammonia, which boils in the inter-pipe space. A peculiarity of the process of liquid ammonia evaporation (refrigerant) is connected to the fact that it arrives to the evaporator with water admixtures. To extract water, the process of phlegm drainage out of the evaporator is implied [7]. In this case, insufficient phlegm drainage causes water accumulation in the evaporator. The latter leads to a decrease in ammonia concentration, an increase in pressure and temperature mode of cooling and, consequently, a decrease in cold production. Excessive drainage causes a loss of refrigerant, which decreases cold production and temperature mode of cooling. Thus, phlegm consumption $M_F(t)$ is one of the main control vectors that determines the optimal state vector $\mathbf{x}^{opt}$. However in periodicals there is virtually no information as for determining of quantitative dependence of influence of consumption $M_F(t)$ on efficiency of the heat exchange process, and therefore, temperature mode of CG cooling. This absence is caused by a wide use of ARU with small low cold productiveness. In such units, phlegm is periodically drained and the impact of this process on the cost of production is not so significant [8]. For ARU with high cold productiveness, of more than 3 MW, which are used in ammonia production, this effect can be quite significant. Solution of the problem of determining of quantitative dependence of the influence of control vector $M_F(t)$ on optimal vector of state $\mathbf{x}^{opt}$ requires construction of the mathematical model and implementation of identification heat exchange processes of the evaporator.

Another feature of evaporators, as well as of the secondary condensation unit in general, lies in operation condition, in particular constant changes at the external heat load inlet as a result of application of primary condensation of air cooling of the CG flow at the previous stage. In this case, temperature of CG and ammonia concentration in CG at the unit's inlet varies respectively in the ranges of 35÷45 °C and 9÷12 % by volume, and therefore at the ARU evaporator inlets. It was found in the previous research into condensation columns that an increase in this concentration affects not only an increase in heat load, but also an increase in heat transfer coefficient due to formation of additional condensation thermal resistance [4]. In this case, uncertainty of the latter can be numerically evaluated by statistical methods when there is information about the magnitude of voluminous ammonia concentration in CG at the evaporator inlets at certain moments of time $a^{IN}_{NH_3}$.

The easiest way to resolve this uncertainty would be the application of an automatic analyzer. However, application of this method is prevented by the conditions of measurement,

in particular presence of ammonia in the form of vapor-liquid mixture and too high CG pressure. In this regard, it is significant that in existing synthesis units, measurement of ammonia concentration in CG is carried out using periodic lab tests only once a day. Under such conditions and at existing daily fluctuations of atmospheric air temperature, this method causes complete uncertainty of ammonia concentration in CG at the inlets of the evaporators. This leads to impossibility of providing for real-time identification of heat processes in description of the mathematical model of the evaporator, and therefore the necessary correction of the optimal vector of state $\mathbf{x}^{opt}(t)$. Thus, the problem of identification of processes of the mathematical model is complicated by the presence of interconnected uncertainties, the solution of which requires numerical assessment.

An analysis of the stated above indicates that numerical estimation of uncertainty can be performed by constructing a mathematical model. For this, it is possible to use the existing database of lab tests for a certain period of time on ammonia concentration in CG at the outlet of the primary condensation unit, and therefore at the evaporator inlet.

The primary condensation unit, which includes air cooling apparatuses and the separator for condensed ammonia separation make up a stochastic object. A change of ammonia concentration in CG at its outlet takes place under conditions of constant influence of random disturbing factors (atmospheric air temperature and humidity). This causes the random nature of pressure P_{PC} and primary condensation temperature Θ_{PC}, which, as it is known, determine the amount of concentration $a_{NH_3}^{IN}$ at the outlet of the unit, and therefore at the evaporator inlet. In the end, parameter $a_{NH_3}^{IN}$ due to this influence has a probabilistic character [9]. Under such conditions, to solve the problem of numerical evaluation of uncertainty of ammonia concentration in CG, it is most advisable to use the statistical method of mathematical modeling, sufficiently tested under practical conditions [10]. However, in this publication, like in the others [11], the method of statistical modeling is used for numerical evaluation of uncertainty of only one parameter. In this case, numerical estimation of uncertainty of ammonia concentration at the evaporator inlet $a_{NH_3}^{IN}$ influences uncertainty of heat transfer coefficient K. However, information on numerical evaluation of related uncertainties was not found in literature and requires development of a separate algorithm of research in terms of possibility of its application for creation of an adequate mathematical model.

Thus, the established relationship of uncertainties of heat transfer coefficient and ammonia concentration in CG at the inlet and numerical estimation of uncertainties acquires special significance in the overall process of creation of an automated system for operative obtaining of the mathematical model of the evaporator.

3. The aim and objectives of the study

The aim of present research is to create an automated system for identification of the heat exchange process of evaporators ARU and operatively obtain its mathematical model. This will provide for a possibility to develop an automated adaptive system of minimization of temperature operation mode of the evaporator, and therefore increase energy efficiency of the secondary condensation unit in ammonia production.

To accomplish the set aim, the following problems are to be solved:

– based on the data of industrial operation, to study efficiency of heat exchange processes of the evaporator with determining of its basic indicator – heat transfer coefficient;

– to establish in the process of solution of the problem of identification of the mathematical model of the evaporator the equation for numerical evaluation of uncertainty of heat transfer coefficient and condensing thermal resistance coefficient;

– to establish the equation for numerical evaluation of uncertainty of ammonia concentration in CG at the outlet of the primary condensation unit, and therefore at the evaporator inlet, and analyze the possibility of using the equation for identification of the heat exchange process of the evaporator at the existing relationship of this concentration and condensation thermal resistance;

– to develop algorithmic support for solving the problems of identification and operative creation of the mathematical model of the evaporator with determining of the technical structure of the automated system for implementation.

4. Materials and methods for studying condensation units

The studies were conducted on the sections of primary and secondary condensation of the industrial synthesis unit of AM-1360 series by the method of passive experiment [12]. Obtaining of information about parameters of functioning of these sections was carried out using the microprocessor information and control complex TDC-3000 (USA) of the central control point and laboratory analyses.

The composition of circulating gas was determined through laboratory analyses by the generally known technique, considered in detail [3]. In this case, due to the fact that under existing industrial conditions, sampling for laboratory testing was made only once a day, frequency of collection of all the other data on operation parameters was also once a day. Numerical evaluation of uncertainties was carried out at two stages. At stage 1, the equation for calculation of ammonia condensation in CG at the outlet of the primary condensation unit was established. At stage 2, efficiency of the heat exchange process with establishment of equations for calculation of heat transfer coefficient was determined.

4. 1. Technique for numerical evaluation of uncertainty of ammonia concentration in circulating gas

Sampling of up to 100 modes is previously formed by the database of the information and control complex TDS-3000. Frequency of getting of concentration a_{NH_3} to the extreme quantum ν is determined from the plotted distribution histogram. Assigning probability P_x=0.95 that during N observations, variable a_{NH_3} will be found at least one time both in the upper and lower quanta, distribution parameter λ is calculated from somewhat converted Poisson formula:

$$P_x = \left(1 - e^{-\lambda}\right)^2. \quad (3)$$

On condition that data collection period τ=24 h according to lab tests and frequency ν according to the histogram, average frequency of getting δ of variable a_{NH_3} to the extreme quantum per unit of time is determined from equation:

$$\delta = \nu / \tau. \quad (4)$$

Complete time T (h) and the required number N of observations will be derived from the following equations:

$$T = \lambda / \delta; \quad (5)$$

$$N = T / \tau. \quad (6)$$

Evaluation of quality of obtained information was verified based on satisfaction of a condition for a measurement error, which should not go beyond the range of measurement of technological parameters.

Reproducibility of the process (homogeneity of variances in the sampling) was verified by the Cochrane criterion, which is calculated from formula:

$$G_c = \frac{\max\left\{\sigma_i^2(a)\right\}}{S_a^2}, \quad (7)$$

$$S_a^2 = \sum_{i=1}^{k} \sigma_i^2(a), \quad (8)$$

$$\sigma_i^2(a) = \frac{1}{m-1} \cdot \sum_{j=1}^{m} \left(a^{ij} - \overline{a^i}\right)^2, \quad (9)$$

$$\overline{a^i} = \frac{1}{m} \cdot \sum_{j=1}^{m} a^{ij}, \quad (10)$$

where i=1÷k is the number of series, into which experimental data in the sampling were divided; j=1÷m is the number of experimental data in each series; a is the ammonia concentration in CG.

Calculation value G_c was compared to table value G_t at the number of freedom degrees k, m and level of significance of 5 %. In case $G_c<G_t$, the process should be considered reproducible.

Process stationarity was verified by the Fisher criterion, which takes the form of the dispersed ratio and is determined from the following equation:

$$F_c = \sigma_\Sigma^2 / \sigma_0^2, \quad (11)$$

$$\sigma_0 = S_a^2 / k, \quad (12)$$

$$\sigma_\Sigma^2 = \frac{m}{k-1} \cdot \sum_{i=1}^{k} \left(\overline{a^i} - \overline{a^{ij}}\right), \quad (13)$$

$$\overline{a^{ij}} = \frac{1}{k} \cdot \sum_{i=1}^{k} \overline{a^i}. \quad (14)$$

The resulting value of F_c was compared to table value F_t at the number of degrees of freedom (k–1) and k·(m–1) and significance level of 5 %. The process is considered stationary if $F_c<F_t$.

The hypothesis about normality of empirical distribution was verified by goodness-of-fit test, according to which this hypothesis is accepted in case of satisfaction of the following conditions for random asymmetry A and excess E:

$$|A| \le 3\sqrt{\sigma(A)}, \quad (15)$$

$$|E| \le 5\sqrt{\sigma(E)}. \quad (16)$$

Random asymmetry and excess, as well as theoretical variances of asymmetry $\sigma(A)$ and excess $\sigma(E)$, are calculated from the following formulas:

$$A = \frac{1}{N \cdot \sigma_a^3} \sum_{u=1}^{N} \left(a_u - \overline{a_u}\right)^3, \quad (17)$$

$$E = \frac{1}{N \cdot \sigma_a^4} \sum_{u=1}^{N} \left(a_u - \overline{a_u}\right)^4 - 3, \quad (18)$$

$$\sigma(A) = \frac{6 \cdot (N-1)}{(N+1) \cdot (N+3)}, \quad (19)$$

$$\sigma(E) = \frac{24 \cdot N \cdot (N-2) \cdot (N-3)}{(N+1)^2 \cdot (N+3) \cdot (N+5)}, \quad (20)$$

where σ_a is the root-mean-square deviation of the input parameter relative to the average one.

Numerical estimation of ammonia concentration in CG at the outlet of the primary condensation unit was carried out from for preliminarily established functional dependence:

$$a_{NH_3}^{IN} = f\left(P_{PC}, \Theta_{PC}\right). \quad (21)$$

Determining of quantitative characteristics for this dependence was performed using the methods of correlation and regression analyses. Verification of the regression equation was carried out using the Fisher criterion according to the following variance ratio:

$$F_a = \frac{\sigma_a^2}{\sigma_3^2}. \quad (22)$$

In this regard, residual variance σ_3^2 is determined from equation:

$$\sigma_3^2 = \frac{1}{N-b-1} \sum_{u=1}^{N} \left(a_u - a_u^c\right)^2, \quad (23)$$

where b=2 is the number of factors; a_u^c is the magnitude of concentration by the resulting regression equation according to dependence (21); u is the observation for a certain mode.

The resulting value was compared to table value F_{at} at the number of degrees of freedom N–1 and N–b–1 and significance level of 5 %. The regression equation makes sense if $F_a>F_{at}$.

4. 2. Determining efficiency of heat transfer process in evaporators

Efficiency of the heat transfer process was assessed by heat transfer coefficient K_E (W(m^2·K)) from the following equations, sufficiently tested under practical conditions:

$$K_E = \Phi_O / F \cdot \Delta\Theta_{MLD}, \quad (24)$$

$$\Phi_O = M_G \cdot C_G^A \cdot \left(\Theta_{1CG} - \Theta_{2CG}\right) + M_{CS} \cdot C_C^A \cdot \left(\Theta_{1CG} - \Theta_{2CG}\right) + M_C \cdot r^A + M_V \cdot C_V^A \cdot \left(\Theta_{1CG} - \Theta_{2CG}\right), \quad (25)$$

$$M_C = 0{,}771 \cdot V_{CG}\left(a_{NH_3}^{VIN} - a_{NH_3}^{VOUT}\right), \quad (26)$$

where Φ_O is the cold productivity, W; F is the heat transfer surface of the evaporator, m^2; $\Delta\Theta_{MLD}$ is the mean logarithmic temperature difference, °C; M_G, M_{CS}, M_C, M_V are the mass consumption of correspondent gas phase of CG, average of ammonia condensate, condensed ammonia and vapor phase of ammonia in CG, kg/s; C_G^A, C_C^A, C_V^A are the average specific thermal capacities according to gas phase of CG, ammonia condensate and ammonia vapor, kJ/(kg·K); r^A the average heat of ammonia condensation, kJ/kg; Θ_{1CG}, Θ_{2CG} are the temperatures of CG at the evaporator inlet and outlet respectively, °C; V_{CG} is the volumetric CG consumption, nm^3/s, $a_{NH_3}^{VIN}$, $a_{NH_3}^{VOUT}$ are the concentrations of ammonia vapor in CG at the inlet and at the outlet respectively, % by volume.

To assess differences between the estimated and actual indicators of heat exchange efficiency, total thermal resistance R_T^E (m^2·K/W) was determined from the formula:

$$R_T^E = \frac{1}{K_E} - \left[\frac{1}{\alpha_{IP}} + \frac{1}{\alpha_P}\right]. \quad (27)$$

In this case, the value of thermal efficiency coefficients from the circulating gas (pipe space) α_P and boiling ammonia (inter-pipe space) α_{IP} was determined by the generally known equations of Krausold and Kupriyanov, accepted at design. Basic equations for calculation of thermal efficiency coefficients have the form:

$$\alpha_P = A \cdot W_P^{0,8} \cdot d_{IN}^{-0,2}, \quad (28)$$

$$\alpha_{IP} = 2{,}2 \cdot q_F^{0,7} \cdot P_{IP}^{0,21}, \quad (29)$$

$$A = 16{,}28 \cdot \left(\lambda_{CG}/\mu_{CG}^{0,8}\right) \cdot (\mathrm{Pr}/0{,}73)^{0,4}, \quad (30)$$

where W_P is the specific velocity of CG per unit of surface in the pipe space, kg/m^2·s; d_{IN} is the internal diameter of pipes, m; q_F is the specific thermal flow, W/m^2; λ_{CG} is the thermal conductivity of CG, W/(m·K); μ_{CG} is the dynamic viscosity of CG, Pa·s; Pr is the Prandtl criterion. .

5. Results of research into numerical evaluation of uncertainties

Based on the results of experimental research, sampling by 100 and 15 operation modes was formed in accordance with the primary condensation unit and the evaporator of the secondary condensation unit, some of which are shown in Table 1.

Fig. 2 shows the histogram of ammonia concentration distribution in CG $a_{NH_3}^{IN}$ at the outlet of the primary condensation unit for sampling by 100 modes. Analysis of the distribution histogram indicates that frequency ν=0.08. Then for probability P_X=0,95 according to formula (3), parameter λ=3.68. According to the existing information collection period τ=24 h, duration T of collection of experimental data in accordance with equations (4) and (5) will be 1,115 hrs. According to formula (6), N=50 modes will be obtained within this time, that is, 50 days is enough to obtain the sampling, and the array can be updated monthly.

Table 1

Experimental data on the operation modes of primary condensation unit and evaporator

Parameters			Mode numbers						
			1	2	3	4	5*	6*	7
CG at outlet of primary condensation unit	Consumption V_{OCG} 10^{-3}, nm^3/h		639.2	638.4	643.4	631.0	623.4	640.0	634.8
	Pressure P_{PC}, MPa		22.1	22.0	22.2	22.0	22.7	22.4	24
	Temperature Θ_{PC}, °C		28	36	29	30	25	29	22
	Concentration, % by volume	$a_{H_2}^{in}$	55.7	56.0	55.6	56.8	57.2	56.2	56.2
		$a_{N_2}^{in}$	18.9	18.9	19.2	17.6	18.8	19.5	20.0
		$a_{CH_4}^{in}$	8.4	8.3	8.7	8.8	8.0	7.7	8.4
		a_{Ar}^{in}	6.9	6.9	6.7	6.8	6.9	6.8	7.3
		$a_{NH_3}^{in}$	10.1	9.9	9.8	10.0	9.1	9.8	8.1
CG temperature	at evaporator inlet Θ_{1CG}, °C		16	23	15	18	13	18	18
	at evaporator outlet Θ_{2CG}, °C		–5	–1	–8	–6	–3	4	–6
CG consumption at evaporator inlet V_{CG}·10^{-3}, nm^3/h			319.6	316.2	321.7	315.5	311.7	320.0	317.4
CG Pressure P_{CG}, MPa			23.5	23.0	23.0	22.7	23.5	23.8	24.8
Inter-pipe space of evaporator at connection to circuit of two ARU	Pressure of refrigerant boiling P_{IP}, MPa		0.19	0.25	0.17	0.20	0.20	0.25	0.20
	Temperature of refrigerant boiling Θ_{IP}, °C		–13	–8	–15	–13	–8	–2	–12
	Refrigerant concentration at the inlet ξ_X^{IN}, kg/kg		0.989	0.991	0.993	0.995	0.997	0.996	0.995
	Phlegm consumption M_R, t/h		0.902	1.158	0.541	0.465	0.102	0.142	0.937
	Consumption of refrigerant at the inlet M_X^{IN}, t/h		15.995	19.174	16.885	17.507	10.878	10.410	17.313
	Temperature of liquid refrigerant at the inlet Θ_X^{IN}, °C		26	28	29	27	20	25	27

*Note: * – only one ARU was in operation*

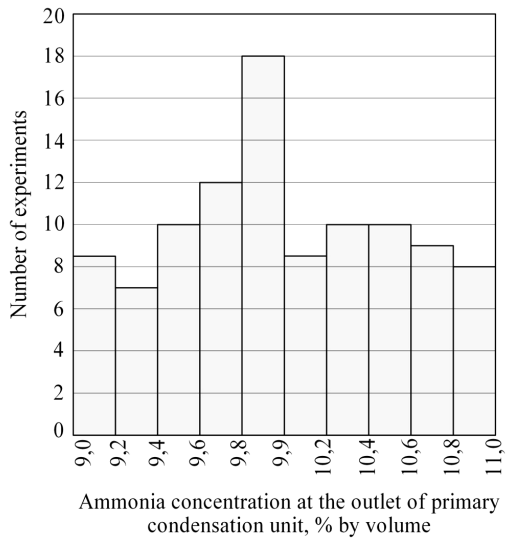

Fig. 2. Histogram of ammonia concentration distribution in CG at the outlet of the primary condensation unit for 100 modes

Comparative analysis of the ranges of measurements of the sampling's parameters showed that the range of measurement errors prevails. Separate generalized results of verification of reproducibility, stationarity and normality of empirical distribution, observed for concentration $a^{IN}_{NH_3}$, are presented in Table 2. In this case, the sampling was divided into four data series at three averaging in each series (i=4, j=3).

Table 2

Generalized indicators of quality of obtained information

Indicator		Designation	Numeric value
Mean value of concentration		$\overline{a_{ij}}$	9.85
Maximum sample variance for a separate series		$\sigma_i^2(a)$	0.45
Total of variances		S_a^2	1.002
Cochrane criterion	calculation	G_c	0.4491
	table	G_t	0.6841
Reproducibility variance		σ_0^2	0.25
Residual variance		σ_Σ^2	0.2041
Fisher criterion	calculation	F_c	0.8164
	table	F_t	8.84
Sample	asymmetry	$\lvert A\rvert$	$1.037\cdot10^{-3}$
	excess	$\lvert E\rvert$	2.999
Condition for theoretical variances	asymmetry	$3\sqrt{\sigma(A)}$	0.644
	excess	$5\sqrt{\sigma(E)}$	2.064
Variance of parameter relatively to mean		σ_a^2	0.577
Residual variance		$\sigma_з^2$	0.4358
Fisher criterion	calculation	F_a	1.324
	table	F_{at}	1.24

As it is seen from Table 2, the process on the selected period of time is quite reproducible and stationary, and empirical distribution almost obeys the normal law.

The results of calculations by equations (24)–(30) are brought to Table 3, in which the mode numbers correspond to numbers in Table 1.

Table 3

Indicators of efficiency of heat exchanger process of ARU evaporator by experimental data

Indicator	Mode number						
	1	2	3	4	5	6	7
Cold productivity Φ_O, MW	4.59	5.53	5.01	5.24	3.38	3.23	5.22
Average consumption of ammonia condensate M_{CS}, t/h	19.11	16.78	18.9	18.04	16.18	17.78	13.21
Thermal efficiency coefficient α_{IP}, W/(m^2·K)	1310.3	1581.6	1360.5	1453.2	1069.3	1085.3	1448.8
Thermal efficiency coefficient α_P, W(m^2·K)	3917.3	3889.6	3932.1	3779.7	3783.9	3915.8	3929.7
Total thermal resistance $R_T^E\cdot10^4$, (m^2·K)/W	8.2631	6.2330	6.4841	6.4540	5.1315	6.9836	5.3671
Heat transfer coefficient K_E, W/(m^2·K)	541.6	660.4	610.1	625.7	584.2	533.2	673.8

As Table 3 shows, heat transfer coefficient under actual conditions K_E is on average by nearly 1.8 times lower than coefficient K_P=1130,4 W/(m^2·K) calculated according from the equations (28–30), accepted at design and total thermal resistance R_T^P at the level of 0.000356 (m^2·K)/W. Such a mismatch, according to existing research [3], can be caused by the presence of additional condensation thermal resistance.

6. Discussion of results of research into numerical estimation of uncertainties of heat transfer coefficient and thermal load

Obtained calculation indicators in Table 3 indicate that there is a non-random dependence between general thermal resistance coefficient R_T^E and average consumption of ammoniac condensate M_{CS}. Based on results of processing of these indicators by the method of least squares, the following equation was obtained:

$$R_T^E=\left(0{,}0956\cdot M_{CS}^2-2{,}5111\cdot M_{CS}+21{,}081\right)\cdot10^{-4}. \qquad (31)$$

According to equation (31), root-mean-square deviation of calculation values relative to experimental value is $1.5 \cdot 10^{-4}$ (m^2·K)/W, and approximation error does not exceed 14 %.

Based on the results of processing of experimental data on ammonia concentration $a_{NH_3}^{IN}$ in CG (Table 1) using the software package Statistica, the equation, which takes the following form, was acquired

$$a_{NH_3}^{IN} = 22{,}068 - 0{,}6272 \cdot P_{PC} + 0{,}05245 \cdot \Theta_{PC}. \quad (32)$$

Results of the equation (32) verification for adequacy by the Fisher criterion are brought to Table 2 and indicate that it describes the process adequately enough, and approximation error is up to 6 %.

This approach to numerical evaluation of uncertainties R_T^E and $a_{NH_3}^{IN}$ makes it possible using the above method (algorithm) to make periodic adjustments to total thermal resistance and thermal load at the evaporator inlet taking into consideration changes in ammonia concentration in CG. Under such conditions, it is possible to identify the heat exchange process on the whole.

The final verification of possibility of application of the proposed identification algorithm was carried out by solving the equations of the mathematical model, in which a description of uncertainties is determined by a number of assumptions. They include the following: ammonia vapor saturation in the whole volume of the inter-pipe space, heat of hydraulic losses is negligible, uniform distribution of ammonia concentration in the volume of boiling liquid, the absence of formation of non-boiling area in the volume of inter-pipe space of the evaporator, average logarithmic CG temperature distribution. At such uncertainties, mathematical description of the evaporator is formed by the known equations of heat exchange and of material and energy balance. The basic equations take the following form:

$$\Phi_O = M_F \cdot i_F + M_Y^{OUT} \cdot i_Y^{OUT} - M_X^{IN} \cdot i_X^{IN}, \quad (33)$$

$$M_X^{IN} \cdot \xi_X^{IN} = M_F \cdot \xi_F + M_Y^{OUT} \cdot \xi_Y^{OUT}, \quad (34)$$

$$M_X^{IN} = M_F + M_Y^{OUT}, \quad (35)$$

$$\Phi_{IP} = \alpha_{IP} \cdot F_{IP} \cdot \left(\Theta_{IP}^W - \Theta_{IP}\right), \quad (36)$$

$$\Phi_P = \alpha_P \cdot F_P \cdot \left(\Theta_{CG}^A - \Theta_P^W\right), \quad (37)$$

$$\Phi_W = F_W^A \cdot \left(\Theta_P^W - \Theta_{IP}^W\right) / R_T^E, \quad (38)$$

$$\Theta_{CG}^A - \Theta_{IP} = \frac{\left(\Theta_{1CG} - \Theta_{IP}\right) - \left(\Theta_{2CG} - \Theta_{IP}\right)}{\ln\left[\left(\Theta_{1CG} - \Theta_{IP}\right) / \left(\Theta_{2CG} - \Theta_{IP}\right)\right]}, \quad (39)$$

where M_F, M_Y^{OUT}, M_X^{IN} are the mass consumptions of phlegm, ammonia vapor at the outlet and liquid refrigerant at the inlet respectively, kg/s; i_F, i_Y^{OUT}, i_X^{IN} are the enthalpies of phlegm, ammonia vapor at the outlet and liquid refrigerant at the inlet respectively, kJ/kg; ξ_F, ξ_Y^{OUT}, ξ_X^{IN} are the weight concentrations of phlegm, ammonia vapor at the outlet and liquid refrigerant at the inlet respectively, kg/kg; Φ_W, Φ_{IP}, Φ_P are the thermal flows through the wall of the pipes, from the inter-pipe and pipe space respectively, W; F_W^A, F_{IP}, F_P are the average surfaces of the wall, inter-pipe and pipe space respectively, m^2; Θ_{CG}^A, Θ_P^W, Θ_{IP}, Θ_{IP}^W are the average temperature of CG and of the wall from the side of the pipe space, boiling refrigerant and of the wall from the side of the inter-pipe space respectively, °C.

Presented equations (24)–(39) along with the formulas for calculation of thermo- physical properties of substances and equilibrium relationships constitute the entire mathematical model of the evaporator. The possibility of application of this model to solution of the problem of parametric identification at the above uncertainties was carried out by verification of the model for adequacy to the actual heat exchange process. Table 4 presents separate results of calculation of objective performance indicators of the evaporator in accordance with the developed identification algorithm. According to the conducted studies, it is possible to distinguish five basic stages in this algorithm:

– sampling formation by evaluation of the quality of obtained information;

– calculation of values of magnitudes Φ_O, M_C, M_{CS}, α_{IP}, α_P, $\Delta\Theta_{MLD}$, K_E, R_T^E based on the obtained experimental data;

– determining of functional dependence $R_T^E = f\left(M_{CS}\right)$ and numerical estimation of concentration $a_{NH_3}^{IN}$ from equation (32);

– calculation of objective performance indicators of the evaporator (heat transfer coefficient, CG temperature at the outlet, boiling temperature of the refrigerant, cold productivity);

– calculation of computation error by the model compared with the experimental data.

Table 4

Calculation indicators of operation modes of ARU evaporator

Indicator	Mode numbers*						
	1	2	3	4	5	6	7
Ammonia concentration at the inlet $a_{NH_3}^{IN}$, % by vol.	9.67	10.15	9.66	9.84	9.14	9.54	8.1
Cold productivity Φ_O, MW	4.64	5.56	5.04	5.28	3.31	3.26	5.02
Heat transfer coefficient K, W/(m^2·K)	576.05	629.04	579.74	603.54	541.19	544.47	681.67
Boiling temperature of refrigerant Θ_{IP}, °C	–14.35	–10.09	–16.51	–14.08	–8.06	–2.87	–16.67
CG temperature at the outlet Θ_{2CG}, °C	–4.8	–1.32	–7.57	–5.89	–2.39	4.03	–4.8
Total thermal resistance $R_T^E \cdot 10^4$, (m^2·K)/W	7.125	6.812	7.412	6.941	5.831	6.058	4.746

*Note: * – mode numbers correspond to numbers in Tables 1, 3*

The software using the presented identification algorithm and creation of the mathematical model was imple-

mented in MATLAB package, in which the initial approximation problem at stage 4 was determined on condition that $\Theta_{2CG} \le \Theta_{1CG} - 4$. The magnitude of calculation error was evaluated by convergence of thermal balance and accepted at the level of 0.2 %. The value of approximation step $\Delta\Theta_{2CG}$ with sufficient accuracy for practical calculations was selected at the level of 0.11 °C. Comparison of experimental data, shown in Tables 1, 3 and the data, obtained from the mathematical model in Table 4 shows that calculation error does not exceed approximation error R_T^E by equation (31). In this case, the root- mean-square deviation of calculation values Θ_{2CG} relative to the experimental ones does not exceed 0.17 °C This convergence allows us to draw a conclusion about the possibility of application of the model for construction of the adaptive system of optimal control for the purpose of minimizing the temperature mode.

Information and control complex TDS-3000, existing at ammonia synthesis aggregates of AM-1360 series, operating in Ukraine, covers both the field and the technological production control level. It includes tools for collection, processing and storage of technological information and tools of the human-machine interface. Information exchange is performed using communication devices. However, it should be noted that TDC-3000 is a control complex of the "closed" type with installed software. That is why it cannot be significantly modernized. Solution of the set problem of construction of the mathematical model in real time scale and adaptation of the models to a situation with uncertainty is only possible through the supplementing of the existing control system with available hardware-software tools of the "open" type.

Fig. 3 shows the variant of combining TDC-3000 with the proposed automated system for identification and creation of the mathematical model of the ARU evaporator. This approach makes it possible to use TDC-3000 as a source of operational technological information for filling the data and knowledge base. It becomes possible by using OPC (Open Platform Communications) technology, which enables us to get all required information by using the client-server data access method [13]. The function of clients in the system is performed by the SCADA system and software environment Matlab. In this approach, the SCADA system provides for the function of the human-machine interface, and all the necessary calculations are performed in software environment Matlab [14]. As a result, control algorithms will be supplemented with new data regarding the mathematical model, which will make it possible to provide for solution of the problem of minimizing the temperature mode of the ARU evaporator of the secondary condensation unit.

Further studies can be directed to development of the algorithm for minimizing the temperature mode of CG cooling with determining of the optimal vector of status $\mathbf{x}^{opt}(t)$ and control influence $\mathbf{Y}^{opt}(t)$. Considering this, the structure, shown in Fig. 3, must be supplemented by feedback for implementation of the control function after calculations by the mathematical model through reconfiguring regulators based free programming controllers.

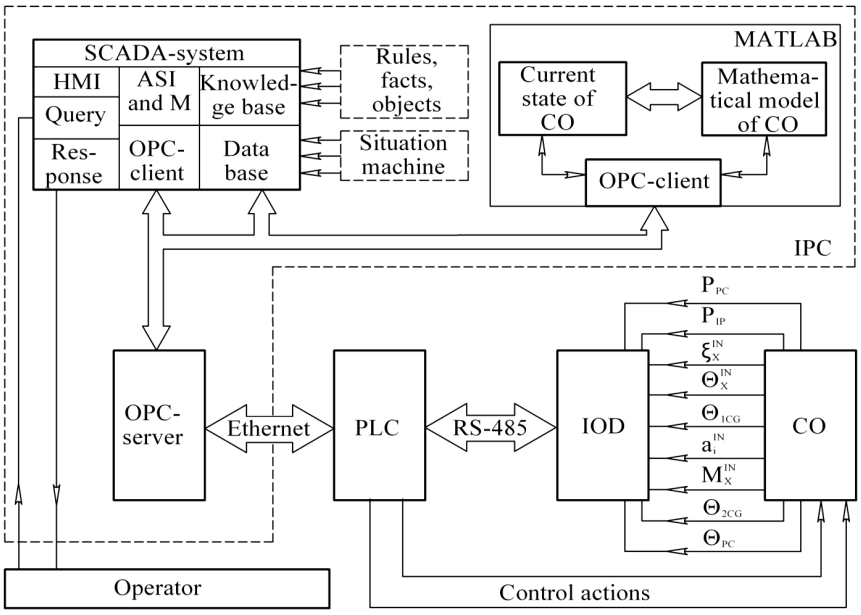

Fig. 3. Generalized structure of automated system for identification and creation of mathematical model of ARU evaporator: HMI – human-machine interface; ASI and M – automated system of identification and modeling; CO – control object (evaporator and primary condensation unit); PLC – programmable logic controller; IOD – input/output device; IPC – industrial personal computer

7. Conclusions

1. Based on the results of experimental research, indicators of effectiveness of heat exchange process of the evaporator, such as heat flows, coefficients of thermal efficiency and heat transfer were determined. It was established that actual heat transfer coefficient is by almost 1.8 times lower than it was designed by the project. This is due to underestimation of the process of ammonia condensation from CG, which creates additional condensing thermal resistance.

2. The identification of heat exchange process of the evaporator was performed, by the results of which the equations for calculation of numerical estimation of uncertainty of heat transfer coefficient and total thermal resistance were established. It was shown that these equations unlike generally accepted ones, take into account condensation thermal resistance in the heat exchange process. The equation of material and energy balances takes into consideration a change in concentrations of refrigerant at the inlet and of boiling liquid in the inter-pipe space. It creates conditions for determining of the optimal consumption of phlegm of the evaporator for minimizing the temperature mode of CG cooling in the evaporator.

3. Using the method of statistical modeling based on the data of passive experiment, the equation for determining of ammonia concentration in CG at the evaporator inlet was established. This uncertainty is of probabilistic nature, which is caused by seasonal and daily fluctuations in air temperature and humidity. Possibility of application of this

equation for identification of heat exchange process at existing relationship of this concentration and condensation thermal resistance was proved.

4. Algorithmic support for solving identification problems and operative obtaining of the mathematical model of the evaporator was developed. The use of this algorithm allows us to determine current parameters of an object taking into consideration uncertainties and to construct an adequate model of the evaporator in real time scale. It creates conditions for formation of control actions on the part of the control system in regard to an object. The technical structure of the automated system, which is adapted to the existing information system of the industrial unit of ammonia synthesis, was determined.

References

1. Heidlage M., Pfromm P. Novel Thermochemical Synthesis of Ammonia and Syngas from Natural Gas // Proceeding: 2015 AIChE Annual Meeting. Salt Lake City, 2015. URL: https://www.aiche.org/conferences/aiche-annual-meeting/2015/proceeding/paper/517b-novel-thermochemical-synthesis-ammonia-and-syngas-natural-gas
2. Malhotra A. KBR PURIFIER™ Technology and Project Execution Options for Ammonia Plants // 25th AFA International Fertilizer Technology Conference & Exhibition Sustainability Driving the Future. KBR, USA, 2012. URL: http://s3.amazonaws.com/zanran_storage/afa.com.eg/ContentPages/2565221218.pdf
3. Babichenko A. K., Toshynskyi V. I. Zastosuvannia matematychnoho modeliuvannia dlia diahnostyky pokaznykiv efektyvnosti protsesiv teplo-i masoobminu v absorberakh teplovykorystovuiuchykh kholodylnykh ustanovok ahrehativ syntezu amiaku // Voprosy himii i himicheskoy tekhnologii. 2009. Issue 6. P. 107–111.
4. System analysis of the secondary condensation unit in the context of improving energy efficiency of ammonia production / Babichenko A., Velma V., Babichenko J., Kravchenko Y., Krasnikov I. // Eastern-European Journal of Enterprise Technologies. 2017. Vol. 2, Issue 6 (86). P. 18–26. doi: 10.15587/1729-4061.2017.96464
5. Zhang Y., Fidan B., Ioannou P. A. Backstepping control of linear time-varying systems with known and unknown parameters // IEEE Transactions on Automatic Control. 2003. Vol. 48, Issue 11. P. 1908–1925. doi: 10.1109/tac.2003.819074
6. Lutska N. M., Ladaniuk A. P. Optymalni ta robastni systemy keruvannia tekhnolohichnymy obiektamy. Kyiv: Lira-K, 2016. 288 p.
7. Galimova L. B., Kayl' V. Ya., Vedeneeva A. I. Otsenka stepeni termodinamicheskogo sovershenstva na osnove analiza raboty deystvuyushchey absorbtsionnoy holodil'noy ustanovki sistemy sinteza ammiaka // Vestnik mezhdunarodnoy akademiyi holoda. 2015. Issue 4. P. 55–60.
8. C.O.P Derivation and thermodynamic calculation of ammonia-water vapor absorption refrigeration system / Shukla A., Mishra A., Shukla D., Chauhan K. // International journal of mechanical engineering and technology. 2015. Vol. 6, Issue 5. P. 72–81.
9. Demirplak M. Uniqueness of equilibrium in the Haber synthesis of ammonia // Journal of Mathematical Chemistry. 2013. Vol. 52, Issue 3. P. 899–916. doi: 10.1007/s10910-013-0300-2
10. The use of statistical software in food science and technology: Advantages, limitations and misuses / Nunes C. A., Alvarenga V. O., de Souza Sant'Ana A., Santos J. S., Granato D. // Food Research International. 2015. Vol. 75. P. 270–280. doi: 10.1016/j.foodres.2015.06.011
11. Orazbayev B. B., Orazbayeva K. N., Utenova B. E. Development of mathematical models and modeling of chemical engineering systems under uncertainty // Theoretical Foundations of Chemical Engineering. 2014. Vol. 48, Issue 2. P. 138–147. doi: 10.1134/s0040579514020092
12. Brandt S. Data Analysis: Statistical and Computational Methods for Scientists and Engineers. New York: Springer, 2014. 523 p. doi: 10.1007/978-3-319-03762-2
13. Sharma K. L. S. Overview of industrial process automation. Amsterdam: Elsevier, 2016. 492 p.
14. Designing intelligent manufacturing systems through Human-Machine Cooperation principles: A human-centered approach / Pacaux-Lemoine M.-P., Trentesaux D., Zambrano Rey G., Millot P. // Computers & Industrial Engineering. 2017. Vol. 111. P. 581–595. doi: 10.1016/j.cie.2017.05.014