Commun. Math. Phys.
Digital Object Identifier (DOI) 10.1007/s00220-011-1318-6

Communications in
Mathematical Physics

Collisions of Particles in Locally AdS Spacetimes I. Local Description and Global Examples

Thierry Barbot[1,⋆], **Francesco Bonsante**[2,⋆], **Jean-Marc Schlenker**[3,⋆⋆]

[1] Laboratoire D'analyse Non Linéaire et Géométrie, Université d'Avignon et Des Pays de Vaucluse, 33, Rue Louis Pasteur, 84 018 Avignon, France. E-mail: thierry.barbot@univ-avignon.fr
[2] Dipartimento di Matematica dell'Università Degli Studi di Pavia, Via Ferrata 1, 27100 Pavia, Italy. E-mail: francesco.bonsante@unipv.it
[3] Institut de Mathématiques de Toulouse, UMR CNRS 5219, Université Paul Sabatier, 31062 Toulouse Cedex 9, France. E-mail: schlenker@math.univ-toulouse.fr

Received: 17 October 2010 / Accepted: 26 April 2011

Abstract: We investigate 3-dimensional globally hyperbolic AdS manifolds (or more generally constant curvature Lorentz manifolds) containing "particles", i.e., cone singularities along a graph Γ. We impose physically relevant conditions on the cone singularities, e.g. positivity of mass (angle less than 2π on time-like singular segments). We construct examples of such manifolds, describe the cone singularities that can arise and the way they can interact (the local geometry near the vertices of Γ). We then adapt to this setting some notions like global hyperbolicity which are natural for Lorentz manifolds, and construct some examples of globally hyperbolic AdS manifolds with interacting particles.

Contents

⋆ T. B. and F. B. were partially supported by CNRS, ANR GEODYCOS.
⋆⋆ J.-M. S. was partially supported by the A.N.R. programs RepSurf, ANR-06-BLAN-0311, GeomEinstein, 06-BLAN-0154, and ETTT, ANR-09-BLAN-0116-01, 2009-2013.

1. Introduction

1.1. Three-dimensional cone-manifolds. The 3-dimensional hyperbolic space can be defined as a quadric in the 4-dimensional Minkowski space:

$$\mathbb{H}^3 = \{x \in \mathbb{R}^{3,1} \mid \langle x, x\rangle = -1 \ \& \ x_0 > 0\} .$$

Hyperbolic manifolds, which are manifolds with a Riemannian metric locally isometric to the metric on $\mathbb{H}^3$, have been a major focus of attention for modern geometry.

More recently attention has turned to hyperbolic cone-manifolds, which are the types of singular hyperbolic manifolds that one can obtain by gluing isometrically the faces of hyperbolic polyhedra. Three-dimensional hyperbolic cone-manifolds are singular along lines, and at "vertices" where three or more singular segments intersect. The local geometry at a singular vertex is determined by its *link*, which is a spherical surface with cone singularities. Among key recent results on hyperbolic cone-manifolds are rigidity results [HK98, MM, Wei] as well as many applications to three-dimensional geometry (see e.g. [Bro04, BBES03]).

2 2 0 1 3 1 8 B
Jour. No Ms. No.
Dispatch: 3/9/2011
Total pages: 54
Disk Received ☑
Disk Used ☑
Journal: Commun. Math. Phys.
Not Used ☐
Corrupted ☐
Mismatch ☐

1.2. AdS manifolds. The three-dimensional anti-de Sitter (AdS) space can be defined, similarly as H^3, as a quadric in the 4-dimensional flat space of signature (2, 2):

$$\mathrm{AdS}_3 = \{x \in \mathbb{R}^{2,2} \mid \langle x, x\rangle = -1\} .$$

It is a complete Lorentz space of constant curvature -1, with fundamental group $\mathbb{Z}$.

AdS geometry provides in certain ways a Lorentz analog of hyperbolic geometry, a fact mostly discovered by Mess (see [Mes07, ABB+07]). In particular, the so-called *globally hyperbolic* AdS 3-manifolds are in key ways analogs of quasifuchsian hyperbolic 3-manifolds. Among the striking similarities one can note an analog of the Bers double uniformization theorem for globally hyperbolic AdS manifolds, or a similar description of the convex core and of its boundary. Three-dimensional AdS geometry, like 3-dimensional hyperbolic geometry, has some deep relationships with Teichmüller theory (see e.g. [Mes07, ABB+07, BS09a, BKS06, KS07, BS09b, BS10]).

Lorentz manifolds have often been studied for reasons related to physics and in particular gravitation. In three dimensions, Einstein metrics are the same as constant curvature metrics, so the constant curvature 3-dimensional Lorentz manifolds – and in particular AdS manifolds – are the 3-dimensional models of gravity. From this point of view, cone singularities have been extensively used to model point particles, see e.g. [tH96, tH93].

The goal pursued here is to start a geometric study of 3-dimensional AdS manifolds with cone singularities. We will in particular

- describe the possible "particles", or cone singularities along a singular line,
- describe the singular vertices – the way those "particles" can "interact",
- show that classical notions like global hyperbolicity can be extended to AdS cone-manifolds,
- give examples of globally hyperbolic AdS particles with "interesting" particles and particle interactions.

We focus here on the presentation of AdS manifolds for simplicity, but most of the local study near singular points extends to constant curvature-Lorentz 3-dimensional manifolds. More specifically, the first three points above extend from AdS manifolds with particles to Minkowski or de Sitter manifolds. The fourth point is mostly limited to the AdS case, although some parts of what we do here can be extended to the Minkowski or de Sitter case.

We outline in more details those main contributions below.

1.3. A classification of cone singularities along lines. We start in Sect. 3 an analysis of the possible local geometry near a singular point. For the hyperbolic cone-manifold this local geometry is described by the *link* of the point, which is a spherical surface with cone singularities. In the AdS (as well as the Minkowski or de Sitter) setting there is an analog notion of link, which is now what we call a singular *HS-surface*, that is, a surface with a geometric structure locally modelled on the space of rays starting from a point in $\mathbb{R}^{2,1}$ (see Sect. 3.4).

We then describe the possible geometry in the neighborhood of a point on a singular segment (Proposition 3.1). For hyperbolic cone-manifolds, this local description is quite simple: there is only one possible local model, depending on only one parameter, the angle. For AdS cone-manifolds – or more generally cone manifolds with a constant curvature Lorentz metric – the situation is more complicated, and cone singularities along segments can be of different types. For instance it is clear that the fact that the singular segment is space-like, time-like or light-like should play a role.

2 2 0 1 3 1 8 B
Jour. No Ms. No.
Dispatch: 3/9/2011
Total pages: 54
Disk Received ☑
Disk Used ☑
Journal: Commun. Math. Phys.
Not Used ☐
Corrupted ☐
Mismatch ☐

There are two physically natural restrictions which appear in this section. The first is the *degree* of a cone singularity along a segment c: the number of connected components of time-like vectors in the normal bundle of c (Sect. 3.3). In the "usual" situation where each point has a past and a future, this degree is equal to 2. We restrict our study to the case where the degree is at most equal to 2. There are many interesting situations where this degree can be strictly less than 2, see below.

The second condition (see Sect. 3.6) is that each point should have a neighborhood containing no closed causal curve – also physically relevant since closed causal curves induce causality violations. AdS manifolds with cone singularities satisfying those two conditions are called *causal* here. We classify and describe all cone singularities along segments in causal AdS manifolds with cone singularities, and provide a short description of each kind. They are called here: massive particles, tachyons, Misner singularities, BTZ-like singularities, and light-like and extreme BTZ-like singularities.

We also define a notion of *positivity* for those cone singularities along lines. Heuristically, positivity means that those geodesics tend to "converge" along those cone singularitites; for instance, for a "massive particle" – a cone singularity along a time-like singularity – positivity means that the angle should be less than 2π, and it corresponds physically to the positivity of mass.

Remark 1.1. All this analysis is local, even infinitesimal. It applies in a much wider setting than the one we restricted ourselves to here, and leads to a general description of all possible singularities in a 3-dimensional Lorentzian spacetime. Our first concern here is the case of singular AdS-spacetimes, hence we will not develop here further the other cases.

1.4. Interactions and convex polyhedra. In Sect. 4 we turn our attention to the vertices of the singular locus of AdS manifolds with cone singularities, in other terms the "interaction points" where several "particles" – cone singularities along lines – meet and "interact". The construction of the link as an *HS*-surface, in Sect. 3, means that we need to understand the geometry of singular *HS*-surfaces. The singular lines arriving at an interaction point p correspond to the singular points of the link of p. An important point is that the positivity of the singular lines arriving at p, and the absence of closed causal curves near p, can be read directly on the link; this leads to a natural notion of *causal* singular *HS*-surface, those causal singular *HS*-surfaces are precisely those occurring as links of interaction points in causal singular AdS manifolds.

The first point of Sect. 4 is the construction of many examples of positive causal singular *HS*-surfaces from convex polyhedra in HS^3, the natural analog of HS^2 in one dimension higher. Given a convex polyhedron in HS^3 one can consider the induced geometric structure on its boundary, and it is often an *HS*-structure and without closed causal curve. Moreover the positivity condition is always satisfied. This makes it easy to visualize many examples of causal *HS*-structures, and should therefore help in following the arguments used in Sect. 5 to classify causal *HS*-surfaces.

However the relation between causal *HS*-surfaces and convex polyhedra is perhaps deeper than just a convenient way to construct examples. This is indicated in Theorem 4.3, which shows that all *HS*-surfaces having some topological properties (those which are "causally regular") are actually obtained as induced on a unique convex polyhedron in HS^3.

1.5. A classification of HS-structures. Section 5 contains a classification of causal *HS*-structures, or, in other terms, of interaction points in causal singular AdS manifolds

2 2 0 1 3 1 8 B
Jour. No Ms. No.
Dispatch: 3/9/2011
Total pages: 54
Disk Received ☑
Disk Used ☑
Journal: Commun. Math. Phys.
Not Used ☐
Corrupted ☐
Mismatch ☐

(or, more generally, in any singular spacetime). The main result is Theorem 5.6, which describes what types of interactions can, or cannot, occur. The striking point is that there are geometric restrictions on what kind of singularities along segments can interact at one point.

1.6. Global hyperbolicity. In Sect. 6 we consider singular AdS manifolds globally. We first extend to this setting the notion of global hyperbolicity which plays an important role in Lorentz geometry.

A key result for non-singular AdS manifolds is the existence, for any globally hyperbolic manifold M, of a unique maximal globally hyperbolic extension. We prove a similar result in the singular context (see Proposition 6.22 and Proposition 6.24). However this maximal extension is unique only under the condition that the extension does not contain more interactions than M.

Once more, this analysis could have been performed in a wider context. It applies in particular in the case of singular spacetimes locally modeled on the Minkowski spacetime, or the de Sitter spacetime.

1.7. Construction of global examples. Finally Sect. 7 is intended to convince the reader that the general considerations on globally hyperbolic AdS manifolds with interacting particles are not empty: it contains several examples, constructed using basically two methods.

The first relies again on 3-dimensional polyhedra, but not used in the same way as in Sect. 4: here we glue their faces isometrically so as to obtain cone singularities along the edges, and interactions points at the vertices. The second method is based on surgery: we show that, in many situations, it is possible to excise a tube in an AdS manifold with non-interacting particles (like those arising in [BS09a]) and replace it by a more interesting tube containing an interaction point.

1.8. Further extension. We wish to continue in [BBS10] the investigation of globally hyperbolic AdS metrics with interacting particles, and to prove that the moduli space of those metrics is locally parameterized by 2-dimensional data (a sequence of pairs of hyperbolic metrics with cone singularities on a surface).

2. Preliminaries

2.1. (G, X)-structures. Let G be a Lie group, and X an analytic space on which G acts analytically and faithfully. In this paper, we are essentially concerned with the case where $X = \mathrm{AdS}_3$ and G its isometry group, but we will also consider other pairs (G, X).

A (G, X)-*structure* on a manifold M is a covering of M by open sets with homeomorphisms into X, such that the transition maps on the overlap of any two sets are (locally) in G. A (G, X)-*manifold* is a manifold equipped with a (G, X)-structure. Observe that if $\tilde{X}$ denotes the universal covering of X, and $\tilde{G}$ the universal covering of G, any (G, X)-structure defines a unique $(\tilde{G}, \tilde{X})$-structure, and, conversely, any $(\tilde{G}, \tilde{X})$-structure defines a unique (G, X)-structure. An isomorphism between two (G, X)-manifolds is a homeomorphism whose local expressions in charts of the (G, X)-structures are restrictions of elements of G.

2 2 0 1 3 1 8 B
Jour. No Ms. No.
Dispatch: 3/9/2011
Total pages: 54
Disk Received ☑
Disk Used ☑
Journal: Commun. Math. Phys.
Not Used ☐
Corrupted ☐
Mismatch ☐

A (G, X)-manifold is characterized by its *developing map* $\mathcal{D} : \widetilde{M} \to X$ (where $\widetilde{M}$ denotes the universal covering of M) and the holonomy representation $\rho : \pi_1(M) \to G$. Moreover, the developing map is a local homeomorphism, and it is $\pi_1(M)$-equivariant (where the action of $\pi_1(M)$ on $\widetilde{M}$ is the action by deck transformations).

For more details, we refer to the recent expository paper [Gol10], or to the book [Car03] oriented towards a physics audience.

2.2. Background on the AdS space. Let $\mathbb{R}^{2,2}$ denote the vector space $\mathbb{R}^4$ equipped with a quadratic form $q_{2,2}$ of signature $(2, 2)$. The Anti-de Sitter AdS_3 space is defined as the -1 level set of $q_{2,2}$ in $\mathbb{R}^{2,2}$, endowed with the Lorentz metric induced by $q_{2,2}$.

On the Lie algebra $\mathfrak{gl}(2, \mathbb{R})$ of 2×2 matrices with real coefficients, the determinant defines a quadratic form of signature $(2, 2)$. Hence we can consider the anti-de Sitter space AdS_3 as the group $\mathrm{SL}(2, \mathbb{R})$ equipped with its Killing metric, which is bi-invariant. There is therefore an isometric action of $\mathrm{SL}(2, \mathbb{R}) \times \mathrm{SL}(2, \mathbb{R})$ on AdS_3, where the two factors act by left and right multiplication, respectively. It is well known (see [Mes07]) that this yields an isomorphism between the identity component $\mathrm{Isom}_0(\mathrm{AdS}_3)$ of the isometry group of AdS_3 and $\mathrm{SL}(2, \mathbb{R}) \times \mathrm{SL}(2, \mathbb{R})/\pm(I, I)$. It follows directly that the identity component of the isometry group of $\mathrm{AdS}_{3,+}$ (the quotient of AdS_3 by the antipodal map) is $\mathrm{PSL}(2, \mathbb{R}) \times \mathrm{PSL}(2, \mathbb{R})$. In all of this paper, we denote by $\mathrm{Isom}_{0,+}$ the identity component of the isometry group of $\mathrm{AdS}_{3,+}$, so that $\mathrm{Isom}_{0,+}$ is isomorphic to $\mathrm{PSL}(2, \mathbb{R}) \times \mathrm{PSL}(2, \mathbb{R})$.

Another way to identify the identity component of the isometry group of AdS_3 is by considering the projective model of $\mathrm{AdS}_{3,+}$, as the interior (one connected component of the complement) of a quadric $Q \subset \mathbb{R}P^3$. This quadric is ruled by two families of lines, which we call the "left" and "right" families and denote by $\mathcal{L}_l$, $\mathcal{L}_r$. Those two families of lines have a natural projective structure (given for instance by the intersection of the lines of $\mathcal{L}_l$ with a fixed line of $\mathcal{L}_r$). Given an isometry $u \in \mathrm{Isom}_{0,+}$, it acts projectively on both $\mathcal{L}_l$ and $\mathcal{L}_r$, defining two elements ρ_l, ρ_r of $\mathrm{PSL}(2, \mathbb{R})$. This provides an identification of $\mathrm{Isom}_{0,+}$ with $\mathrm{PSL}(2, \mathbb{R}) \times \mathrm{PSL}(2, \mathbb{R})$.

The projective space $\mathbb{R}P^3$ referred to above is of course the projectivization of $\mathbb{R}^{2,2}$, and the elements of the quadric Q are the projections of $q_{2,2}$-isotropic vectors. The geodesics of $\mathrm{AdS}_{3,+}$ are the intersections between projective lines of $\mathbb{R}P^3$ and the interior of Q. Such a projective line is the projection of a 2-plane P in $\mathbb{R}^{2,2}$. If the signature of the restriction of $q_{2,2}$ to P is $(1, 1)$, then the geodesic is said to be *space-like*, if it is $(0, 2)$ the geodesic is *time-like*, and if the restriction of $q_{2,2}$ to P is degenerate then the geodesic is *light-like*.

Similarly, totally geodesic planes are projections of 3-planes in $\mathbb{R}^{2,2}$. They can be space-like, light-like or time-like. Observe that space-like planes in $\mathrm{AdS}_{3,+}$, with the induced metric, are isometric to the hyperbolic disk. Actually, their images in the projective model of $\mathrm{AdS}_{3,+}$ are Klein models of the hyperbolic disk. Time-like planes in $\mathrm{AdS}_{3,+}$ are isometric to the anti-de Sitter space of dimension two.

Consider an affine chart of $\mathbb{R}P^3$, complement of the projection of a space-like hyperplane of $\mathbb{R}^{2,2}$. The quadric in such an affine chart is a one-sheeted hyperboloid. The interior of this hyperboloid is an *affine chart* of AdS_3. The intersection of a geodesic of $\mathrm{AdS}_{3,+}$ with an affine chart is a component of the intersection of the affine chart with an affine line ℓ. The geodesic is space-like if ℓ intersects[1] twice the hyperboloid, light-like if ℓ is tangent to the hyperboloid, and time-like if ℓ avoids the hyperboloid.

[1] Of course, such an intersection may happen at the projective plane at infinity.

For any p in $\mathrm{AdS}_{3,+}$, the $q_{2,2}$-orthogonal $p^{\perp}$ is a space-like hyperplane. Its complement is therefore an affine chart, that we denote by $\mathcal{A}(p)$. It is the *affine chart centered at* p. Observe that $\mathcal{A}(p)$ contains p, any non-time-like geodesic containing p is contained in $\mathcal{A}(p)$.

Unfortunately, affine charts always miss some region of $\mathrm{AdS}_{3,+}$, and we will consider regions of $\mathrm{AdS}_{3,+}$ which do not fit entirely in such an affine chart. In this situation, one can consider the conformal model: there is a conformal map from AdS_3 to $\mathbb{D}^2 \times \mathbb{S}^1$, equipped with the metric $ds_0^2 - dt^2$, where ds_0^2 is the spherical metric on the disk $\mathbb{D}^2$, *i.e.* where $(\mathbb{D}^2, ds_0^2)$ is a hemisphere (see [HE73, pp. 131–133]).

One needs also to consider the universal covering $\widetilde{\mathrm{AdS}}_3$. It is conformally isometric to $\mathbb{D}^2 \times \mathbb{R}$ equipped with the metric $ds_0^2 - dt^2$. But it is also advisable to consider it as the union of an infinite sequence $(\overline{\mathcal{A}}_n)_{(n\in\mathbb{Z})}$ of closures of affine charts. This sequence is totally ordered, the interior $\mathcal{A}_n$ of every term lying in the future of the previous one and in the past of the next one. The interiors $\mathcal{A}_n$ are separated one from the other by a space-like plane, *i.e.* a totally geodesic plane isometric to the hyperbolic disk. Observe that each space-like or light-like geodesic of $\widetilde{\mathrm{AdS}}_3$ is contained in such an affine chart; whereas each time-like geodesic intersects every copy $\mathcal{A}_n$ of the affine chart.

If two time-like geodesics meet at some point p, then they meet infinitely many times. More precisely, there is a point q in $\widetilde{\mathrm{AdS}}_3$ such that if a time-like geodesic contains p, then it contains q also. Such a point is said to be *conjugate to* p. The existence of conjugate points corresponds to the fact that for any p in $\mathrm{AdS}_3 \subset \mathbb{R}^{2,2}$, every 2-plane containing p contains also $-p$. If we consider $\widetilde{\mathrm{AdS}}_3$ as the union of infinitely many copies $\overline{\mathcal{A}}_n$ $(n \in \mathbb{Z})$ of the closure of the affine chart $\mathcal{A}(p)$ centered at p, with $\mathcal{A}_0 = \mathcal{A}(p)$, then the points conjugate to p are precisely the centers of the $\mathcal{A}_n$, all representing the same element in the interior of the hyperboloid.

The center of $\mathcal{A}_1$ is *the first conjugate point* p^+ *of* p *in the future.* It has the property that any other point in the future of p and conjugate to p lies in the future of p^+. Inverting the time, one defines similarly the *first conjugate point* p^- *of* p *in the past* as the center of $\mathcal{A}_{-1}$.

Finally, the future in $\mathcal{A}_0$ of p is the interior of a convex cone based at p (more precisely, the interior of the convex hull in $\mathbb{R}P^3$ of the union of p with the space-like 2-plane between $\mathcal{A}_0$ and $\mathcal{A}_1$). The future of p in $\widetilde{\mathrm{AdS}}_3$ is the union of this cone with all the $\overline{\mathcal{A}}_n$ with $n > 0$.

In particular, one can give the following description of the domain $E(p)$, intersection between the future of p^- and the past of p^+: it is the union of $\overline{\mathcal{A}}_0$, the past of p^+ in $\mathcal{A}_1$ and the future of p^- in $\mathcal{A}_{-1}$.

We will need a similar description of 2-planes in $\widetilde{\mathrm{AdS}}_3$ (*i.e.* of totally geodesic hypersurfaces) containing a given space-like geodesic. Let c be such a space-like geodesic, consider an affine chart $\mathcal{A}_0$ centered at a point in c (therefore, c is the segment joining two points in the hyperboloid). The set composed of the first conjugate points in the future of points in c is a space-like geodesic c_+, contained in the chart $\mathcal{A}_1$. Every time-like 2-plane containing c contains also c_+, and *vice versa.* The intersection between the future of c and the past of c_+ is the union of:

- a wedge between two light-like half-planes both containing c in their boundary,
- a wedge between two light-like half-planes both containing c_+ in their boundary,
- the space-like 2-plane between $\mathcal{A}_0$ and $\mathcal{A}_1$.

2 2 0 1 3 1 8 B
Jour. No Ms. No.
Dispatch: 3/9/2011
Total pages: 54
Disk Received ☑
Disk Used ☑
Journal: Commun. Math. Phys.
Not Used ☐
Corrupted ☐
Mismatch ☐

3. Singularities in Singular AdS-Spacetimes

In this paper, we require spacetimes to be oriented and time oriented. Therefore, by (regular) AdS-spacetime we mean an $(\mathrm{Isom}_0(\mathrm{AdS}_3), \mathrm{AdS}_3)$-manifold. In this section, we classify singular lines and singular points in singular AdS-spacetimes. Actually, our first concern is the AdS background, but all this analysis can be easily extended to a more general situation, leading in a straightforward way to the notion of singular dS-spacetimes; or singular flat spacetimes (with regular part locally modelled on the Minkowski space).

In order to understand the notion of singularities, let us consider first the similar situation in the classical case of Riemannian geometric structures, for example, of (singular) Euclidean manifolds (see p. 523-524 of [Thu98]). Locally, a singular point p in a singular Euclidean space is the intersection of various singular rays, the complement of these rays being locally isometric to $\mathbb{R}^3$. The singular rays look as if they were geodesic rays. Since the singular space is assumed to have a manifold topology, the space of rays, singular or not, starting from p is a topological 2-sphere $L(p)$: the *link* of p. Outside the singular rays, $L(p)$ is locally modeled on the space of rays starting from a point in the regular model, i.e. the 2-sphere $\mathbb{S}^2$ equipped with its usual round metric. But this metric degenerates on the singular points of $L(p)$, i.e. the singular rays. The way it may degenerate is described similarly: let r be a singular point in $L(p)$ (a singular ray), and let $\ell(p)$ be the space of rays in $L(p)$ starting from r. It is a topological circle, locally modeled on the space ℓ_0 of geodesic rays at a point in the metric sphere $\mathbb{S}^2$. The space ℓ_0 is naturally identified with the 1-sphere $\mathbb{S}^1$ of perimeter 2π, and locally $\mathbb{S}^1$-structures on topological circles $\ell(p)$ are easily classified: they are determined by a positive real number, the *cone angle*, and $\ell(p)$ is isomorphic to ℓ_0 if and only if this cone angle is 2π. Therefore, the link $L(p)$ is naturally equipped with a spherical metric with cone-angle singularities, and one easily recovers the geometry around p by a fairly intuitive construction, the *suspension* of $L(p)$. We refer to [Thu98] for further details.

Our approach in the AdS case is similar. The neighborhood of a singular point p is the suspension of its link $L(p)$, this link being a topological 2-sphere equipped with a structure whose regular part is locally modeled on the link HS^2 of a regular point in AdS_3, and whose singularities are suspensions of their links $\ell(r)$, which are circles locally modeled on the link of a point in HS^2.

However, the situation in the AdS case is much more intricate than in the Euclidean case, since there is a bigger variety of singularity types in $L(p)$: a singularity in $L(p)$, i.e. a singular ray through p can be time-like, space-like or light-like. Moreover, non-time-like lines may differ through the causal behavior near them (for the definition of the future and past of a singular line, see Sect. 3.6).

Proposition 3.1. *The various types of singular lines in* AdS *spacetimes are:*

- ***Time-like lines:*** *they correspond to massive particles (see Sect. 3.7.1).*
- ***Light-like lines of degree*** 2***:*** *they correspond to photons (see Remark 3.24).*
- ***Space-like lines of degree*** 2***:*** *they correspond to tachyons (see Sect. 3.7.2).*
- ***Future BTZ-like singular lines:*** *These singularities are characterized by the property that it is space-like, but has no future.*
- ***Past BTZ-like singular lines:*** *These singularities are characterized by the property that it is space-like, but has no past.*
- ***(Past or future) extreme BTZ-like singular lines:*** *they look like past/future BTZ-like singular lines, except that they are light-like.*

2 2 0 1 3 1 8 B
Jour. No Ms. No.
Dispatch: 3/9/2011
Total pages: 54
Disk Received ☑
Disk Used ☑
Journal: Commun. Math. Phys.
Not Used ☐
Corrupted ☐
Mismatch ☐

- ***Misner lines:*** *they are space-like, but have no future and no past. Moreover, any neighborhood of the singular lines contains closed time-like curves.*
- ***Light-like or space-like lines of degree*** $k \geq 4$***:*** *they can be described as* $k/2$*-branched cover over light-like or space-like lines of degree* 2 *(in particular, the degree* k *is even). They have the "unphysical" property of admitting a non-connected future.*

The several types of singular lines, as a not-so-big surprise, reproduce the several types of particles considered in physics. Some of these singularities appear in the physics litterature, but, as far as we know, not all of them (for example, the terminology *tachyons,* that we feel is adapted, does not seem to appear anywhere).

In Sect. 3.1 we briefly present the space HS^2 of rays through a point in AdS_3. In Sect. 3.2, we give the precise definition of regular HS-surfaces and their suspensions. In Sect. 3.3 we classify the circles locally modeled on links of points in HS^2, i.e. of singularities of singular HS-surfaces which can then be defined in the following Sect. 3.4. In this Sect. 3.4, we can state the definition of singular AdS spacetimes.

In Sect. 3.5, we classify singular lines. In Sect. 3.6 we define and study the causality notion in singular AdS spacetimes. In particular we define the notion of **causal HS-surface**, i.e. singular points admitting a neighborhood containing no closed causal curve. It is in this section that we establish the description of the causality relation near the singular lines as stated in Proposition 3.1.

Finally, in Sect. 3.7, we provide a geometric description of each singular line; in particular, we justify the "massive particle", "photon" and "tachyon" terminology.

Remark 3.2. More generally, HS^2 is the model of links of points in arbitrary Lorentzian manifolds. Analogs of Proposition 3.1 still hold in the context of flat or locally de Sitter manifolds.

3.1. HS geometry. Given a point p in $\widetilde{\mathrm{AdS}}_3$, let $L(p)$ be the link of p, *i.e.* the set of (non-parametrized) oriented geodesic rays based at p. Since these rays are determined by their tangent vector at p up to rescaling, $L(p)$ is naturally identified with the set of rays in $T_p\widetilde{\mathrm{AdS}}_3$. Geometrically, $T_p\widetilde{\mathrm{AdS}}_3$ is a copy of Minkowski space $\mathbb{R}^{1,2}$. Denote by HS^2 the set of geodesic rays issued from 0 in $\mathbb{R}^{1,2}$. It admits a natural decomposition in five subsets:

- the domains $\mathbb{H}^2_+$ and $\mathbb{H}^2_-$ composed respectively of future oriented and past oriented time-like rays,
- the domain dS^2 composed of space-like rays,
- the two circles $\partial\mathbb{H}^2_+$ and $\partial\mathbb{H}^2_-$, boundaries of $\mathbb{H}^2_\pm$ in HS^2.

The domains $\mathbb{H}^2_\pm$ are the Klein models of the hyperbolic plane, and dS^2 is the Klein model of de Sitter space of dimension 2. The group $\mathrm{SO}_0(1,2)$, *i.e.* the group of time-orientation preserving and orientation preserving isometries of $\mathbb{R}^{1,2}$, acts naturally (and projectively) on HS^2, preserving this decomposition.

The classification of elements of $\mathrm{SO}_0(1,2) \approx \mathrm{PSL}(2,\mathbb{R})$ is presumably well-known by most of the readers, but we stress here that it is related to the HS^2-geometry: let g be a non-trivial element of $\mathrm{SO}_0(1,2)$.

- g is *elliptic* if and only if it admits exactly two fixed points, one in $\mathbb{H}^2_+$, and the other (the opposite) in $\mathbb{H}^2_-$,
- g is *parabolic* if and only if it admits exactly two fixed points, one in $\partial\mathbb{H}^2_+$, and the other (the opposite) in $\partial\mathbb{H}^2_-$,

2 2 0 1 3 1 8 B
Jour. No Ms. No.
Dispatch: 3/9/2011
Total pages: 54
Disk Received ☑
Disk Used ☑
Journal: Commun. Math. Phys.
Not Used ☐
Corrupted ☐
Mismatch ☐

- g is *hyperbolic* if and only if it admits exactly 6 fixed points: two pairs of opposite points in $\partial\mathbb{H}^2_\pm$, and one pair of opposite points in dS^2.

In particular, g is elliptic (respectively hyperbolic) if and only if it admits a fixed in $\mathbb{H}^2_\pm$ (respectively in dS^2).

3.2. Suspension of regular HS-surfaces.

Definition 3.3. *A regular HS-surface is a topological surface endowed with a* $(\mathrm{SO}_0(1,2), \mathrm{HS}^2)$*-structure.*

The $\mathrm{SO}_0(1,2)$-invariant orientation on HS^2 induces an orientation on every regular HS-surface. Similarly, the dS^2 regions admit a canonical time orientation. Hence any regular HS-surface is oriented, and its de Sitter regions are time oriented.

Given a regular HS-surface Σ, and once a point p is fixed in $\widetilde{\mathrm{AdS}}_3$, we can construct a locally AdS manifold $e(\Sigma)$, called the suspension of Σ, defined as follows:

- for any v in $\mathrm{HS}^2 \approx L(p)$, let $r(v)$ be the geodesic ray issued from p tangent to v. If v lies in the closure of dS^2, it defines $e(v) := r(v)$; if v lies in $\mathbb{H}^2_\pm$, let $e(v)$ be the portion of $r(v)$ between p and the first conjugate point $p^\pm$.
- for any open subset U in HS^2, let $e(U)$ be the union of all $e(v)$ for v in U.

Observe that $e(U)\backslash\{p\}$ is an open domain in $\widetilde{\mathrm{AdS}}_3$, and that $e(\mathrm{HS}^2)$ is the intersection $E(p)$ between the future of the first conjugate point in the past and the past of the first conjugate point in the future (cf. the end of Sect. 2.2).

The regular HS-surface Σ can be understood as the disjoint union of open domains U_i in HS^2, glued one to the other by coordinate change maps g_{ij} given by restrictions of elements of $\mathrm{SO}_0(1,2)$:

$$g_{ij} : U_{ij} \subset U_j \to U_{ji} \subset U_i.$$

But $\mathrm{SO}_0(1,2)$ can be considered as the group of isometries of AdS_3 fixing p. Hence every g_{ij} induces an identification between $e(U_{ij})$ and $e(U_{ji})$. Define $e(\Sigma)$ as the disjoint union of the $e(U_i)$, quotiented by the relation identifying q in $e(U_{ij})$ with $g_{ij}(q)$ in $e(U_{ji})$. This quotient space contains a special point $\bar{p}$, represented in every $e(U_i)$ by p, and called the *vertex* (we will sometimes abusively denote $\bar{p}$ by p). The fact that Σ is a surface implies that $e(\Sigma)\backslash\bar{p}$ is a three-dimensional manifold, homeomorphic to $\Sigma \times \mathbb{R}$. The topological space $e(\Sigma)$ itself is homeomorphic to the cone over Σ. Therefore $e(\Sigma)$ is a (topological) manifold only when Σ is homeomorphic to the 2-sphere. But it is easy to see that every HS-structure on the 2-sphere is isomorphic to HS^2 itself; and the suspension $e(\mathrm{HS}^2)$ is simply the regular AdS-manifold $E(p)$.

Hence in order to obtain *singular* AdS-manifolds that are not merely *regular* AdS-manifolds, we need to consider (and define!) singular HS-surfaces.

Remark 3.4. A similar construction holds for locally flat or locally de Sitter spacetimes, leading, *mutatis mutandis* to the notion of flat or de Sitter suspensions of HS-surfaces.

3.3. Singularities in singular HS-surfaces. The classification of singularities in singular HS-surfaces essentially reduces (but not totally) to the classification of $\mathbb{RP}^1$-structures on the circle.

2 2 0 1 3 1 8 B
Jour. No Ms. No.
Dispatch: 3/9/2011
Total pages: 54
Disk Received ☑
Disk Used ☑
Journal: Commun. Math. Phys.
Not Used ☐
Corrupted ☐
Mismatch ☐

3.3.1. Real projective structures on the circle. Let $\mathbb{RP}^1$ be the real projective line, and let $\widetilde{\mathbb{RP}}^1$ be its universal covering. We fix a homeomorphism between $\widetilde{\mathbb{RP}}^1$ and the real line: this defines an orientation and an order $<$ on $\widetilde{\mathbb{RP}}^1$. Let G be the group $\mathrm{PSL}(2, \mathbb{R})$ of projective transformations of $\mathbb{RP}^1$, and let $\tilde{G}$ be its universal covering: it is the group of projective transformations of $\widetilde{\mathbb{RP}}^1$. We have an exact sequence:

$$0 \to \mathbb{Z} \to \tilde{G} \to G \to 0.$$

Let δ be the generator of the center $\mathbb{Z}$ such that for every x in $\widetilde{\mathbb{RP}}^1$ the inequality $\delta x > x$ holds. The quotient of $\widetilde{\mathbb{RP}}^1$ by $\mathbb{Z}$ is projectively isomorphic to $\mathbb{RP}^1$.

The elliptic-parabolic-hyperbolic classification of elements of G induces a similar classification for elements in $\tilde{G}$, according to the nature of their projection in G. Observe that non-trivial elliptic elements act on $\widetilde{\mathbb{RP}}^1$ as translations, *i.e.* freely and properly discontinuously. Hence the quotient space of their action is naturally a real projective structure on the circle. We call these quotient spaces *elliptic circles.* Observe that it includes the usual real projective structure on $\mathbb{RP}^1$.

Parabolic and hyperbolic elements can all be decomposed as a product $\tilde{g} = \delta^k g$, where g has the same nature (parabolic or hyperbolic) as $\tilde{g}$, but admits fixed points in $\widetilde{\mathbb{RP}}^1$. The integer $k \in \mathbb{Z}$ is uniquely defined. Observe that if $k \neq 0$, the action of $\tilde{g}$ on $\widetilde{\mathbb{RP}}^1$ is free and properly discontinuous. Hence the associated quotient space, which is naturally equipped with a real projective structure, is homeomorphic to the circle. We call it a *parabolic* or *hyperbolic circle,* according to the nature of g, *of degree* k. Inverting $\tilde{g}$ if necessary, we can always assume, up to a real projective isomorphism, that $k \geq 1$.

Finally, let g be a parabolic or hyperbolic element of $\tilde{G}$ fixing a point x_0 in $\widetilde{\mathbb{RP}}^1$. Let x_1 be the unique fixed point of g such that $x_1 > x_0$ and such that g admits no fixed point between x_0 and x_1: if g is parabolic, $x_1 = \delta x_0$; and if g is hyperbolic, x_1 is the unique g-fixed point in $]x_0, \delta x_0[$. Then the action of g on $]x_0, x_1[$ is free and properly discontinuous, the quotient space is a *parabolic* or *hyperbolic circle of degree* 0.

These examples exhaust the list of real projective structures on the circle up to a real projective isomorphism. We briefly recall the proof: the developing map $d : \mathbb{R} \to \widetilde{\mathbb{RP}}^1$ of a real projective structure on $\mathbb{R}/\mathbb{Z}$ is a local homeomorphism from the real line into the real line, hence a homeomorphism onto its image I. Let $\rho : \mathbb{Z} \to \tilde{G}$ be the holonomy morphism: being a homeomorphism, d induces a real projective isomorphism between the initial projective circle and $I/\rho(\mathbb{Z})$. In particular, $\rho(1)$ is non-trivial, preserves I, and acts freely and properly discontinuously on I. An easy case-by-case study leads to a proof of our claim.

It follows that every cyclic subgroup of $\tilde{G}$ is the holonomy group of a real projective circle, and that two such real projective circles are projectively isomorphic if and only if their holonomy groups are conjugate one to the other. But some subtlety appears if one takes into consideration the orientations: usually, by real projective structure we mean a $(\mathrm{PGL}(2, \mathbb{R}), \mathbb{RP}^1)$-structure, i.e. coordinate changes might reverse the orientation. In particular, two such structures are isomorphic if there is a real projective transformation conjugating the holonomy groups, even if this transformation reverses the orientation. But here, by $\mathbb{RP}^1$-circle we mean a $(G, \mathbb{RP}^1)$-structure on the circle, with $G = \mathrm{PSL}(2, \mathbb{R})$. In particular, it admits a canonical orientation, preserved by the holonomy group: the one whose lifting to $\mathbb{R}$ is such that the developing map is orientation preserving. To be a $\mathbb{RP}^1$-isomorphism, a real projective conjugacy needs to preserve this orientation.

Let L be a $\mathbb{RP}^1$-circle. Let γ_0 be the generator of $\pi_1(L)$ such that, for the canonical orientation defined above, and for every x in the image of the developing map:

$$\rho(\gamma_0)x > x. \tag{1}$$

Let $\rho(\gamma_0) = \delta^k g$ be the decomposition such that g admits fixed points in $\widetilde{\mathbb{RP}}^1$. According to the inequality (1), the degree k is non-negative. Moreover:

The elliptic case. Elliptic $\mathbb{RP}^1$-circles (*i.e.* with elliptic holonomy) are uniquely parametrized by a positive real number (the angle).

The case $k \geq 1$. Non-elliptic $\mathbb{RP}^1$-circles of degree $k \geq 1$ are uniquely parametrized by the pair $(k, [g])$, where $[g]$ is a conjugacy class in G. Hyperbolic conjugacy classes are uniquely parametrized by a positive real number: the modulus of their trace. There are exactly two parabolic conjugacy classes: the *positive parabolic class,* composed of the parabolic elements g such that $gx \geq x$ for every x in $\widetilde{\mathbb{RP}}^1$, and the *negative parabolic class,* made of the parabolic elements g such that $gx \leq x$ for every x in $\widetilde{\mathbb{RP}}^1$ (this terminology is justified in Sect. 3.7.5, and Remark 3.18).

The case $k = 0$. In this case, L is isomorphic to the quotient by g of a segment $]x_0, x_1[$ admitting as extremities two successive fixed points of g. Since we must have $gx > x$ for every x in this segment, g cannot belong to the negative parabolic class: *Every parabolic $\mathbb{RP}^1$-circle of degree 0 is positive.* Concerning the hyperbolic $\mathbb{RP}^1$-circles, the conclusion is the same as in the case $k \geq 1$: they are uniquely parametrized by a positive real number. Indeed, given a hyperbolic element g in $\tilde{G}$, any $\mathbb{RP}^1$-circle of degree 0 with holonomy g is a quotient of a segment $]x_0, x_1[$, where the left extremity x_0 is a repelling fixed point of g, and the right extremity an attractive fixed point.

3.3.2. HS-singularities. For every p in HS^2, let $\ell(p)$ the link of p, *i.e.* the space of rays in $T_p\,\mathrm{HS}^2$. Such a ray v defines an oriented projective line c_v starting from p. Let Γ_p be the stabilizer in $\mathrm{SO}_0(1,2) \approx \mathrm{PSL}(2,\mathbb{R})$ of p.

Definition 3.5. *A $(\Gamma_p, \ell(p))$-circle is the data of a point p in HS^2 and a $(\Gamma_p, \ell(p))$-structure on the circle.*

Since HS^2 is oriented, $\ell(p)$ admits a natural $\mathbb{RP}^1$-structure, and thus every $(\Gamma_p, \ell(p))$-circle admits a natural underlying $\mathbb{RP}^1$-structure.

Given a $(\Gamma_p, \ell(p))$-circle L, we construct a singular HS-surface $\mathfrak{e}(L)$: for every element v in the link of p, define $\mathfrak{e}(v)$ as the closed segment $[-p, p]$ contained in the projective ray defined by v, where $-p$ is the antipodal point of p in HS^2, and then operate as we did for defining the AdS space $e(\Sigma)$ associated to a regular HS-surface. The resulting space $\mathfrak{e}(L)$ is topologically a sphere, locally modeled on HS^2 in the complement of two singular points corresponding to p and $-p$. These singular points will be typical singularities in singular HS-surfaces. Here, the singularity corresponding to p as a preferred status, as representation a $(\Gamma_p, \ell(p))$-singularity.

There are several types of singularity, mutually non isomorphic:

- *time-like singularities:* they correspond to the case where p lies in $\mathbb{H}^2_\pm$. Then, Γ_p is a 1-parameter elliptic subgroup of G, and L is an elliptic $\mathbb{RP}^1$-circle. When p lies in $\mathbb{H}^2_+$ (respectively $\mathbb{H}^2_-$), then the singularity is a future (respectively past) time-like singularity.
- *space-like singularities:* when p lies in dS^2, Γ_p is a one-parameter subgroup consisting of hyperbolic elements of $\mathrm{SO}_0(1,2)$, and L is a hyperbolic $\mathbb{RP}^1$-circle.

2 2 0 1 3 1 8 B
Jour. No Ms. No.
Dispatch: 3/9/2011
Total pages: 54
Disk Received ☑
Disk Used ☑
Journal: Commun. Math. Phys.
Not Used ☐
Corrupted ☐
Mismatch ☐

- *light-like singularities:* it is the case where p lies in $\partial\mathbb{H}^2_\pm$. The stabilizer Γ_p is a one-parameter subgroup consisting of parabolic elements of $SO_0(1,2)$, and the link L is a parabolic $\mathbb{RP}^1$-circle. We still have to distinguish between past and future light-like singularities.

It is easy to classify time-like singularities up to (local) HS-isomorphisms: they are locally characterized by their underlying structure of the elliptic $\mathbb{RP}^1$-circle. In other words, time-like singularities are nothing but the usual cone singularities of hyperbolic surfaces, since they admit neighborhoods locally modeled on the Klein model of the hyperbolic disk.

But there are several types of space-like singularities, according to the causal structure around them. More precisely: recall that every element v of $\ell(p)$ is a ray in $T_p\,\mathrm{HS}^2$, tangent to a parametrized curve c_v starting at p and contained in a projective line of $\mathrm{HS}^2 = \mathbb{P}(\mathbb{R}^{1,2})$. Taking into account that dS^2 is the Klein model of the 2-dimensional de Sitter space, it follows that v, as a direction in a Lorentzian spacetime, can be a time-like, light-like or space-like direction. Moreover, in the two first cases, it can be future oriented or past oriented.

Definition 3.6. *If p lies in dS^2, we denote by $i^+(\ell(p))$ (respectively $i^-(\ell(p))$) the set of future oriented (resp. past oriented) directions.*

Observe that $i^+(\ell(p))$ and $i^-(\ell(p))$ are connected, and that their complement in $\ell(p)$ has two connected components.

This notion can be extended to light-like singularities:

Definition 3.7. *If p lies in $\partial\mathbb{H}^2_+$, the domain $i^+(\ell(p))$ (respectively $i^-(\ell(p))$) is the set of directions v such that $c_v(s)$ lies in $\mathbb{H}^2_+$ (respectively dS^2) for s sufficiently small. Similarly, if p lies in $\partial\mathbb{H}^2_-$, the domain $i^-(\ell(p))$ (respectively $i^+(\ell(p))$) is the set of directions v such that $c_v(s)$ lies in $\mathbb{H}^2_-$ (respectively dS^2) for s sufficiently small.*

In this situation, $i^+(\ell(p))$ and $i^-(\ell(p))$ are the connected components of the complement of the two points in $\ell(p)$ which are directions tangent to $\partial\mathbb{H}^2_\pm$.

For time-like singularities, we simply define $i^+(\ell(p)) = i^-(\ell(p)) = \emptyset$.

Finally, observe that the extremities of the arcs $i^\pm(\ell(p))$ are precisely the fixed points of Γ_p.

Definition 3.8. *Let L be a $(\Gamma_p, \ell(p))$-circle. Let $d : \tilde{L} \to \ell(p)$ the developing map. The preimages $d^{-1}(i^+(\ell(p)))$ and $d^{-1}(i^-(\ell(p)))$ are open domain in $\tilde{L}$, preserved by the deck transformations. Their projections in L are denoted respectively by $i^+(L)$ and $i^-(L)$.*

We invite the reader to convince himself that the $\mathbb{RP}^1$-structure and the additional data of $i^\pm(L)$ determine the $(\Gamma_p, \ell(p))$-structure on the link, hence the HS-singular point up to HS-isomorphism.

In the sequel, we present all the possible types of singularities, according to the position in HS^2 of the reference point p, and according to the degree of the underlying $\mathbb{RP}^1$-circle. Some of them are called BTZ-like or Misner singularities; the reason for this terminology will be explained later in Sects. 3.7.4, 3.7.3, respectively.

(1) *time-like singularities:* We have already observed that they are easily classified: they can be considered as $\mathbb{H}^2$-singularities. They are characterized by their cone angle, and by their future/past quality.

2 2 0 1 3 1 8 B
Jour. No Ms. No.
Dispatch: 3/9/2011
Total pages: 54
Disk Received ☑
Disk Used ☑
Journal: Commun. Math. Phys.
Not Used ☐
Corrupted ☐
Mismatch ☐

(2) *space-like singularities of degree* 0*:* Let L be a space-like singularity of degree 0, *i.e.* a $(\Gamma_p, \ell(p))$-circle such that the underlying hyperbolic $\mathbb{RP}^1$-circle has degree 0. Then the holonomy of L is generated by a hyperbolic element g, and L is isomorphic to the quotient of an interval I of $\ell(p)$ by the group $\langle g \rangle$ generated by g. The extremities of I are fixed points of g, therefore we have three possibilities:
- If $I = i^+(\ell(p))$, then $L = i^+(L)$ and $i^-(L) = \emptyset$. The singularity is then called a *BTZ-like past singularity*.
- If $I = i^-(\ell(p))$, then $L = i^-(L)$ and $i^+(L) = \emptyset$. The singularity is then called a *BTZ-like future singularity*.
- If I is a component of $\ell(p) \setminus (i^+(\ell(p)) \cup i^-(\ell(p)))$, then $i^+(L) = i^-(L) = \emptyset$. The singularity is a *Misner singularity*.

(3) *light-like singularities of degree* 0*:* When p lies in $\partial\mathbb{H}^2_+$, and when the underlying parabolic $\mathbb{RP}^1$-circle has degree 0, then L is the quotient of $i^+(\ell(p))$ or $i^-(\ell(p))$ by a parabolic element.
- If $I = i^+(\ell(p))$, then $L = i^+(L)$ and $i^-(L) = \emptyset$. The singularity is then called a *future cuspidal singularity*. Indeed, in that case, a neighborhood of the singular point in $\mathfrak{e}(L)$ with the singular point removed is an annulus locally modelled on the quotient of $\mathbb{H}^2_+$ by a parabolic isometry, *i.e.*, a hyperbolic cusp.
- If $I = i^-(\ell(p))$, then $L = i^-(L)$ and $i^+(L) = \emptyset$. The singularity is then called a *extreme BTZ-like future singularity*.

The case where p lies in $\partial\mathbb{H}^2_-$ and L of degree 0 is similar; we get the notion of *past cuspidal singularity* and *extreme BTZ-like past singularity*.

(4) *space-like singularities of degree* $k \geq 1$*:* when the singularity is space-like of degree $k \geq 1$, *i.e.* when L is a hyperbolic $(\Gamma_p, \ell(p))$-circle of degree ≥ 1, the situation is slightly more complicated. In that situation, L is the quotient of the universal covering $\tilde{L}_p \approx \widetilde{\mathbb{RP}}^1$ by a group generated by an element of the form $\delta^k g$, where δ is in the center of $\tilde{G}$ and g admits fixed points in $\tilde{L}_p$. Let $I^\pm$ be the preimage in $\tilde{L}_p$ of $i^\pm(\ell(p))$ by the developing map. Let x_0 be a fixed point of g in $\tilde{L}_p$ which is a left extremity of a component of I^+ (recall that we have prescribed an orientation, *i.e.* an order, on the universal covering of any $\mathbb{RP}^1$-circle: the one for which the developing map is increasing). Then, this component is an interval $]x_0, x_1[$, where x_1 is another g-fixed point. All the other g-fixed points are the iterates $x_{2i} = \delta^i x_0$ and $x_{2i+1} = \delta^i x_1$. The components of I^+ are the intervals $\delta^{2i}]x_0, x_1[$ and the components of I^- are $\delta^{2i+1}]x_0, x_1[$. It follows that the degree k is an even integer. We have a dichotomy:
- If, for every integer i, the point x_{2i} (*i.e.* the left extremities of the components of I^+) is a repelling fixed point of g, then the singularity is a *positive space-like singularity of degree* k.
- In the other case, *i.e.* if the left extremities of the components of I^+ are attracting fixed points of g, then the singularity is a *negative space-like singularity of degree* k.

In other words, the singularity is positive if and only if for every x in I^+ we have $gx \geq x$.

(5) *light-like singularities of degree* $k \geq 1$*:* Similarly, parabolic $(\Gamma_p, \ell(p))$-circles have even degree, and the dichotomy past/future among parabolic $(\Gamma_p, \ell(p))$-circles of degree ≥ 2 splits into two subcases: the positive case for which the parabolic element g satisfies $gx \geq x$ on $\tilde{L}_p$, and the negative case satisfying the reverse

2 2 0 1 3 1 8 B
Jour. No Ms. No.
Dispatch: 3/9/2011
Total pages: 54
Disk Received ☑
Disk Used ☑
Journal: Commun. Math. Phys.
Not Used ☐
Corrupted ☐
Mismatch ☐

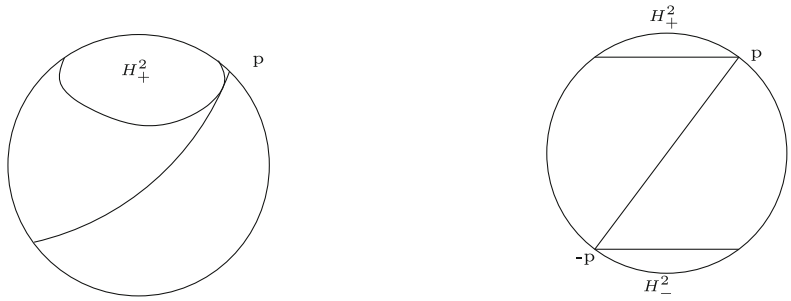

Fig. 1. A cuspidal singularity appears by taking the quotient of a half-sphere in HS^2 containing $\mathbb{H}^2_+$ and tangent to $\partial\mathbb{H}^2_+$ at a point p. The opposite point $-p$ then corresponds to a past extreme BTZ-like singularity

inequality (this positive/negative dichotomy is inherent of the structure of $\widetilde{\mathbb{RP}}^1$-circle data, cf. the end of Sect. 3.3.1).

Remark 3.9. In the previous section we observed that there is only one $\mathbb{RP}^1$ hyperbolic circle of holonomy $\langle g\rangle$ up to $\mathbb{RP}^1$-isomorphism, but this remark does not extend to hyperbolic $(\Gamma_p, \ell(p))$-circles since a real projective conjugacy between g and g^{-1}, if preserving the orientation, must permute time-like and space-like components. Hence positive hyperbolic $(\Gamma_p, \ell(p))$-circles and negative hyperbolic $(\Gamma_p, \ell(p))$-circles are not isomorphic.

Remark 3.10. Let L be a $(\Gamma_p, \ell(p))$-circle. The suspension $\mathfrak{e}(L)$ admits two singular points $\bar{p}$, $-\bar{p}$, corresponding to p and $-p$. Observe that when p is space-like, $\bar{p}$ and $-\bar{p}$, as HS-singularities, are always isomorphic. When p is time-like, one of the singularities is future time-like and the other is past time-like. If $\bar{p}$ is a future light-like singularity of degree $k \geq 1$, then $-\bar{p}$ is a *past* light-like singularity of degree k, and *vice versa*.

Finally, let $\bar{p}$ be a future cuspidal singularity. The $(\Gamma_p, \ell(p))$-circle L is the quotient by a cyclic group of the set of rays in $T_p\,\mathrm{HS}^2$ tangent to projective rays contained in $\mathbb{H}^2_+$. It follows that the suspension $\mathfrak{e}(L)$ is a cyclic quotient of the domain in HS^2 delimited by the projective line tangent to $\partial\mathbb{H}^2_+$ at p and containing $\mathbb{H}^2_+$. This half-space does not contain $\mathbb{H}^2_-$. It follows that $-\bar{p}$ is not a past cuspidal singularity, but rather a past extreme BTZ-like singularity (see Fig. 1).

3.4. Singular HS-surfaces. Once we know all possible HS-singularities, we can define singular HS-surfaces:

Definition 3.11. *A singular HS-surface Σ is an oriented surface containing a discrete subset $\mathcal{S}$ such that $\Sigma \setminus \mathcal{S}$ is a regular HS-surface, and such that every p in $\mathcal{S}$ admits a neighborhood HS-isomorphic to an open subset of the suspension $\mathfrak{e}(L)$ of a $(\Gamma_p, \ell(p))$-circle L.*

The construction of AdS-manifolds $e(\Sigma)$ extends to singular HS-surfaces:

Definition 3.12. *A singular AdS spacetime is a 3-manifold M containing a closed subset $\mathcal{L}$ (the singular set) such that $M \setminus \mathcal{L}$ is a regular AdS-spacetime, and such that every x in $\mathcal{L}$ admits a neighborhood AdS-isomorphic to the suspension $e(\Sigma)$ of a singular HS-surface.*

2 2 0 1 3 1 8 B
Jour. No Ms. No.
Dispatch: 3/9/2011
Total pages: 54
Disk Received ☑
Disk Used ☑
Journal: Commun. Math. Phys.
Not Used ☐
Corrupted ☐
Mismatch ☐

Since we require M to be a manifold, each cone $e(\Sigma)$ must be a 3-ball, *i.e.* each surface Σ must be actually homeomorphic to the 2-sphere.

There are two types of points in the singular set of a singular AdS spacetime:

Definition 3.13. *Let M be a singular AdS spacetime. A singular line in M is a connected subset of the singular set composed of the points x such that every neighborhood of x is AdS-isomorphic to the suspension $e(\Sigma_x)$, where Σ_x is a singular HS-surface $\mathfrak{e}(L_x)$, where L_x is a $(\Gamma_p, \ell(p))$-circle. An interaction (or collision) in M is a point x in the singular set which is not on a singular line.*

Consider point x in a singular line. Then, by definition, a neighborhood U of x is isomorphic to the suspension $e(\Sigma_x)$, where the HS-sphere Σ_x is the suspension of a $(\Gamma_p, \ell(p))$-circle L. The suspension $\mathfrak{e}(L)$ contains precisely two opposite points $\bar{p}$ and $-\bar{p}$. Each of them defines a ray in U, and every point x' in these rays are singular points, whose links are also described by the same singular HS-sphere $\mathfrak{e}(L)$.

Therefore, we can define the type of the singular line: it is the type of the $(\Gamma_p, \ell(p))$-circle describing the singularity type of each of its elements. Therefore, a singular line is time-like, space-like or light-like, and it has a degree.

On the other hand, when x is an interaction, then the HS-sphere Σ_x is not the suspension of a $(\Gamma_p, \ell(p))$-circle. Let $\bar{p}$ be a singularity of Σ_x. It defines in $e(\Sigma_x)$ a ray, and for every y in this ray, the link of y is isomorphic to the suspension $e(L)$ of the $(\Gamma_p, \ell(p))$-circle defining the singular point $\bar{p}$.

It follows that the interactions form a discrete closed subset. In the neighborhood of an interaction, with the interaction removed, the singular set is an union of singular lines, along which the singularity-type is constant (however see Remark 3.10).

3.5. Classification of singular lines. The classification of singular lines, *i.e.* of $(\Gamma_p, \ell(p))$-circles, follows from the classification of singularities of singular HS-surfaces:

- *time-like lines,*
- *space-like or light-like line of degree* 2*,*
- *BTZ-like singular lines,* extreme or not, past or future,
- *Misner lines,*
- *space-like or light-like line of degree $k \geq 4$.* Recall that the degree is necessarily even.

Indeed, according to Remark 3.10, what could have been called a cuspidal singular line, is actually an extreme BTZ-like singular line.

3.6. Local future and past of singular points. In the previous section, we almost completed the proof of Proposition 3.1, except that we still have to describe, as stated in this proposition, what is the future and the past of the singular line (in particular, that the future and the past of non-time-like lines of degree $k \geq 2$ has $k/2$ connected components), and to see that Misner lines are surrounded by closed causal curves.

Let M be a singular AdS-manifold M. Outside the singular set, M is isometric to an AdS manifold. Therefore one can define as usual the notion of time-like or causal curve, at least outside singular points.

If x is a singular point, then a neighborhood U of x is isomorphic to the suspension of a singular HS-surface Σ_x. Every point in Σ_x, singular or not, is the direction of a

line ℓ in U starting from x. When x is singular, ℓ is a singular line, in the meaning of Definition 3.13; if not, ℓ, with x removed, is a geodesic segment. Hence, we can extend the notion of causal curves, allowing them to cross an interaction or a space-like singular line, or to go for a while along a time-like or a light-like singular line.

Once this notion is introduced, one can define the future $I^+(x)$ of a point x as the set of final extremities of future oriented time-like curves starting from x. Similarly, one defines the past $I^-(x)$, and the causal past/future $J^\pm(x)$.

Let $\mathbb{H}^+_x$ (resp. $\mathbb{H}^-_x$) be the set of future (resp. past) time-like elements of the HS-surface Σ_x. It is easy to see that the local future of x in $e(\Sigma_x)$, which is locally isometric to M, is the open domain $e(\mathbb{H}^+_x) \subset e(\Sigma_x)$. Similarly, the past of x in $e(\Sigma_x)$ is $e(\mathbb{H}^-_x)$.

It follows that the causality relation in the neighborhood of a point in a time-like singular line has the same feature as the causality relation near a regular point: the local past and the local future are non-empty connected open subsets, bounded by light-like geodesics. The same is true for a light-like or space-like singular line of degree exactly 2.

On the other hand, points in a future BTZ-like singularity, extreme or not, have no future, and only one past component. This past component is moreover isometric to the quotient of the past of a point in $\widetilde{\mathrm{AdS}}_3$ by a hyperbolic (parabolic in the extreme case) isometry fixing the point. Hence, it is homeomorphic to the product of an annulus by the real line.

If L has degree $k \geq 4$, then the local future of a singular point in $e(\mathfrak{e}(L))$ admits $k/2$ components, hence at least 2, and the local past as well. This situation is quite unusual, and in our further study we exclude it: **from now on, we always assume that light-like or space-like singular lines have degree** 0 **or** 2**.**

Points in Misner singularities have no future, and no past. Besides, any neighborhood of such a point contains closed time-like curves (CTC in short). Indeed, in that case, $\mathfrak{e}(L)$ is obtained by glueing the two space-like sides of a bigon entirely contained in the de Sitter region dS^2 by some isometry g, and for every point x in the past side of this bigon, the image gx lies in the future of x: any time-like curve joining x to gx induces a CTC in $\mathfrak{e}(L)$. But:

Lemma 3.14. *Let Σ be a singular HS-surface. Then the singular AdS-manifold $e(\Sigma)$ contains closed causal curves (CCC in short) if and only if the de Sitter region of Σ contains CCC. Moreover, if it is the case, every neighborhood of the vertex of $e(\Sigma)$ contains a CCC of arbitrarily small length.*

Proof. Let $\bar{p}$ be the vertex of $e(\Sigma)$. Let $\mathbb{H}^\pm_{\bar{p}}$ denote the future and past hyperbolic part of Σ, and let $\mathrm{dS}_{\bar{p}}$ be the de Sitter region in Σ. As we have already observed, the future of $\bar{p}$ is the suspension $e(\mathbb{H}^+_{\bar{p}})$. Its boundary is ruled by future oriented lightlike lines, singular or not. It follows, as in the regular case, that any future oriented time-like line entering in the future of $\bar{p}$ remains trapped therein and cannot escape anymore: such a curve cannot be part of a CCC. Furthermore, the future $e(\mathbb{H}^+_{\bar{p}})$ is isometric to the product $(-\pi/2, \pi/2) \times \mathbb{H}^+_{\bar{p}}$ equipped with the singular Lorentz metric $-dt^2 + \cos^2(t) g_{hyp}$, where g_{hyp} is the singular hyperbolic metric with cone singularities on $\mathbb{H}^+_{\bar{p}}$ induced by the HS-structure. The coordinate t induces a time function, strictly increasing along causal curves. Therefore, $e(\mathbb{H}^+_{\bar{p}})$ contains no CCC.

It follows that CCC in $e(\Sigma)$ avoid the future of $\bar{p}$. Similarly, they avoid the past of $\bar{p}$: all CCC are entirely contained in the suspension $e(\mathrm{dS}^2_{\bar{p}})$ of the de Sitter region of Σ.

For any real number ϵ, let $f_\epsilon : \mathrm{dS}^2_{\bar{p}} \to e(\mathrm{dS}^2_{\bar{p}})$ be the map associating to v in the de Sitter region the point at distance ϵ to $\bar{p}$ on the space-like geodesic $r(v)$. Then the image of f_ϵ is a singular Lorentzian submanifold locally isometric to the de Sitter space rescaled by a factor $\lambda(\epsilon)$. Moreover, f_ϵ is a conformal isometry: its differential multiply by $\lambda(\epsilon)$ the norms of tangent vectors. Since $\lambda(\epsilon)$ tends to 0 with ϵ, it follows that if Σ has a CCC, then $e(\Sigma)$ has a CCC of arbitrarily short length.

Conversely, if $e(\Sigma)$ has a CCC, it can be projected along the radial directions on a surface corresponding to a fixed value of ϵ, keeping it causal, as can be seen from the explicit form of the metric on $e(\Sigma)$ above. It follows that, when $e(\Sigma)$ has a CCC, Σ also has one. This finishes the proof of the lemma. □

The proof of Proposition 3.1 is now complete.

Remark 3.15. All this construction can be adapted, with minor changes, to the flat or de Sitter situation, leading to a definition of singular flat or de Sitter spacetimes, locally modeled on suspensions of singular HS-surfaces. For examples, in the proof of Lemma 3.14, one has just to change the metric $-dt^2 + \cos^2(t) g_{hyp}$ by $-dt^2 + y^2 g_{hyp}$ in the flat case, and by $-dt^2 + \cosh^2(t) g_{hyp}$ in the de Sitter case.

From now on, we will restrict our attention to HS-surfaces without CCC and corresponding to singular points where the future and the past, if non-empty, are connected:

Definition 3.16. *A singular* HS-*surface is* **causal** *if it admits no singularity of degree* ≥ 4 *and no CCC. A singular line is causal if the suspension* $\mathfrak{e}(L)$ *of the associated* $(\Gamma_p, \ell(p))$*-circle* L *is causal.*

In other words, a singular HS-surface is causal if the following singularity types are excluded:

- space-like or light-like singularities of degree ≥ 4,
- Misner singularities.

3.7. Geometric description of HS-singularities and AdS singular lines. The approach of singular lines we have given so far has the advantage to be systematic, but is quite abstract. In this section, we give cut-and-paste constructions of singular AdS-spacetimes which provide a better insight on the geometry of AdS singularities.

3.7.1. Massive particles. Let D be a domain in $\widetilde{\mathrm{AdS}}_3$ bounded by two time-like totally geodesic half-planes P_1, P_2 sharing as common boundary a time-like geodesic c. The angle θ of D is the angle between the two geodesic rays $H \cap P_1$, $H \cap P_2$ issued from $c \cap H$, where H is a totally geodesic hyperbolic plane orthogonal to c. Glue P_1 to P_2 by the elliptic isometry of $\widetilde{\mathrm{AdS}}_3$ fixing c pointwise. The resulting space, up to isometry, only depends on θ, and not on the choices of c and of D with angle θ. The complement of c is locally modeled on AdS_3, while c corresponds to a cone singularity with some cone angle θ.

We can also consider a domain D, still bounded by two time-like planes, but not embedded in $\widetilde{\mathrm{AdS}}_3$, wrapping around c, maybe several times, by an angle $\theta > 2\pi$. Glueing as above, we obtain a singular spacetime with angle $\theta > 2\pi$.

In these examples, the singular line is a time-like singular line, and all time-like singular lines are clearly produced in this way.

2 2 0 1 3 1 8 B
Jour. No Ms. No.
Dispatch: 3/9/2011
Total pages: 54
Disk Received ☑
Disk Used ☑
Journal: Commun. Math. Phys.
Not Used ☐
Corrupted ☐
Mismatch ☐

Remark 3.17. There is an important literature in physics involving such singularities, in the AdS background like here or in the Minkowski space background, where they are called wordlines, or cosmic strings, describing a massive particle in motion, with mass $m := 1 - \theta/2\pi$. Hence $\theta > 2\pi$ corresponds to particles with negative mass - but they are usually not considered in physics. See for example [Car03, p. 41-42]. Let us mention in particular a famous example by R. Gott in [Got91], followed by several papers (for example, [Gra93, CFGO94, Ste94]) where it is shown that a (flat) spacetime containing two such singular lines may present some causal pathology at large scale.

3.7.2. Tachyons. Consider a space-like geodesic c in $\widetilde{\mathrm{AdS}}_3$, and two time-like totally geodesic planes Q_1, Q_2 containing c. We will also consider the two light-like totally geodesic subspaces L_1 and L_2 of $\widetilde{\mathrm{AdS}}_3$ containing c, and, more generally, the space $\mathcal{P}$ of totally geodesic subspaces containing c. Observe that the future of c, near c, is bounded by L_1 and L_2.

We choose an orientation of c: the orientation of $\widetilde{\mathrm{AdS}}_3$ then induces a (counterclockwise) orientation on $\mathcal{P}$, hence on every loop turning around c. We choose the indexation of the various planes Q_1, Q_2, L_1 and L_2 such that every loop turning counterclockwise around x, enters in the future of c through L_1, then crosses successively Q_1, Q_2, and finally exits from the future of c through L_2. Observe that if we had considered the past of c instead of the future, we would have obtained the same indexation.

The planes Q_1 and Q_2 intersect each other along infinitely many space-like geodesics, always under the same angle. In each of these planes, there is an open domain P_i bounded by c and another component c_+ of $Q_1 \cap Q_2$ in the future of c and which does not intersect another component of $Q_1 \cap Q_2$. The component c_+ is a space-like geodesic, which can also be defined as the set of first conjugate points in the future of points in c (cf. the end of Sect. 2.2).

The union $c \cup c_+ \cup P_1 \cup P_2$ disconnects $\widetilde{\mathrm{AdS}}_3$. One of these components, denoted W, is contained in the future of c and the past of c_+. Let D be the other component, containing the future of c_+ and the past of c. Consider the closure of D, and glue P_1 to P_2 by a hyperbolic isometry of $\widetilde{\mathrm{AdS}}_3$ fixing every point in c and c_+. The resulting spacetime contains two space-like singular lines, still denoted by c, c_+, and is locally modeled on AdS_3 on the complement of these lines (see Fig. 2).

Clearly, these singular lines are space-like singularities, isometric to the singularities associated to a space-like $(\Gamma_p, \ell(p))$-circle L of degree two. We claim furthermore that c is positive. Indeed, the $(\Gamma_p, \ell(p))$-circle L is naturally identified with $\mathcal{P}$. Our choice of indexation implies that the left extremity of $i^+(L)$ is L_1. Since the holonomy sends Q_1 onto Q_2, the left extremity L_1 is a repelling fixed point of the holonomy. Therefore, the singular line corresponding to c is positive according to our terminology.

On the other hand, a similar reasoning shows that the space-like singular line c_+ is *negative*. Indeed, the totally geodesic plane L_1 does not correspond anymore to the left extremities of the time-like components in the $(\Gamma_p, \ell(p))$-circle associated to c_+, but to the right extremities.

Remark 3.18. Consider a time-like geodesic ℓ in $\widetilde{\mathrm{AdS}}_3$, hitting the boundary of the future of c at a point in P_1. This geodesic corresponds to a time-like geodesic ℓ' in the singular spacetime defined by our cut-and-paste surgery which coincides with ℓ before crossing P_1, and, after the crossing, with the image ℓ' of ℓ by the holonomy. The direction of ℓ' is closer to L_2 than was ℓ.

2 2 0 1 3 1 8 B
Jour. No Ms. No.
Dispatch: 3/9/2011
Total pages: 54
Disk Received ☑
Disk Used ☑
Journal: Commun. Math. Phys.
Not Used ☐
Corrupted ☐
Mismatch ☐

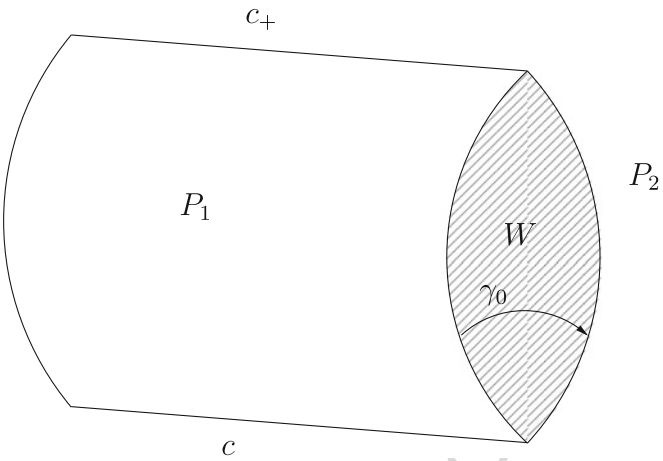

Fig. 2. By removing the domain W and glueing P_1 to P_2 one gets a spacetime with two tachyons. If we keep W and glue P_1 to P_2, we obtain a spacetime with one future BTZ singular line and one past BTZ singular line

In other words, the situation is as if the singular line c were attracting the lightrays, *i.e.* had positive mass. This is the reason why we call c a *positive* singular line (Sect. 3.8).

There is an alternative description of these singularities: start again from a space-like geodesic c in $\widetilde{\mathrm{AdS}}_3$, but now consider two space-like half-planes S_1, S_2 with common boundary c, such that S_2 lies above S_1, *i.e.* in the future of S_1, and such that every time-like geodesic intersecting S_1 intersects S_2 (see Fig. 3). Then remove the intersection V between the past of S_2 and the future of S_1, and glue S_1 to S_2 by a hyperbolic isometry fixing every point in c. The resulting singular spacetime contains a singular space-like line. It should be clear to the reader that this singular line is space-like of degree 2 and negative. If instead of removing a wedge V we insert it in the spacetime obtained by cutting $\widetilde{\mathrm{AdS}}_3$ along a space-like half-plane S, we obtain a spacetime with a positive space-like singularity of degree 2.

Last but not least, there is another way to construct space-like singularities of degree 2. Given the space-like geodesic c, let L_1^+ be the future component of $L_1 \setminus c$. Cut along L_1^+, and glue back by a hyperbolic isometry γ fixing every point in c. More precisely, we consider the singular spacetime such that for every future oriented time-like curve in $\widetilde{\mathrm{AdS}}_3 \setminus L_1^+$ terminating at L_1^+, a point x can be continued in the singular spacetime by a future oriented time-like curve starting from γx. Once more, we obtain a singular AdS-spacetime containing a space-like singular line of degree 2. We leave to the reader the proof of the following fact: *the singular line is positive mass if and only if for every x in L_1^+ the light-like segment $[x, \gamma x]$ is past-oriented, i.e. γ* sends every point in L_1^+ in its own causal past.

Remark 3.19. As a corollary we get the following description space-like HS-singularities of degree 2: consider a small disk U in dS^2 and a point x in U. Let r be one light-like geodesic ray contained in U issued from x, cut along it and glue back by a hyperbolic dS^2-isometry γ like described in Fig. 4 (be careful that in this figure, the isometry, glueing the future copy of r in the boundary of $U \setminus r$ into the past copy of r; hence γ is the inverse of the holonomy). Observe that one cannot match one side on the other, but the resulting space is still homeomorphic to the disk. The resulting HS-singularity is

2 2 0 1 3 1 8 B
Jour. No Ms. No.
Dispatch: 3/9/2011
Total pages: 54
Disk Received ☑
Disk Used ☑
Journal: Commun. Math. Phys.
Not Used ☐
Corrupted ☐
Mismatch ☐

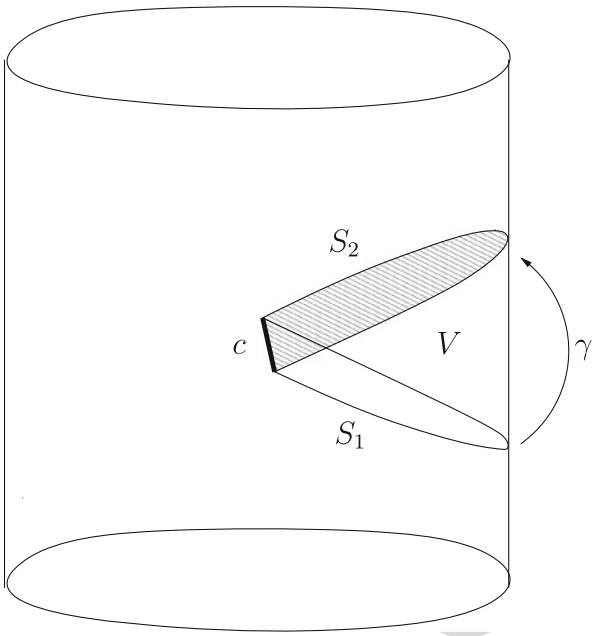

Fig. 3. The cylinder represents the boundary of the conformal model of AdS. If we remove the domain V and glue S_1 to S_2 we get a spacetime with one tachyon. If we keep V and glue S_1 to S_2, we obtain a spacetime with one Misner singular line

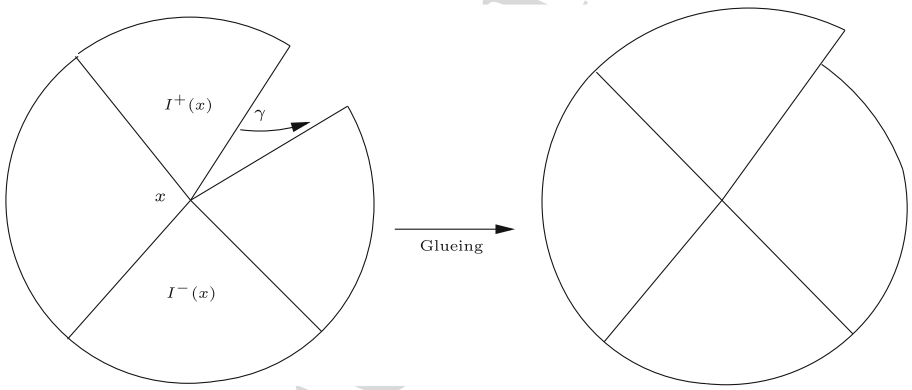

Fig. 4. Construction of a positive space-like singular line of degree 2

space-like, of degree 2. If r is future oriented, the singularity is positive if and only if for every y in r the image γy lies in the future of y. If r is past oriented, the singularity is positive if and only if γy lies in the past of y for every y in r.

Remark 3.20. As far as we know, this kind of singular line is not considered in physics literature. However, it is a very natural extension of the notion of massive particles.

2 2 0 1 3 1 8 B
Jour. No Ms. No.
Dispatch: 3/9/2011
Total pages: 54
Disk Received ☑
Disk Used ☑
Journal: Commun. Math. Phys.
Not Used ☐
Corrupted ☐
Mismatch ☐

It sounds to us natural to call these singularities, representing particles faster than light, *tachyons,* which can be positive or negative, depending on their influence on lightrays.

Remark 3.21. Space-like singularity of any (even) degree $2k$ can be constructed as k-branched cover of a space-like singularity of degree 2. In other words, they are obtained by identifying P_1 and P_2, but now seen as the boundaries of a wedge turning k times around c.

3.7.3. Misner singularities. Let S_1, S_2 be two space-like half-planes with common boundary as appearing in the second version of definition of tachyons in the previous section, with S_2 lying in the future of S_1. Now, instead of removing the intersection V between the future of S_1 and the past of S_2, keep it and remove the other part (the main part!) of $\widetilde{\mathrm{AdS}}_3$. Glue its two boundary components S_1, S_2 by an AdS-isometry fixing c pointwise. The reader will easily convince himself that the resulting spacetime contains a space-like line of degree 0, *i.e.* what we have called a Misner singular line (see Fig. 3).

The reason of this terminology is that this kind of singularity is often considered, or mentioned[2], in papers dedicated to gravity in dimension $2+1$, maybe most of the time in the Minkowski background, but also in the AdS background. They are attributed to Misner who considered the $3+1$-dimensional analog of this spacetime (for example, the glueing is called "Misner identification" in [DS93]; see also [GL98]).

3.7.4. BTZ-like singularities. Consider the same data (c, c_+, P_1, P_2) used for the description of tachyons, *i.e.* space-like singularities, but now remove D, and glue the boundaries P_1, P_2 of W by a hyperbolic element γ_0 fixing every point in c. The resulting space is a manifold $\mathcal{B}$ containing two singular lines, that we abusively still denote c and c_+, and is locally AdS_3 outside c, c_+ (see Fig. 2). Observe that every point of $\mathcal{B}$ lies in the past of the singular line corresponding to c_+ and in the future of the singular line corresponding to c. It follows easily that c is a BTZ-like past singularity, and that c_+ is a BTZ-like future singularity.

Remark 3.22. Let E be the open domain in $\widetilde{\mathrm{AdS}}_3$, intersection between the future of c and the past of c_+. Observe that $\overline{W} \setminus P_1$ is a fundamental domain for the action on E of the group $\langle\gamma_0\rangle$ generated by γ_0. In other words, the regular part of $\mathcal{B}$ is isometric to the quotient $E/\langle\gamma_0\rangle$. This quotient is precisely a *static BTZ black-hole* as first introduced by Bañados, Teitelboim and Zanelli in [BTZ92] (see also [Bar08a, Bar08b]). It is homeomorphic to the product of the annulus by the real line. The singular spacetime $\mathcal{B}$ is obtained by adjoining to this BTZ black-hole two singular lines: this follows that $\mathcal{B}$ is homeomorphic to the product of a 2-sphere with the real line in which c_+ and c can be naturally considered respectively as the future singularity and the past singularity. This is the explanation of the "BTZ-like" terminology. More details will be given in Sect. 7.3.

Remark 3.23. This kind of singularity appears in several papers in the physics literature. We point out among them the excellent paper [HM99] where Gott's construction quoted above is adapted to the AdS case, and where a complete and very subtle description of singular AdS-spacetimes interpreted as the creation of a BTZ black-hole by a pair of light-like particles, or by a pair of massive particles is provided. In our terminology, these spacetimes contains three singularities: a pair of light-like or time-like positive singular lines, and a BTZ-like future singularity. These examples show that even if all

[2] Essentially because of their main feature pointed out in Sect. 3.6: they are surrounded by CTC.

the singular lines are causal, in the sense of Definition 3.16, a singular spacetime may exhibit big CCC due to a more global phenomenon.

3.7.5. Light-like and extreme BTZ-like singularities. The definition of a light-like singularity is similar to that of space-like singularities of degree 2 (tachyons), but starts with the choice of a *light-like* geodesic c in $\widetilde{\mathrm{AdS}}_3$. Given such a geodesic, we consider another light-like geodesic c_+ in the future of c, and two disjoint time-like totally geodesic annuli P_1, P_2 with boundary $c \cup c_+$.

More precisely, consider pairs of space-like geodesics (c^n, c^n_+) as those appearing in the description of tachyons, contained in time-like planes Q^n_1, Q^n_2, so that c^n converge to the light-like geodesic c. Then, c^n_+ converge to a light-like geodesic c_+, whose past extremity in the boundary of $\widetilde{\mathrm{AdS}}_3$ coincide with the future extremity of c. The time-like planes Q^n_1, Q^n_2 converge to time-like planes Q_1, Q_2 containing c and c_+. Then P_i is the annulus bounded in Q_i by c and c_+. Glue the boundaries P_1 and P_2 of the component D of $\widetilde{\mathrm{AdS}}_3 \setminus (P_1 \cup P_2)$ contained in the future of c by an isometry of $\widetilde{\mathrm{AdS}}_3$ fixing every point in c (and in c_+): the resulting space is a singular AdS-spacetime, containing two singular lines, abusely denoted by c, c_+. As in the case of tachyons, we can see that these singular lines have degree 2, but they are light-like instead of space-like. The line c is called *positive,* and c_+ is *negative.*

Similarly to what happens for tachyons, there is an alternative way to construct light-like singularities: let L be one of the two light-like half-planes bounded by c. Cut $\widetilde{\mathrm{AdS}}_3$ along L, and glue back by an isometry γ fixing pointwise c: the result is a singular spacetime containing a light-like singularity of degree 2.

Finally, extreme BTZ-like singularities can be described in a way similar to what we have done for (non extreme) BTZ-like singularities. As a matter of fact, when we glue the wedge W between P_1 and P_2 we obtain a (static) extreme BTZ black-hole as described in [BTZ92] (see also [Bar08b, Sect. 3.2, Sect. 10.3]). Further comments and details are left to the reader.

Remark 3.24. Light-like singularities of degree 2 appear very frequently in physics, where they are called wordlines, or cosmic strings, of massless particles, or even sometimes "photons" ([DS93]).

Remark 3.25. As in the case of tachyons (see Remark 3.21) one can construct light-like singularities of any degree $2k$ by considering a wedge turning k times around c before glueing its boundaries.

Remark 3.26. A study similar to what has been done in Remark 3.18 shows that positive photons attract lightrays, whereas negative photons have a repelling behavior.

Remark 3.27. However, there is no positive/negative dichotomy for BTZ-like singularities, extreme or not.

Remark 3.28. From now on, we allow ourselves to qualify HS-singularities according to the nature of the associated AdS-singular lines: an elliptic HS-singularity is a (massive) particle, a space-like singularity is a tachyon, positive or negative, etc...

Remark 3.29. Let $[p_1, p_2]$ be an oriented arc in $\partial\mathbb{H}^2_+$, and for every x in $\mathbb{H}^2_+$ consider the elliptic singularity (with positive mass) obtained by removing the wedge composed of geodesic rays issued from x and with extremity in $[p_1, p_2]$, and glueing back by an

2 2 0 1 3 1 8 B
Jour. No Ms. No.
Dispatch: 3/9/2011
Total pages: 54
Disk Received ☑
Disk Used ☑
Journal: Commun. Math. Phys.
Not Used ☐
Corrupted ☐
Mismatch ☐

elliptic isometry. Move x until it reaches a point x_∞ in $\partial\mathbb{H}^2 \setminus [p_1, p_2]$. It provides a continuous deformation of an elliptic singularity to a light-like singularity, which can be continued further into dS^2 by a continuous sequence of space-like singularities. Observe that the light-like (resp. space-like) singularities appearing in this continuous family are positive (resp. have positive mass).

3.8. Positive HS-surfaces. Among singular lines, i.e. "particles", we can distinguish the ones having an attracting behavior on lightrays (see Remark 3.17, 3.18, 3.26):

Definition 3.30. *A HS-surface, an interaction or a singular line is* **positive** *if all space-like and light-like singularities of degree ≥ 2 therein are positive, and if all time-like singularities have a cone angle less than 2π.*

4. Particle Interactions and Convex Polyhedra

This short section briefly describes a relationship between interactions of particles in 3-dimensional AdS manifolds, HS-structure on the sphere, and convex polyhedra in HS^3, the natural extension of the hyperbolic 3-dimensional by the de Sitter space.

Convex polyhedra in HS^3 provide a convenient way to visualize a large variety of particle interactions in AdS manifolds (or more generally in Lorentzian 3-manifolds). This section should provide the reader with a wealth of examples of particle interactions – obtained from convex polyhedra in HS^3 – exhibiting various interesting behaviors. It should then be easier to follow the classification of positive causal *HS*-surfaces in the next section.

The relationship between convex polyhedra and particle interactions might however be deeper than just a convenient way to construct examples. It appears that many, and possibly all, particle interactions in an AdS manifold satisfying some natural conditions correspond to a unique convex polyhedron in HS^3. This deeper aspect of the relationship between particle interactions and convex polyhedra is described in Sect. 4.5 only in a special case: interactions between only massive particles and tachyons. It appears likely that it extends to a more general context, however it appears preferable to restrict those considerations here to a special case which, although already exhibiting interesting phenomena, avoids the technical complications of the general case.

4.1. The space HS^3. The definition used above for HS^2 can be extended as it is to higher dimensions. So HS^3 is the space of geodesic rays starting from 0 in the four-dimensional Minkowski space $\mathbb{R}^{3,1}$. It admits a natural action of $SO_0(1,3)$, and has a decomposition in 5 components:

- The "upper" and "lower" hyperbolic components, denoted by H^3_+ and H^3_-, corresponding to the future-oriented and past-oriented time-like rays. On those two components the angle between geodesic rays corresponds to the hyperbolic metric on H^3.
- The domain dS_3 composed of space-like geodesic rays.
- The two spheres ∂H^3_+ and ∂H^3_- which are the boundaries of H^3_+ and H^3_-, respectively. We call Q their union.

There is a natural projective model of HS^3 in the double cover of $\mathbb{RP}^3$ – we have to use the double cover because HS^3 is defined as a space of geodesic rays, rather than as a

2 2 0 1 3 1 8 B
Jour. No Ms. No.
Dispatch: 3/9/2011
Total pages: 54
Disk Received ☑
Disk Used ☑
Journal: Commun. Math. Phys.
Not Used ☐
Corrupted ☐
Mismatch ☐

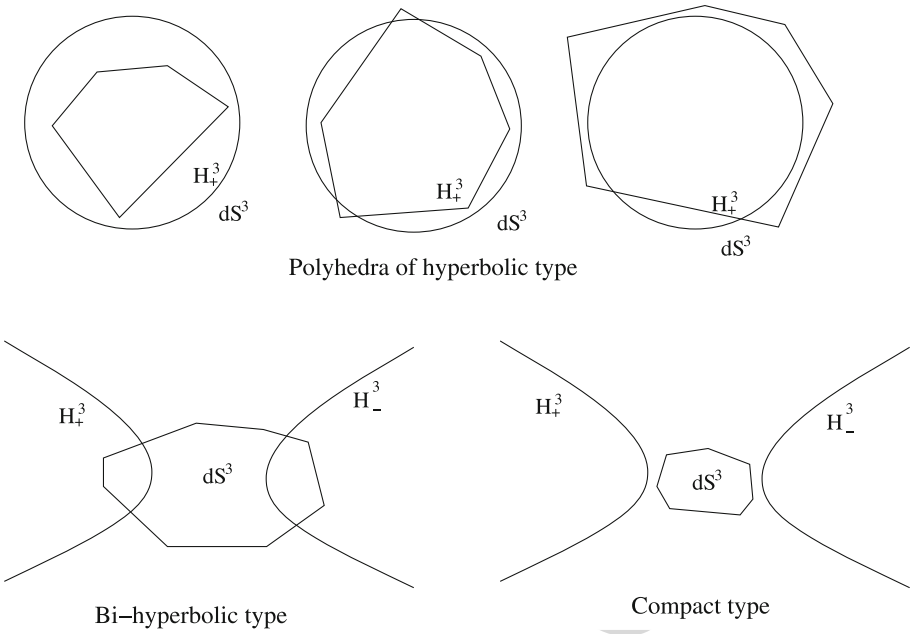

Fig. 5. Three types of polyhedra in HS^3

space of geodesics containing 0. This model has the key feature that the connected components of the intersections of the projective lines with the de Sitter/hyperbolic regions correspond to the geodesics of the de Sitter/hyperbolic regions.

Note that there is a danger of confusion with the notations used in [Sch98], since the space which we call HS^3 here is denoted by $\tilde{HS}^3$ there, while the space HS^3 in [Sch98] is the quotient of the space HS^3 considered here by the antipodal action of $\mathbb{Z}/2\mathbb{Z}$.

4.2. Convex polyhedra in HS^3. In all this section we consider convex polyhedra in HS^3 but will always suppose that they do not have any vertex on Q. We now consider such a polyhedron, calling it P.

The geometry induced on the boundary of P depends on its position relative to the two hyperbolic components of HS^3, and we can distinguish three types of polyhedra (Fig. 5).

- polyhedra of *hyperbolic* type intersect one of the hyperbolic components of HS^3, but not the other. We find for instance in this group:
  - the usual, compact hyperbolic polyhedra, entirely contained in one of the hyperbolic components of HS^3,
  - the ideal or hyperideal hyperbolic polyhedra,
  - the duals of compact hyperbolic polyhedra, which contain one of the hyperbolic components of HS^3 in their interior.
- polyhedra of *bi-hyperbolic* type intersect both hyperbolic components of HS^3,
- polyhedra of *compact* type are contained in the de Sitter component of HS^3.

The terminology used here is taken from [Sch01].

We will see below that polyhedra of bi-hyperbolic type play the simplest role in relation to particle interactions: they are always related to the simpler interactions involving only massive particles and tachyons. Those of hyperbolic type are (sometimes) related to particle interactions involving a BTZ-type singularity. Polyhedra of compact type are the most exotic when considered in relation to particle interactions and will not be considered much here, for reasons which should appear clearly below.

4.3. Induced HS-structures on the boundary of a polyhedron. We now consider the geometric structure induced on the boundary of a convex polyhedron in HS^3. Those geometric structures have been studied in [Sch98,Sch01], and we will partly rely on those references, while trying to make the current section as self-contained as possible. Note however that the notion of *HS metric* used in [Sch98,Sch01] is more general than the notion of *HS*-structure considered here.

In fact the geometric structure induced on the boundary of a convex polyhedron $P \subset \mathrm{HS}^3$ is an *HS*-structure in some, but not all, cases, and the different types of polyhedra behave differently in this respect.

4.3.1. Polyhedra of bi-hyperbolic type. This is the simplest situation: the induced geometric structure is *always* a causal positive singular *HS*-structure.

The geometry of the induced geometric structure on those polyhedra is described in [Sch01], under the condition that there there is no vertex on the boundary at infinity of the two hyperbolic components of HS^3. The boundary of P can be decomposed in three components:

- A "future" hyperbolic disk $D_+ := \partial P \cap H^3_+$, on which the induced metric is hyperbolic (with cone singularities at the vertices) and complete.
- A "past" hyperbolic disk $D_- = \partial P \cap H^3_-$, similarly with a complete hyperbolic metric.
- A de Sitter annulus, also with cone singularities at the vertices of P.

In other terms, ∂P is endowed with an *HS*-structure. Moreover all vertices in the de Sitter part of the *HS*-structure have degree 2.

A key point is that the convexity of P implies directly that this *HS*-structure is positive: the cone angles are less than 2π at the hyperbolic vertices of P, while the positivity condition is also satisfied at the de Sitter vertices. This can be checked by elementary geometric arguments or can be found in [Sch01, Def. 3.1 and Thm. 1.3].

4.3.2. Polyhedra of hyperbolic type. In this case the induced geometric structure is *sometimes* a causal positive *HS*-structure. The geometric structure on those polyhedra is described in [Sch98], again when P has no vertex on $\partial H^3_+ \cup \partial H^3_-$.

Figure 6 shows on the left an example of polyhedron of hyperbolic type for which the induced geometric structure is not an *HS*-structure, since the upper face (in gray) is a space-like face in the de Sitter part of HS^3, so that it is not modelled on HS^2.

The induced geometric structure on the boundary of the polyhedron shown on the right, however, is a positive causal *HS*-structure. At the upper and lower vertices, this *HS*-structure has degree 0. The three "middle" vertices are contained in the hyperbolic part of the *HS*-structure, and the positivity of the *HS*-structure at those vertices follows from the convexity of the polyhedron.

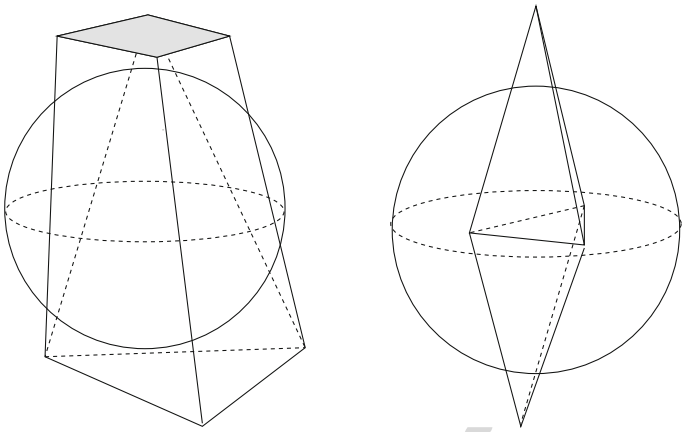

Fig. 6. Two polyhedra of hyperbolic type

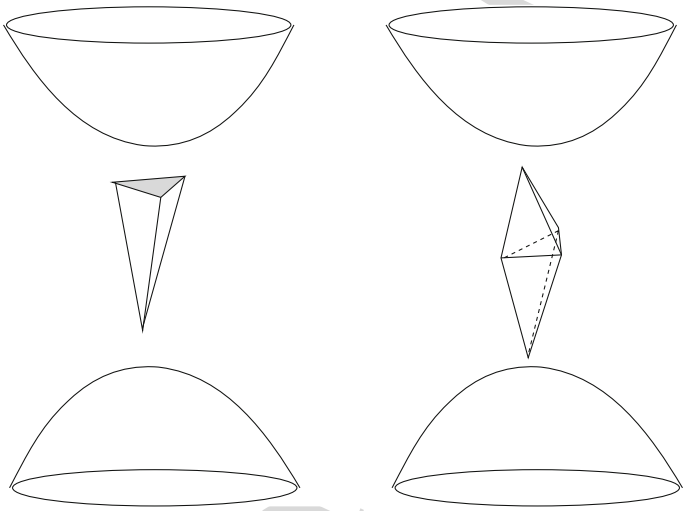

Fig. 7. Two polyhedra of compact type

4.3.3. Polyhedra of compact type. In this case too, the induced geometric structure is also *sometimes* a causal *HS*-structure.

On the left side of Fig. 7 we find an example of a polyhedron of compact type on which the induced geometric structure is not an *HS*-structure – the upper face, in gray, is a space-like face in the de Sitter component of HS^3. On the right side, the geometric structure on the boundary of the polyhedron is a positive causal *HS*-structure. All faces are time-like faces, so that they are modelled on HS^2. The upper and lower vertices have degree 0, while the three "middle" vertices have degree 2, and the positivity of the *HS*-structure at those points follows from the convexity of the polyhedron (see [Sch01]).

4.4. From a convex polyhedron to a particle interaction. When a convex polyhedron has on its boundary an induced positive causal *HS*-structure, it is possible to consider the interaction corresponding to this *HS*-structure.

This interaction can be constructed from the *HS*-structure by a warped product metric construction. It can also be obtained as in Sect. 2, by noting that each open subset of the regular part of the *HS*-structure corresponds to a cone in AdS_3, and that those cones can be glued in a way corresponding to the gluing of the corresponding domains in the *HS*-structure.

The different types of polyhedra – in particular the examples in Fig. 7 and Fig. 6 – correspond to different types of interactions.

4.4.1. Polyhedra of bi-hyperbolic type. For those polyhedra the hyperbolic vertices in H^3_+ (resp. H^3_-) correspond to massive particles leaving from (resp. arriving at) the interaction. The de Sitter vertices, at which the induced *HS*-structure has degree 2, correspond to tachyons.

4.4.2. Polyhedra of hyperbolic type. In the example on the right of Fig. 6, the upper and lower vertices correspond, through the definitions in Sect. 3, to two future BTZ-type singularities (or two past BTZ-type singularities, depending on the time orientation). The three middle vertices correspond to massive particles. The interaction corresponding to this polyhedron therefore involves two future (resp. past) BTZ-type singularities and three massive particles.

The interactions corresponding to polyhedra of hyperbolic type can be more complex, in particular because the topology of the intersection of the boundary of a convex polyhedron with the de Sitter part of HS^3 could be a sphere with an arbitrary number of disks removed. Those interactions can involve future BTZ-type singularities and massive particles, but also tachyons.

4.4.3. Polyhedra of compact type. The interaction corresponding to the polyhedron at the right of Fig. 7 is even more exotic. The upper vertex corresponds to a future BTZ-type singularity, the lower to a past BTZ-type singularity, and the three middle vertices correspond to tachyons. The interaction therefore involves a future BTZ-type singularity, a past BTZ-type singularity, and three tachyons.

4.5. From a particle interaction to a convex polyhedron. This section describes, in a restricted setting, a converse to the construction of an interaction from a convex polyhedron in HS^3. We show below that, under an additional condition which seems to be physically relevant, an interaction can always be obtained from a convex polyhedron in HS^3. Using the relation described in Sect. 2 between interactions and positive causal *HS*-structures, we will relate convex polyhedra to those *HS*-structures rather than directly to interactions.

This converse relation is described here only for simple interactions involving massive particles and tachyons.

4.5.1. A positive mass condition. The additional condition appearing in the converse relation is natural in view of the following remark.

Remark 4.1. Let M be a singular AdS manifold, c be a cone singularity along a time-like curve, with positive mass (angle less than 2π). Let $x \in c$ and let L_x be the link of M at x, and let γ be a simple closed space-like geodesic in the de Sitter part of L_x. Then the length of γ is less than 2π.

2 2 0 1 3 1 8 B
Jour. No Ms. No.
Dispatch: 3/9/2011
Total pages: 54
Disk Received ☑
Disk Used ☑
Journal: Commun. Math. Phys.
Not Used ☐
Corrupted ☐
Mismatch ☐

Proof. An explicit description of L_x follows from the construction of the AdS metric in the neighborhood of a time-like singularity, as seen in Sect. 2. The de Sitter part of this link contains a unique simple closed geodesic, and its length is equal to the angle at the singularity. So it is less than 2π.

In the sequel we consider a singular *HS*-structure σ on S^2, which is the link of an interaction involving massive particles and tachyons. This means that σ is positive and causal, and moreover:

- it has two hyperbolic components, D_- and D_+, on which σ restricts to a complete hyperbolic metric with cone singularities,
- any future-oriented inextendible time-like line in the de Sitter region of σ connects the closure of D_- to the closure of D_+.

Definition 4.2. *σ has* **positive mass** *if any simple closed space-like geodesic in the de Sitter part of (S^2, σ) has length less than 2π.*

This notion of positivity of mass for an interaction generalizes the natural notion of positivity for time-like singularities.

4.5.2. A convex polyhedron from simpler interactions.

Theorem 4.3. *Let σ be a positive causal HS-structure on S^2, such that*

- *it has two hyperbolic components, D_- and D_+, on which σ restricts to a complete hyperbolic metric with cone singularities,*
- *any future-oriented inextendible time-like line in the de Sitter region of σ connects the closure of D_- to the closure of D_+.*

Then σ is induced on a convex polyhedron in HS^3 *if and only if it has positive mass. If so, this polyhedron is unique, and it is of bi-hyperbolic type.*

Proof. This is a direct translation of [Sch01, Thm. 1.3] (see in particular case D.2). □

The previous theorem is strongly related to classical statements on the induced metrics on convex polyhedra in the hyperbolic space, see [Ale05].

4.5.3. More general interactions/polyhedra. As mentioned above we believe that Theorem 4.3 might be extended to wider situations. This could be based on the statements on the induced geometric structures on the boundaries of convex polyhedra in HS^3, as studied in [Sch98, Sch01].

5. Classification of Positive Causal HS-Surfaces

In all this section Σ denotes a closed (compact without boundary) connected positive causal HS-surface. It decomposes in three regions:

- *Photons:* a photon is a point corresponding in every HS-chart to points in $\partial\mathbb{H}^2_\pm$. Observe that a photon might be singular, *i.e.* corresponds to a light-like singularity (a lightlike singularity of degree one, a cuspidal singularity, or an extreme BTZ-like singularity). The set of photons, denoted $\mathcal{P}(\Sigma)$, or simply $\mathcal{P}$ in the non-ambiguous situations, is the disjoint union of a finite number of isolated points (extreme BTZ-like singularities or cuspidal singularities) and of a compact embedded one dimensional manifold, *i.e.* a finite union of circles.

2 2 0 1 3 1 8 B
Jour. No Ms. No.
Dispatch: 3/9/2011
Total pages: 54
Disk Received ☑
Disk Used ☑
Journal: Commun. Math. Phys.
Not Used ☐
Corrupted ☐
Mismatch ☐

- *Hyperbolic regions:* They are the connected components of the open subset $\mathbb{H}^2(\Sigma)$ of Σ corresponding to the time-like regions $\mathbb{H}^2_\perp$ of HS^2. They are naturally hyperbolic surfaces with cone singularities. There are two types of hyperbolic regions: the future and the past ones. The boundary of every hyperbolic region is a finite union of circles of photons and of cuspidal (parabolic) singularities.
- *De Sitter regions:* They are the connected components of the open subset $\mathrm{dS}^2(\Sigma)$ of Σ corresponding to the time-like regions dS^2 of HS^2. Alternatively, they are the connected components of $\Sigma \setminus \mathcal{P}$ that are not hyperbolic regions. Every de Sitter region is a singular dS surface, whose closure is compact and with boundary made of circles of photons and of a finite number of extreme parabolic singularities.

5.1. Photons. Let C be a circle of photons. It admits two natural $\mathbb{RP}^1$-structures, which may not coincide if C contains light-like singularities.

Consider a closed annulus A in Σ containing C so that all HS-singularities in A lie in C. Consider first the hyperbolic side, *i.e.* the component A_H of $A \setminus C$ comprising time-like elements. Reducing A if necessary we can assume that A_H is contained in one hyperbolic region. Then every path starting from a point in C has infinite length in A_H, and conversely every complete geodesic ray in A_H accumulates on an unique point in C. In other words, C is the conformal boundary at ∞ of A_H. Since the conformal boundary of $\mathbb{H}^2$ is naturally $\mathbb{RP}^1$ and that hyperbolic isometries are restrictions of real projective transformations, C inherits, as a conformal boundary of A_H, a $\mathbb{RP}^1$-structure that we call *$\mathbb{RP}^1$-structure on C from the hyperbolic side.*

Consider now the component A_S in the de Sitter region adjacent to C. It is is foliated by the light-like lines. Actually, there are two such foliations (for more details, see 5.3 below). An adequate selection of this annulus ensures that the leaf space of each of these foliations is homeomorphic to the circle - actually, there is a natural identification between this leaf space and C: the map associating to a leaf its extremity. These foliations are transversely projective: hence they induce a $\mathbb{RP}^1$-structure on C.

This structure is the same for both foliations, we call it *$\mathbb{RP}^1$-structure on C from the de Sitter side.* In order to sustain this claim, we refer to [Mes07, § 6]: first observe that C can be slightly pushed inside A_S onto a space-like simple closed curve (take a loop around C following alternatively past oriented light-like segments in leaves of one of the foliations, and future oriented segments in the other foliation; and smooth it). Then apply [Mes07, Prop. 17].

If C contains no light-like singularity, the $\mathbb{RP}^1$-structures from the hyperbolic and de Sitter sides coincide. But it is not necessarily true if C contains light-like singularities. Actually, the holonomy from one side is obtained by composing the holonomy from the other side by parabolic elements, one for each light-like singularity in C. Observe that in general even the degrees may not coincide.

5.2. Hyperbolic regions. Every component of the hyperbolic region has a compact closure in Σ. It follows easily that every hyperbolic region is a complete hyperbolic surface with cone singularities (corresponding to massive particles) and cusps (corresponding to cuspidal singularities) and that is of finite type, *i.e.* homeomorphic to a compact surface without boundary with a finite set of points removed.

Proposition 5.1. *Let C be a circle of photons in Σ, and H the hyperbolic region adjacent to C. Let $\bar{H}$ be the open domain in Σ comprising H and all cuspidal singularities contained in the closure of H. Assume that $\bar{H}$ is not homeomorphic to the disk. Then, as a $\mathbb{RP}^1$-circle defined by the hyperbolic side, the circle C is hyperbolic of degree* 0.

2 2 0 1 3 1 8 B
Jour. No Ms. No.
Dispatch: 3/9/2011
Total pages: 54
Disk Received ☑
Disk Used ☑
Journal: Commun. Math. Phys.
Not Used ☐
Corrupted ☐
Mismatch ☐

Proof. The proposition will be proved if we find an annulus in H containing no singularity and bounded by C and a simple closed geodesic in H. Indeed, the holonomy of the $\mathbb{RP}^1$-structure of C coincides then with the holonomy of the $\mathbb{RP}^1$-structure of the closed geodesic, and it is well-known that closed geodesics in hyperbolic surfaces are hyperbolic. Further details are left to the reader.

Since we assume that $\bar{H}$ is not a disk, C represents a non-trivial free homotopy class in H. Consider absolutely continuous simple loops in H freely homotopic to C in $H \cup C$. Let L be the length of one of them. There are two compact subsets $K \subset K' \subset \bar{H}$ such that every loop of length $\leq 2L$ containing a point in the complement of K' stays outside K and is homotopically trivial. It follows that every loop freely homotopic to C of length $\leq L$ lies in K': by Ascoli and semi-continuity of the length, one of them has minimal length l_0 (we also use the fact that C is not freely homotopic to a small closed loop around a cusp of H, details are left to the reader). It is obviously simple, and it contains no singular point, since every path containing a singularity can be shortened (observe that since Σ is positive, cone angles of hyperbolic singular points are less than 2π). Hence it is a closed geodesic.

There could be several such closed simple geodesics of minimal length, but they are two-by-two disjoint, and the annulus bounded by two such minimal closed geodesics must contain at least one singularity since there is no closed hyperbolic annulus bounded by geodesics. Hence, there is only a finite number of such minimal geodesics, and for one of them, c_0, the annulus A_0 bounded by C and c_0 contains no other minimal closed geodesic.

If A_0 contains no singularity, the proposition is proved. If not, for every $r > 0$, let $A(r)$ be the set of points in A_0 at distance $< r$ from c_0, and let $A'(r)$ be the complement of $A(r)$ in A_0. For small values of r, $A(r)$ contains no singularity. Thus, it is isometric to the similar annulus in the unique hyperbolic annulus containing a geodesic loop of length l_0. This remark holds as long as $A(r)$ is regular. Denote by $l(r)$ the length of the boundary $c(r)$ of $A(r)$.

Let R be the supremum of positive real numbers r_0 such that for every $r < r_0$ every essential loop in $A'(r)$ has length $\geq l(r)$. Since A_0 contains no closed geodesic of length $\leq l_0$, this supremum is positive. On the other hand, let r_1 be the distance between c_0 and the singularity x_1 in A_0 nearest to c_0.

We claim that $r_1 > R$. Indeed: near x_1 the surface is isometric to a hyperbolic disk D centered at x_1 with a wedge between two geodesic rays l_1, l_2 issued from x_1 of angle 2θ removed. Let Δ be the geodesic ray issued from x_1 made of points at equal distance from l_1 and from l_2. Assume by contradiction $r_1 \leq R$. Then, $c(r_1)$ is a simple loop, containing x_1 and minimizing the length of loops inside the closure of $A'(r_1)$. Singularities of cone angle $2\pi - 2\theta < \pi$ cannot be approached by length minimizing closed loops, hence $\theta \leq \pi/2$. Moreover, we can assume without loss of generality that $c(r)$ near x_1 is the projection of a C^1-curve $\hat{c}$ in D orthogonal to Δ at x_1, and such that the removed wedge between l_1, l_2, and the part of D projecting into $A(r)$ are on opposite sides of this curve. For every $\epsilon > 0$, let y_1^ϵ, y_2^ϵ be the points at distance ϵ from x_1 in respectively l_1, l_2. Consider the geodesic Δ_i^ϵ at equal distance from y_i^ϵ and x_1 ($i = 1, 2$): it is orthogonal to l_i, hence not tangent to $\hat{c}$. It follows that, for ϵ small enough, $\hat{c}$ contains a point p_i closer to y_i^ϵ than to x_1. Hence, $c(r_1)$ can be shortened by replacing the part between p_1 and p_2 by the union of the projections of the geodesics $[p_i, y_i^\epsilon]$. This shorter curve is contained in $A'(r_1)$: contradiction.

Hence $R < r_1$. In particular, R is finite. For ϵ small enough, the annulus $A'(R + \epsilon)$ contains an essential loop c_ϵ of minimal length $< l(R + \epsilon)$. Since it lies in $A'(R)$, this

2 2 0 1 3 1 8 B
Jour. No Ms. No.
Dispatch: 3/9/2011
Total pages: 54
Disk Received ☑
Disk Used ☑
Journal: Commun. Math. Phys.
Not Used ☐
Corrupted ☐
Mismatch ☐

loop has length $\geq l(R)$. On the other hand, there is $\alpha > 0$ such that any essential loop in $A'(R+\epsilon)$ contained in the α-neighborhood of $c(R+\epsilon)$ has length $\geq l(R+\epsilon) > l(R)$. It follows that c_ϵ is disjoint from $c(R+\epsilon)$, and thus, is actually a geodesic loop.

The annulus A_ϵ bounded by c_ϵ and $c(R+\epsilon)$ cannot be regular: indeed, if it was, its union with $A(R+\epsilon)$ would be a regular hyperbolic annulus bounded by two closed geodesics. Therefore, A_ϵ contains a singularity. Let A_1 be the annulus bounded by C and c_ϵ: every essential loop inside A_1 has length $\geq l(R)$ (since it lies in $A'(R)$). It contains strictly less singularities than A_0. If we restart the process from this annulus, we obtain by induction an annulus bounded by C and a closed geodesic inside T with no singularity. □

5.3. De Sitter regions. Let T be a de Sitter region of Σ. We recall that Σ is assumed to be positive, *i.e.* that all non-time-like singularities of non-vanishing degree have degree 2 and are positive. This last feature will be essential in our study (cf. Remark 5.5).

Future oriented isotropic directions define two oriented line fields on the regular part of T, defining two oriented foliations. Since we assume that Σ is causal, space-like singularities have degree 2, and these foliations extend continuously on singularities (but not differentially) as regular oriented foliations. Besides, in the neighborhood of every BTZ-like singularity x, the leaves of each of these foliations spiral around x. They thus define two singular oriented foliations $\mathcal{F}_1$, $\mathcal{F}_2$, where the singularities are precisely the BTZ-like singularities, *i.e.* hyperbolic time-like ones, and have degree +1. By Poincaré-Hopf index formula we immediately get:

Corollary 5.2. *Every de Sitter region is homeomorphic to the annulus, the disk or the sphere. Moreover, it contains at most two BTZ-like singularities. If it contains two such singularities, it is homeomorphic to the 2-sphere, and if it contains exactly one BTZ-like singularity, it is homeomorphic to the disk.*

Let $c : \mathbb{R} \to L$ be a parametrization of a leaf L of $\mathcal{F}_i$, increasing with respect to the time orientation. Recall that the α-limit set (respectively ω-limit set) is the set of points in T which are limits of a sequence $(c(t_n))_{(n\in\mathbb{N})}$, where $(t_n)_{(n\in\mathbb{N})}$ is a decreasing (respectively an increasing) sequence of real numbers. By assumption, T contains no CCC. Hence, according to the Poincaré-Bendixson Theorem:

Corollary 5.3. *For every leaf L of $\mathcal{F}_1$ or $\mathcal{F}_2$, oriented by its time orientation, the α-limit set (resp. ω-limit set) of L is either empty or a past (resp. future) BTZ-like singularity. Moreover, if the α-limit set (resp. ω-limit set) is empty, the leaf accumulates in the past (resp. future) direction to a past (resp. future) boundary component of T that is a point in a circle of photons, or a extreme BTZ-like singularity.*

Proposition 5.4. *Let Σ be a positive, causal singular HS-surface. Let T be a de Sitter component of Σ adjacent to a hyperbolic region H along a circle of photons C. If the completion $\bar{H}$ of H is not homeomorphic to the disk, then either T is a disk containing exactly one BTZ-like singularity, or the boundary of T in Σ is the disjoint union of C and one extreme BTZ-like singularity.*

Proof. If T is a disk, we are done. Hence we can assume that T is homeomorphic to the annulus. Reversing the time if necessary we also can assume that H is a past hyperbolic component. Let C' be the other connected boundary component of T, *i.e.* its future boundary. If C' is an extreme BTZ-like singularity, the proposition is proved. Hence we are reduced to the case where C' is a circle of photons.

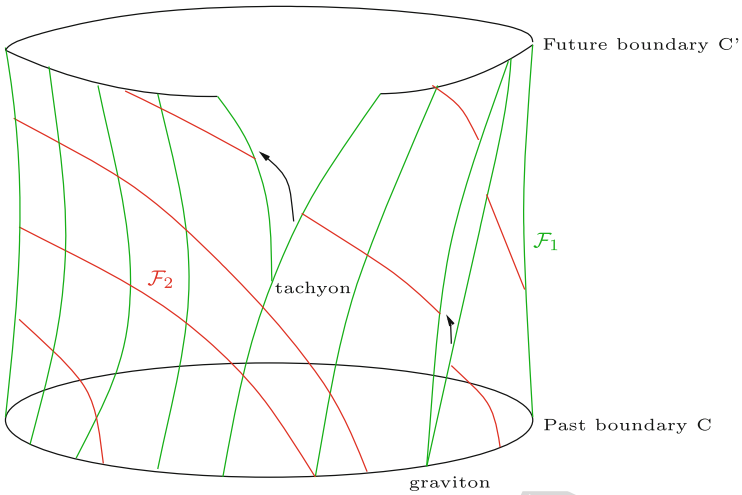

Fig. 8. Regularization of a tachyon and a light-like singularity

According to Corollary 5.3 every leaf of $\mathcal{F}_1$ or $\mathcal{F}_2$ is a closed line joining the two boundary components of T. For every singularity x in T, or every light-like singularity in C, let L_x be the future oriented half-leaf of $\mathcal{F}_1$ emerging from x. Assume that L_x does not contain any other singularity. Cut along L_x: we obtain a singular dS^2-surface T^* admitting in its boundary two copies of L_x. Since L_x accumulates to a point in C' it develops in dS^2 into a geodesic ray touching $\partial\mathbb{H}^2$. In particular, we can glue the two copies of L_x in the boundary of T^* by an isometry fixing their common point x. For the appropriate choice of this glueing map, we obtain a new dS^2-spacetime where x has been replaced by a regular point: we call this process, well defined, *regularization at x* (see Fig. 8).

After a finite number of regularizations, we obtain a regular dS^2-spacetime T' (in particular, if a given leaf of $\mathcal{F}_1$ initially contains several singularities, they are eliminated during the process one after the other). Moreover, all these surgeries can actually be performed on $T \cup C \cup H$: the de Sitter annulus A' can be glued to $H \cup C$, giving rise to a HS-surface containing the circle of photons C disconnecting the hyperbolic region H from the regular de Sitter region T' (however, the other boundary component C' has been modified and does not match anymore the other hyperbolic region adjacent to T). Moreover, the circle of photons C now contains no light-like singularity, hence its $\mathbb{RP}^1$-structure from the de Sitter side coincides with the $\mathbb{RP}^1$-structure from the hyperbolic side. According to Proposition 5.1 this structure is hyperbolic of degree 0: it is the quotient of an interval I of $\mathbb{RP}^1$ by a hyperbolic element γ_0, with no fixed point inside I.

Denote by $\mathcal{F}'_1$, $\mathcal{F}'_2$ the isotropic foliations in T'. Since we performed the surgery along half-leaves of $\mathcal{F}_1$, leaves of $\mathcal{F}'_1$ are still closed in T'. Moreover, each of them accumulates at a unique point in C: the space of leaves of $\mathcal{F}'_1$ is identified with C. Let $\widetilde{T}'$ be the universal covering of T', and let $\widetilde{\mathcal{F}}'_1$ be the lifting of $\mathcal{F}_1$. Recall that dS^2 is naturally identified with $\mathbb{RP}^1 \times \mathbb{RP}^1 \setminus \mathfrak{D}$, where $\mathfrak{D}$ is the diagonal. The developing map $\mathcal{D} : \widetilde{T}' \to \mathbb{RP}^1 \times \mathbb{RP}^1 \setminus \mathfrak{D}$ maps every leaf of $\widetilde{\mathcal{F}}'_1$ into a fiber $\{*\} \times \mathbb{RP}^1$. Besides, as affine lines, they are complete affine lines, meaning that they still develop onto the entire geodesic $\{*\} \times (\mathbb{RP}^1 \setminus \{*\})$. It follows that $\mathcal{D}$ is a homeomorphism between $\widetilde{T}'$ and the

2 2 0 1 3 1 8 B
Jour. No Ms. No.
Dispatch: 3/9/2011
Total pages: 54
Disk Received ☑
Disk Used ☑
Journal: Commun. Math. Phys.
Not Used ☐
Corrupted ☐
Mismatch ☐

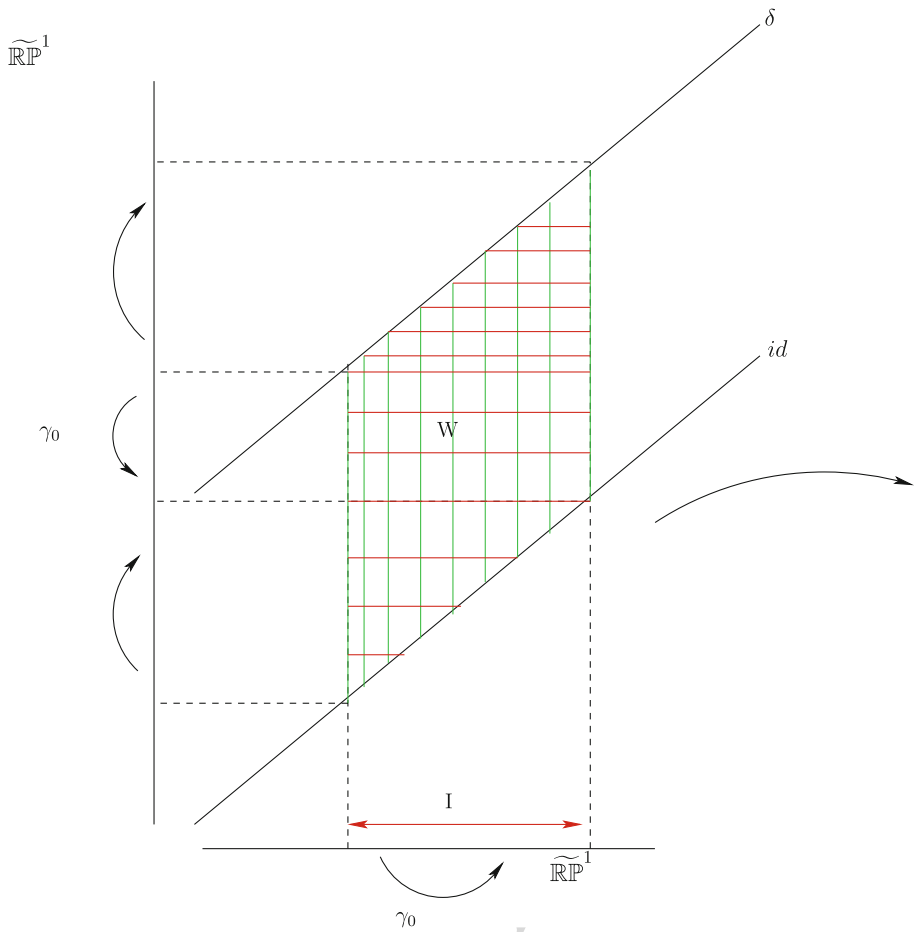

Fig. 9. The domain W and its quotient T'

open domain $W = I \times \mathbb{RP}^1 \setminus \mathfrak{D}$, *i.e.* the region in dS^2 bounded by two γ_0-invariant isotropic geodesics. Hence T' is isometric to the quotient of W by γ_0, which is well understood (see Fig. 9; it has been more convenient to draw the lift W in the region in $\widetilde{\mathbb{RP}}^1 \times \widetilde{\mathbb{RP}}^1$ between the graph of the identity map and the translation δ, a region which is isomorphic to the universal cover of $\mathbb{RP}^1 \times \mathbb{RP}^1 \setminus \mathfrak{D}$).

Hence the foliation $\mathcal{F}'_2$ admits two compact leaves. These leaves are CCC, but it is not yet in contradiction with the fact that Σ is causal, since the regularization might create such CCC.

The regularization procedure is invertible and T is obtained from T' by *positive* surgeries along future oriented half-leaves of $\mathcal{F}'_1$, *i.e.* obeying the rules described in Remark 3.19. We need to be more precise: pick a leaf L'_1 of $\mathcal{F}'_1$. It corresponds to a vertical line in W depicted in Fig. 9. We consider the first return f' map from L'_1 to L'_1 along future oriented leaves of $\mathcal{F}'_2$: it is defined on an interval $]-\infty, x_\infty[$ of L'_1, where $-\infty$ corresponds to the end of L'_1 accumulating on C. It admits two fixed points $x_1 < x_2 < x_\infty$, corresponding to the two compact leaves of $\mathcal{F}'_2$. The former is attracting

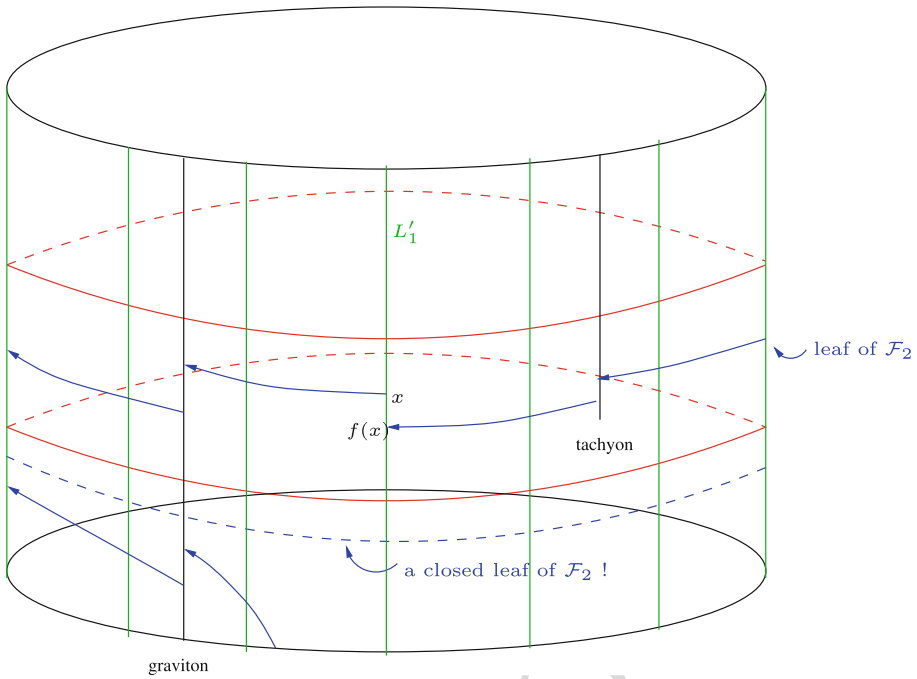

Fig. 10. First return maps. The identification maps along lines above time-like and light-like singularities compose the almost horizontal broken arcs which are contained in leaves of $\mathcal{F}_2$

and the latter is repelling. Let L_1 be a leaf of $\mathcal{F}_1$ corresponding, by the reverse surgery, to L_1'. We can assume without loss of generality that L_1 contains no singularity. Let f be the first return map from L_1 into itself along future oriented leaves of $\mathcal{F}_2$ (see Fig. 10). There is a natural identification between L_1 and L_1', and since all light-like singularities and tachyons in $T \cup C$ are positive, *the deviation of f with respect to f' is in the past direction, i.e.* for every x in $L_1 \approx L_1'$ we have $f(x) \leq f'(x)$ (it includes the case where x is not in the domain of definition of f, in which case, by convention, $f(x) = \infty$). In particular, $f(x_2) \leq x_2$. It follows that the future part of the oriented leaf of $\mathcal{F}_2$ through x_2 is trapped below its portion between x_2, $f(x_2)$. Since it is closed, and not compact, it must accumulate on C. But it is impossible since future oriented leaves near C exit from C, intersect a space-like loop, and cannot go back because of orientation considerations. The proposition is proved. □

Remark 5.5. In Proposition 5.4 the positivity hypothesis is necessary. Indeed, consider a regular HS-surface made of one annular past hyperbolic region connected to one annular future hyperbolic region by two de Sitter regions isometric to the region $T' = W/\langle\gamma_0\rangle$ appearing in the proof of Proposition 5.4. Pick up a photon x in the past boundary of one of these de Sitter components T, and let L be the leaf of $\mathcal{F}_1$ accumulating in the past to x. Then L accumulates in the future to a point y in the future boundary component. Cut along L, and glue back by a parabolic isometry fixing x and y. The main argument in the proof above is that if this surgery is performed in the positive way, so that x and y become positive tachyons, then the resulting spacetime still admits two CCC, leaves of the foliation $\mathcal{F}_2$. But if the surgery is performed in the negative way, with a sufficiently

big parabolic element, the closed leaves of $\mathcal{F}_2$ in T are destroyed, and every leaf of the new foliation $\mathcal{F}_2$ in the new singular surface joins the two boundary components of the de Sitter region, which is therefore causal.

Theorem 5.6. *Let Σ be a singular causal positive HS-surface, homeomorphic to the sphere. Then, it admits at most one past hyperbolic component, and at most one future hyperbolic component. Moreover, we are in one of the following mutually exclusive situations:*

(1) *Causally regular case: There is a unique de Sitter component, which is an annulus connecting one past hyperbolic region homeomorphic to the disk to a future hyperbolic region homeomorphic to the disk.*
(2) *Interaction of black holes or white holes: There is no past or no future hyperbolic region, and every de Sitter region is a either a disk containing a unique BTZ-like singularity, or a disk with an extreme BTZ-like singularity removed.*
(3) *Big Bang and Big Crunch: There is no de Sitter region, and only one hyperbolic region, which is a singular hyperbolic sphere - if the time-like region is a future one, the singularity is called a Big Bang; if the time-like region is a past one, the singularity is a Big Crunch.*
(4) *Interaction of a white hole with a black hole: There is no hyperbolic region. The surface Σ contains one past BTZ-like singularity and one future BTZ-like singularity - these singularities may be extreme or not.*

Remark 5.7. This theorem, despite the terminology inspired from cosmology, has no serious pretention of relevance for physics. However these appelations have the advantage to provide a reasonable intuition on the geometry of the interaction. For example, in what is called a Big Bang, the spacetime is entirely contained in the future of the singularity, and the singular lines can be seen as massive particles or "photons" emitted by the initial singularity.

Actually, it is one of few examples suggesting that the prescription of the surface Σ to be a sphere could be relaxed: whereas it seems hard to imagine that the spacetime could fail to be a manifold at a singular point describing a collision of particles, it is nevertheless not so hard, at least for us, to admit that the topology of the initial singularity may be more complicated, as it is the case in the regular case (see [ABB+07]).

Proof. If the future hyperbolic region and the past hyperbolic region is not empty, there must be a de Sitter annulus connecting one past hyperbolic component to a future hyperbolic component. By Proposition 5.4 these hyperbolic components are disks: we are in the causally regular case.

If there is no future hyperbolic region, but one past hyperbolic region, and at least one de Sitter region, then there cannot be any annular de Sitter component connecting two hyperbolic regions. Hence, the closure of each de Sitter component is a closed disk. It follows that there is only one past hyperbolic component: Σ is an interaction of black holes. Similarly, if there is a de Sitter region, a future hyperbolic region but no past hyperbolic region, Σ is an interaction of white holes.

The remaining situations are the cases where Σ has no de Sitter region, or no hyperbolic region. The former case corresponds obviously to the description (3) of Big Bang or Big Crunch , and the latter to the description (4) of an interaction between one black hole and one white hole. □

Remark 5.8. It is easy to construct singular hyperbolic spheres, *i.e.* Big Bang or Big Crunch: take for example the double of a hyperbolic triangle. The existence of interactions of a white hole with black hole is slightly less obvious. Consider the HS-surface

Σ_m associated to the BTZ black hole $\mathcal{B}_m$. It can be described as follows: take a point p in dS^2, let d_1, d_2 be the two projective circles in HS containing p, its opposite $-p$, and tangent to $\partial\mathbb{H}^2_\pm$. It decomposes HS^2 in four regions. One of these components, that we denote by U, contains the past hyperbolic region $\mathbb{H}^2_-$. Then, Σ_m is the quotient of U by the group generated by a hyperbolic isometry γ_0 fixing p, $-p$, d_1 and d_2. Let x_1, x_2 be the points where d_1, d_2 are tangent to $\partial\mathbb{H}^2_-$, and let I_1, I_2 be the connected components of $\partial\mathbb{H}^2_- \setminus \{x_1, x_2\}$. We select the index so that I_1 is the boundary of the de Sitter component T_1 of U containing p. Now let q be a point in T_1 so that the past of q in T_1 has a closure in U containing a fundamental domain J for the action of γ_0 on I_1. Then there are two time-like geodesic rays starting from q and accumulating at points in I_1 which are extremities of a subinterval containing J. These rays project in Σ_m onto two time-like geodesic rays l_1 and l_2 starting from the projection $\bar{q}$ of q. These rays admit a first intersection point $\bar{q}'$ in the past of $\bar{q}$. Let l'_1, l'_2 be the subintervalls in respectively l_1, l_2 with extremities $\bar{q}$, $\bar{q}'$: their union is a circle disconnecting the singular point $\bar{p}$ from the boundary of the de Sitter component. Remove the component of $\Sigma \setminus (l'_1 \cup l'_2)$ adjacent to this boundary. If $\bar{q}'$ is well-chosen, l'_1 and l'_2 have the same proper time. Then we can glue one to the other by a hyperbolic isometry. The resulting spacetime is as required an interaction between a BTZ black hole corresponding to $\bar{p}$ with a white hole corresponding to $\bar{q}'$ - it contains also a tachyon of positive mass corresponding to $\bar{q}$.

6. Global Hyperbolicity

In previous sections, we considered local properties of AdS manifolds with particles. We already observed in Sect. 3.6 that the usual notions of causality (causal curves, future, past, time functions...) available for regular Lorentzian manifolds still hold. In this section, we consider the global character of causal properties of AdS manifolds with particles. The main point presented here is that, as long as no interaction appears, global hyperbolicity is still a meaningful notion for singular AdS spacetimes. This notion will be necessary in Sect. 7, as well as in the continuation of this paper [BBS10] (see also the final part of [BBS09]).

The content of this section is presented in the AdS setting. We believe that most results could be extended to Minkowski or de Sitter singular manifolds.

In all this section M denotes a singular AdS manifold admitting as singularities only massive particles and no interaction. The regular part of M is denoted by M^*. Since we will consider other Lorentzian metrics on M, we need a denomination for the singular AdS metric : we denote it g_0.

6.1. Local coordinates near a singular line. Causality notions only depend on the conformal class of the metric, and AdS is conformally flat. Hence, AdS spacetimes and flat spacetimes share the same local causal properties. Every regular AdS spacetime admits an atlas for which local coordinates have the form (z, t), where z describes the unit disk D in the complex plane, t the interval $]-1, 1[$ and such that the AdS metric is conformal to:

$$-dt^2 + |dz|^2 \ .$$

For the singular case considered here, any point x lying on a singular line l (a massive particle of mass m), the same expression holds, but we have to remove a wedge

2 2 0 1 3 1 8 B
Jour. No Ms. No.
Dispatch: 3/9/2011
Total pages: 54
Disk Received ☑
Disk Used ☑
Journal: Commun. Math. Phys.
Not Used ☐
Corrupted ☐
Mismatch ☐

$\{2\alpha\pi < Arg(z) < 2\pi\}$ where $\alpha = 1 - m$ is positive, and to glue the two sides of this wedge. Consider the map $z \to \zeta = z^{1/\alpha}$: it sends the disk D with a wedge removed onto the entire disk, and is compatible with the glueing of the sides of the wedge. Hence, a convenient local coordinate system near x is (ζ, t) where (ζ, t) still lies in $D \times]-1, 1[$. The singular AdS metric is then, in these coordinates, conformal to

$$(1-m)^2 \frac{|d\zeta|^2}{|\zeta|^{2m}} - dt^2 \ .$$

In these coordinates, future oriented causal curves can be parametrized by the time coordinate t, and satisfies

$$\frac{\left|\zeta'(t)\right|}{|\zeta|^m} \leq \frac{1}{1-m} \ .$$

Observe that all these local coordinates define a differentiable atlas on the topological manifold M for which the AdS metric on the regular part is smooth.

6.2. Achronal surfaces. Usual definitions in regular Lorentzian manifolds still apply to the singular AdS spacetime M:

Definition 6.1. *A subset S of M is* **achronal** *(resp.* **acausal***) if there is no non-trivial time-like (resp. causal) curve joining two points in S. It is only* **locally achronal** *(resp.* **locally acausal***) if every point in S admits a neighborhood U such that the intersection $U \cap S$ is achronal (resp. acausal) inside U.*

Typical examples of locally acausal subsets are space-like surfaces, but the definition above also includes non-differentiable "space-like" surfaces, with only Lipschitz regularity. Lipschitz space-like surfaces provide actually the general case if one adds the *edgeless* assumption :

Definition 6.2. *A locally achronal subset S is* **edgeless** *if every point x in S admits a neighborhood U such that every causal curve in U joining one point of the past of x (inside U) to a point in the future (in U) of x intersects S.*

In the regular case, closed edgeless locally achronal subsets are embedded locally Lipschitz surfaces. More precisely, in the coordinates (z, t) defined in Sect. 6.1, they are graphs of 1-Lipschitz maps defined on D.

This property still holds in M, except the locally Lipschitz property which is not valid anymore at singular points, but only a weaker weighted version holds: closed edgeless acausal subsets containing x corresponds to Hölder functions $f : D \to]-1, 1[$ differentiable almost everywhere and satisfying:

$$\|d_\zeta f\| < \frac{|\zeta|^{-m}}{1-m} \ .$$

Go back to the coordinate system (z, t). The acausal subset is then the graph of a 1-Lipschitz map φ over the disk minus the wedge. Moreover, the values of φ on the boundary of the wedge must coincide since they have to be sent one to the other by the rotation performing the glueing. Hence, for every $r < 1$:

$$\varphi(r) = \varphi(re^{i2\alpha\pi}) \ .$$

We can extend φ over the wedge by defining $\varphi(re^{i\theta}) = \varphi(r)$ for $2\alpha\pi \leq \theta \leq 2\pi$. This extension over the entire $D \setminus \{0\}$ is then clearly 1-Lipschitz. It therefore extends at 0. We have just proved:

Lemma 6.3. *The closure of any closed edgeless achronal subset of M^* is a closed edgeless achronal subset of M.*

Definition 6.4. *A space-like surface S in M is a closed edgeless locally acausal subset whose intersection with the regular part M^* is a smooth embedded space-like surface.*

6.3. Time functions. As in the regular case, we can define time functions as maps $T : M \to \mathbb{R}$ which are strictly increasing along any future oriented causal curve. For non-singular spacetimes the existence is related to *stable causality :*

Definition 6.5. *Let g, g' be two Lorentzian metrics on the same manifold X. Then, g' dominates g if every causal tangent vector for g is time-like for g'. We denote this relation by $g \prec g'$.*

Definition 6.6. *A Lorentzian metric g is stably causal if there is a metric g' such that $g \prec g'$, and such that (X, g') is chronological, i.e. admits no periodic time-like curve.*

Theorem 6.7 (See [BEE96]). *A Lorentzian manifold (M, g) admits a time function if and only if it is stably causal. Moreover, when a time function exists, then there is a smooth time function.*

Remark 6.8. In Sect. 6.1 we defined some differentiable atlas on the manifold M. For this differentiable structure, the null cones of g_0 degenerate along singular lines to half-lines tangent to the "singular" line (which is perfectly smooth for the selected differentiable atlas). Obviously, we can extend the definition of domination to the more general case $g_0 \prec g$, where g_0 is our singular metric and g a smooth regular metric. Therefore, we can define the stable causality in this context: g_0 is stably causal if there is a smooth Lorentzian metric g' which is chronological and such that $g_0 \prec g'$. Theorem 6.7 is still valid in this more general context. Indeed, there is a smooth Lorentzian metric g such that $g_0 \prec g \prec g'$, which is stably causal since g is dominated by the achronal metric g'. Hence there is a time function T for the metric g, which is still a time function for g_0 since $g_0 \prec g$: causal curves for g_0 are causal curves for g.

Lemma 6.9. *The singular metric g_0 is stably causal if and only if its restriction to the regular part M^* is stably causal. Therefore, (M, g_0) admits a smooth time function if and only if (M^*, g_0) admits a time function.*

Proof. The fact that (M^*, g_0) is stably causal as soon as (M, g_0) is stably causal is obvious. Let us assume that (M^*, g_0) is stably causal: let g' be a smooth chronological Lorentzian metric on M^* dominating g_0. On the other hand, using the local models around singular lines, it is easy to construct a chronological Lorentzian metric g'' on a tubular neighborhood U of the singular locus of g_0 (the fact that g' is chronological implies that the singular lines are not periodic). Actually, by reducing the tubular neighborhood U and modyfing g'' therein, one can assume that g' dominates g'' on U. Let U' be a smaller tubular neighborhood of the singular locus such that $\overline{U'} \subset U$, and let a, b be a partition of unity subordinate to U, $M \setminus U'$. Then $g_1 = ag'' + bg'$ is a smooth Lorentzian metric dominating g_0. Moreover, we also have $g_1 \prec g'$ on M^*. Hence any time-like curve for g_1 can be slightly perturbed to a time-like curve for g' avoiding the singular lines. It follows that (M, g_0) is stably causal. □

2 2 0 1 3 1 8 B
Jour. No Ms. No.
Dispatch: 3/9/2011
Total pages: 54
Disk Received ☑
Disk Used ☑
Journal: Commun. Math. Phys.
Not Used ☐
Corrupted ☐
Mismatch ☐

6.4. Cauchy surfaces.

Definition 6.10. *A space-like surface S is a Cauchy surface if it is acausal and intersects every inextendible causal curve in M.*

Since a Cauchy surface is acausal, its future $I^+(S)$ and its past $I^-(S)$ are disjoint.

Remark 6.11. The regular part of a Cauchy surface in M is not a Cauchy surface in the regular part M^*, since causal curves can exit the regular region through a time-like singularity.

Definition 6.12. *A singular AdS spacetime is globally hyperbolic if it admits a Cauchy surface.*

Remark 6.13. We defined Cauchy surfaces as smooth objects for further requirements in this paper, but this definition can be generalized for non-smooth locally achronal closed subsets. This more general definition leads to the same notion of globally hyperbolic spacetimes, i.e. singular spacetimes admitting a non-smooth Cauchy surface also admits a smooth one.

Proposition 6.14. *Let M be a singular AdS spacetime without interaction and with singular set reduced to massive particles. Assume that M is globally hyperbolic. Then M admits a time function $T : M \to \mathbb{R}$ such that every level $T^{-1}(t)$ is a Cauchy surface.*

Proof. This is a well-known theorem by Geroch in the regular case, even for general globally hyperbolic spacetimes without compact Cauchy surfaces ([Ger70]). But, the singular version does not follow immediately by applying this regular version to M^* (see Remark 6.11).

Let l be an inextendible causal curve in M. It intersects the Cauchy surface S, and since S is achronal, l cannot be periodic. Therefore, M admits no periodic causal curve, i.e. is *acausal.*

Let U be a small tubular neighborhood of S in M, such that the boundary ∂U is the union of two space-like hypersurfaces S_-, S_+ with $S_- \subset I^-(S)$, $S_+ \subset I^+(S)$, and such that every inextendible future oriented causal curve in U starts from S_-, intersects S and then hits S^+. Any causal curve starting from S_- leaves immediately S_-, crosses S at some point x', and then cannot cross S anymore. In particular, it cannot go back in the past of S since S is acausal, and thus, does not reach S_- anymore. Therefore, S_- is acausal. Similarly, S_+ is acausal. It follows that $S_\pm$ are both Cauchy surfaces for (M, g_0).

For every x in $I^+(S_-)$ and every past oriented g_0-causal tangent vector v, the past oriented geodesic tangent to (x, v) intersects S. The same property holds for tangent vector (x, v') nearby. It follows that there exists on $I^+(S_-)$ a smooth Lorentzian metric g_1' such that $g_0 \prec g_1'$ and such that every inextendible past oriented g_1'-causal curve attains S. Furthermore, we can select g_1' such that S is g_1'-space-like, and such that every future oriented g_1'-causal vector tangent at a point of S points in the g_0-future of S. It follows that future oriented g_1'-causal curves crossing S cannot come back to S: S is acausal, not only for g_0, but also for g_1'.

We can also define g_2' in the past of S_+ so that $g_0 \prec g_2'$, every inextendible future oriented g_2'-causal curve attains S, and such that S is g_2'-acausal. We can now interpolate in the common region $I^+(S_-) \cap I^-(S_+)$, getting a Lorentzian metric g' on the entire M such that $g_0 \prec g' \prec g_1'$ on $I^+(S_-)$, and $g_0 \prec g' \prec g_2'$ on $I^-(S_+)$. Observe that even if it is not totally obvious that the metrics g_i' can be selected continuous, we have enough room to pick such a metric g' in a continuous way.

Let l be a future oriented g'-causal curve starting from a point in S. Since $g' \prec g'_1$, this curve is also g'_1-causal as long as it remains inside $I^+(S_-)$. But since S is acausal for g'_1, it implies that l cannot cross S anymore: hence l lies entirely in $I^+(S)$. It follows that S is acausal for g'.

By construction of g'_1, every past-oriented g'_1-causal curve starting from a point inside $I^+(S)$ must intersect S. Since $g' \prec g'_1$ the same property holds for g'-causal curves. Using g'_2 for points in $I^+(S_-)$, we get that every inextendible g'-causal curve intersects S. Hence, (M, g') is globally hyperbolic. According to Geroch's Theorem in the regular case, there is a time function $T : M \to \mathbb{R}$ whose levels are Cauchy surfaces. The proposition follows, since g_0-causal curves are g'-causal curves, implying that g'-Cauchy surfaces are g_0-Cauchy surfaces and that g'-time functions are g_0-time functions. □

Corollary 6.15. *If (M, g_0) is globally hyperbolic, there is a decomposition $M \approx S \times \mathbb{R}$, where every level $S \times \{*\}$ is a Cauchy surface, and very vertical line $\{*\} \times \mathbb{R}$ is a singular line or a time-like line.*

Proof. Let $T : M \to \mathbb{R}$ be the time function provided by Proposition 6.14. Let X be minus the gradient (for g_0) of T: it is a future oriented time-like vector field on M^*. Consider also a future oriented time-like vector field Y on a tubular neighborhood U of the singular locus: using a partition of unity as in the proof of Lemma 6.9, we can construct a smooth time-like vector field $Z = aY + bX$ on M tangent to the singular lines. The orbits of the flow generated by Z are time-like curves. The global hyperbolicity of (M, g_0) ensures that each of these orbits intersect every Cauchy surface, in particular, the level sets of T. In other words, for every x in M the Z-orbit of x intersects S at a point $p(x)$. Then the map $F : M \to S \times \mathbb{R}$ defined by $F(x) = (p(x), T(x))$ is the desired diffeomorphism between M and $S \times \mathbb{R}$. □

6.5. Maximal globally hyperbolic extensions. From now we assume that M is globally hyperbolic, admitting a compact Cauchy surface S. In this section, we prove the following facts, well-known in the case of regular globally hyperbolic solutions to the Einstein equation ([Ger70]): *there exists a maximal extension, which is unique up to isometry.*

Definition 6.16. *An isometric embedding $i : (M, S) \to (M', S')$ is a Cauchy embedding if $S' = i(S)$ is a Cauchy surface of M'.*

Remark 6.17. If $i : M \to M'$ is a Cauchy embedding then the image $i(S')$ of any Cauchy surface S' of M is also a Cauchy surface in M'. Indeed, for every inextendible causal curve l in M', every connected component of the preimage $i^{-1}(l)$ is an inextendible causal curve in M, and thus intersects S. Since l intersects $i(S)$ in exactly one point, $i^{-1}(l)$ is connected. It follows that the intersection $l \cap i(S')$ is non-empty and reduced to a single point: $i(S')$ is a Cauchy surface.

Therefore, we can define Cauchy embeddings without reference to the selected Cauchy surface S. However, the natural category is the category of *marked* globally hyperbolic spacetimes, i.e. pairs (M, S).

Lemma 6.18. *Let $i_1 : (M, S) \to (M', S')$, $i_2 : (M, S) \to (M', S')$ be two Cauchy embeddings into the same marked globally hyperbolic singular AdS spacetime (M', S'). Assume that i_1 and i_2 coincide on S. Then, they coincide on the entire M.*

2 2 0 1 3 1 8 B
Jour. No Ms. No.
Dispatch: 3/9/2011
Total pages: 54
Disk Received ☑
Disk Used ☑
Journal: Commun. Math. Phys.
Not Used ☐
Corrupted ☐
Mismatch ☐

Proof. If x', y' are points in M' sufficiently near to S', say, in the future of S', then they are equal if and only if the intersections $I^-(x') \cap S'$ and $I^-(y') \cap S'$ are equal. Apply this observation to $i_1(x)$, $i_2(x)$ for x near S: we obtain that i_1, i_2 coincide in a neighborhood of S.

Let now x be any point in M. Since there is only a finite number of singular lines in M, there is a time-like geodesic segment $[y, x]$, where y lies in S, and such that $[y, x[$ is contained in M^* (x may be singular). Then x is the image by the exponential map of some ξ in $T_y M$. Then $i_1(x)$, $i_2(x)$ are the image by the exponential map of respectively $d_y i_1(\xi)$, $d_y i_2(\xi)$. But these tangent vectors are equal, since $i_1 = i_2$ near S. □

Lemma 6.19. *Let $i : M \to M'$ be a Cauchy embedding into a singular AdS spacetime. Then, the image of i is causally convex, i.e. any causal curve in M' admitting extremities in $i(M)$ lies inside $i(M)$.*

Proof. Let l be a causal segment in M' with extremities in $i(M)$. We extend it as an inextendible causal curve $\hat{l}$. Let l' be a connected component of $\hat{l} \cap i(M)$: it is an inextendible causal curve inside $i(M)$. Thus, its intersection with $i(S)$ is non-empty. But $\hat{l} \cap i(S)$ contains at most one point: it follows that $\hat{l} \cap i(M)$ admits only one connected component, which contains l. □

Corollary 6.20. *The boundary of the image of a Cauchy embedding $i : M \to M'$ is the union of two closed edgeless achronal subsets S^+, S^- of M', and $i(M)$ is the intersection between the past of S^+ and the future of S^-.*

Each of S^+, S^- might be empty, and is not necessarily connected.

Proof. This is a general property of causally convex open subsets: S^+ (resp. S^-) is the set of elements in the boundary of $i(M)$ whose past (resp. future) intersects $i(M)$. The proof is straightforward and left to the reader. □

Definition 6.21. *(M, S) is maximal if every Cauchy embedding $i : M \to M'$ into a singular AdS spacetime is onto, i.e. an isometric homeomorphism.*

Proposition 6.22. *(M, S) admits a maximal singular AdS extension, i.e. a Cauchy embedding into a maximal globally hyperbolic singular AdS spacetime $(\widehat{M}, \hat{S})$ without interaction.*

Proof. Let $\mathcal{M}$ be the set of Cauchy embeddings $i : (M, S) \to (M', S')$. We define on $\mathcal{M}$ the relation $(i_1, M_1, S_1) \preceq (i_2, M_2, S_2)$ if there is a Cauchy embedding $i : (M_1, S_1) \to (M_2, S_2)$ such that $i_2 = i \circ i_1$. It defines a preorder on $\mathcal{M}$. Let $\overline{\mathcal{M}}$ be the space of Cauchy embeddings up to isometry, i.e. the quotient space of the equivalence relation identifying (i_1, M_1, S_1) and (i_2, M_2, S_2) if there is an isometric homeomorphism $i : (M_1, S_1) \to (M_2, S_2)$ such that $i_2 = i \circ i_1$. Then $\preceq$ induces on $\overline{\mathcal{M}}$ a preorder relation, that we still denote by $\preceq$. Lemma 6.18 ensures that $\preceq$ is a partial order (if $(i_1, M_1, S_1) \preceq (i_2, M_2, S_2)$ and $(i_2, M_2, S_2) \preceq (i_1, M_1, S_1)$, then M_1 and M_2 are isometric and represent the same element of $\overline{\mathcal{M}}$). Now, any totally ordered subset A of $\overline{\mathcal{M}}$ admits an upper bound in A: the inverse limit of (representants of) the elements of A. By the Zorn Lemma, we obtain that $\overline{\mathcal{M}}$ contains a maximal element. Any representant in $\overline{\mathcal{M}}$) of this maximal element is a maximal extension of (M, S). □

Remark 6.23. The proof above is sketchy: for example, we did not justify the fact that the inverse limit is naturally a singular AdS spacetime. This is however a straightforward verification, the same as in the classical situation, and is left to the reader.

2 2 0 1 3 1 8 B
Jour. No Ms. No.
Dispatch: 3/9/2011
Total pages: 54
Disk Received ☑
Disk Used ☑
Journal: Commun. Math. Phys.
Not Used ☐
Corrupted ☐
Mismatch ☐

Proposition 6.24. *The maximal extension of* (M, S) *is unique up to isometry.*

Proof. Let $(\widehat{M}_1, S_1)$, $(\widehat{M}_2, S_2)$ be two maximal extensions of (M, S). Consider the set of globally hyperbolic singular AdS spacetimes (M', S') for which there is a commutative diagram as below, where arrows are Cauchy embeddings.

$$\begin{tikzcd}
 & & (\widehat{M}_1, S_1) \\
(M, S) \arrow[r] \arrow[urr] \arrow[drr] & (M', S') \arrow[ur] \arrow[dr] & \\
 & & (\widehat{M}_2, S_2)
\end{tikzcd}$$

Reasoning as in the previous proposition, we get that this set admits a maximal element: there is a marked extension (M', S') of (M, S), and Cauchy embeddings $\varphi_i : M' \to \widehat{M}_i$ which cannot be simultaneously extended.

Define $\widehat{M}$ as the union of $(\widehat{M}_1, S_1)$ and $(\widehat{M}_2, S_2)$, identified along their respective embedded copies of (M', S'), through $\varphi := \varphi_2 \circ \varphi_1^{-1}$, equipped with the quotient topology. The key point is to prove that $\widehat{M}$ is Hausdorff. Assume not: there is a point x_1 in $\widehat{M}_1$, a point x_2 in $\widehat{M}_2$, and a sequence y_n in M' such that $\varphi_i(y_n)$ converges to x_i, but such that x_1 and x_2 do not represent the same element of $\widehat{M}$. It means that y_n does not converge in M', and that x_i is not in the image of φ_i. Let U_i be small neighborhoods in $\widehat{M}_i$ of x_i.

Denote by S_i^+, S_i^- the upper and lower boundaries of $\varphi_i(M')$ in $\widehat{M}_i$ (cf. Corollary 6.20). Up to time reversal, we can assume that x_1 lies in S_1^+: it implies that all the $\varphi_1(y_n)$ lies in $I^-(S_1^+)$, and that, if U_1 is small enough, $U_1 \cap I^-(x_1)$ is contained in $\varphi_1(M')$. It is an open subset, hence φ extends to some AdS isometry $\overline{\varphi}$ between U_1 and U_2 (reducing the U_i if necessary). Therefore, every φ_i can be extended to isometric embeddings $\overline{\varphi}_i$ of a spacetime M'' containing M', so that

$$\overline{\varphi}_2 = \overline{\varphi} \circ \overline{\varphi}_1.$$

We intend to prove that x_i and U_i can be chosen such that S_i is a Cauchy surface in $\overline{\varphi}_i(M'') = \overline{\varphi}_i(M') \cup U_i$. Consider past oriented causal curves, starting from x_1, and contained in S_1^+. They are partially ordered by the inclusion. According to the Zorn Lemma, there is a maximal causal curve l_1 satisfying all these properties. Since S_1^+ is disjoint from S_1, and since every inextendible causal curve crosses S, the curve l_1 is not inextendible: it has a final endpoint y_1 belonging to S_1^+ (since S_1^+ is closed). Therefore, any past oriented causal curve starting from y_1 is disjoint from S_1^+ (except at the starting point y_1).

We have seen that φ can be extended over in a neighborhood of x_1: this extension maps the initial part of l_1 onto a causal curve in $\widehat{M}_2$ starting from x_2 and contained in S_2^+. By compactness of l_1, this extension can be performed along the entire l_1, and the image is a causal curve admitting a final point y_2 in S_2^+. The points y_1 and y_2 are not separated one from the other by the topology of $\widehat{M}$. Replacing x_i by y_i, we can thus assume that *every past oriented causal curve starting from* x_i *is contained in* $I^-(S_i^+)$. It follows that, once more reducing U_i if necessary, inextendible past oriented causal curves starting from points in U_i and in the future of S_i^+ intersects S_i^+ before escaping

2 2 0 1 3 1 8 B
Jour. No Ms. No.
Dispatch: 3/9/2011
Total pages: 54
Disk Received ☑
Disk Used ☑
Journal: Commun. Math. Phys.
Not Used ☐
Corrupted ☐
Mismatch ☐

from U_i. In other words, inextendible past oriented causal curves in $U_i \cup I^-(S_i^+)$ are also inextendible causal curves in $\widehat{M}_i$, and therefore, intersect S_i. As required, S_i is a Cauchy surface in $U_i \cup \overline{\varphi_i}(M')$.

Hence, there is a Cauchy embedding of (M, S) into some globally hyperbolic space-time (M'', S''), and Cauchy embeddings $\overline{\varphi}_i : (M'', S'') \to \varphi_i(M') \cup U_i$, which are related by some isometry $\overline{\varphi} : \varphi_1(M') \cup U_1 \to \varphi_2(M') \cup U_2$:

$$\overline{\varphi}_2 = \overline{\varphi} \circ \overline{\varphi}_1.$$

It is a contradiction with the maximality of (M', S'). Hence, we have proved that $\widehat{M}$ is Hausdorff. It is a manifold, and the singular AdS metrics on $\widehat{M}_1$, $\widehat{M}_2$ induce a singular AdS metric on $\widehat{M}$. Observe that S_1 and S_2 projects in $\widehat{M}$ onto the same space-like surface $\widehat{S}$. Let l be any inextendible curve in $\widehat{M}$. Without loss of generality, we can assume that l intersects the projection W_1 of $\widehat{M}_1$ in $\widehat{M}$. Then every connected component of $l \cap W_1$ is an inextendible causal curve in $W_1 \approx \widehat{M}_1$. It follows that l intersects $\widehat{S}$. Finally, if some causal curve links two points in $\widehat{S}$, then it must be contained in W_1 since globally hyperbolic open subsets are causally convex. It would contradict the acausality of S_1 inside $\widehat{M}_1$.

The conclusion is that $\widehat{M}$ is globally hyperbolic, and that $\widehat{S}$ is a Cauchy surface in $\widehat{M}$. In other words, the projection of $\widehat{M}_i$ into $\widehat{M}$ is a Cauchy embedding. Since $\widehat{M}_i$ is a maximal extension, these projections are onto. Hence $\widehat{M}_1$ and $\widehat{M}_2$ are isometric. □

Remark 6.25. The uniqueness of the maximal globally hyperbolic AdS extension is no longer true if we allow interactions. Indeed, in the next section we will see how, given some singular AdS spacetime without interaction, to define a surgery near a point in a singular line, introducing some collision or interaction at this point. The place where such a surgery can be performed is arbitrary.

However, the uniqueness of the maximal globally hyperbolic extension holds in the case of interactions, if one stipulates that no new interactions can be introduced. The point is to consider the maximal extension in the future of a Cauchy surface in the future of all interactions, and the maximal extension in the past of a Cauchy surface contained in the past of all interactions. This point, along with other aspects of the global geometry of moduli spaces of AdS manifolds with interacting particles, is further studied in [BBS10].

7. Global Examples

The main goal of this section is to construct examples of globally hyperbolic singular AdS manifolds with interacting particles, so we go beyond the local examples constructed in Sect. 2. In a similar way examples of globally hyperbolic flat or de Sitter space-times with interacting particles can be also constructed.

Sections 7.1 and 7.2 are presented in the AdS setting, but can presumably largely be extended to the Minkowski or de Sitter setting. The next two parts, however, are more specifically AdS and an extension to the Minkowski or de Sitter context is less clear.

7.1. An explicit example. Let S be a hyperbolic surface with one cone point p of angle θ. Denote by μ the corresponding singular hyperbolic metric on S.

Let us consider the Lorentzian metric on $S \times (-\pi/2, \pi/2)$ given by

$$h = -\mathrm{d}t^2 + \cos^2 t\, \mu, \tag{2}$$

where t is the real parameter of the interval $(-\pi/2, \pi/2)$.

2 2 0 1 3 1 8 B
Jour. No Ms. No.
Dispatch: 3/9/2011
Total pages: 54
Disk Received ☑
Disk Used ☑
Journal: Commun. Math. Phys.
Not Used ☐
Corrupted ☐
Mismatch ☐

We denote by $M(S)$ the singular spacetime $(S \times (-\pi/2, \pi/2), h)$.

Lemma 7.1. *$M(S)$ is an AdS spacetime with a particle corresponding to the singular line $\{p\} \times (-\pi/2, \pi/2)$. The corresponding cone angle is θ. Level surfaces $S \times \{t\}$ are orthogonal to the singular locus.*

Proof. First we show that h is an AdS metric. The computation is local, so we can assume $S = \mathbb{H}^2$. Thus we can identify S to a geodesic plane in AdS_3. We consider AdS_3 as embedded in $\mathbb{R}^{2,2}$, as mentioned in the Introduction. Let n be the normal direction to S, then we can consider the normal evolution

$$F : S \times (-\pi/2, \pi/2) \ni (x, t) \mapsto \cos t x + \sin t n \in AdS_3.$$

The map F is a diffeomorphism onto an open domain of AdS_3 and the pull-back of the AdS_3-metric takes the form (2).

To prove that $\{p\} \times (-\pi/2, \pi/2)$ is a conical singularity of angle θ, take a geodesic plane P in $\mathcal{P}_\theta$ orthogonal to the singular locus. Notice that P has exactly one cone point p_0 corresponding to the intersection of P with the singular line of $\mathcal{P}_\theta$ (here $\mathcal{P}_\theta$ is the singular model space defined in Subsect. 3.7). Since the statement is local, it is sufficient to prove it for P. Notice that the normal evolution of $P \setminus \{p_0\}$ is well-defined for any $t \in (-\pi/2, \pi/2)$. Moreover, such evolution can be extended to a map on the whole $P \times (-\pi/2, \pi/2)$ sending $\{p_0\} \times (-\pi/2, \pi/2)$ onto the singular line. This map is a diffeomorphism of $P \times (-\pi/2, \pi/2)$ with an open domain of $\mathcal{P}_\theta$. Since the pull-back of the AdS-metric of $\mathcal{P}_\theta$ on $(P \setminus \{p_0\}) \times (-\pi/2, \pi/2)$ takes the form (2) the statement follows. □

Let T be a triangle in HS^2, with one vertex in the future hyperbolic region and two vertices in the past hyperbolic region. Doubling T, we obtain a causally regular HS-sphere Σ with an elliptic future singularity at p and two elliptic past singularities, q_1, q_2.

Let r be the future singular ray in $e(\Sigma)$. For a given $\epsilon > 0$ let p_ϵ be the point at distance ϵ from the interaction point. Consider the geodesic disk D_ϵ in $e(\Sigma)$ centered at p_ϵ, orthogonal to r and with radius ϵ.

The past normal evolution $n_t : D_\epsilon \to e(\Sigma)$ is well-defined for $t \leq \epsilon$. In fact, if we restrict to the annulus $A_\epsilon = D_\epsilon \setminus D_{\epsilon/2}$, the evolution can be extended for $t \leq \epsilon'$ for some $\epsilon' > \epsilon$ (Fig. 11).

Let us set

$$\begin{aligned} U_\epsilon &= \{n_t(p) \mid p \in D_\epsilon, t \in (0, \epsilon)\}, \\ \Delta_\epsilon &= \{n_t(p) \mid p \in D_\epsilon \setminus D_{\epsilon/2}, t \in (0, \epsilon')\}. \end{aligned}$$

Notice that the interaction point is in the closure of U_ϵ. It is possible to contruct a neighborhood Ω_ϵ of the interaction point p_0 such that

- $U_\epsilon \cup \Delta_\epsilon \subset \Omega_\epsilon \subset U_\epsilon \cup \Delta_\epsilon \cup B(p_0)$ where $B(p_0)$ is a small ball around p_0;
- Ω_ϵ admits a foliation in achronal disks $(D(t))_{t \in (0, \epsilon')}$ such that
  (1) $D(t) = n_t(D_\epsilon)$ for $t \leq \epsilon$,
  (2) $D(t) \cap \Delta_t = n_t(D_\epsilon \setminus D_{\epsilon/2})$ for $t \in (0, \epsilon')$,
  (3) $D(t)$ is orthogonal to the singular locus.

Consider now the space $M(S)$ as in the previous lemma. For small ϵ the disk D_ϵ embeds in $M(S)$, sending p_ϵ to $(p, 0)$.

2 2 0 1 3 1 8 B
Jour. No Ms. No.
Dispatch: 3/9/2011
Total pages: 54
Disk Received ☑
Disk Used ☑
Journal: Commun. Math. Phys.
Not Used ☐
Corrupted ☐
Mismatch ☐

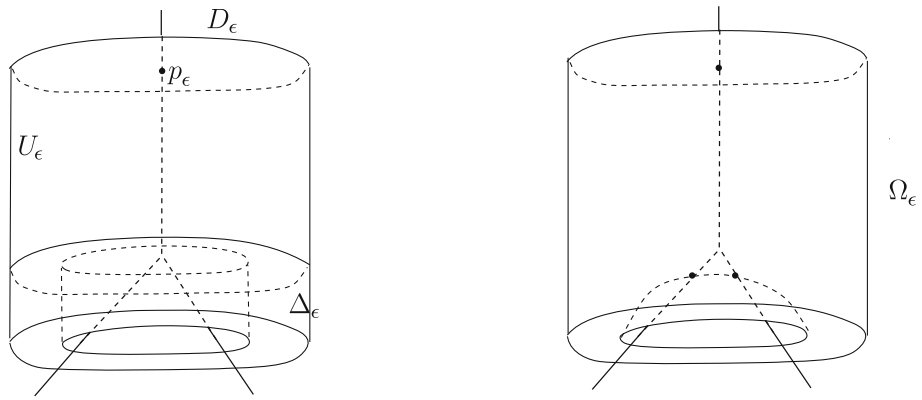

Fig. 11. Construction of a singular tube with an interaction of two particles

Let us identify D_ϵ with its image in $M(S)$. The normal evolution on D_ϵ in $M(S)$ is well-defined for $0 < t < \pi/2$ and in fact coincides with the map

$$n_t(x, 0) = (x, t).$$

It follows that the map

$$F : (D_\epsilon \setminus D_{\epsilon/2}) \times (0, \epsilon') \to \Delta_\epsilon,$$

defined by $F(x, t) = n_t(x)$ is an isometry (Fig. 11).

Thus if we glue $(S \setminus D_{\epsilon/2}) \times (0, \epsilon')$ to Ω_ϵ by identifying $D_\epsilon \setminus D_{\epsilon/2}$ to Δ_ϵ via F we get a spacetime with particles

$$\hat{M} = (S \setminus D_{\epsilon/2}) \times (0, \epsilon') \cup_F \Omega_\epsilon$$

that easily verifies the following statement.

Proposition 7.2. *There exists a locally AdS_3 manifold with particles $\hat{M}$ such that*

(1) *topologically, $\hat{M}$ is homeomorphic to $S \times \mathbb{R}$,*
(2) *in $\hat{M}$, two particles collide producing one particle only,*
(3) *$\hat{M}$ admits a foliation by spacelike surfaces orthogonal to the singular locus.*

We say that $\hat{M}$ is obtained by a surgery on $M' = S \times (0, \epsilon')$.

7.2. Surgery. In this section we get a generalization of the construction explained in the previous section. In particular we show how to do a surgery on a spacetime with conical singularity in order to obtain a spacetime with collision more complicated than that described in the previous section.

Lemma 7.3. *Let Σ be a causally regular HS-sphere containing only elliptic singularities. Suppose that the circle of photons C_+ bounding the future hyperbolic part of Σ carries an elliptic structure of angle θ. Then $e(\Sigma) \setminus (I^+(p_0) \cup I^-(p_0))$ embeds in $\mathcal{P}_\theta$ (p_0 denotes the interaction point of $e(\Sigma)$).*

2 2 0 1 3 1 8 B
Jour. No Ms. No.
Dispatch: 3/9/2011
Total pages: 54
Disk Received ☑
Disk Used ☑
Journal: Commun. Math. Phys.
Not Used ☐
Corrupted ☐
Mismatch ☐

Proof. Let D be the de Sitter part of Σ, Notice that

$$e(D) = e(\Sigma) \setminus (I^+(p_0) \cup I^-(p_0)).$$

To prove that $e(D)$ embeds in $\mathcal{P}_\theta$ it is sufficient to prove that D is isometric to the de Sitter part of the HS sphere Σ_θ that is the link of a singular point of $\mathcal{P}_\theta$. Such de Sitter surface is the quotient of $\tilde{dS}_2$ under an elliptic transformation of $\tilde{SO}(2,1)$ of angle θ.

So the statement is equivalent to proving that the developing map

$$d : \tilde{D} \to \tilde{dS}_2$$

is a diffeomorphism. Since $\tilde{dS}_2$ is simply connected and d is a local diffeomorphism, it is sufficient to prove that d is proper.

As in Sect. 5, $\tilde{dS}_2$ can be completed by two lines of photons, say R_+, R_- that are projectively isomorphic to $\tilde{\mathbb{RP}}^1$.

Consider the left isotropic foliation of $\tilde{dS}_2$. Each leaf has an α-limit in R_- and an ω-limit on R_+. Moreover every point of R_- (resp. R_+) is an α-limit (resp. ω-limit) of exactly one leaf of each foliation. Thus we have a continuous projection $\iota_L : \tilde{dS}_2 \cup R_- \cup R_+ \to R_+$, obtained by sending a point x to the ω-limit of the leaf of the left foliation through it. The map ι_L is a proper submersion. Since D does not contain singularities, we have an analogous proper submersion,

$$\iota'_L : \tilde{D} \cup \tilde{C}_- \cup \tilde{C}_+ \to \tilde{C}_+,$$

where $\tilde{C}_+$, $\tilde{C}_-$ are the universal covering of the circle of photons of Σ.

By the naturality of the construction, the following diagram commutes

$$\begin{array}{ccc} \tilde{D} \cup \tilde{C}_- \cup \tilde{C} & \xrightarrow{d} & \tilde{dS}_2 \cup R_- \cup R_+ \\ \iota'_L \big\downarrow & & \iota_L \big\downarrow \\ \tilde{C}_+ & \xrightarrow{d} & \tilde{R}_+. \end{array}$$

The map $d|_{\tilde{C}_+}$ is the developing map for the projective structure of C_+. By the hypothesis, we have that $d|_{\tilde{C}_+}$ is a homeomorphism, so it is proper.

Since the diagram is commutative and the fact that ι_L and ι'_L are both proper, one easily proves that d is proper. □

Remark 7.4. If Σ is a causally regular HS-sphere containing only elliptic singularities, the map $\iota'_L : \tilde{C}_- \to \tilde{C}_+$ induces a projective isomorphism $\bar{\iota} : C_- \to C_+$.

Definition 7.5. *Let M be a singular spacetime homeomorphic to $S \times \mathbb{R}$ and let $p \in M$. A neighborhood U of p is said to be* **cylindrical** *if*

- *U is topologically a ball;*
- *$\partial_\pm C := \partial U \cap I^\pm(p)$ is a spacelike disk;*
- *there are two disjoint closed spacelike slices S_-, S_+ homeomorphic to S such that $S_- \subset I^-(S_+)$ and $I^\pm(p) \cap S_\pm = \partial_\pm C$.*

Remark 7.6.

- If a spacelike slice through p exists then cylindrical neighborhoods form a fundamental family of neighborhoods.
- There is an open retract M' of M whose boundary is $S_- \cup S_+$.

2 2 0 1 3 1 8 B
Jour. No Ms. No.
Dispatch: 3/9/2011
Total pages: 54
Disk Received ☑
Disk Used ☑
Journal: Commun. Math. Phys.
Not Used ☐
Corrupted ☐
Mismatch ☐

Corollary 7.7. *Let Σ be a HS-sphere as in Lemma 7.3. Given an AdS spacetime M homeomorphic to $S \times \mathbb{R}$ containing a particle of angle θ, let us fix a point p on it and suppose that a spacelike slice through p exists. There is a cylindrical neighborhood C of p and a cylindrical neighborhood C_0 of the interaction point p_0 in $e(\Sigma)$ such that $C \setminus (I^+(p) \cup I^-(p))$ is isometric to $C_0 \setminus (I^+(p_0) \cup I^-(p_0))$.*

Take an open deformation retract $M' \subset M$ with spacelike boundary such that $\partial_\pm C \subset \partial M'$. Thus let us glue $M' \setminus (I^+(p) \cup I^-(p))$ and C_0 by identifying $C \setminus (I^+(p) \cup I^-(p))$ to $C_0 \cap e(D)$. In this way we get a spacetime $\hat{M}$ homeomorphic to $S \times \mathbb{R}$ with an interaction point modelled on $e(\Sigma)$. We say that $\hat{M}$ is obtained by a surgery on M'.

The following proposition is a kind of converse to the previous construction.

Proposition 7.8. *Let $\hat{M}$ be a spacetime with conical singularities homeomorphic to $S \times \mathbb{R}$ containing only one interaction between particles. Suppose moreover that a neighborhood of the interaction point is isometric to an open subset in $e(\Sigma)$, where Σ is a HS-surface as in Lemma 7.3. Then a subset of $\hat{M}$ is obtained by a surgery on a spacetime without interaction.*

Proof. Let p_0 be the interaction point. There is an HS-sphere Σ as in Lemma 7.3 such that a neighborhood of p_0 is isometric to a neighborhood of the vertex of $e(\Sigma)$. In particular there is a small cylindrical neighborhood C_0 around p_0. According to Lemma 7.3, for a suitable cylindrical neighborhood C of a singular point p in $\mathcal{P}_\theta$ we have

$$C \setminus (I^+(p) \cup I^-(p)) \cong C_0 \setminus (I^+(p_0) \cup I^-(p_0)).$$

Taking the retract M' of $\hat{M}$ such that $\partial_\pm C_0$ is in the boundary of M', the spacetime $M' \setminus (I^+(p_0) \cup I^-(p_0))$ can be glued to C via the above identification. We get a spacetime M with only one singular line. Clearly the surgery on M of C_0 produces M'. □

7.3. Spacetimes containing BTZ-type singularities. In this section we describe a class of spacetimes containing BTZ-type singularities.

We use the projective model of AdS geometry, that is the $AdS_{3,+}$. From Subsect. 2.2, $AdS_{3,+}$ is a domain in $\mathbb{RP}^3$ bounded by the double ruled quadric Q. Using the double family of lines $\mathcal{L}_l, \mathcal{L}_r$ we identify Q to $\mathbb{RP}^1 \times \mathbb{RP}^1$ so that the isometric action of $\mathrm{Isom}_{0,+} = PSL(2,\mathbb{R}) \times PSL(2,\mathbb{R})$ on AdS_3 extends to the product action on the boundary.

We have seen in Sect. 2.2 that gedesics of $AdS_{3,+}$ are projective segments whereas geodesics planes are the intersection of $AdS_{3,+}$ with projective planes. The scalar product of $\mathbb{R}^{2,2}$ induces a duality between points and projective planes and between projective lines. In particular points in AdS_3 are dual to spacelike planes and the dual of a spacelike geodesic is still a spacelike geodesic. Geometrically, every timelike geodesic starting from a point $p \in AdS_3$ orthogonally meets the dual plane at time $\pi/2$, and points on the dual plane can be characterized by the property to be connected to p be a timelike geodesic of length $\pi/2$. Analogously, the dual line of a line l is the set of points that be can be connected to every point of l by a timelike geodesic of length $\pi/2$.

Now, consider two hyperbolic transformations $\gamma_1, \gamma_2 \in PSL(2,\mathbb{R})$ with the same translation length. There are exactly 2 spacelike geodesics l_1, l_2 in AdS_3 that are invariant under the action of $(\gamma_1, \gamma_2) \in PSL(2,\mathbb{R}) \times PSL(2,\mathbb{R}) = \mathrm{Isom}_{0,+}$. Namely, if $x^+(c)$

denotes the attractive fixed point of a hyperbolic transformation $c \in PSL(2,\mathbb{R})$, l_2 is the line in AdS_3 joining the boundary points $(x^+(\gamma_1), x^+(\gamma_2))$ and $(x^+(\gamma_1^{-1}), x^+(\gamma_2^{-1}))$. On the other hand l_1 is the geodesic dual to l_2, the endpoints of l_1 are $(x^+(\gamma_1), x^+(\gamma_2^{-1}))$ and $(x^+(\gamma_1^{-1}), x^+(\gamma_2))$.

Points of l_1 are fixed by (γ_1, γ_2) whereas it acts by pure translation on l_2. The union of the timelike segments with the past end-point on l_2 and the future end-point on l_1 is a domain Ω_0 in $AdS_{3,+}$ invariant under (γ_1, γ_2). The action of (γ_1, γ_2) on Ω_0 is proper and free and the quotient $M_0(\gamma_1, \gamma_2) = \Omega_0/(\gamma_1, \gamma_2)$ is a spacetime homeomorphic to $S^1 \times \mathbb{R}^2$.

There exists a spacetime with singularities $\hat{M}_0(\gamma_1, \gamma_2)$ such that $M_0(\gamma_1, \gamma_2)$ is isometric to the regular part of $\hat{M}_0(\gamma_1, \gamma_2)$ and it contains a future BTZ-type singularity. Define

$$\hat{M}_0(\gamma_1, \gamma_2) = (\Omega_0 \cup l_1)/(\gamma_1, \gamma_2).$$

To show that l_1 is a future BTZ-type singularity, let us consider an alternative description of $\hat{M}_0(\gamma_1, \gamma_2)$. Notice that a fundamental domain in $\Omega_0 \cup l_1$ for the action of (γ_1, γ_2) can be constructed as follows. Take on l_2 a point z_0 and put $z_1 = (\gamma_1, \gamma_2)z_0$. Then consider the domain P that is the union of a timelike geodesic joining a point on the segment $[z_0, z_1] \subset l_2$ to a point on l_1. P is clearly a fundamental domain for the action with two timelike faces. $\hat{M}_0(\gamma_1, \gamma_2)$ is obtained by gluing the faces of P.

We now generalize the above constructions as follows. Let us fix a surface S with some boundary component and negative Euler characteristic. Consider on S two hyperbolic metrics μ_l and μ_r with geodesic boundary such that each boundary component has the same length with respect to those metrics.

Let $h_l, h_r : \pi_1(S) \to PSL(2,\mathbb{R})$ be the corresponding holonomy representations. The pair $(h_l, h_r) : \pi_1(S) \to PSL(2,\mathbb{R}) \times PSL(2,\mathbb{R})$ induces an isometric action of $\pi_1(S)$ on AdS_3.

In [Bar08a, Bar08b, BKS06] it is proved that there exists a convex domain Ω in $\mathrm{AdS}_{3,+}$ invariant under the action of $\pi_1(S)$ and the quotient $M = \Omega/\pi_1(\Sigma)$ is a strongly causal manifold homeomorphic to $S \times \mathbb{R}$. For the convenience of the reader we sketch the construction of Ω referring to [Bar08a, Bar08b] for details.

The domain Ω can be defined as follows. First consider the *limit set* Λ defined as the closure of the set of pairs $(x^+(h_l(\gamma)), x^+(h_r(\gamma)))$ for $\gamma \in \pi_1(S)$. Λ is a $\pi_1(S)$-invariant subset of $\partial AdS_{3,+}$ and it turns out that there exists a spacelike plane P disjoint from Λ. So we can consider the convex hull K of Λ in the affine chart $\mathbb{RP}^3 \setminus P$.

K is a convex subset contained in $AdS_{3,+}$. For any peripheral loop γ, the spacelike geodesic c_γ joining $(x^+(h_l(\gamma^{-1})), x^+(h_r(\gamma^{-1})))$ to $(x^+(h_l(\gamma)), x^+(h_r(\gamma)))$ is contained in ∂K and $\Lambda \cup \bigcup c_\gamma$ disconnects ∂K into components called the future boundary, $\partial_+ K$, and the past boundary, $\partial_- K$.

One then defines Ω as the set of points whose dual plane is disjoint from K. We have

(1) the interior of K is contained in Ω.
(2) $\partial\Omega$ is the set of points whose dual plane is a support plane for K.
(3) $\partial\Omega$ has two components: the past and the future boundary. Points dual to support planes of $\partial_- K$ are contained in the future boundary of Ω, whereas points dual to support planes of $\partial_+ K$ are contained in the past boundary of Ω.
(4) Let $\mathcal{A}$ be the set of triples (x, v, t), where $t \in [0, \pi/2]$, $x \in \partial_- K$ and $v \in \partial_+\Omega$ is a point dual to some support plane of K at x. We consider the normal evolution map $\Phi : \mathcal{A} \to AdS_{3,+}$, where $\Phi(x, v, t)$ is the point on the geodesic segment joining x to v at distance t from x. In [BB09b] the map Φ is shown to be injective (Figs. 12, 13).

2 2 0 1 3 1 8 B
Jour. No Ms. No.
Dispatch: 3/9/2011
Total pages: 54
Disk Received ☑
Disk Used ☑
Journal: Commun. Math. Phys.
Not Used ☐
Corrupted ☐
Mismatch ☐

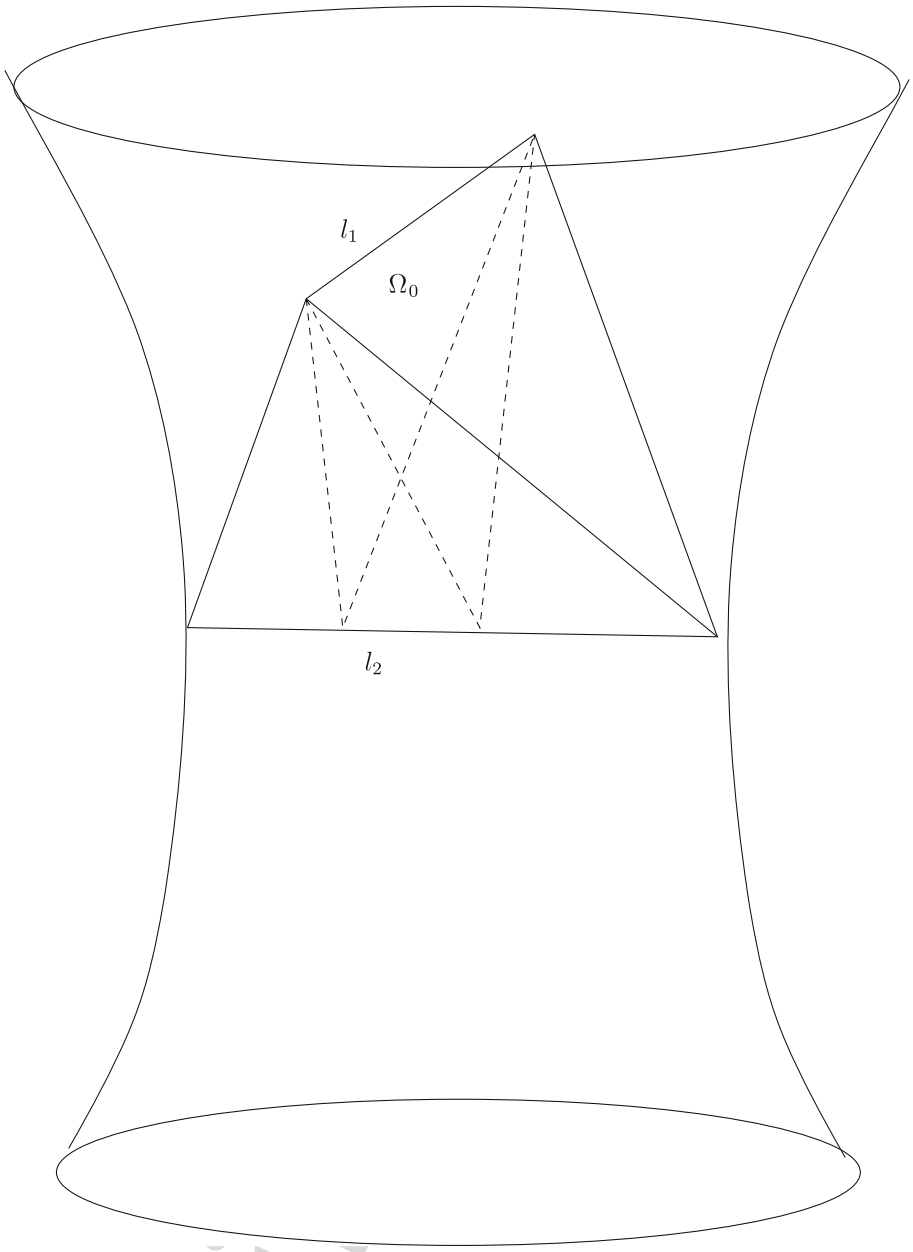

Fig. 12. The region P is bounded by the dotted triangles, whereas $M_0(\gamma_1, \gamma_2)$ is obtained by gluing the faces of P

Proposition 7.9. *There exists a manifold with singularities $\hat{M}$ such that*

(1) The regular part of $\hat{M}$ is M.
(2) There is a future BTZ-type singularity and a past BTZ-type singularity for each boundary component of M.

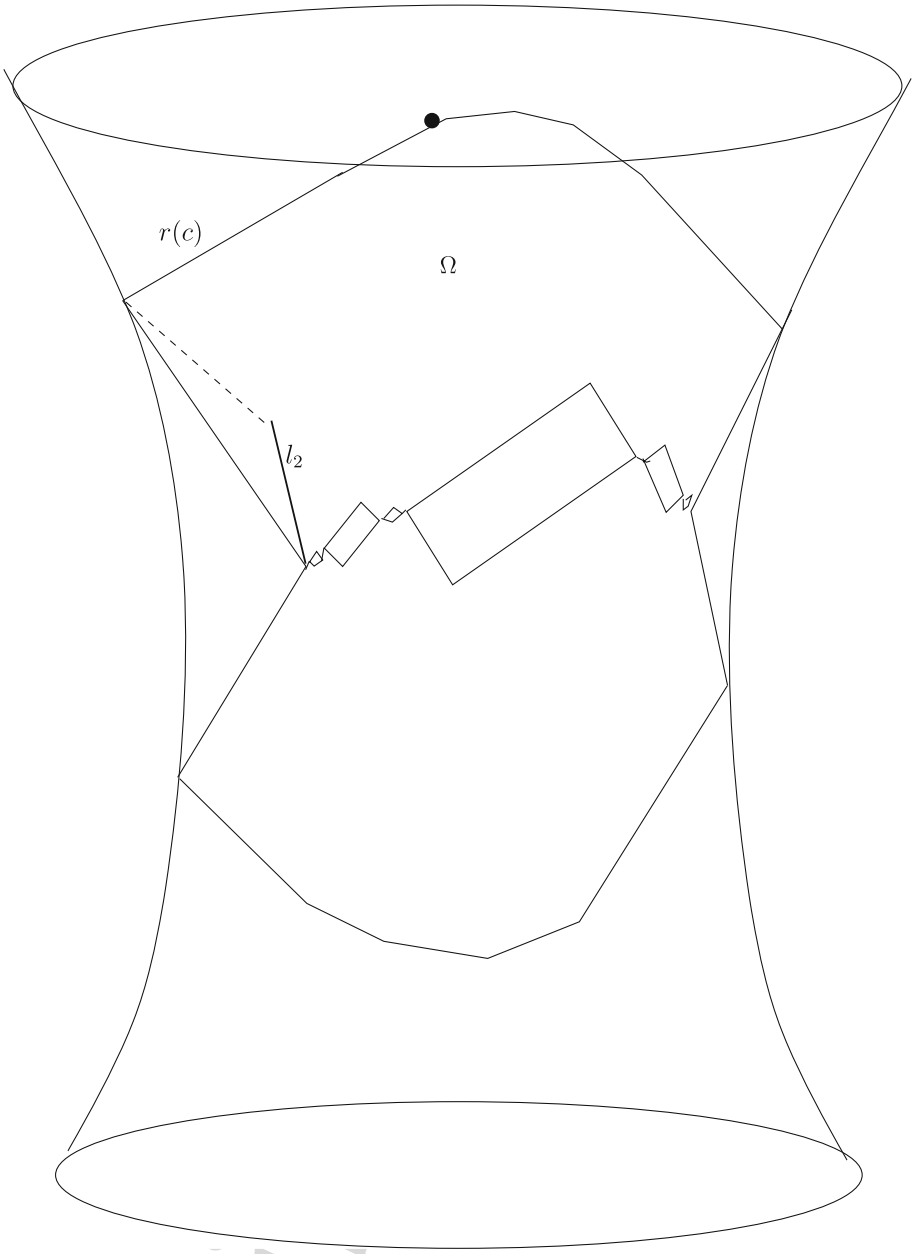

Fig. 13. The segment $r(c)$ projects to a BTZ-type singularity for M

Proof. Let $c \in \pi_1(S)$ be a loop representing a boundary component of S and let $\gamma_1 = h_l(c)$, $\gamma_2 = h_r(c)$.

By hypothesis, the translation lengths of γ_1 and γ_2 are equal, so, as in the previous example, there are two invariant geodesics l_1 and l_2. Moreover the geodesic l_2 is contained in Ω and is in the boundary of the convex core K of Ω. By [BKS06, BB09a], there exists a face F of the past boundary of K that contains l_2. The dual point of such a face,

2 2 0 1 3 1 8 B
Jour. No Ms. No.
Dispatch: 3/9/2011
Total pages: 54
Disk Received ☑
Disk Used ☑
Journal: Commun. Math. Phys.
Not Used ☐
Corrupted ☐
Mismatch ☐

say p, lies in l_1. Moreover a component of $l_1 \setminus \{p\}$ contains points dual to some support planes of the convex core containing l_2. Thus there is a ray $r = r(c)$ in l_1 with vertex at p contained in $\partial_+\Omega$ (and similarly there is a ray $r_- = r_-(c)$ contained in $l_1 \cap \partial_-\Omega$).

Now let $U(c)$ be the union of timelike segments in Ω with past end-point in l_2 and future end-point in $r(c)$. Clearly $U(c) \subset \Omega(\gamma_1, \gamma_2)$. The stabilizer of $U(c)$ in $\pi_1(S)$ is the group generated by (γ_1, γ_2). Moreover we have

- for some $a \in \pi_1(S)$ we have $a \cdot U(c) = U(aca^{-1})$,
- if d is another peripheral loop, $U(c) \cap U(d) = \emptyset$.

(The last property is a consequence of the fact that the normal evolution of $\partial_- K$ is injective – see property (4) before Proposition 7.9.)

So if we put

$$\hat{M} = (\Omega \cup \bigcup r(c) \cup \bigcup r_-(c))/\pi_1(S),$$

then a neighborhood of $r(c)$ in $\hat{M}$ is isometric to a neighborhood of l_1 in $M(\gamma_1, \gamma_2)$, and is thus a BTZ-type singularity (and analogously $r_-(c)$ is a white hole singularity). □

7.4. Surgery on spacetimes containing BTZ-type singularities. Now we illustrate how to get spacetimes $\cong S \times \mathbb{R}$ containing two particles that collide producing a BTZ-type singularity. Such examples are obtained by a surgery operation similar to that implemented in Sect. 7.2. The main difference with that case is that the boundary of these spacetimes is not spacelike.

Let M be a spacetime $\cong S \times \mathbb{R}$ containing a BTZ-type singularity l of mass m and fix a point $p \in l$. Let us consider a HS-surface Σ containing a BTZ-type singularity p_0 of mass m and two elliptic singularities q_1, q_2. A small disk Δ_0 around p_0 is isomorphic to a small disk Δ in the link of the point $p \in l$. (As in the previous section, one can construct such a surface by doubling a triangle in HS^2 with one vertex in the de Sitter region and two vertices in the past hyperbolic region.)

Let B be a ball around p and B_Δ be the intersection of B with the union of segments starting from p with velocity in Δ. Clearly B_Δ embeds in $e(\Sigma)$, moreover there exists a small disk Δ_0 around the vertex of $e(\Sigma)$ such that $e(\Delta_0) \cap B_0$ is isometric to the image of B_Δ in B_0.

Now $\Delta' = \partial B \setminus B_\Delta$ is a disk in M. So there exists a topological surface S_0 in M such that

- S_0 contains Δ';
- $S_0 \cap B = \varnothing$;
- $M \setminus S_0$ is the union of two copies of $S \times \mathbb{R}$.

Notice that we do not require S_0 to be spacelike.

Let M_1 be the component of $M \setminus S_0$ that contains B. Consider the spacetime $\hat{M}$ obtained by gluing $M_1 \setminus (B \setminus B_\Delta)$ to B_0, identifying B_Δ to its image in B_0. Clearly $\hat{M}$ contains two particles that collide giving a BH singularity and topologically $\hat{M} \cong S \times \mathbb{R}$.

References

[ABB+07] Andersson, T., Barbot, T., Benedetti, R., Bonsante, F., Goldman, W.M., Labourie, F., Scannell, K.P., Schlenker, J.M.: Notes on a paper of mess. Geom. Dedicata **126**, 47–70 (2007)

[Ale05] Alexandrov, A.D.: *Convex polyhedra*. Springer Monographs in Mathematics. Berlin: Springer-Verlag, 2005, translated from the 1950 Russian edition by N. S. Dairbekov, S. S. Kutateladze, A. B. Sossinsky, with comments and bibliography by V. A. Zalgaller and Appendices by L. A. Shor and Yu. A. Volkov

[Bar08a] Barbot, T.: Causal properties of AdS-isometry groups. i. causal actions and limit sets. Adv. Theor. Math. Phys. **12**(1), 1–66 (2008)

[Bar08b] Barbot, T.: Causal properties of AdS-isometry groups. ii. BTZ multi-black-holes. Adv. Theor. Math. Phys. **12**(6), 1209–1257 (2008)

[BB09a] Benedetti, R., Bonsante, F.: (2 + 1) Einstein spacetimes of finite type. In: *Handbook of Teichmüller theory*. Vol. II, Volume **13** of *IRMA Lect. Math. Theor. Phys.* Zürich: Eur. Math. Soc., 2009, pp. 533–609

[BB09b] Benedetti, R., Bonsante, F.: Canonical Wick rotations in 3-dimensional gravity. *Mem. Amer. Math. Soc.*, **198**, Providence, RI: Amer. Math. Soc., 2009

[BBES03] Brock, J., Bromberg, K., Evans, R., Souto, J.: Tameness on the boundary and Ahlfors' measure conjecture. Publ. Math. Inst. Hautes Études Sci. **98**, 145–166 (2003)

[BBS09] Barbot, T., Bonsante, F., Schlenker, J.-M.: Collisions of particles in locally AdS spacetimes. http://arXiv.org/abs/0905.1823v1 [math.DG], 2009

[BBS10] Barbot, T., Bonsante, F., Schlenker, J.-M.: Collisions of particles in locally AdS spacetimes II. Moduli of globally hyperbolic spaces. Work in progress, 2010

[BEE96] Beem J.K., Ehrlich P.E., Easley K.L.: *Global Lorentzian Geometry*. New York: Marcel Dekker, 1996

[BKS06] Bonsante, F., Krasnov, K., Schlenker, J.-M.: Multi black holes and earthquakes on Riemann surfaces with boundaries. Int. Math. Res. Not. **2011**(3), 487–552 (2011)

[Bro04] Bromberg, K.: Hyperbolic cone-manifolds, short geodesics, and Schwarzian derivatives. J. Amer. Math. Soc., **17**(4), 783–826 (electronic), (2004)

[BS09a] Bonsante, F., Schlenker, J.-M.: AdS manifolds with particles and earthquakes on singular surfaces. Geom. Funct. Anal. **19**(1), 41–82 (2009)

[BS09b] Bonsante, F., Schlenker, J.-M.: Fixed points of compositions of earthquakes. http://arXiv.org/abs/0812.3471v3 [math.GT], 2010

[BS10] Bonsante, F., Schlenker, J.-M.: Maximal surfaces and the universal Teichmüller space. Invent. Math. **182**(2), 279–333 (2010)

[BTZ92] Bañados, M., Teitelboim, C., Zanelli, J.: Black hole in three-dimensional spacetime. Phys. Rev. Lett. **69**(13), 1849–1851 (1992)

[Car03] Carlip, S.: *Quantum Gravity in 2+ 1 Dimensions*. Cambridge: Cambridge University Press, 2003

[CFGO94] Carroll, S.M., Farhi, E., Guth, A.H., Olum, K.D.: Energy-momentum restrictions on the creation of gott time machines. Phys. Rev. D **50**, 6190–6206 (1994)

[DS93] Deser, S., Steif, A.R.: No Time Machines from Lightlike Sources in 2 + 1 Gravity. In: B. L. Hu, M. P. Ryan Jr., C. V. Vishveshwara, Ed., *Directions in General Relativity: Papers in Honor of Charles Misner, Volume 1*, 1993, Cambridge: Cambridge Univ. Press, 2005, p. 78ff

[Ger70] Geroch, R.: Domain of dependence. J. Math. Phys. **11**(2), 437–449 (1970)

[GL98] Gott, J.R., Li-Xin, Li.: Can the universe create itself? Phys. Rev. Lett. **58**(2), 02351 (1998)

[Gol10] Goldman, W.M.: Locally homogeneous geometric manifolds. In: Proceedings of the International Congress of Mathematicians (Hyderabad, India, 2010), New Delhi: Hindustan Boook Agency, 2010, pp. 717–744 also available at http://arXiv.org/abs/1003.2759v2 [mathDG], 2010

[Got91] Gott, J.R.: Closed timelike curves produced by pairs of moving cosmic strings: exact solutions. Phys. Rev. Lett. **66**(2), 1126–1129 (1991)

[Gra93] Grant, J.D.E.: Cosmic strings and chronology protection. Phys. Rev. D **47**, 2388 (1993)

[HE73] Hawking, S.W., Ellis, G.F.R.: *The large scale structure of space-time*. Cambridge Monographs on Mathematical Physics, No. 1. London: Cambridge University Press, 1973

[HK98] Hodgson, C.D., Kerckhoff, S.P.: Rigidity of hyperbolic cone-manifolds and hyperbolic Dehn surgery. J. Diff. Geom. **48**, 1–60 (1998)

[HM99] Holst, S., Matschull, H.J.: The anti-de Sitter Gott universe: a rotating BTZ wormhole. Class. Quant. Grav. **16**(10), 3095–3131 (1999)

[KS07] Krasnov, K., Schlenker, J.-M.: Minimal surfaces and particles in 3-manifolds. Geom. Dedicata **126**, 187–254 (2007)

[Mes07] Mess, G.: Lorentz spacetimes of constant curvature. Geom. Dedicata **126**, 3–45 (2007)

[MM] Mazzeo, R., Montcouquiol, G.: Infinitesimal rigidity of cone-manifolds and the Stoker problem for hyperbolic and Euclidean polyhedra. J. Diff. Geom. **37**(3), 525–576 (2011)

[Sch98] Schlenker, J.-M.: Métriques sur les polyèdres hyperboliques convexes. J. Diff. Geom. **48**(2), 323–405 (1998)

[Sch01] Schlenker, J.-M.: Convex polyhedra in Lorentzian space-forms. Asian J. Math. **5**(2), 327–363 (2001)

[Ste94] Steif, A.R.: Multiparticle solutions in 2+1 gravity and time machines. Int. J. Mod. Phys. D **3**(1), 277–280 (1994)

2	2	0	1	3	1	8	B
Jour. No			Ms. No.				

Dispatch: 3/9/2011
Total pages: 54
Disk Received ☑
Disk Used ☑

Journal: Commun. Math. Phys.
Not Used ☐
Corrupted ☐
Mismatch ☐

[tH93] 't Hooft, G.: The evolution of gravitating point particles in 2 + 1 dimensions. Class. Quant. Grav. **10**(5), 1023–1038 (1993)

[tH96] 't Hooft, G.: Quantization of point particles in (2 + 1)-dimensional gravity and spacetime discreteness. Class. Quant. Grav. **13**(5), 1023–1039 (1996)

[Thu98] Thurston, W.P.: Shapes of polyhedra and triangulations of the sphere. Geom. Topo. Mono. **1**(1), 511–549 (1998)

[Wei] Weiss, H.: The deformation theory of hyperbolic cone-3-manifolds with cone-angles less than 2π. http://arXiv.org/abs/0904.4568v2 [math.DG], 2009

Communicated by P.T. Chruściel