View metadata, citation and similar papers at core.ac.uk

brought to you by CORE

provided by Open Archive Toulouse Archive Ouverte

OATAO

Open Archive Toulouse Archive Ouverte

Open Archive Toulouse Archive Ouverte

OATAO is an open access repository that collects the work of Toulouse researchers and makes it freely available over the web where possible

This is an author's version published in: http://oatao.univ-toulouse.fr/21181

To cite this version:

Le Maitre Gonzalez, Esteban and Desforges, Xavier and Archimède, Bernard *Assessment method of the multicomponent systems future ability to achieve productive tasks from local prognoses.* (2018) Reliability Engineering and System Safety, 180. 403-415. ISSN 0951-8320

Any correspondence concerning this service should be sent to the repository administrator: tech-oatao@listes-diff.inp-toulouse.fr

Assessment method of the multicomponent systems future ability to achieve productive tasks from local prognoses

Esteban Le Maitre González[a,b], Xavier Desforges[b,*], Bernard Archimède[b]

[a] Instituto Tecnológico de Costa Rica, Cartago, Costa Rica
[b] Laboratoire Génie de Production Université de Toulouse, INP-ENIT, Tarbes 65016, France

Keywords:
Reliability
Uncertainty
Dempster Shafer Theory
Bayesian networks
Prognostics
Decision support

A B S T R A C T

Conditioned-based maintenance and prognostics and health management enable to optimize maintenance by scheduling the necessary repairs and replacements of technical system components according to their present and future health states. The assessment of future health states is the prognostics and health management keystone. Many technical production systems are made of numerous components implementing their functions. A method to assess the ability of multicomponent systems to carry out future production tasks is proposed to provide decision supports for production and maintenance planning for a better compromise between their objectives. It is based on components prognoses. To handle inherent uncertainties of these prognoses, the method is based on the Dempster Shafer theory and Bayesian networks inferences. Local prognoses are categorized and transformed to be compliant to Dempster Shafer theory. Patterns of systems are identified for which inferences are defined. The patterns are then used to model systems and to assess their abilities to achieve future tasks. An identification of components that should first undergo maintenance is proposed. An example implementing a fictitious complex systems is presented to show how the provided decision supports can be used for production and maintenance planning purposes.

1. Introduction

Facing to always more competitive markets, companies invest in or develop complex technical resources for production of goods or services to improve their flexibility and their responsiveness. Therefore, the production resources become more costly. In such a context, the costly technical resources must comply the highest standards of dependability not only to satisfy return over invest criteria but also to reduce the risk of accidents causing damages to goods, people and environment. Reliability studies of such technical resources or systems are of course a major issue as well as maintaining them in operational condition with the highest level of availability for the lowest cost.

Nevertheless, the complexity of systems is always increasing. Indeed, to be more flexible and responsive, the technical systems implement more functionalities many components bring into operation. Because of the variety of functions, components and their technologies, the number of failures that must be considered is increasing too. The reliability assessment of multicomponent systems is to be considered not only at exploitation stage but also at design stage.

During the exploitation stage, high standards of availability and dependability of the technical production systems can be reached thanks to the implementation of Condition-Based Maintenance (CBM) and, more recently, of Prognostics and Health Management (PHM) recommendations while reducing maintenance costs [1–3]. CBM consists in scheduling the necessary repairs and maintenance of technical production resources from the assessment of their current conditions before their failures. If PHM also consists in scheduling maintenance action before the failure of the systems, it aims at assessing the future conditions (future health) of the systems often leading to the assessments of their durations of use before their failures. This estimated time to failure is commonly called Remaining Useful Life (RUL) [4,5].

To make the prognoses of technical systems possible, it is necessary to predict failures of their components. In the domain of PHM, many works deal with techniques for component prognosis. They contribute to assess RULs of components, to improve the RUL assessment accuracy or to predict how degradations will evolve with time [6–10]. For this purpose, three approaches can be considered: experience-based prognostics, model-based prognostics and data-driven prognostics [11]. Those studies consider different kinds of components such as ball-bearings [4,12], gear trains [10,13], braking systems [14], batteries [7,8,15], gas turbines [16], *etc.*, but also structural parts to predict crack growth [17,18]. Some studies aim at more generic approaches

Corresponding author.
E-mail address: xavier.desforges@enit.fr (X. Desforges).

such as the one proposed by Prakash et al. in [19] which is also among the few approaches applied to electrical systems. However, the failure prognosis of a component is a prediction and the provided estimates are not just a scalar number. More often this prediction provides sets of data dealing either with reaching failure thresholds during a given time of use or with remaining times before reaching failure thresholds. For such predictions uncertainty indicators are needed like the characteristics of distributions for probabilistic prognoses [8,10,16,20–22]. The review, made by Liao and Köttig in [15], of RUL predictions of engineered systems shows that the characterization of uncertainties about the prediction of RUL is at least as important their precision.

Therefore, the prognosis of a multicomponent system consists in combining or inferring the data provided by the prognostic functions of components, then called "local prognoses". Formalisms like Markov chains and Bayesian Networks (BNs) and their derivatives enable to model the relationships between probabilities and to compute combinations of conditional probabilities. In these formalisms, the degradation levels are more often represented by different states defined by a physical reality whereas the transitions between states occur stochastically [23]. Those discrete formalisms were successfully implemented in the domain of prognostics for RUL assessment of components [4,8,12,14,16,24]. The modeling of complex systems for reliability analyses by the means of BNs or their derivatives have been developed for the optimization of predictive maintenance or to assess maintenance strategies [25–27]. Certa et al. in [28] propose an approach for the risk assessment in Failure Mode, Effects and Criticality Analysis (FMECA) of systems based on expert knowledge that takes into account vagueness, conflict, and epistemic uncertainty of experts' opinions. However, the notion of prognosis is not required at the design stage when FMECA are led. Muller et al. in [29] propose the deployment of a prognostic process within a tele-maintenance platform. This integration into the platform is done component by component and provides a decision support for maintenance planning from the health conditions of the components but it does not assess the dependability of the system while performing the planned tasks. Voisin et al. in [30] define a generic prognostic business process but they do not describe the process that combines the RULs and their imprecisions in order to provide the system prognosis although they mention its interests.

As far as we know, very few research works deal with the prognostic of complex systems from the prognostics of their components and/or their structures. Among these works there is the one proposed by Zaidan et al. in [16]. They propose a prognostic method based on Bayesian hierarchical model for a gas turbine engine considered as a complex system. However, it consists in determining the RUL and its distribution of the engine that can be considered as a component at the aircraft scale and there is not any consideration about the different functions implemented by the engine. Feng et al. in [20] consider local prognostics to assess fulfilment probabilities of the future planned tasks (flights) assigned to systems (aircrafts). But, the systems are considered as sets of line replaceable modules (components) for which RULs are known. An aircraft is considered as failed as soon as one of its line replaceable modules fails. If these considerations are convenient to test an optimization method for CBM, they are not relevant in terms of health assessment of the complex system that an aircraft is. A multicomponent system modeling based on object-oriented Bayesian networks is proposed in [31]. It computes decision supports for maintenance management and production planning from the components prognoses. These decision supports consist of the failure probabilities of the system functions while performing the planned tasks and of the components to maintain. The works presented in [20,31] assume that the local prognoses provide known probabilistic distribution of RULs or of the degradations after given periods of use making possible the computation of conditional probabilities. The proposal presented in [31] is a method to assess the ability of systems to fulfil future planned tasks and to provide indicators to optimize or to improve not only the CBM like in [20] but production planning too.

However, the distributions of RULs or of the degradations after given periods of use are not always identified but works dealing with prognostics of components often provide identifications of intervals for the assessed RULs or degradations [4,14,32]. These intervals introduce uncertainty between two possibilities: the degradation is under the failure threshold, the degradation is over the failure threshold. This uncertainty is probabilistic, if a distribution is identified; but it can contain a part of epistemic uncertainty if an envelope of probability distribution is determined [22]. That is why, the improvement of precision of RUL predictions and the characterization of uncertainty about these predictions are still major stakes in the field of PHM. Therefore, there is a need to manage such uncertainties about local prognoses to implement prognostic functions for multicomponent systems. Therefore, both aleatory and epistemic uncertainties have to be handled to assess multicomponent systems future ability to achieve productive tasks from the local prognoses.

Nevertheless, the interests of the technical systems prognoses do not only consist in providing decision supports for maintenance management as it is often presented in studies dealing either with systems prognoses or with system reliability [20,25–27,29,30]. Considering that production and maintenance should be planned jointly in order to improve more global performance indicators than the ones only dedicated to maintenance management [33–35], the technical systems prognoses should also provide decision supports for production planning. Therefore, technical systems should not only be considered as arrangements of components but also as providers of functions solicited by production tasks [31]. Thus, decision support indicators dealing with the abilities of system functions to carry out productive tasks are useful for production management in the decision making process leading to the production tasks scheduling. Production management can so planned tasks under an acceptable threshold of occurrence of failures during their achievements. Production and maintenance management must define this threshold. When this threshold is exceeded, it is interesting for maintenance management to know the components to maintain in order to prepare the repairs and to determine downtimes.

The developed approach consists in providing decision support indicators for production and maintenance management in order to enable the scheduling of productive tasks and maintenance actions on a multicomponent system according to its future health status assessed from the prognoses of its components. Since the local prognoses may provide data with indications about both aleatory and epistemic uncertainties, the proposed method to assess the future abilities of multicomponent systems to carry out productive tasks implements the Dempster Shafer theory by the means of BN inferences. After this introduction, the paper begins with the presentation of theoretical elements. Then, a classification of the local prognoses is defined from the data they provide and associated uncertainties. It is based on the literature review partially done in this introduction. For each kind of local prognoses, pre-processes are defined to be used as inputs by the assessment method. To assess the future ability of a given multicomponent system to carry out productive tasks, its modeling is necessary. For this modeling, patterns are identified that can then be used to model systems. For each identified pattern, inferences are defined from which the decision support indicators are computed. The assessment method enable at each level of the system (subsystems, functions, components) to provide indicators, more dedicated to production management than to maintenance management, about the ability of the subsystems, functions or components to achieve the planned productive tasks. A method to identify the component that should first undergo maintenance to improve the ability of every subsystem, function or component to carry out the productive tasks is also proposed by the means of an example. The identified components provide decision supports for maintenance management to prepare repairs and to define downtimes. Finally, the proposal is applied to a fictitious multicomponent system and different scenarios are proposed to show the results it provides and how these indicators can be used by maintenance

and production planning.

2. Theoretical elements

Prognosing a technical system consists in assessing its ability to carry out future productive tasks. This assessment corresponds to the study of the system future reliability. Formalisms enable the reliability study of multicomponent systems such as Markov chains, BNs and their derivatives. Using Markov chains requires the identification of all the states of the system: its nominal state and all its degraded states too. In the case of components, this only leads to identify few states but, when the system is made of several components, each state of each component are combined with states of other components to determine the state of the system. Therefore, when systems are made of numerous components, the number of states becomes too high to be manageable because the transitions between states and their rates have to be identified too [36]. BNs and their derivatives are more implemented for studying the reliability of complex systems (e.g. to optimize predictive maintenance or to assess maintenance strategies) [25–27]. BNs consist of directed acyclic graphs leading to the computation of conditional probabilities according to the arcs, the types of vertices for which the inferences are defined [37]. In BNs states that are equivalent can be fused [36]. The inferences are used to compute the conditional probabilities of being in given states form the probabilities of being in states from which the given states are reachable [37].

Markov chains and BNs only handle probabilistic uncertainty whereas the study of works dealing with the prognoses of components also shows that these prognoses can also provide data containing epistemic uncertainty about the predictions of RULs or failures [4,14,22,32]. The Dempster Shafer Theory (DST), also known as theory of evidence, is a mathematical framework for the representation of the epistemic uncertainty [28]. It enables the handling of aleatory (probabilistic) uncertainty and epistemic uncertainty that is generally due to a lack of knowledge about the system or process [28,38,39]. According to Denœux and Ben Yaghlane in [40], "the DST is now widely accepted as a rich and flexible framework for representing and reasoning with imperfect information". Indeed, it combines logical and probabilistic approaches to uncertainty. It encompasses the set-membership and probabilistic frameworks as special cases. It also enables the representation of weak knowledge and ignorance [41]. This is particularly interesting while processing from local prognoses. Thus, the DST offers a suitable frame to assess the ability of system ability to carry out future productive tasks from local prognoses.

Let us consider an uncertain variable Ω as a set containing a finite number n of distinct states called frame of discernment $\Omega = \{\omega_1, \omega_2, ..., \omega_n\}$ where ω_i denotes one particular state Ω can be. Let us also consider the power set of Ω noted 2^{Ω} the set of all the subsets made from Ω such as $2^{\Omega} = \{\emptyset, \{\omega_1\}, \{\omega_2\}, ..., \{\omega_n\}, \{\omega_1, \omega_2\}, \{\omega_1, \omega_3\}, ..., \Omega\}$ where $\emptyset$ denotes the empty set. The DST defines three quantities that are the *basic belief assignment* (*bba*), also known as basic probability assignment or mass of belief, the *belief* (*Bel*) and the *plausibility* (*Pl*). The *bba* is the amount of knowledge associated with every subset $\varepsilon_i \in 2^{\Omega}$ and it is denoted by $bba(\varepsilon_i)$ [28,42]. It measures the belief exactly assigned to ε_i and represents how strongly the evidence supports ε_i. Each element $\varepsilon_i \in 2^{\Omega}$ having a $bba(\varepsilon_i) > 0$ is called focal element of 2^{Ω}. On *bbas*, the following assumptions hold:

- $bba(\varepsilon_i)$: $2^{\Omega} \rightarrow [0, 1]$,
- $bba(\emptyset) = 0$,
- $\sum_{\varepsilon_i \in 2^{\Omega}} bba(\varepsilon_i) = 1.bba(\emptyset) = 0$ means there is no possibility for an uncertain variable to be in a state that is not in the frame of discernment. If $\sum_{\varepsilon_i \in 2^{\Omega}, |\varepsilon_i|=1} bba(\varepsilon_i) = 1$, the distribution is said dogmatic and corresponds to a probabilistic distribution. If $bba(\varepsilon_i) \neq 0$ and $|\varepsilon_i| > 1$, this denotes the epistemic uncertainty, i.e. the part of complete ignorance, for Ω of being in one the states $\omega_j \in \varepsilon_i$.

The *belief* is the sum of all the *bbas* of the subsets ε_k of the set of interest ε_i; thus:

$$Bel(\varepsilon_i) = \sum_{\varepsilon_k \subseteq \varepsilon_i} bba(\varepsilon_k) \tag{1}$$

The *plausibility* is the sum of all the sets ε_k that intersect with the set of interest ε_i; thus:

$$Pl(\varepsilon_i) = \sum_{\varepsilon_k \cap \varepsilon_i \neq \emptyset} bba(\varepsilon_k) \tag{2}$$

Let us $\overline{\varepsilon_i}$ denotes the complement of ε_i, the *plausibility* and the *belief* are related by $Pl(\varepsilon_i) = 1 - Bel(\overline{\varepsilon_i})$.

$Bel(\varepsilon_i)$ is the exact support to ε_i, i.e. the belief of the hypothesis ε_i is true and $Pl(\varepsilon_i)$ is the possible support to ε_i, i.e. the total amount of belief that could be potentially placed in ε_i [28]. $[Bel(\varepsilon_i), Pl(\varepsilon_i)]$ is the interval of support of ε_i. The difference $Pl(\varepsilon_i) - Bel(\varepsilon_i)$ is the ignorance associated to ε_i. $Bel(\varepsilon_i)$ and $Pl(\varepsilon_i)$ can respectively be considered as the lower limit and the upper limit of the exact probability at which ε_i is supported [28].

The DST is particularly used to fuse data coming from different sources observing the same situation or experts' opinions like in [28]. Proposals to combine or to aggregate those data have been presented by different contributors among them: Dempster, Smets, Dubois and Prade [43].

However, in the case of the assessment of the future health of multicomponent systems, the sources are the local prognoses. They are implemented, in the better cases, for predicting the occurrence of one failure mode of a component and more often for predicting the failure of a component when they are implemented. Otherwise, the results of reliability studies aiming at determining the Mean Time To Failure (MTTF) or the Mean Time Between Failure (MTBF) of components should be used [31]. Therefore, the local prognoses observe different situations and every local prognosis is considered as the unique source of observation of one particular situation. Therefore their combinations should be done differently.

The generalized Bayes theorem, developed in [43], generalizes the transferable belief model which is a development of the DST [44]. It makes the handling of epistemic uncertainty possible in belief networks binding hypotheses featured by *bbas* [45]. Using this ability, Simon et al. in [46,47] propose an interesting approach enabling to implement the DST by the use of BN inferences for reliability analysis of complex systems. They apply their approach to fault trees and reliability diagrams and they identify three patterns: serial structures or "AND" gates, parallel structures or "OR" gates and "k/n" gates that are also parallel structures failing if less than k entities upon n entities are operational. In this approach, the *bbas* are considered as probabilities on which BN inferences can be applied. They propose inferences for each pattern. Those inferences can be represented by the means of grids from the elements of the power sets of two frames of discernment Ω_x and Ω_y, to the elements of a third frame of discernment Ω_z. The generalized inference grid is shown in Table 1 where I_{ij} is one of the sets $\varepsilon_{zk} \in 2^{\Omega_z}$ that may be present several times in the grid.

The *bba* of each $\varepsilon_{zk} \in 2^{\Omega_z}$, considered as a conditional *bba*, is computed from the relation (3).

Table 1
Generalized inference grid.

2^{Ω_x}	2^{Ω_y}			
	ε_{y1}	ε_{y2}	⋯	ε_{yn}
ε_{x1}	I_{11}	I_{12}	⋯	I_{1n}
ε_{x2}	I_{21}	I_{22}	⋯	I_{2n}
⋮	⋮	⋮	⋱	⋮
ε_{xm}	I_{m1}	I_{m2}	⋯	I_{mn}

$$bba(\varepsilon_{zk}) = \sum_{i=1}^{i=m}\sum_{j=1}^{j=n}\begin{cases} bba(\varepsilon_{xi}).\ bba(\varepsilon_{yj}), & I_{ij} = \varepsilon_{zk} \\ 0, & I_{ij} \neq \varepsilon_{zk} \end{cases} \quad (3)$$

Then the belief and the plausibility of each $\varepsilon_{zk} \in 2^{\Omega_z}$ can respectively be computed from (1) and (2).

However Simon et al. in [46,47] only consider frames of discernment made of two states "Up" and "Down". This may be insufficient regarding the aim to provide decision support indicators for production and maintenance planning. Indeed, more states are considered for the entities presented in the modeling based on object oriented BN in [31]. The proposal exposed in this paper consists of the development of the inferences proposed in [46,47] and of their implementations in the modellng proposed in [31]. The computations have the local prognoses as inputs and the outputs are decision supports computed from the *bbas* of each element of the power set of the frame of discernment of each entity of the modeled multicomponent system. The local prognoses must be pre-processed to be handled by the proposed computations.

3. Local prognoses

In the domain of PHM, the prognostic activity consists of the accurate assessment of the RULs of components of a system [3,9]. This mainly consists in assessing, with a given probability, the duration of use of a component before it fails as this is illustrated in Fig. 1 where t_0 is the current duration of use of the component [5]. In this case, the local prognosis ideally provides a Probability Density Function (PDF) or a Cumulative Probability Distribution Function (CPDF) like in [6–8,10]. If, for different possible reasons (place, weight, cost…), there is not any local prognosis, PDF or CPDF of component failure depending on its uses (duration or number of cycles) can be exploited. These PDFs and CPDFs can be obtained thanks to statistical studies led by the component suppliers in order to define the probabilities of elementary failures [48], the MTTF and the MTBF of the components. These two situations are illustrated for PDFs in Fig. 2 where t_0 is the current duration of use, and also the date at which the local prognosis is computed, and $t_1 - t_0$ is the duration of the planned tasks.

In these two situations, the probability of failure before t_1, noted $p_F(t_1)$, can be determined knowing that the probability of reaching the failure threshold is considered as a failure. Therefore, considering the frame of discernment of a local prognosis $P = \{F, \overline{F}\}$ made of the two states: F that stands for failed and $\overline{F}$ that stands for not failed, the distribution of *bbas* on the elements of $2^P = \{\varnothing, \{F\}, \{\overline{F}\}, \{F, \overline{F}\}\}$ is dogmatic. Let us note that, when $bba(\varepsilon)$ is time dependent, it is noted $bba_\varepsilon(t)$ where t is the time at which this *bba* is considered. But the notation $bba(\varepsilon)$ is also be used when all the *bbas* are considered at the same time. Therefore, the dogmatic distribution is: $bba_{\{F\}}(t_1) = p_F(t_1)$, $bba_{\{\overline{F}\}}(t_1) = 1 - p_F(t_1)$, $bba_{\{F,\overline{F}\}}(t_1) = 0$.

However, the probability of failure cannot always be computed for a given duration of use from the data the local prognosis provides. Indeed, the local prognosis can provide data with epistemic uncertainty. The local prognoses can provide two kinds of data containing epistemic uncertainty. The first kind of data consists of an interval varying with the duration of use in which the probability of failure is with a trust α such as the results presented in [22]. This interval can be defined by an upper CPDF and a lower CPDF as shown in Fig. 3 where $p_{lowF}(t_1)$ denotes the lower probability of failure before t_1 with an error probability $\frac{\alpha}{2}$ computed by the local prognosis at t_0 and $p_{upF}(t_1)$ denotes the upper probability of failure before t_1 with an error probability $\frac{\alpha}{2}$ computed by the local prognosis at t_0 too. Therefore, the distribution of *bbas* on the elements of 2^P is: $bba_{\{F\}}(t_1) = p_{lowF}(t_1) - \frac{1-\alpha}{2}$, $bba_{\{\overline{F}\}}(t_1) = \frac{1+\alpha}{2} - p_{upF}(t_1)$, $bba_{\{F,\overline{F}\}}(t_1) = p_{upF}(t_1) - p_{lowF}(t_1) + 1 - \alpha$.

The second kind of data consists of an interval the local prognosis assesses at t_0 noted $[RUL_{min}, RUL_{max}]$ in which the real RUL is with the given probability α [4,12,14,32]. Without any other indication about the distribution of the RUL, three situations are considered.

- The first situation is when $t_1 - t_0 < RUL_{min}$ for which the proposed distribution of the *bbas* on the elements of 2^P is $bba_{\{F\}}(t_1) = 0$, $bba_{\{\overline{F}\}}(t_1) = \alpha$, $bba_{\{F,\overline{F}\}}(t_1) = 1 - \alpha$. Indeed, as the probability of occurrence of the failure between RUL_{min} and RUL_{max} is α, thus the maximum probability of failure before RUL_{min} is $1 - \alpha$ but it may be less because of the lack of information about the distribution of the RUL (this is translated by the *bba* assigned to $\{F, \overline{F}\}$) and so the minimum probability of the non–occurrence of failure before RUL_{min} is α.
- The second situation is when $t_1 - t_0 > RUL_{max}$ for which the proposed distribution of the *bbas* on the elements of 2^P is $bba_{\{F\}}(t_1) = \alpha$, $bba_{\{\overline{F}\}}(t_1) = 0$, $bba_{\{F,\overline{F}\}}(t_1) = 1 - \alpha$. Indeed, as the probability of occurrence of the failure between RUL_{min} and RUL_{max} is α, thus the minimum probability failure will occur before $t_1 > RUL_{max} + t_0$ is α but it may be more because of the lack of information about the distribution of the RUL (this is translated by the *bba* assigned to $\{F, \overline{F}\}$) and so the minimum probability of the non–occurrence of failure before RUL_{min} is α.
- The third situation is when $RUL_{min} \leq t_1 - t_0 \leq RUL_{max}$ for which the proposed distribution of the *bbas* on the elements of 2^P is $bba_{\{F\}}(t_1) = 0$, $bba_{\{\overline{F}\}}(t_1) = 0$, $bba_{\{F,\overline{F}\}}(t_1) = 1$. Indeed, the probability of occurrence of the failure between RUL_{min} and RUL_{max} is α. This explains the *bba* assigned to $\{F, \overline{F}\}$ is at least α. Nevertheless, the probability the failure occurs outside the interval $[RUL_{min}, RUL_{max}]$ is $1 - \alpha$ but, because of the lack knowledge about the distribution of the RUL, it is not possible to have an idea of how to distribute this remaining *bba* between the states F and $\overline{F}$. This also corresponds to an epistemic uncertainty between the states F and $\overline{F}$. That is why the

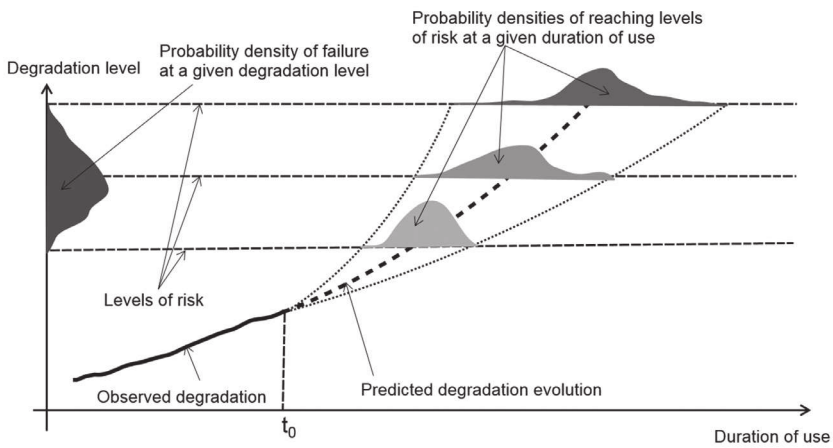

Fig. 1. Probability densities associated to RUL [5].

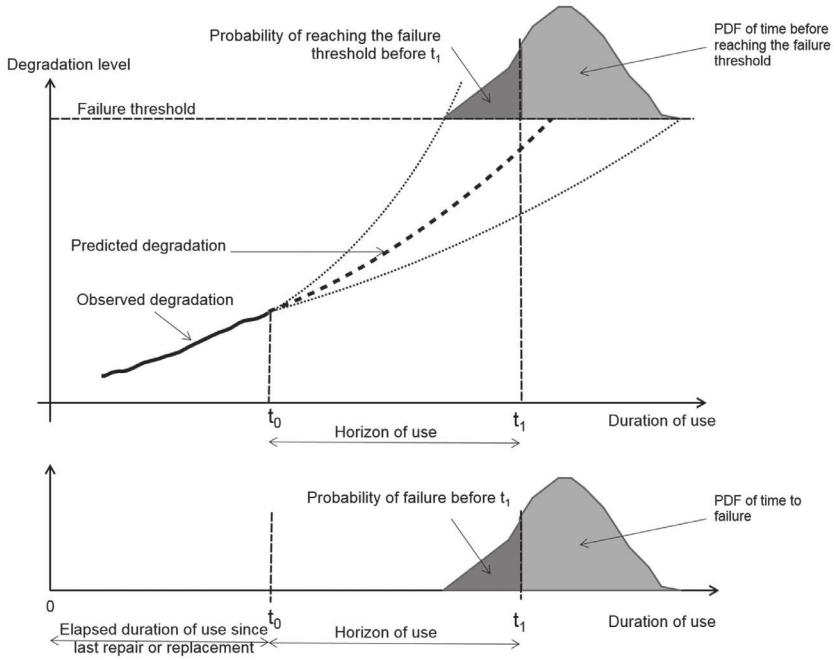

Fig. 2. PDFs of the predictions of degradations and of the time to failure.

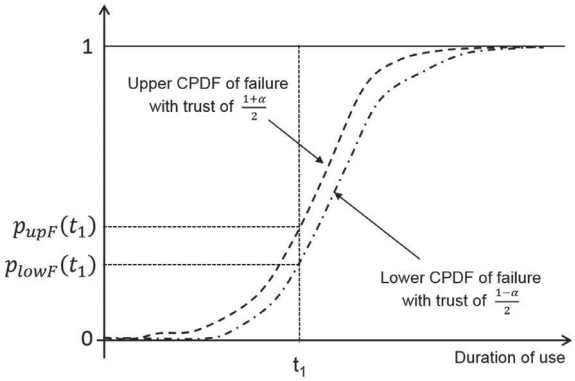

Fig. 3. Distribution of *bbas* defined from upper CPDF and a lower CPDF of failure.

remaining belief mass $1-\alpha$ is also assigned to $\{F, \overline{F}\}$.

Table 2 summarizes the distributions of the *bbas* on the frame of discernment 2^P of a local prognosis according to the identified types of data provided by the local prognostics.

Local prognoses with epistemic uncertainty seem to be very penalizing for the assessment of the future reliability. Nevertheless, the assessments of intervals with very high trust α improve the belief in $\overline{F}$ state although they increase the widths of the intervals. Many works show that these widths are decreasing when t_0, the date at which the local prognoses are computed, is getting close to the date at which failures occur [4,12,14,22,32].

To assess at t_0 the multicomponent system ability to carry out the planned productive tasks that will end at t_e the local prognostics must be computed from the duration the planned tasks will solicit the components in order to define the values of t_1. for the local prognoses. Nevertheless, the duration of use is not always the best indicator for RULs. Indeed, in some cases the number of cycles is more relevant [7,14,32]. In these cases, the duration of use must be converted into number of cycles. The local prognoses may also require the severity with which the planned tasks will solicit the components that may be introduced thanks to parameters [14]. The durations of uses and the severities can be anticipated by production planning that assigns tasks to systems. Once the local prognoses are determined, the data they provide are used to define their distributions of *bbas* at t_e on 2^P according to Table 2. Therefore, a local prognosis:

- that is of probability type contains the value of $p_F(t_e)$,
- that is of interval of probability type contains the values $p_{upF}(t_e)$, $p_{lowF}(t_e)$, and α,
- that is of trust interval type contains the values RUL_{min}, RUL_{max} and

The next stage consists in computing the decision supports for production and maintenance planning from the *bbas* of each set of the power set of the frame of discernment of each entity of the modeled multicomponent system. This computation requires the modeling of the multicomponent system and the definition of inferences. Then in order to simplify the notations, the terms t_1 and t_e are not used any more. Indeed, all the quantities are computed for the date t_e at which the

Table 2
Distributions of the *bbas* according to data provided by the local prognosis.

Distribution at t_1 of *bbas* on 2^P	Probability	Interval of probability	Trust interval		
			$t_1 - t_0 < RUL_{min}$	$RUL_{min} \le t_1 - t_0 \le RUL_{max}$	$t_1 - t_0 > RUL_{max}$
$bba_{\{F\}}(t_1)=$	$p_F(t_1)$	$p_{lowF}(t_1) - \frac{1-\alpha}{2}$	0	0	α
$bba_{\{\overline{F}\}}(t_1)=$	$1 - p_F(t_1)$	$\frac{1+\alpha}{2} - p_{upF}(t_1)$	α	0	0
$bba_{\{F,\overline{F}\}}(t_1)=$	0	$p_{upF}(t_1) - p_{lowF}(t_1) + 1 - \alpha$	$1-\alpha$	1	$1-\alpha$

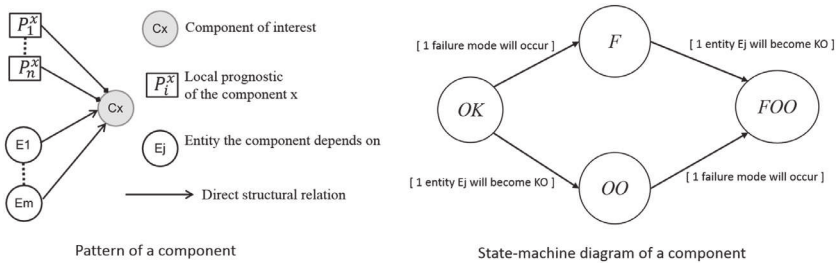

Fig. 4. Pattern and state-machine diagram of a component.

planned productive tasks will end.

4. Multicomponent system modeling and inferences

Systems engineering aims at designing technical systems that implement specified services and satisfy constraints and desired performances at lower costs [49]. That is why, the design of a prognostic function for a multicomponent system should be considered at the design stage [33]. Model Based Systems Engineering (MBSE) provides modeling supports for systems engineering such as SysML (System Modeling Language) [50]. The different diagrams enable the identification of relationships between components, functions and data, energy and material flows. Diagrams, like parametric, sequence, and state-machine diagrams in SysML, model dynamic behaviors of the systems. These models gather structural, functional and behavioral knowledge necessary to implement a prognostic function for a system [30]. The functional knowledge can be extracted from the hierarchical view which breaks down a system into subsystems, then into functions, then into multiple levels of sub-functions till components implementing one or more sub-functions [49]. The structural knowledge is obtained from the direct interactions between entities (components or functions) and their failure modes mainly in order to propagate their effects [51]. For this purpose, MBSE diagrams can be used like, with SysML, the internal blocks diagrams, activity diagrams that represent material, energy and data flows that are used, produced, transformed and exchanged by functions and components. In the present context, the behavioral knowledge can be used to detect degradations of components and to analyse their trends to provide the local prognoses. Data acquisition and data processing techniques implemented for the local prognoses of the components or of their failure modes are numerous and often depend on the components or on the failure to prognose [3]. That is why we here consider that the suppliers provide the prognostic systems of their components for their different failure modes. Indeed, they know the behavioral models and they can so implement the most relevant techniques [31]. Therefore, a supplier can provide either one prognosis for each failure mode of the component or one prognosis for all its failure modes. In this last case, the component is assumed having only one failure mode [16].

The modeling proposed in [31] is based on object oriented BN and can be defined from MBSE diagrams. Nevertheless, the obtained graph modeling the multicomponent system must be checked and transformed. The first transformations lead to suppress graph cycles, because BNs are acyclic graphs. The second transformations deal with the fact that several paths may exist from a given vertex to another vertex. Those paths can be the consequence of a modeling based on MBSE diagrams such as activity diagrams. The existence of several paths from a vertex E1 to a vertex E2 introduces several times the occurrence probability of one state S_{E1} of E1 into the computation of the occurrence probabilities of the states of E2 whereas it is a unique occurrence that must so be considered once. The proposed transformations lead to establish several graphs to assess the future reliability of the entities of the system (components, functions, subsystems) whatever their hierarchical levels are. In the resulting modeling graphs, three kinds of vertices corresponding to patterns appear: components, simple functions and redundancy functions for which Bayesian inferences are proposed. These Bayesian inferences only handle aleatory uncertainty. In order to handle epistemic uncertainty too, the proposal consists in adapting, to this modeling, the implementation of the DST by the use of BN inferences for reliability analysis of complex systems proposed in [46,47] and in developing the inferences to take the additional states into account. The main objective is more to define the entities, whatever their level in the system breakdown structure (from components to subsystems), that will or will not be able to carry out the planned tasks than to identify the operating mode (degraded or not) at the end of these tasks. The handling of epistemic uncertainty of local prognoses leads to a generalization of the method proposed in [31].

4.1. Component pattern

Assuming components do not have self-healing ability: once they become failed they cannot recover from their failures without maintenance. According to CBM and PHM policies, maintenance of components is done before their failures, the case for which the consequence of a component failure could impact the physical integrity of other components, like a leak of a liquid on electrical devices or mechanical structure failure ejecting debris to other components, is therefore not considered. Nevertheless, a component becomes inoperative if another entity, on which it structurally depends, becomes inoperative or fails. That is why the distinction between the inability to operate because of an internal failure and because of another inoperative entity supports the decision making about the components that must undergo maintenance.

As shown in Fig. 4, the pattern of a component is made of a vertex to which one local prognostic at least is connected and that may structurally depends on one or several entities. Four distinct states are considered. They define the frame of discernment for a component $C = \{OK, F, OO, FOO\}$:

- *OK*: The component will be able to carry out the planned tasks even if its performances are not the best ones because of incipient degradations or of more important degradations.
- *F*: The component will not be able to operate within its minimum performances required to carry out the planned tasks because at least one internal failure has occurred or will occur. The component will have to undergo maintenance to operate within its minimum performances again.
- *OO*: The component will not able to operate within the minimum performances required to carry out the planned tasks because at least one entity it structurally depends on is inoperative or will become inoperative. The maintenance of the component is not necessary.
- *FOO*: The component will not be able to operate within its minimum performances required to carry out the planned tasks because at least one internal failure has occurred or will occur and because at least one entity on which it structurally depends on is inoperative or will become inoperative.

As shown in Fig. 4, there is no direct transition between the state OK and FOO meaning that a failure of the component occurs and an entity E_j becomes *KO* simultaneously. This transition is neglected because only the computed quantities, mainly the *bbas* of the four states, at the end of the planned task t_e are of interest whatever the order of transitions is.

A fifth state KO_r is considered. KO_r is the union of the states *F, OO* and *FOO* such as $KO_r = \{F, OO, FOO\}$. KO_r means that the component will not be able to operate within its minimum performances required to achieve the planned tasks whatever the causes are. This state is used to assess the impact of the inability of the component to carry out the planned tasks into the system by propagation in the modeling graphs. For this purpose, it is necessary to reduce the frame of discernment C to the frame of discernment $C_r = \{\{OK\}, KO_r\}$. The distribution of *bbas* on $\varepsilon_j^{C_r} \in 2^{C_r} = \{\varnothing, \{OK\}, KO_r, \{\{OK\}, KO_r\}\}$ are computed from the distribution of *bbas* on ε_i^C the elements of 2^C by the relationship (4) derived from the Bayesian approximation [52]. Knowing that the fused elements are here chosen *a priori* and not selected from the values of their *bbas*, this is not really an approximation.

$$bba(\varepsilon_j^{C_r}) = \begin{cases} bba(\varepsilon_i^C | \varepsilon_i^C = \varepsilon_j^{C_r}), & \varepsilon_j^{C_r} \cap KO_r = \varnothing \\ \sum_{\varepsilon_i^C \subseteq KO_r} bba(\varepsilon_i^C), & \varepsilon_j^{C_r} = KO_r \\ \sum_{\varepsilon_i^C \cap KO_r \neq \varnothing,\ \varepsilon_i^C - KO_r = \varepsilon_j^{C_r} - KO_r} bba(\varepsilon_i^C), & \varepsilon_j^{C_r} - KO_r \neq \varnothing \end{cases} \tag{4}$$

The distribution of *bbas* on the elements of 2^C is computed step by step by the means of inference grids and of the relation (3) by successively considering, on one hand, the local prognostics and, on the other hand, the entities the component depends on. The inference grids are defined from the transitions described in the state-machine diagram of Fig. 4.

The first step consists of a projection of the power set of the frame of discernment $2^{P_1} = \{\varnothing, \{F\}_1, \{\overline{F}\}_1, \{F, \overline{F}\}_1\}$ of the first local prognostic onto the power set of the frame of discernment 2^C of the component by setting $bba^{2^C}(\{OK\}) = bba^{2^{P_1}}(\{\overline{F}\}_1)$, $bba^{2^C}(\{F\}) = bba^{2^{P_1}}(\{F\}_1)$ and $bba^{2^C}(\{OK, F\}) = bba^{2^{P_1}}(\{F, \overline{F}\}_1)$; the other *bbas* of elements of 2^C are set to zero. If the component has more than one local prognostic, the second step consists in considering the impact of the other local prognostics one by one thanks to the inference grid of Table 3 and the relation (3). In Table 3, the index i denotes the ith considered local prognostic, the index $i-1$ is for the elements of 2^C whose values of *bbas* do not take into account the *bbas* of the ith local prognostic yet and the index i is also for the elements of 2^C whose values of *bbas* are modified once the inference is processed for the ith considered local prognostic. The *bbas* values of the elements of 2^C not listed in the Table 3 are not modified.

If the component has entities it depends on, the third step consists in considering the impact of those entities one by one thanks to the inference grid of Table 4 and the relation (3). For the jth entity on which the component depends, the power set of the frame of discernment is $2^{E_j} = \{\varnothing, \{OK\}_j, \{KO\}_j, \{OK, KO\}_j\}$. The state *KO* means the entity will not be able to operate within its minimum performances required to achieve the planned tasks whatever the causes are. In Table 4, the index $j-1$ is for the elements of 2^C whose values of *bbas* do not take into account the *bbas* of 2^{E_j} yet and the index j is also for the elements of 2^C whose values of *bbas* are modified once the inference is processed for the jth considered entity.

Table 3
Inference grid for considering more than one local prognostic.

2^C	2^{P_i}		
	$\{F\}_i$	$\{\overline{F}\}_i$	$\{F, \overline{F}\}_i$
$\{F\}_{i-1}$	$\{F\}_i$	$\{F\}_i$	$\{F\}_i$
$\{OK\}_{i-1}$	$\{F\}_i$	$\{OK\}_i$	$\{OK, F\}_i$
$\{OK, F\}_{i-1}$	$\{F\}_i$	$\{OK, F\}_i$	$\{OK, F\}_i$

Table 4
Inference grid for considering the entity the component depends on.

2^C	2^{E_j}		
	$\{OK\}_j$	$\{KO\}_j$	$\{OK, KO\}_j$
$\{OK\}_{j-1}$	$\{OK\}_j$	$\{OO\}_j$	$\{OK, OO\}_j$
$\{F\}_{j-1}$	$\{F\}_j$	$\{FOO\}_j$	$\{F, FOO\}_j$
$\{OO\}_{j-1}$	$\{OO\}_j$	$\{OO\}_j$	$\{OO\}_j$
$\{FOO\}_{j-1}$	$\{FOO\}_j$	$\{FOO\}_j$	$\{FOO\}_j$.
$\{OK, F\}_{j-1}$	$\{OK, F\}_j$	$\{OO, FOO\}_j$	$\{OK, F, OO, FOO\}_j$
$\{OK, OO\}_{j-1}$	$\{OK, OO\}_j$	$\{OO\}_j$	$\{OK, OO\}_j$
$\{OK, FOO\}_{j-1}$	$\{OK, FOO\}_j$	$\{OO, FOO\}_j$	$\{OK, OO, FOO\}_j$
$\{F, OO\}_{j-1}$	$\{F, OO\}_j$	$\{OO, FOO\}_j$	$\{OO, FOO\}_j$
$\{F, FOO\}_{j-1}$	$\{F, FOO\}_j$	$\{FOO\}_j$	$\{F, FOO\}_j$
$\{OO, FOO\}_{j-1}$	$\{OO, FOO\}_j$	$\{OO, FOO\}_j$	$\{OO, FOO\}_j$
$\{OK, F, OO\}_{j-1}$	$\{OK, F, OO\}_j$	$\{OO, FOO\}_j$	$\{OK, F, OO, FOO\}_j$
$\{OK, F, FOO\}_{j-1}$	$\{OK, F, FOO\}_j$	$\{OO, FOO\}_j$	$\{OK, F, OO, FOO\}_j$
$\{OK, OO, FOO\}_{j-1}$	$\{OK, OO, FOO\}_j$	$\{OO, FOO\}_j$	$\{OK, OO, FOO\}_j$
$\{F, OO, FOO\}_{j-1}$	$\{F, OO, FOO\}_j$	$\{OO, FOO\}_j$	$\{F, OO, FOO\}_j$
$\{OK, F, OO, FOO\}_{j-1}$	$\{OK, F, OO, FOO\}_j$	$\{OO, FOO\}_j$	$\{OK, F, OO, FOO\}_j$

According to the inferences presented in Tables 3 and 4, $bba^{2^C}(\{OK, FOO\}) = 0$ because it is not a result of any inference. This is consistent because the state *FOO* cannot be reached without passing through the state *F* or the state *OO*.

Once the *bbas* of the elements of 2^C are computed, the measures of belief and plausibility of each element of C are computed from (1) and (2). Then C is reduced to C_r by the using (4) for propagation purpose in the modeling graphs.

4.2. Redundancy pattern

Redundancies are entities that bring into operation the same service or function to match reliability or safety requirements [48]. In many cases, the service is carried out while one entity at least is able to provide it. These cases correspond to parallel structures in reliability diagrams. Particular systems also exist in which the service of redundant entities is down if the number of entities that bring it into operation goes under a number p over the n entities that are potentially able to carry it out [46,53]. Nevertheless, it is interesting to distinguish one more state than the one for which the service is operational and the one for which the service is down. This additive state is the one for which the service is operational with the minimum number of redundant entities. In such a situation, the system must not begin a new task mainly because of safety reasons [54]. Indeed, the loss of another entity will lead to the loss of the service. Thus maintenance is led before this "loss of redundancy" if the safety criterion is not satisfied.

As shown in Fig. 5, the redundancy pattern is made of a vertex to which n entities belong. The n entities carry out the same service that is operative if at least p entities are operative ($p < n$).

Three distinct states are considered among which one is dedicated to the "loss of redundancy". They define the frame of discernment for a redundancy $R^p = \{OK, LR, KO\}$.

- *OK*: Thanks to $p+1$ entities, at least, the service will be operative within the minimum required performances to carry out the planned tasks.
- *LR*: Only p entities will be operative within the minimum required performances to carry out the planned tasks. Maintenance can be required for safety reasons.
- *KO*: Less than p entities will be able to operate. This is not sufficient to ensure the minimum performances required to carry out the planned tasks. Maintenance is required to restore the service.

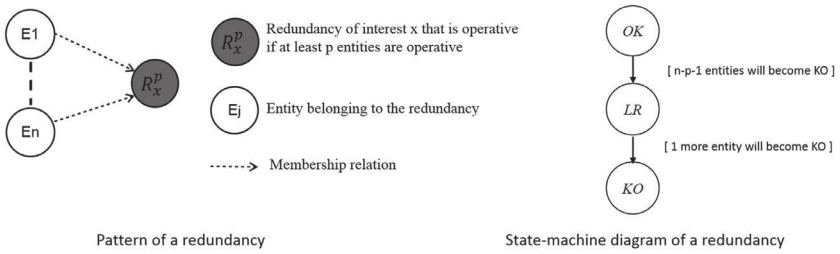

Fig. 5. Pattern and state-machine diagram of a redundancy.

LR can be seen as a degraded *OK* state. A state OK_r is so considered. OK_r is the union of the states *OK*, and *LR* such as $OK_r = \{OK, LR\}$. This state is used to propagate, in the modeling graphs, the redundant structure ability to operate within the minimum required performances to carry out the planned tasks. For this purpose, it is necessary to reduce the frame of discernment R^p to the frame of discernment $R_r^p = \{OK_r, \{KO\}\}$. The distribution of *bbas* on the elements $\varepsilon_j^{R_r^p} \in 2^{R_r^p} = \{\varnothing, OK_r, \{KO\}, \{OK_r, \{KO\}\}\}$ is computed from the distribution of *bbas* on $\varepsilon_i^{R^p}$ the elements of 2^{R^p} by the relationship (5) derived from the Bayesian approximation like (4) for components [2].

$$bba(\varepsilon_j^{R_r^p}) = \begin{cases} bba(\varepsilon_i^{R^p} | \varepsilon_i^{R^p} = \varepsilon_j^{R_r^p}), \quad \varepsilon_j^{R_r^p} \cap OK_r = \varnothing \\ \sum_{\varepsilon_i^{R^p} \subseteq OK_r} bba(\varepsilon_i^{R^p}), \quad \varepsilon_j^{R_r^p} = OK_r \\ \sum_{\varepsilon_i^{R^p} \cap OK_r \neq \varnothing,\ \varepsilon_i^{R^p} - OK_r = \varepsilon_j^{R_r^p} - OK_r} bba(\varepsilon_i^{R^p}), \quad \varepsilon_j^{R_r^p} - OK_r \neq \varnothing \end{cases} \tag{5}$$

The distribution of *bbas* on the elements of 2^{R^p} is computed step by step by the means of inference grids and the relation (3) by successively considering the entities that belongs to the redundancy. The inference grids are defined from the transitions described in the state-machine diagram of Fig. 5.

For 1/n redundancies, the first step consists of a projection of the power set of the reduced frame of discernment $2^{E_1} = \{\varnothing, \{OK\}_1, \{KO\}_1, \{OK, KO\}_1\}$ of the first entity onto the power set of the frame of discernment 2^{R^1} of the redundancy by setting $bba^{2^{R^1}}(\{OK\}) = bba^{2^{E_1}}(\{OK\}_1)$, $bba^{2^{R^1}}(\{KO\}) = bba^{2^{E_1}}(\{KO\}_1)$ and $bba^{2^{R^1}}(\{OK, KO\}) = bba^{2^{E_1}}(\{OK, KO\}_1)$; the *bbas* of the other elements of 2^{R^p} are set to zero. The second step consists in considering the impact of the states of the other entities one by one thanks to the inference grids of Tables 5 and 6 and the relation (3). In Tables 5 and 6, the index k denotes the kth considered entity, the index $k-1$ is for the elements of 2^{R^1} whose values of *bbas* do not take into account the *bbas* of the kth considered entity yet and the index k is also for the elements of 2^{R^1} whose values of *bbas* are modified once the inference is processed for the kth considered entity. The inference of Table 5 is used for the second entity of the redundancy. Then, the inference of Table 6 is used for all the other entities of the redundancy. The values of the *bbas* of the elements of 2^{R^1} not listed in the Table 5 are not modified.

For redundancies that need more than one element to be operative ($p > 1$), a table is built that gives the conditional *bbas* of the elements of the power set of the frame of discernment 2^{R^p} is defined according to the state-machine diagram of Fig. 5 and to the example proposed in [46] for a 2/3 redundancy. Table 7 is an excerpt from the complete table defined for a 2/4 redundancy.

Once the *bbas* of the elements of 2^{R^p} are computed, the measures of belief and plausibility of each element of R^p are computed from (1) and (2). Then R^p is reduced to R_r^p by the using (5) for propagation purpose in the modeling graphs.

In the case of passive redundancies, the proposed inferences are

Table 5
Inference grid for considering the second entity of a redundancy if $p = 1$.

2^{R^1}	2^{E_2}		
	$\{OK\}_2$	$\{KO\}_2$	$\{OK, KO\}_2$
$\{OK\}_1$	$\{OK\}_2$	$\{LR\}_2$	$\{OK, LR\}_2$
$\{KO\}_1$	$\{LR\}_2$	$\{KO\}_2$	$\{LR, KO\}_2$
$\{OK, KO\}_1$	$\{OK, LR\}_2$	$\{LR, KO\}_2$	$\{OK, LR, KO\}_2$

Table 6
Inference grid for considering the entities of a redundancy from the 3rd one to nth one if $p = 1$.

2^{R^1}	2^{E_k}		
	$\{OK\}_k$	$\{KO\}_k$	$\{OK, KO\}_k$
$\{OK\}_{k-1}$	$\{OK\}_k$	$\{OK\}_k$	$\{OK\}_k$
$\{LR\}_{k-1}$	$\{OK\}_k$	$\{LR\}_k$	$\{OK, LR\}_k$
$\{KO_{k-1}\}$	$\{LR\}_k$	$\{KO\}_k$	$\{LR, KO\}_k$
$\{OK, LR\}_{k-1}$	$\{OK\}_k$	$\{OK, LR\}_k$	$\{OK, LR\}_k$
$\{OK, KO\}_{k-1}$	$\{OK, LR\}_k$	$\{OK, KO\}_k$	$\{OK, LR, KO\}_k$
$\{LR, KO\}_{k-1}$	$\{OK, LR\}_k$	$\{LR, KO\}_k$	$\{OK, LR, KO\}_k$
$\{OK, LR, KO\}_{k-1}$	$\{OK, LR\}_k$	$\{OK, LR, KO\}_k$	$\{OK, LR, KO\}_k\{OK, KO\}_{new}$

Table 7
Excerpt of the table used to compute the conditional *bbas* for a 2/4 redundancy.

2^{E_1}	2^{E_2}	2^{E_3}	2^{E_4}	2^{R^2}
$\{OK\}$	$\{OK\}$	$\{OK\}$	$\{OK\}$	$\{OK\}$
			$\{OK\}$	$\{OK\}$
			$\{OK, KO\}$	$\{OK\}$
		$\{KO\}$	$\{OK\}$	$\{OK\}$
			$\{KO\}$	$\{LR\}$
			$\{OK, KO\}$	$\{OK, LR\}$
		$\{OK, KO\}$	$\{OK\}$	$\{OK\}$
			$\{KO\}$	$\{OK, LR\}$
			$\{OK, KO\}$	$\{OK, LR\}$
	$\{KO\}$	$\{OK\}$	$\{OK\}$	$\{OK\}$
			$\{KO\}$	$\{LR\}$
			$\{OK, KO\}$	$\{OK, LR\}$
		$\{KO\}$	$\{OK\}$	$\{LR\}$
			$\{KO\}$	$\{KO\}$
			$\{OK, KO\}$	$\{LR, KO\}$
		$\{OK, KO\}$	$\{OK\}$	$\{OK, LR\}$
			$\{KO\}$	$\{LR, KO\}$
			$\{OK, KO\}$	$\{OK, LR, KO\}$
	$\{OK, KO\}$	$\{OK\}$	$\{OK\}$	$\{OK\}$
			$\{KO\}$	$\{OK, LR\}$
			$\{OK, KO\}$	$\{OK, LR\}$
		$\{KO\}$	$\{OK\}$	$\{OK, LR\}$
			$\{KO\}$	$\{LR, KO\}$
			$\{OK, KO\}$	$\{OK, LR, KO\}$
		$\{OK, KO\}$	$\{OK\}$	$\{OK, LR\}$
			$\{KO\}$	$\{OK, LR, KO\}$
			$\{OK, KO\}$	$\{OK, LR, KO\}$
$\{KO\}$	$\{OK\}$	$\{OK\}$	$\{OK\}$	$\{OK\}$
⋮	⋮	⋮	⋮	⋮

pessimistic. Indeed, they consider that all the entities ensuring the service will operate together during the planned tasks whereas only one (or the minimum necessary group) will be solicited with the optimistic hypothesis. However, entities ensuring passive redundancies are mainly solicited when all the other entities ensuring the service are failed. In this situation the redundancy is in *LR* state. Such a situation is often critical in terms of safety and requires urgent maintenance that leads to stop the productive task as soon as possible. This is the case when the ram air turbine must be used in an aircraft, it provides the sufficient energy for control surfaces and some instruments to land urgently [48]. Of course, the programed flight is uncompleted. That is why the values of *Bel*(*LR*) and *Pl*(*LR*) for a redundancy are, at least; as important as the values of *Bel*(*KO*) and *Pl*(*KO*) for making decision about production or maintenance.

4.3. Function pattern

Functions can be identified from the hierarchical view. They are implemented by several entities, which can be sub-functions, components or services brought into operation by redundant entities; but it can also be implemented by a unique entity. A function will fail at achieving the planned tasks as soon as one of the entities implementing it will become inoperative. This is modeled by the means of a serial structure in reliability diagram. Therefore, the function pattern is made of a vertex to which *n* entities contribute to its implementation as shown in Fig. 6.

Two distinct states are considered for a function. They define the frame of discernment for a function $F^{ct} = \{OK, KO\}$.

- *OK*: The function will be able to carry out the planned tasks within the minimum required performances.
- *KO*: The function will not be able to carry out the planned tasks within the minimum required performances because one of its entities, at least, is *KO* or will become *KO* during the achievement of the tasks.

The distribution of *bbas* on the elements of $2^{F^{ct}}$ is computed step by step by the means of an inference grid and the relation (3) by successively considering the entities that belongs to the redundancy. The inference grid is defined from the transition described in the state-machine diagram of Fig. 6.

The first step consists of a projection of the power set of the reduced frame of discernment $2^{E_1} = \{\emptyset, \{OK\}_1, \{KO\}_1, \{OK, KO\}_1\}$ of the first entity onto the power set of the frame of discernment $2^{F^{ct}}$ of the function by setting $bba^{2^{F^{ct}}}(\{OK\}) = bba^{2^{E_1}}(\{OK\}_1)$, $bba^{2^{F^{ct}}}(\{KO\}) = bba^{2^{E_1}}(\{KO\}_1)$ and $bba^{2^{F^{ct}}}(\{OK, KO\}) = bba^{2^{E_1}}(\{OK, KO\}_1)$. If more than one entity contributes to the function, the second step consists in considering the impact of the states of the other entities one by one thanks to the inference grid of Table 8 and the relation (3). The index *i* denotes the *i*th considered entity, the index $i - 1$ is for the elements of $2^{F^{ct}}$ whose values of *bbas* do not take into account the *bbas* of the *i*th considered entity yet

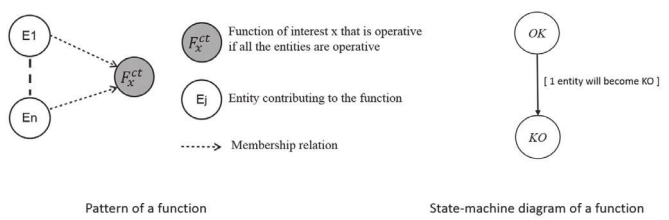

Fig. 6. Pattern and state-machine diagram of a function.

Table 8
Inference grid for considering more than one entity in a function.

$2^{F^{ct}}$	2^{E_i}		
	$\{OK\}_i$	$\{KO\}_i$	$\{OK, KO\}_i$
$\{OK\}_{i-1}$	$\{OK\}_i$	$\{KO\}_i$	$\{OK, KO\}_i$
$\{KO\}_{i-1}$	$\{KO\}_i$	$\{KO\}_i$	$\{KO\}_i$
$\{OK, KO\}_{i-1}$	$\{OK, KO\}_i$	$\{KO\}_i$	$\{OK, KO\}_i$

and the index *i* is also for the elements of $2^{F^{ct}}$ whose values of *bbas* are modified once the inference is processed for the *i*th considered entity.

Once the *bbas* of the elements of $2^{F^{ct}}$ are computed, the measures of belief and plausibility of each element of F^{ct} are computed from (1) and (2).

4.4. Computation of the decision support indicators

Once the system is modelled, the obtained graph has to be transformed to suppress graph cycles and then this transformed graph is processed in order to avoid that the *bbas* of a power set of a unique frame of discernment could be considered several times according to the method described in [31]. This processing may lead to a system modeling made of several graphs for different hierarchical levels of entities. The computation of the decision support indicators can begin when all the local prognoses are obtained for t_e, the date at which the planned productive tasks will end.

However, the *bbas, Bels* and *Pls* are measures at the credal level. Even if they are relevant to propagate local prognoses epistemic uncertainties in the system ability analysis to carry out production tasks, they can be difficult to handle for decision-makers. The pignistic transformation defines a measure that can be considered as a probability distribution [44]. For each vertex, the pignistic probabilities (*BetP*) of the elements of its frame of discernment and of its reduced frame of discernment are computed according to (6).

$$BetP(\omega_i) = \sum_{\varepsilon \in 2^{\Omega}} bba(\varepsilon) \frac{|\omega_i \cap \varepsilon|}{|\varepsilon|} \tag{6}$$

Considering the computed values of *BetP* for relevant vertices for t_e (those vertices may correspond to solicited system essential entities, mainly functions or sub-systems, for a given sequence of tasks), the decision-makers can valid the sequence of planned productive tasks, reduce the number of tasks, replace or suppress tasks that will solicit too weak functions and, so, plan the needed maintenance operations. To identify the needed maintenance operations and to plan them in terms of time and resources, the identification of components that should undergo maintenance must be done. Thus two more fields are computed for each vertex. The first one is the identifier of the component whose maintenance will best improve the ability of the vertex to achieve the planned tasks. If the vertex is a component, it can be its own identifier. The second field contains a value computed from the *bbas* of the power sets of the frames of discernment of entities belonging to the vertex or which the vertex structurally depends on. This field avoids back traversals in graphs. The proposed computation of these two fields is derived from the one presented in [31]. The probability of failure is replaced by the pignistic probability of failure. Thus the computation of these fields, respectively id^{Ex} and $BetP_{max}^{Ex}(F)$ for an entity *Ex*, becomes, with *Ei* and *Ek* other vertices, $BetP^{Ex}(\omega_i)$ the pignistic probability of the state ω_i of an entity *Ex*, $\Gamma^{-1}(Ex)$ the set of predecessors of *Ex* and *R* the set of vertices that are redundancies in the processed modeling graph:

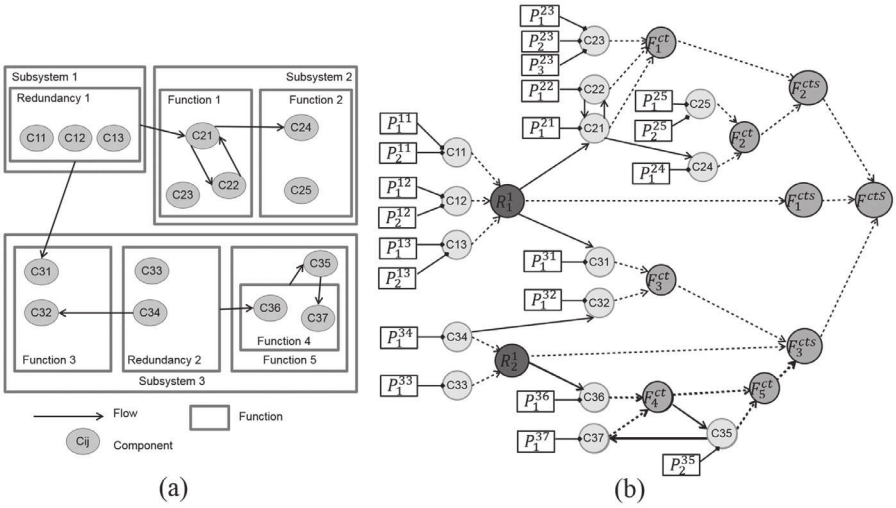

Fig. 7. Fictitious system from a systems engineering point of view and its modeling graph.

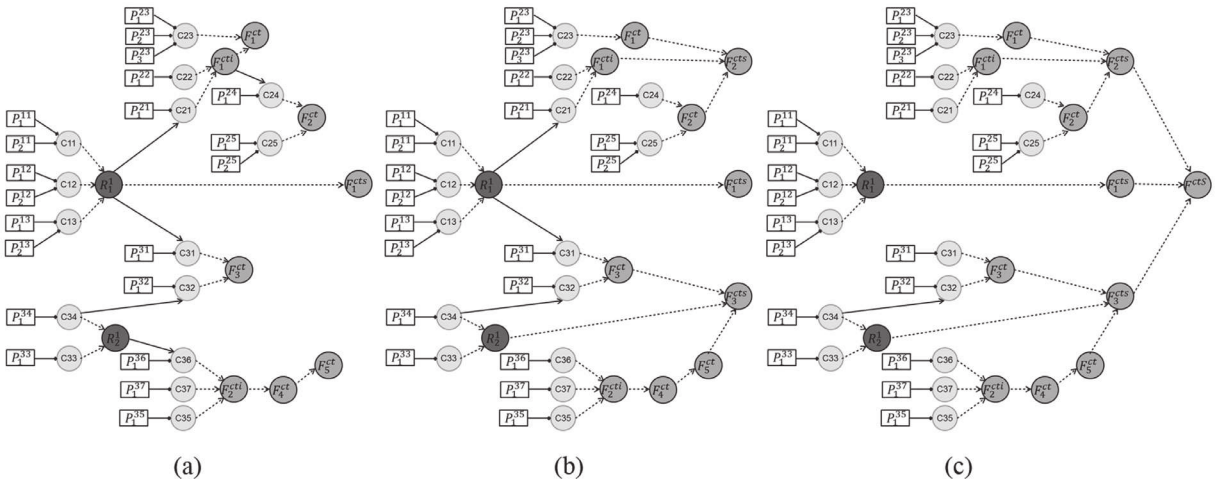

Fig. 8. Graphs used to compute the decision support indicators of the fictitious multicomponent system.

- for a vertex *Ex* that is a component, the computation of $BetP^{Ek}_{max}(F)$ and id^{Ek} is:
  If $BetP^{Ek}_{max}(F) > BetP^{Ex}(F)$ where Ek is such as

$$\begin{aligned} & BetP^{Ek}_{max}(F) = \max_{Ei \in \Gamma^{-1}(Ex)} \left\{ \max_{Ei \notin R}(BetP^{Ei}_{max}(F)), \max_{Ei \in R}(BetP^{Ei}(KO)) \right\} Then \\ & \qquad id^{Ex} \leftarrow id^{Ek} \\ & \qquad BetP^{Ex}_{max}(F) \leftarrow BetP^{Ek}_{max}(F) \\ & Else \\ & \qquad id^{Ex} \leftarrow Ex \\ & \qquad BetP^{Ex}_{max}(F) \leftarrow BetP^{Ex}(F) \\ & End\ if \end{aligned} \tag{7}$$

- for a vertex *Ex* that is a redundancy or a function, the computation of $BetP^{Ek}_{max}(F)$ and id^{Ek} is:
  $id^{Ex} \leftarrow id^{Ek}$

$$BetP^{Ex}_{max}(F) \leftarrow BetP^{Ek}_{max}(F) \tag{8}$$

- where Ek is such as $BetP^{Ek}_{max}(F) = \max_{Ei \in \Gamma^{-1}(Ex)}\{\max_{Ei \notin R}(BetP^{Ei}_{max}(F)), \max_{Ei \in R}(BetP^{Ei}(KO))\}$

This first approach is justified by the fact that, if the pignistic probabilities of failure were computed for all the local prognoses, the computations based on object-oriented BN proposed in [31] could be exploited but with the loss of the information about epistemic uncertainties. Other criteria can be used to define components to maintain such as maintenance costs [27]. If failures might lead to casualties or to serious damage to the environment, the plausibility measures of *KO* and *F* states could be more relevant indicators to define the ability of the main functions to complete the planned tasks as well as to identify the needed maintenance. Thus the process to identify the components to maintain must be adapted to the company's policy declined in terms of reliability, safety, costs, productivity…

5. Experimental results

The proposed method to assess the ability of a multicomponent system to achieve the planned productive tasks has been implement by the means of the discrete event systems simulation Arena software in which the patterns have been defined as blocks. To validate the patterns and the associated computations, the models of a bridge system, of a small system made of 3 components associated in a 2/3 redundancy and of the Kamat–Riley system proposed in [46] have been implemented. For those implementations, the components have had only one local prognosis whose *bbas* have been initialized with the *bbas* values of the corresponding components of these models, the function patterns correspond to AND gates and the 1/n redundancy patterns to OR gates. The results obtained for the reduced frames of discernment by the proposed

Table 9
Results of the simulated scenarios.

Ex	Scenario 1			Scenario 2			Scenario 3			Scenario 4		
	$BetP^{Ex}(LR)$	$BetP^{Ex}(KO)$	id^{Ex}	$BetP^{Ex}(LR)$	$BetP^{Ex}(KO)$	id^{Ex}	$BetP^{Ex}(LR)$	$BetP^{Ex}(KO)$	id^{Ex}	$BetP^{Ex}(LR)$	$BetP^{Ex}(KO)$	id^{Ex}
F^{ctS}		6.28E-03	C23		1.18E-02	C21		6.48E-03	C21		8.82E-03	C34
F_3^{cts}		2.70E-03	C32		5.49E-03	C34		3.00E-03	C34		5.49E-03	C34
F_2^{cts}		3.59E-03	C23		6.38E-03	C21		3.50E-03	C21		3.35E-03	C25
F_1^{cts}		7.55E-10	C13		3.60E-09	C11		7.06E-10	C11		3.60E-09	C11
F_5^{ct}		1.35E-03	C36		1.55E-03	C37		9.50E-04	C37		1.55E-03	C37
F_4^{ct}		1.35E-03	C36		1.55E-03	C37		9.50E-04	C37		1.55E-03	C37
F_3^{ct}		1.35E-03	C32		3.95E-03	C34		2.05E-03	C34		3.95E-03	C34
F_2^{ct}		2.25E-03	C21		5.04E-03	C21		2.75E-03	C21		2.00E-03	C25
F_1^{ct}		2.25E-03	C23		4.84E-03	C21		2.55E-03	C21		1.80E-03	C23
F_2^{cti}		1.35E-03	C36		1.55E-03	C37		9.50E-04	C37		1.55E-03	C37
F_1^{cti}		9.00E-04	C21		3.50E-03	C21		1.80E-03	C21		4.50E-04	C22
R_2^1	9.00E-04	2.03E-07	C33	3.50E-03	1.37E-06	C34	1.80E-03	3.89E-07	C34	3.50E-03	1.37E-06	C34
R_1^1	2.46E-06	7.38E-10	C13	8.04E-06	3.51E-09	C11	2.58E-06	6.57E-10	C11	8.04E-06	3.51E-09	C11
Ex	$BetP^{Ex}(F)$	$BetP^{Ex}(KO)$	id^{Ex}	$BetP^{Ex}(F)$	$BetP^{Ex}(KO)$	id^{Ex}	$BetP^{Ex}(F)$	$BetP^{Ex}(KO)$	id^{Ex}	$BetP^{Ex}(F)$	$BetP^{Ex}(KO)$	id^{Ex}
C37	4.50E-04	4.50E-04	C37	6.50E-04	6.50E-04	C37	4.50E-04	4.50E-04	C37	6.50E-04	6.50E-04	C37
C36	4.50E-04	4.50E-04	C36	4.50E-04	4.51E-04	C36	2.50E-04	2.50E-04	C36	4.50E-04	4.51E-04	C36
C35	4.50E-04	4.50E-04	C35	4.50E-04	4.50E-04	C35	2.50E-04	2.50E-04	C35	4.50E-04	4.50E-04	C35
C34	4.50E-04	4.50E-04	C34	3.05E-03	3.05E-03	C34	1.55E-03	1.55E-03	C34	3.05E-03	3.05E-03	C34
C33	4.50E-04	4.50E-04	C33	4.50E-04	4.50E-04	C33	2.50E-04	2.50E-04	C33	4.50E-04	4.50E-04	C33
C32	4.50E-04	9.00E-04	C32	4.49E-04	3.50E-03	C34	2.50E-04	1.80E-03	C34	4.49E-04	3.50E-03	C34
C31	4.50E-04	4.50E-04	C31	4.50E-04	4.50E-04	C31	2.50E-04	2.50E-04	C31	4.50E-04	4.50E-04	C31
C25	9.00E-04	9.00E-04	C25	1.10E-03	1.10E-03	C25	7.00E-04	7.00E-04	C25	1.10E-03	1.10E-03	C25
C24	4.50E-04	1.35E-03	C21	4.48E-04	3.95E-03	C21	2.50E-04	2.05E-03	C21	4.50E-04	9.00E-04	C22
C23	1.35E-03	1.35E-03	C23	1.35E-03	1.35E-03	C23	7.50E-04	7.50E-04	C23	1.35E-03	1.35E-03	C23
C22	4.50E-04	4.50E-04	C22	4.50E-04	4.50E-04	C22	2.50E-04	2.50E-04	C22	4.50E-04	4.50E-04	C22
C21	4.50E-04	4.50E-04	C21	3.05E-03	3.05E-03	C21	1.55E-03	1.55E-03	C21	1.00E-07	1.04E-07	C21
C13	9.00E-04	9.00E-04	C13	9.00E-04	9.00E-04	C13	5.00E-04	5.00E-04	C13	9.00E-04	9.00E-04	C13
C12	9.00E-04	9.00E-04	C12	1.10E-03	1.10E-03	C12	7.00E-04	7.00E-04	C12	1.10E-03	1.10E-03	C12
C11	9.00E-04	9.00E-04	C11	3.50E-03	3.50E-03	C11	1.80E-03	1.80E-03	C11	3.50E-03	3.50E-03	C11

Table 10
Computed and usable quantities to support decision for redundancy R_2^1 in scenario 1.

$2^{R_2^1}$	$bba^{2^{R_2^1}}(.)$	$Bel^{2^{R_2^1}}(.)$	$BetP^{R_2^1}(.)$	$Pl^{2^{R_2^1}}(.)$	$2^{R_{2r}^1}$	$Bel^{2^{R_{2r}^1}}(.)$	$BetP^{R_{2r}^1}(.)$	$Pl^{2^{R_{2r}^1}}(.)$
$\{OK\}$	9.990E-01	9.990E-01	9.991E-01	9.992E-01	$\{OK_r\}$	9.999E-01	9.999E-01	9.999E-01
$\{LR\}$	7.996E-04	7.996E-04	8.996E-04	9.996E-04				
$\{OK, LR\}$	1.999E-04	9.999E-01		9.999E-01				
$\{KO\}$	1.600E-07	1.600E-07	2.033E-07	2.500E-07	$\{KO\}$	1.600E-07	2.050E-07	2.500E-07
$\{LR, KO\}$	8.000E-08	7.998E-04		9.997E-04				
$\{OK, LR, KO\}$	1.000E-08	1.000E + 00		1.000E + 00	$\{OK_r, \{KO\}\}$	1.000E + 00		1.000E + 00

assessment method have been the same as the ones presented in [46]. The implementation of the system proposed in [31] by its three modeling graphs has also been done to validate the identification of components to maintain. For this validation, all the local prognoses have been initialized with dogmatic distributions of *bbas* corresponding to the scenarios proposed in [31] for the different scenarios. Therefore, there has been no epistemic uncertainty and so, for all the vertices whose frames of discernment were Ω with $\varepsilon_i \in 2^{\Omega}$, $bba(\varepsilon_i||\varepsilon_i| \neq 1) = 0$. The *bbas*, obtained for the models and the scenarios have been the same as the probabilities of the corresponding states as well as the suggested components to maintain.

The fictitious multicomponent system is also the one proposed in [31]. This system is presented on Fig. 7. Fig. 7(a) shows the system from a systems engineering point of view and Fig. 7(b) shows the modeling graph directly obtained from Fig. 7(a). On Fig. 7(b), the local prognoses of components are shown. This modeling graph is not acyclic and several paths exist between some vertices and requires transformations for the reasons presented in Section 4.4.

Once the transformations described in [31] are done, the three modeling graphs shown on Fig. 8 are obtained and used for the computation of the decision support indicators. In these graphs, the F_n^{cti} stand for functions that are introduced to solve the graph cycles, the F_p^{cts} stands for functions that are considered as subsystems from a systems engineering point of view and F^{ctS} stands for the whole fictitious system.

The graph of Fig. 8(a) is used to compute the decision support indicators for all the entities of the graph. The graph of Fig. 8(b) is then used to compute the decision support indicators of subsystems F_2^{cts} and F_3^{cts}. Eventually, the graph of Fig. 8(c) is used to compute the decision support indicators of the whole system. Four scenarios have been computed from the graphs of Fig. 8. Their results are presented in Table 9 where the pignistic probabilities of the frames of discernment are given as well as the identifiers of the suggested components to maintain for each entity. Indeed, we here assume that the decision making process is based, for each entity, on the pignistic probabilities (*BetP*) of the elements of its frame of discernment that are easier to handle by decision-makers than credal level measures.

The scenario 1 consists of one task lasting $(t_e - t_0)$ 4.000 time units at the end of which all the local prognoses are the same. According to the notations of Section 3, the local prognoses are supposed pre-processed and are simulated from the following relationships:

$$bba_{\{F\}}(t) = e^{k_{\{F\}}(t-t_0)} \tag{9}$$

$$bba_{\{F,\overline{F}\}}(t) = e^{k_{\{F,\overline{F}\}}(t-t_0)} \tag{10}$$

$$bba_{\{\overline{F}\}}(t) = 1 - bba_{\{F\}}(t) - bba_{\{F,\overline{F}\}}(t) \tag{11}$$

with $t_0 = 0$. After the simulations the local prognoses are, according to the notations used to assess the future reliability of the entities of the system: $bba^{2^P}(\{F\}) = 4.0E-4$, $bba^{2^P}(\{\overline{F}\}) = 0.9995$ and $bba^{2^P}(\{F,\overline{F}\}) = 1.0E-4$. The results presented in Table 9 shows that the pignistic probability that at least one the subsystems of the system will become inoperative before the end of the task is $BetP^{F^{ctS}}(KO) = 6.28E-3$. If this value is too high, the task must not be planned and the component that should first undergo maintenance is C23 according to the computation based on (7) and (8). However, the proposed method provides various indicators for each entity such as the ones presented in Table 10 for redundancy R_2^1 with this first scenario. Thus, a decision-maker can consider the most appropriate indicators for the entities of interest according to the productive tasks to do. Indeed some productive tasks may not solicit given functions while other functions are essential for their achievement. In this case, F_S^{ct} could be adapted by gathering only the functions (or subsystems) the productive tasks will solicit.

The scenario 2 is based on scenario 1 for the same 4.000 time unit task at the end of which all the local prognoses are the same excepting the local prognoses P_1^{11}, P_1^{21}, P_1^{34}, P_2^{12}, P_2^{25} and P_1^{37}, for which the values of $k_{\{F\}}$ and $k_{\{F,\overline{F}\}}$ have been modified in such a way that the *bbas* of P_1^{11}, P_1^{21} and P_1^{34} become $bba^{2^P}(\{F\}) = 3.0E-3$, $bba^{2^P}(\{\overline{F}\}) = 0.9969$ and $bba^{2^P}(\{F,\overline{F}\}) = 1.0E-4$, and the *bbas* of P_2^{12}, P_2^{25} and P_1^{37} become $bba^{2^P}(\{F\}) = 4.0E-4$, $bba^{2^P}(\{\overline{F}\}) = 0.9991$ and $bba^{2^P}(\{F,\overline{F}\}) = 5.0E-4$. Assuming the task will solicit the whole system and that the decision maker states the maximum value of $BetP^{F^{ctS}}(KO)$ to valid a task is $1.0E-2$, the system will not be able be to fulfill the 4.000 time unit task with a sufficient dependability. Indeed, for this scenario $BetP^{F^{ctS}}(KO)$ is about $1.18E-2$ as shown in Table 9. In this case, two decisions can be made: either maintenance of, at least, component C21 is undergone before the 4.000 time unit task is undertaken or a task that will less solicit the system is planned like a shorter task. Let us note that, if the 4.000 time unit task will only solicit the subsystems F_1^{cts} and F_2^{cts} or the subsystems F_1^{cts} and F_3^{cts}, the prior maintenance of C21 will not be needed. This may correspond to a degraded but acceptable functioning of the system.

The scenario 3 is based on the same local prognoses as the ones of the scenario 2; but the productive task will only last 2.000 time units. The local prognoses are processed for this new task. The results presented in Table 9 show that the $BetP^{F^{ctS}}(KO)$ remains below the threshold of $1.0E-2$. Thus, the 2.000 time unit productive task can be undertaken before maintenance of, at least, the component C21 is undergone. This can give time for maintenance logistics and so to reduce the downtime duration.

The scenario 4 is also based on the same local prognoses as the ones of the scenario 2; but assuming the component C21 will be maintained before the 4.000 time unit productive task. To simulate this, the values $k_{\{F\}}$ and $k_{\{F,\overline{F}\}}$ of its local prognosis P_1^{21} have considerably been reduced because all the components are supposed to have the same duration of use in the proposed scenarios. To take the maintenance of a component into account its duration of use can be set to zero before the planning of new productive tasks. According to the results shown in Table 9, the 4.000 time unit task can be undertaken. Indeed, $BetP^{F^{ctS}}(KO)$ remains below the threshold of $1.0E-2$. However, its value is quite close to this threshold, about $8.82E-3$. This may lead to another downtime for maintenance of the component C34 after the achievement of this productive task. To avoid that a maintenance task almost always follows a productive task, the maintenance of all the components that lead to restore a much higher level of reliability than the acceptable one for the entities of interest should be undergone when a downtime is scheduled. Applying this policy would also lead to maintain, at least, the component C34.

6. Conclusion

An assessment method of the future ability of multicomponent systems to carry out a future sequence of productive tasks based on local prognoses was proposed in this paper. The method provides decision supports for production planning by assessing the risk of failure while a tasks sequence is carried out leading to stop the tasks for corrective maintenance. It also provides decision supports for maintenance by enabling in advance the identification of components that should undergo maintenance in order to prepare the maintenance logistics while achieving productive tasks. Thus the method is compliant to CBM and PHM policies. Since the method is based on local prognoses, it handles their uncertainties. That is why, it is based on the DST. To be handled, local prognoses were categorized and the transformations of the data they provide to be compliant to DST were given. Then the method consists of the implementation of the DST by the use of BN inferences. Patterns encountered in systems engineering were identified and inferences were given for each of them where the reductions of frames of discernment avoid the combinatory explosions of number of states to consider. The proposed identification of components is based on their pignistic probabilities of internal failures but it could be based on other criteria like their plausibility measures of internal failures or their maintenance costs. The method has been implemented and tested thanks to Arena software. A fictitious system has been simulated for different situations aiming at presenting how the decision supports can be used for production and maintenance purposes aiming at a better compromise between the satisfactions of the respective objectives of the CBM and of the production planning. Although the method provides lots of decisions supports, the decision-makers can only consider the entities of interests, mainly functions, solicited by the production tasks to be planned. For these entities, the decision-makers have indicators such as the belief, the plausibility and pignistic probability of a state. They can thus choose the most relevant one according to the application or the enterprise policy. The method also provide to the decision-makers the identifiers of the components to maintain to improve the ability of the system or of its entities of interest to carry out the planned tasks.

Further developments deal with the definition of a less pessimistic pattern for passive redundancies. They can also deal with joint production and maintenance planning techniques based on technical resources implementing this assessment. Developments can also be made for the reliability analyses of systems since their design stages from prior knowledge or experts opinions as it is the case for FMECA [28]. The consideration of consistency based diagnosis [55] can be developed too by introducing fault detections and their uncertainties in the model of the system and to propagate them in order to confirm or not candidates according to the propagation of failures.

Supplementary materials

Supplementary material associated with this article can be found, in the online version, at doi:10.1016/j.ress.2018.08.005.

References

[1] Jardine AKS, Lin D, Banjevic D. A review on machinery diagnostics and prognostics implementing condition-based maintenance. Mech Syst Sig Process 2006;20:1483–510.

[2] Julka N, Thirunavukkarasu A, Lendermann P, Gan BP, Schirrmann A, Fromm H, Wong E. Making use of prognostics health management information for aerospace spare components logistics network optimization. Comput Ind 2011;62:613–22.

[3] Scarf P. A Framework for condition monitoring and condition based maintenance. Qual Technol Quant Manage 2007;4:301–12.

[4] Medjaher K, Tobon-Mejia DA, Zerhouni N. Remaining useful life estimation of critical components with application to bearings. IEEE Trans Reliab 2012;61:292–302.

[5] Vachtsevanos G, Lewis FL, Roemer M, Hess A, Wu B. Intelligent fault diagnosis and prognosis for engineering system. Hoboken: John Wiley & Sons Inc.; 2006.

[6] Gouriveau R, Zerhouni N. Connexionist-systems-based long term prediction approaches for prognostics. IEEE Trans Reliab 2012;61:909–20.

[7] He W, Williard N, Osterman M, Pecht M. Prognostics of lithium-ion batteries based on Dempster–Shafer theory and the Bayesian Monte Carlo method. J Power Sources 2011;196:10314–21.
[8] Jin G, Matthews DE, Zhou Z. A Bayesian framework for on-line degradation assessment and residual life prediction of secondary batteries in spacecraft. Reliab Eng Syst Saf 2013;113:7–20.
[9] Le Son K, Fouladirad M, Barros A, Levrat E, Iung B. Remaining useful life estimation based on stochastic deterioration models: a comparative study. Reliab Eng Syst Saf 2013;112:165–75.
[10] Zhao F, Tian Z, Zeng Y. Uncertainty quantification in gear remaining useful life prediction through an integrated prognostics method. IEEE Trans Reliab 2013;62:146–59.
[11] Byington C, Watson M, Roemer M, Galie T. Prognostic enhancements to gas turbine diagnostic systems. Proceedings of the IEEE aerospace conference. USA: Big Sky; 2001.
[12] Tobon-Mejia DA, Medjaher K, Zerhouni N, Tripot G. A data-driven failure prognostics method based on mixture of Gaussians hidden Markov models. IEEE Trans Reliab 2012;61:491–503.
[13] Yam RCM, Tse PW, Li L, Tu P. Intelligent predictive decision support system for condition-based maintenance. Int J Adv Manuf Technol 2001;17:383–91.
[14] Ferreiro S, Arnaiz A, Sierra B, Irigoien I. Application of Bayesian networks in prognostics for a new Integrated Vehicle Health Management concept. Expert Syst Appl 2012;39:6402–18.
[15] Liao L, Köttig K. Review of hybrid prognostics approaches for remaining useful life prediction of engineered systems, an application to battery life prediction. IEEE Trans Reliab 2014;63:191–207.
[16] Zaidan MA, Harrison RF, Mills AR, Fleming PJ. Bayesian hierarchical models for aerospace gas turbine engine prognostics. Expert Syst Appl 2015;42:539–53.
[17] Remy L, Alam A, Haddar N, Köster A, Marchal N. Growth of small cracks and prediction of lifetime in high-temperature alloys. Mater Sci Eng 2007;468-470:40–50.
[18] Sankararaman S, Ling Y, Mahadevan S. Uncertainty quantification and model validation of fatigue crack growth prediction. Eng Fract Mech 2011;78:1487–504.
[19] Prakash O, Samantaray AK, Bhattacharyya R. Model-based multi-component adaptive prognosis for hybrid dynamical systems. Control Eng Pract 2018;72:1–18.
[20] Feng Q, Chen Y, Sun B, Li S. An optimization method for condition based maintenance of aircraft fleet considering prognostics uncertainty. Sci World J 2014 430190. doi:10.1155/2014/430190.
[21] Heng A, Tan ACC, Mathew J, Montgomery N, Banjevic D, Jardine AKS. Intelligent condition-based prediction of machinery reliability. Mech Syst Sig Process 2009;23:1600–14.
[22] Sankararaman S, Daigle MJ, Goebel K. Uncertainty quantification in remaining useful life prediction using first-order reliability methods. IEEE Trans Reliab 2014;63:603–19.
[23] Iung B, Monnin M, Voisin A, Cocheteux P, Levrat E. Degradation state model-based prognosis for proactively maintaining product performance. CIRP Ann 2008;57:49–52.
[24] Liu Q, Dong M, Lv W, Genga X, Li Y. A novel method using adaptive hidden semi-Markov model for multi-sensor monitoring equipment health prognosis. Mech Syst Sig Process 2015;64-65:217–32.
[25] Medina-Oliva G, Weber P, Iung B. PRM-based patterns for knowledge formalisation of industrial systems to support maintenance strategies assessment. Reliab Eng Syst Saf 2013;116:38–56.
[26] Medina-Oliva G, Weber P, Iung B. Industrial system knowledge formalization to aid decision making in maintenance strategies assessment. Eng Appl Artif Intell 2015;37:343–60.
[27] Nguyen KA, Do P, Grall A. Multi-level predictive maintenance for multi-component systems. Reliab Eng Syst Saf 2015;144:83–94.
[28] Certa A, Hopps F, Inghilleri R, La Fata CM. A dempster-shafer theory-based approach to the failure mode, effects and criticality analysis (fmeca) under epistemic uncertainty: application to the propulsion system of a fishing vessel. Reliab Eng Syst Saf 2017;159:69–79.
[29] Muller A, Suhner MC, Iung B. Formalisation of a new prognosis model for supporting proactive maintenance implementation on industrial system. Reliab Eng Syst Saf 2008;93:234–53.
[30] Voisin A, Levrat E, Cocheteux P, Iung B. Generic prognosis model for proactive maintenance decision support: application to pre-industrial e-maintenance test bed. J Intell Manuf 2010;21:177–93.
[31] Desforges X, Dievart M, Archimede B. A prognostic function for complex systems to support production and maintenance co-operative planning based on an extension of object oriented Bayesian networks. Comput Ind 2017;86:34–51.
[32] Arnaiz A, Ferreiro S, Buderath M. New decision support system based on operational risk assessment to improve aircraft operability. Proc Inst Mech Eng, Part O 2010;224:137–47.
[33] Chaouqi M, Benhra J, Zakari A. Agile approach for joint scheduling of production and maintenance in flow shop. Int J Comput Appl 2012;59:29–36.
[34] Coudert T, Grabot B, Archimede B. Production/maintenance co-operative scheduling using multi-agents and fuzzy logic. Int J Prod Res 2002;40:4611–32.
[35] Sanmarti E, Espufia A, Puigjaner L. Batch production and preventive maintenance scheduling under equipment failure uncertainty. Comput Chem Eng 1997;21:1157–8.
[36] Weber P, Jouffe L. Complex system reliability modelling with dynamic object oriented Bayesian networks (DOOBN). Reliab Eng Syst Saf 2006;91:149–62.
[37] Koski T, Noble JM. Bayesian networks: an introduction. Chichester: John Wiley & Sons Inc.; 2009.
[38] Helton JC, Johnson JD, Oberkampf WL, Sallaberry CJ. Sensitivity analysis in conjunction with evidence theory representations of epistemic uncertainty. Reliab Eng Syst Saf 2006;91:1414–34.
[39] Shafer G. A mathematical theory of evidence. Princetown: Princetown University Press; 1976.
[40] Denoeux T, Ben Yaghlane A. Approximating the combination of belief functions using the fast Möbius transform in a coarsened frame. Int J Approximate Reasoning 2002;31:77–101.
[41] Ramasso E, Denoeux T. Making use of partial knowledge about hidden states in HMMs: an approach based on belief functions. IEEE Trans Fuzzy Syst 2014;22:395–405.
[42] Shah H, Hosder S, Winter T. Quantification of margins and mixed uncertainties using evidence theory and stochastic expansions. Reliab Eng Syst Saf 2015;138:59–72.
[43] Smets P. Belief functions: The disjunctive rule of combination and the generalized Bayesian theorem. Int J Approximate Reasoning 1993;9:1–35.
[44] Smets P, Kennes R. The transferable belief model. Artifi Intell 1994;66:191–234.
[45] Villeneuve E, Beler C, Peres F, Geneste L, Reubrez E. Decision-support methodology to assess risk in end-of-life management of complex systems. IEEE Syst J 2017;11:1579–88.
[46] Simon C, Weber P, Levrat E. Bayesian networks and evidence theory to model complex systems reliability. J Comput 2007;2:33–43.
[47] Simon C, Weber P, Evsukoff A. Bayesian networks inference algorithm to implement Dempster Shafer theory in reliability analysis. Reliab Eng Syst Saf 2008;93:950–63.
[48] Goupil P. AIRBUS state of the art and practices on FDI and FTC in flight control system. Control Eng Pract 2011;19:524–39.
[49] Kossiakoff A, Sweet WN, Seymour S, Biemer SM. Systems engineering principles and practice. 2nd ed. Hoboken: John Wiley & Sons Inc; 2011.
[50] Friedenthal S, Moore A, Steiner R. A practical guide to SysML, the systems modeling language. Amsterdam: Morgan Kaufmann OMG Press; 2009.
[51] Worn H, Langle T, Albert M, Kazi A, Brighenti A, Revuelta Seijo S, et al. Diamond: distributed multi-agent architecture for monitoring and diagnosis. Prod Plann Control 2004;15:189–200.
[52] Bauer M. Algorithms and decision making in the Dempster-Shafer theory of evidence – an empirical study. Int J Approximate Reasoning 1997;17:217–37.
[53] Bourouni K. Availability assessment of a reverse osmosis plant: comparison between reliability block diagram and fault tree analysis methods. Desalination 2013;313:66–76.
[54] Lee J, Ni J, Djurdjanovic D, Qiu H, Liao H. Intelligent prognostics tools and e-maintenance. Comput Ind 2006;57:476–89.
[55] Biteus J, Nybergb M, Friska E. An algorithm for computing the diagnoses with minimal cardinality in a distributed system. Eng Appl Artif Intell 2008;21:269–76.